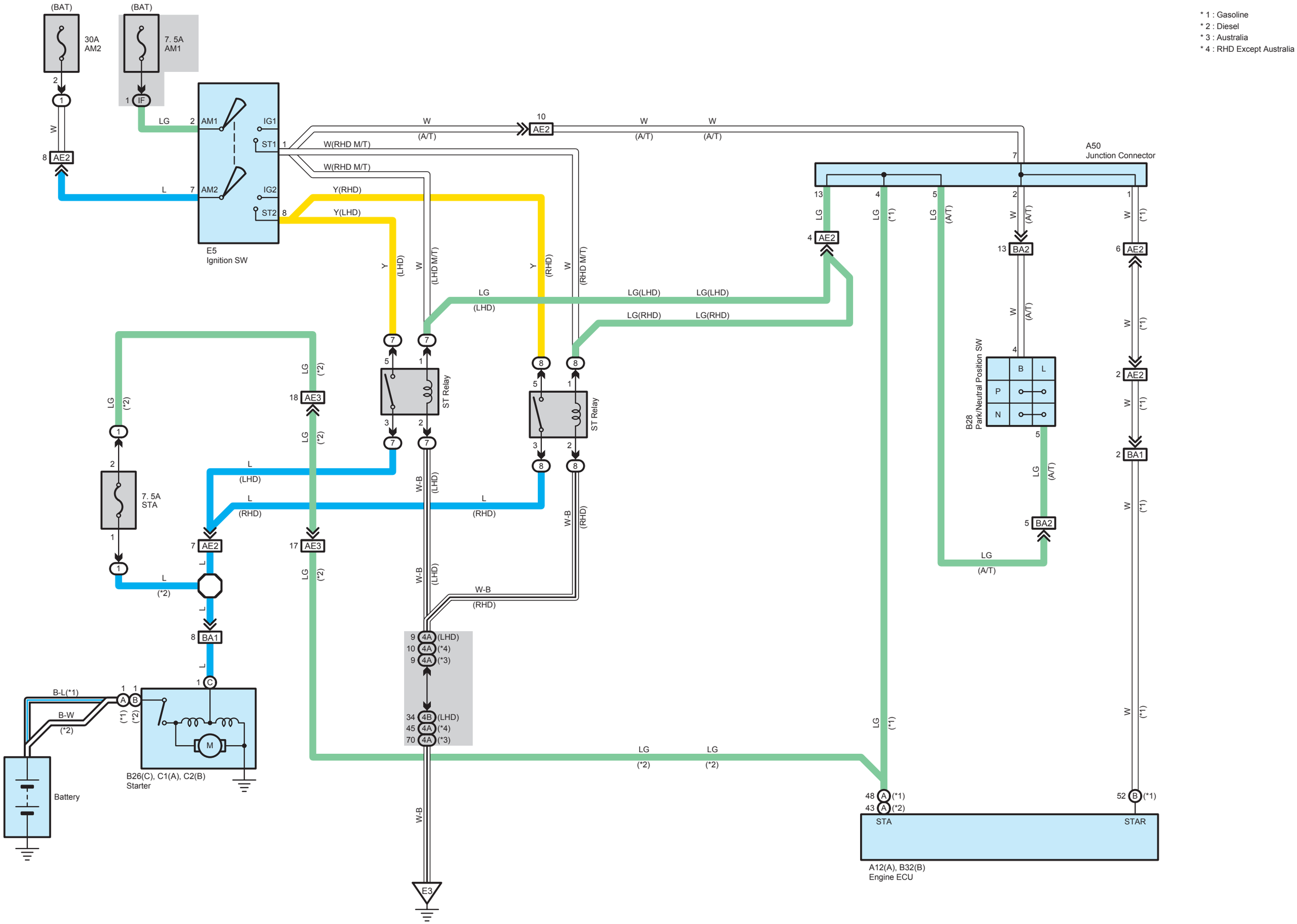
* 1 : Gasoline
* 2 : Diesel
* 3 : Australia
* 4 : RHD Except Australia
(BAT)
30A
AM2
(BAT)
7. 5A
AM1
E5
Ignition SW
AM1
AM2
IG1
ST1
IG2
ST2
A50
Junction Connector
B28
Park/Neutral Position SW
ST Relay
ST Relay
7. 5A
STA
B26(C), C1(A), C2(B)
Starter
Battery
A12(A), B32(B)
Engine ECU
STA
STAR
E3