MACHINE IDENTIFICATION

A. Frame Serial Number

The frame serial number is stamped on the right side of the steering head pipe.

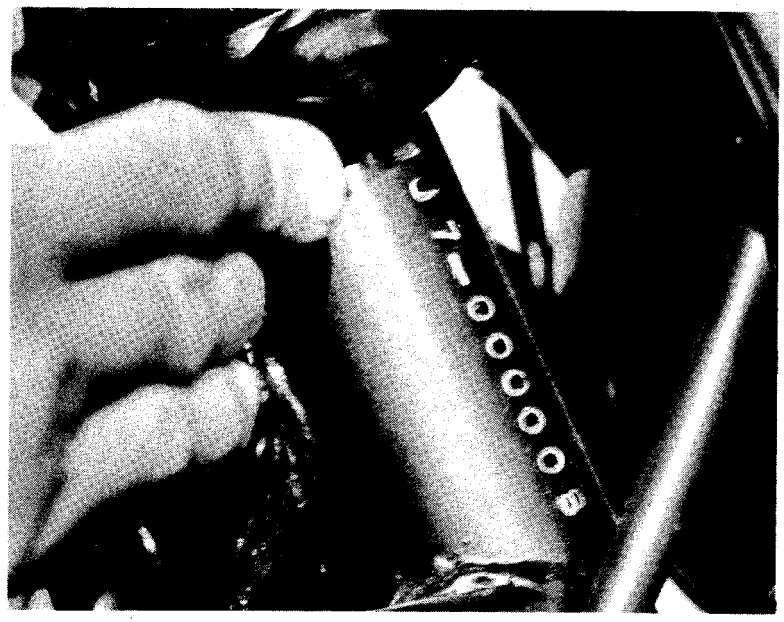

B. Engine Serial Number

The engine serial number is stamped on the elevated part of the right rear section of the engine.

NOTE: The first three digits of these numbers are for model identifications; the remaining digits are the unit production number. The frame and engine numbers are usually identical.

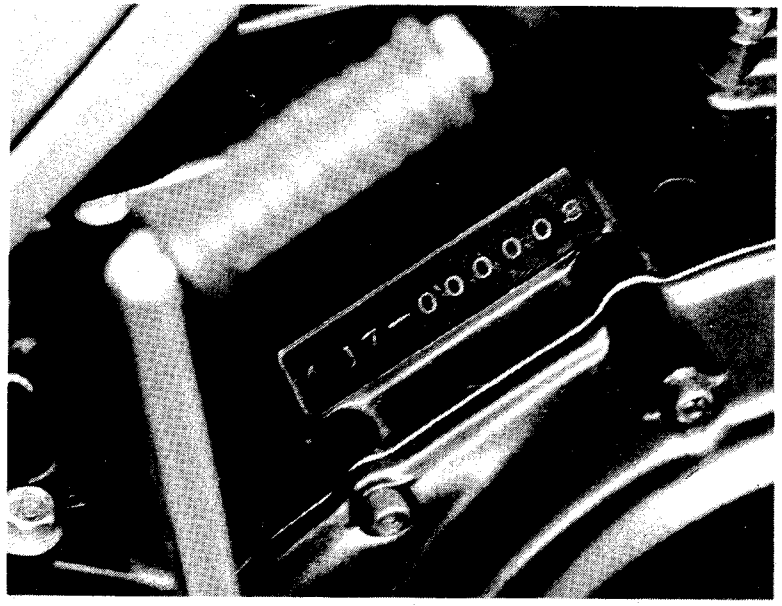

SPECIFICATIONS

A. GENERAL SPECIFICATIONS	
Basic color	Crystal Silver
Dimensions:	
Overall length	2180mm (85.8 in.)
Overall width	835mm (32.9 in.)
Overall height	1150mm (45.3 in.)
Seat height	810mm (31.9 in.)
Wheelbase	1465mm (57.7 in.)
Minimum ground clearance	145mm (5.7 in.)
Caster (steering head angle)	27°
Trail	110mm (4.3 in.)
Weight:	
Net	229 kg (505 lbs.)
Engine:	
Type	D.O.H.C., air-cooled, triple
Bore x stroke x cylinders	68mm x 68.6mm x 3
Displacement	747cc
Compression ratio	8.5: 1
Compression pressure (warm engine)	142 lbs in² (±14 lbs in²)
Lubrication:	
Lubrication system	Pressure lubricated, wet sump
Delivery pump type	Trocoid
Carburetion:	
Manufacture	Mikuni
Type, I.D. No., Quantity	BS34, constant velocity, 1J701, 3 pcs.
Rated venturi size	34mm
Air filter	Dry foam rubber
Ignition:	
Type	Battery/coil
Spark plug	NGK BP-7ES, Champion N-7Y
Charging	
Type	Three-phase, regulated alternator
Manufacture, I.D. No.	Hitachi LD120-02
Maximum output	14.5 Volt/18 amp
Battery type	12 volt 14 amp-hour
Battery dimensions	134 x 166 x 89mm
Regulator	Hitachi TL1Z-80
Rectifier	Stanley DE-4404, Silicon, full wave
Starting	Transmission coupled kick Mitsuba Electric SM-224C
Primary drive	
Type	Hy-Vo silent chain
Teeth, ratio	45/27 1.666
Clutch	Wet, multiple disc.

Transmission:			
Type	Constant mesh, 5-speed, drum shifter		
Teeth, ratio, overall 1st	32/13	2.461	13.285
2nd	27/17	1.588	8.636
3rd	26/20	1.300	7.069
4th	23/21	1.095	5.955
5th	22/23	0.956	5.201
Secondary Drive:			
Type	Shaft drive		
Transmission Output:			
Type, teeth, ratio	Spur gear, 34/32, 1.063		
Middle gear case			
Type, teeth, ratio	Bevel gear, 19/18, 1.056		
Final gear case			
Type, teeth, ratio	Bevel gear, 32/11, 2.909		
Chassis:			
Frame	Tubular steel double cradle		
Suspension:			
Front (type, travel)	Telescopic fork, 175mm (6.9 in.)		
Rear (type, travel)	Swing arm, 75mm (3.0 in.)		
Tires:			
Front	3.25 H 19 Bridgestone		
Rear	4.00 H 18 Bridgestone		
Brakes:			
Front	Dual hydraulic disc		
Rear	Single hydraulic disc		
Fuel tank	17L.(4.5 US gal.) Regular leaded or unleaded		
Wheels:			
Front	1.85 x 19 Cast Aluminum		
Rear	2.15 x 18 Cast Aluminum		

B. MAINTENANCE SPECIFICATIONS

1. Engine

Engine Oil Capacity	
Dry	3500cc (3.7 Us qt.)
Oil and filter change	3200cc (3.4 US qt.)
Oil change	2800cc (3.0 US qt.)
Recommended lubricant:	
If temperature does not go below 5°C (40°F)	SAE 20W40 SE motor oil
If temperature does not go above 15°C (60°F)	SAE 10W30 SE motor oil

Middle gear case capacity:	375cc (13 oz.)
Final Gear case capacity	300cc (100 oz.)
Recommended lubricant	
If temperature does not go below 5°C (40°F)	SAE 90 Hypoid gear oil, GL-4
If temperature does not go above 15°C (60°F)	SAE 80 Hypoid gear oil, **GL-4**
All weather	SAE 80W90 Hypoid gear oil, GL-4
Cranking pressure (at sea level)	10 ± 1 kg/cm² (142 ± 14 psi)
Maximum difference between cylinders	1.0 kg/cm² (14 psi)

Camshafts

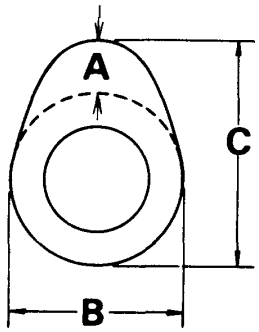

Dimensions		Standard size	Wear limit
Intake	A	8.518mm	
	B	28.285 ± 0.05mm	28.13mm
	C	36.803 ± 0.05mm	36.75mm
Exhaust	A	8.018mmm	----------
	B	28.285 ± 0.05mm	28.13mm
	C	36.303 ± 0.05mm	36.15mm

Camshaft bearing surface diameter	24.97~24.98mm (0.9830~0.9835 in.)
Camshaft-to-cap clearance:	
Standard	.020~.054mm (.0008~.002 in.)
Maximum	.160mm (.006in.)
Camshaft runout limit	0.1 mm (.004 in)

Valves

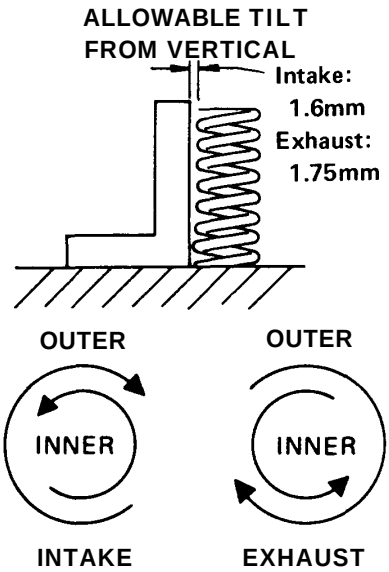

	INNER	OUTER
	INTAKE/EXHAUST	INTAKE/EXHAUST
Free length	35.6mm	39.9mm
Spring rate (kg/mm)	K1 1.84 K2 2.36	K1 3.32 K2 4.18
Installed length (valve closed)	31.5mm	34.5mm
Installed pressure (valve closed)	7.5 ± 0.75kg	17.5 ± 1.2kg
Compressed length (valve open)	23.0mm	26.0mm
Wire diameter	2.8mm	3.9mm
Number of windings	7.75	6.4
Winding O.D.	15 +0.3mm 0	21.6 0 − 0.3mm

Valve stem run-out maximum	.03mm (.0012 in.)
Valve seat width standard/maximum	1.3mm (.050 in.) / 2.0mm (.080 in.)

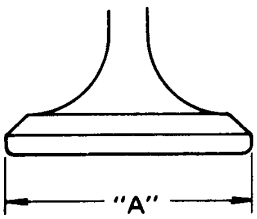

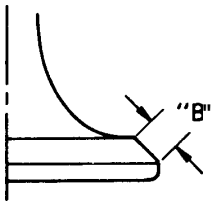

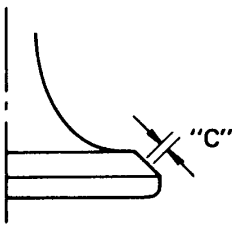

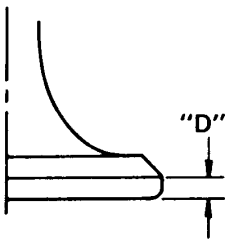

INTAKE

Clearance (Cold engine)	0.16~0.20mm
"A" head diameter	36 + 0.2 / 0mm
"B" face width	2.26 ± 0.57mm
"C" seat width	1.3 ±0.15mm
"D" margin thickness	1.2 ± 0.2mm
Stem diameter (O.D.)	7 + .010mm / -.025mm
Guide diameter (I.D.)	7 + .019mm / -.010mm
Stem-to-guide clearance	0.020~0.041mm

EXHAUST

Clearance (Cold engine)	0.21~0.25mm
"A" head diameter	31 + 0.2mm / 0mm
"B" face width	2.26 ± 0.57mm
"C" seat width	1.3 ± 0.15mm
"D" margin thickness	1.2 ± 0.2mm
Stem diameter (O.D.)	7 +.025mm / -.040 mm
Guide diameter (I.D.)	7 + .019mm / –.010mm
Stem-to-guide clearance	0.035~0.059mm

Cylinder and Piston	
Cylinder material	Aluminum
Cylinder liner	Pressed in; special cast iron
Standard bore sizehtandard	68.00~68.02mm / (2.677~2.678 in.)
maximum	68.10mm (2.681)
Cylinder taper limit	0.05mm (.002 in.)
Cylinder out-of-round limit	0.01mm (.0004 in.)
Piston clearancehtandard	0.050~0.055mm / (.0020~.0022 in.)
maximum	0.1mm (.004 in.)

Piston Rings	Top	2nd	Oil
Design			
End gap (installed)	0.2~0.4mm	0.2~0.4mm	0.2~0.9mm
Side clearance	0.04-0.08mm	0.03-0.07mm	

Crankshaft and Connecting Rods: Main bearing oil clearance Rod bearing oil clearance Main journal run-out (maximun)	 0.022~0.044mm (.0009~.0017 in.) 0.032~0.054mm (.0013~.0021 in.) 0.03mm (.0012 in.)
Oil Pump Housing-to-outer rotor clearance Outer rotor-to-inner rotor clearance	 ,090~.015mm (.0035~.0059 in.) .03 ~.09mm (.0011~.0035 in.)
Clutch Friction plate thickness standard minimum Clutch plate warp maximum Clutch spring length standard minimum Clutch push rod run-out maximum Clutch lever freeplay (end of lever)	 3.0mm (0.12 in.) 2.8mm (0.11 in.) 0.05mm (.002 in) 42.8mm (1.685 in.) 41.5mm (1.634 in.) 0.4mm (.016in.) 13~26mm (0.5~1.0 in)
Transmission shaft run-out maximum	.08mm (.001 in.)
Middle gear case lash	0.1 ~0.2mm (.004~.008 in.)

2. Carburetion

Manufacturer	Mikuni	Float level	26.5 ±2.5mm (from gasket surface)
Model, I. D. No.	BS34,1J701	Pilot screw	2¼ turns
Main jet	No. 145	Air jet, Main	1.0mm
Needle jet	Y-2	Air jet, Pilot	1.6mm
Pilot jet	No. 17.5	Throttle valve	No. 140
Starter jet	No. 45	Inlet valve size	2.0mm
Jet needles / Clip position	4H11/3	Engine idle speed	1050 ~ 1150 r.p.m.

3. Chassis	
Wheels and Tires	
Rim run-out, vertical	2.0mm (.080 in.)
Rim run-out, horizontal	l.0mm (.040 in.)
Tire pressure, front, normal riding	1.8 kg/cm2 (26 p.s.i.)
High speed or with passenger	2.0 kg/cm2 (28 p.s.i.)
Tire pressure, rear, normal riding	2.0 kg/cm2 (28 p.s.i.)
High speed or with passenger	2.3 kg/cm2 (33 p.s.i.)
Brakes	
Recommended fluid	DOT No. 3
Minimum boiling point	240°C (464°F)
Pad thickness wear limit	5.5mm (0.18 in.)
Brake disc maximum deflection	0.15mm (.006 in.)
Brake disc minimum thickness	6.5mm (0.26 in.)
Front brake freeplay (end of lever)	5.0~10.0mm (0.2~0.4 in.)
Rear brake freeplay (end of pedal)	5.0~10.0mm (0.2~0.4 in.)
Front forks	
Spring (upper) free length	55.8mm (2.2 in.)
preload length	50.8mm (2.0 in.)
Spring (lower) free length	448.3mm (17.65 in.)
preload length	423.3mm (16.67 in.)
Spring rate (0~100mm travel)	0.5 kg/mm (28 lbs/in.)
(100~175mm travel)	0.6 kg/mm (33.6 lbs./in.)
Fork oil capacity (each side)	170cc (5.75 US fl. oz.)
Rear shock absorbers	
Spring free length	253mm (9.95 in.)
Spring preload length	228 mm (9.0 in.)
Spring rate (0~45mm travel)	1.9 kg/mm (106 lbs./in.)
(45~75mm travel)	2.6 kg/mm (145 lbs./in.)

Ignition timing retarded	10° @ 1100 rpm
advanced	38.5° ± 1.5°@ 2,900 rpm
advance starts	1550 + 200 rpm 0
Spark plug	NGK BP-7ES or Champion N-7Y
Electrode gap	0.7~ 0.8mm (.028~.032 in)
Spark plug cap resistance	5.0 K ohms
Contact point gap	0.3~0.4mm (.012 ~.016 in)
Spring tension	750 ± 100g (26.5 ± 3.5 oz)
Condenser capacity	0.22µF ± 10%
Insulation resistance	10 M ohms or more
Ignition coil type	Hitachi CM11-52A
Spark gap 6V	6mm @ 100 rpm
12V	7mm @ 5,000 rpm
Primary resistance (20°C)	4.0 ± 0.4 ohms
Secondary resistance (20°C)	11.0 ± 1.1K ohms

Starter motor type	Mitsuba SM-224C
Armature coil resistance (2O°C)	0.007 ohms
Field coil resistance (2O°C)	0.01 ohms
Brush length standard	12.5mm (0.5 in)
minimum	5.5mm (0.22 in)
Brush spring pressure	620 ± 60g (22.0 ± 2.0 oz)
Armature mica undercut	0.5 ~ 0.8mm (0.02 ~ 0.03 in)
Battery type	Yuasa YB 14L
Charging rate	1.4 amps for 10 hours
Generator type	Hitachi Ld 120-02
No load voltage	14.5 ± 0.5V
Field (inner) coil resistance(20°C)	4.04 ± 0.4 ohms
Stator (outer) coil resistance (20°C)	0.48 ± 0.05 ohms
Regulator type	Hitachi TLIZ-80
Regulated voltage	14.5 ± 0.5V
Core gap	0.6 ~ 1 .0mm (.024 ~.040 in)
Yoke gap	0.9mm (.035 in)
Point gap	0.3 ~ 0.4mm (.012 ~.016 in)
Starter relay switch	Hitachi A104-70
Cut-in voltage	6.5 V
Winding resistance (20°C)	3.5 ohms
Lighting	
Headlight	Sealed beam 12V50/40W
Taillight/stoplight	12V 8/27W (two bulbs)
License light	12v 8W
Flasher light	12V 27W (four bulbs)
Flasher pilot light	12V 3.4W (two bulbs)
Meter lights	12V 3.4W (two bulbs)
High beam indicator light	12v 3.4w
Oil pressure warning light	12v 3.4w
Neutral light	12v 3.4w

C. Torque Specifications

Engine	
Spark plug	1.5 ~ 2.5 m-kg (11.0 ~18.0 ft-lbs.)
Cam cap nut	0.8 ~ 1.0 m-kg (6.0 ~ 7.0 ft-lbs.)
Rod cap	3.8 m-kg (27 ft-lbs.)
Starter clutch bolt	2.8 ~ 3.2 m-kg (20 ~ 23 ft-lbs.)
Shift cam locating bolt	1.3 ~ 2.1 m-kg (9 ~ 15 ft-lbs.)
Detent assembly	4.0 ~ 4.5 m-kg (29 ~ 32 ft-lbs.)
Transmission bearing caps	1.8 ~ 2.2 m-kg (13 ~ 16 ft-lbs.)
Crankcase bolts 8mm	2.0 rn-kg (14 ft-lbs.)
10mm	3.7 m-kg (27 ft-lbs.)
Clutch holding nut	8 m-kg (58 ft-lbs)
Clutch spring screws	0.8 ~ 1.0 m-kg (6.0 ~ 7.0 ft-lbs.)
Middle gear case mounting screws	2.0 ~ 2.5 m-kg (14 ~ 18 ft-lbs.)
Rotor holding bolt	3.0 ~ 4.0 m-kg (22 ~ 29 ft-lbs.)
Bearing housing bolt	2.0 ~ 2.4 m-kg (14 ~ 17 ft-lbs.)
Oil pipe union bolt	2.0 ~ 2.2 m-kg (14 ~ 16 ft-lbs.)
Oil pump drive gear nut	8.0 ~ 12.0 m-kg (58 ~ 87 ft-lbs.)
Crankshaft turning nut	1.5 ~ 2.9 m-kg (11 ~ 21 ft-lbs.)
Cylinder head 8mm	2.0 m-kg (14 ft-lbs.)
10mm	3.5 m-kg (25 ft-lbs.)
Cylinder holding nuts	2.0 m-kg (14 ft-lbs.)
Camshaft cap nuts	1.0 m-kg (7 ft-lbs.)
Engine mounting bolts 10mm	5.0 ~ 6.0 m-kg (36 ~ 43 ft-lbs.)
12mm	8.0 ~ 11.0 m-kg (58 ~ 80 ft-lbs.)
Engine oil drain plug	3.9 ~ 4.7 m-kg (28 ~ 34 ft-lbs.)
Oil filter mounting bolt	3.0 ~ 3.4 m-kg (22 ~ 25 ft-lbs.)
Middle gear drain plug	3.9 ~ 4.7 m-kg (28 ~ 34 ft-lbs.)
Chassis	
Front axle nut	7.0 ~ 10.0 m-kg (50 ~ 72 ft-lbs.)
Front axle holder nuts	1.3 ~ 2.3 m-kg (9 ~ 17 ft-lbs.)
Rear axle nut	12.0 ~ 18.0 m-kg (87 ~ 130 ft-lbs.)
Rear axle pinch bolt	0.45 ~ 0.75 m-kg (3.0 ~ 5.0 ft-lbs.)
Brakes	
Caliper support bolt	1.5 ~ 2.0 m-kg (11 ~ 15 ft-lbs.)
Caliper mounting bolt	4.5 ~ 5.0 m-kg (28 ~ 35 ft-lbs.)
Brake hose union bolt	2.3 ~ 2.8 m-kg (16 ~ 20 ft-lbs.)
Disc mounting bolt	1.7 ~ 2.2 m-kg (12 ~ 16 ft-lbs.)
Front fork pinch bolt	1.3 ~ 2.3 m-kg (9 ~ 17 ft-lbs.)
Steering stem top bolt	6.6 ~ 10.5 m-kg (48 ~ 76 ft-lbs.)
Swing arm pivot lock nut	8.0 ~ 10.0 m-kg (58 ~ 72 ft-lbs.)
Rear shock absorber nut	2.3 ~ 3.7 m-kg (20 ~ 27 ft-lbs.)

General Torque Specifications

This chart specifies torque for standard fasteners with standard I.S.O. pitch threads. Torque specifications for special components or assemblies are included in the applicable sections of this book.

To avoid warpage, tighten multi-fastener assemblies in a criss-cross fashion, in progressive stages, until full torque is reached. Unless otherwise specified, torque specifications call for clean, dry threads. Components should be at room temperature.

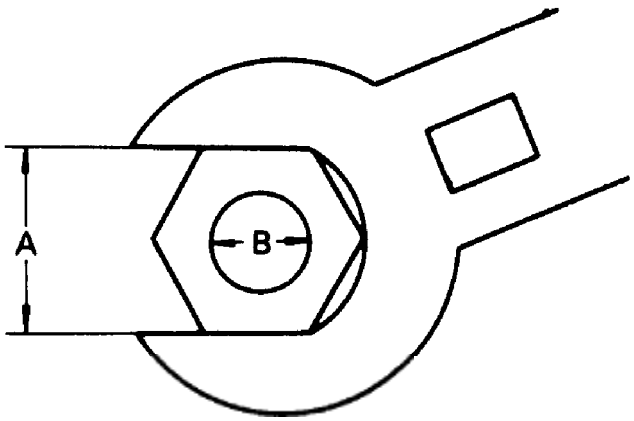

A. Distance across flats

B. Outside thread diameter

A	B	TORQUE SPECIFICATION		
		m-kg	ft-lb	in-lb
10mm	6mm	1.0	7.2	85
12mm	8mm	2.0	15	175
14mm	10mm	3.5 - 4.0	25 - 29	300 - 350
17mm	12mm	4.0 - 4.5	29 - 33	350 - 400
19mm	14mm	4.5 - 5.0	33 - 36	400 - 440
22mm	16mm	5.5 - 6.5	41 - 49	480 - 570
24mm	18mm	5.8 - 7.0	42 - 50	500 - 600
27mm	20mm	7.0 - 8.3	50 - 60	600 - 700
Spark plug		2.5 - 3.0	20 - 22	230 - 250

SPECIAL TOOLS

Valve guide remover

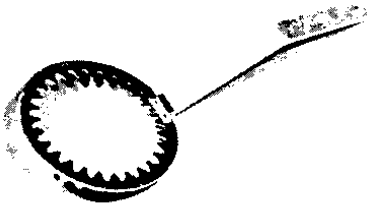

Clutch holding tool

Final drive gear holding tool

Valve guide installer

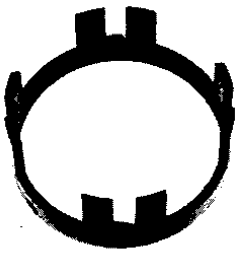

Clutch plate installation tool

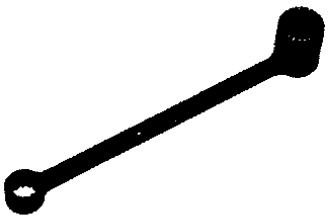

Middle and final gear holding tool

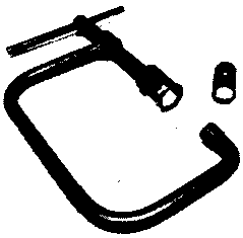

Valve spring compressor

Clutch lock nut wrench

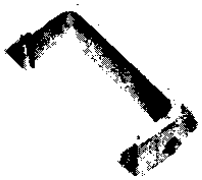

Damper special tool

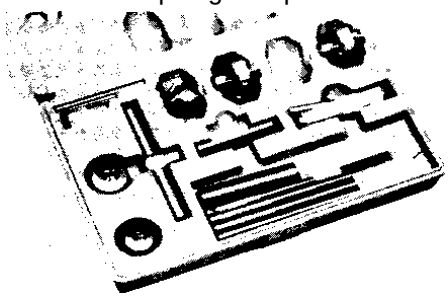

Valve seat cutter set

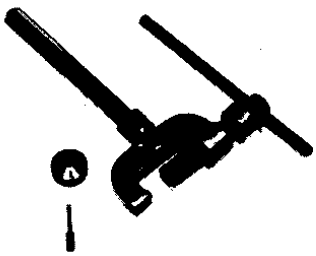

Cam chain cutter

Rotor puller

Tappet adjusting tool

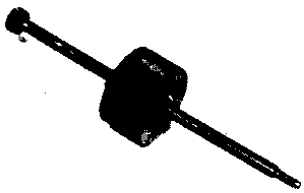

Slide hammer

Rotor holding tool

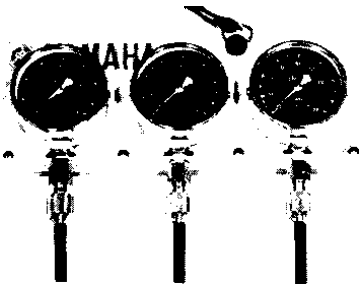

Vacuum gauge

Gear lash measurement tool
(middle gear)

Gear lash measurement tool
(final gear)

2-3 ENGINE

A. Carburetor

1. Idle mixture

The idle mixture is set at the factory by the use of special equipment. No attempt should be made to change this adjustment by the dealer.

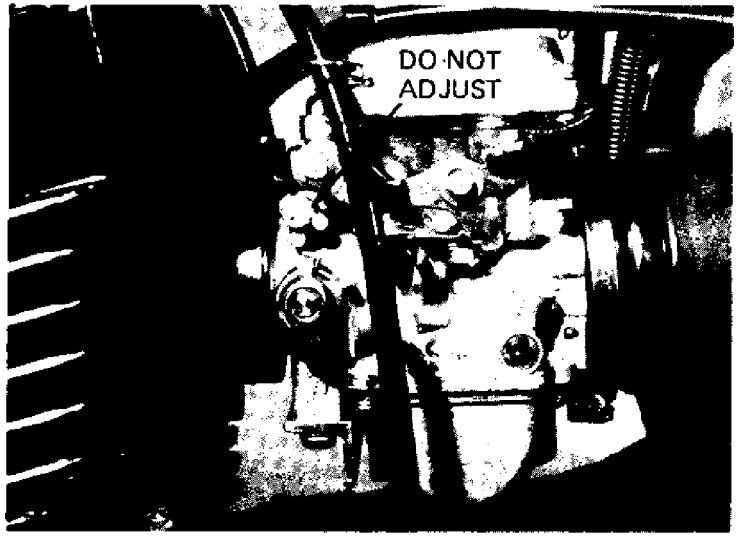

2. Synchronization

NOTE: Ignition timing and valve clearances must be set properly before synchronizing carburetors.

Procedure

a. Turn fuel petcock to "on". Remove vacuum pipes from carburetor manifolds (left and right).

b. Remove cap from center carburetor manifold.

c. Connect vacuum gauges on carburetor rnanifolds as shown.

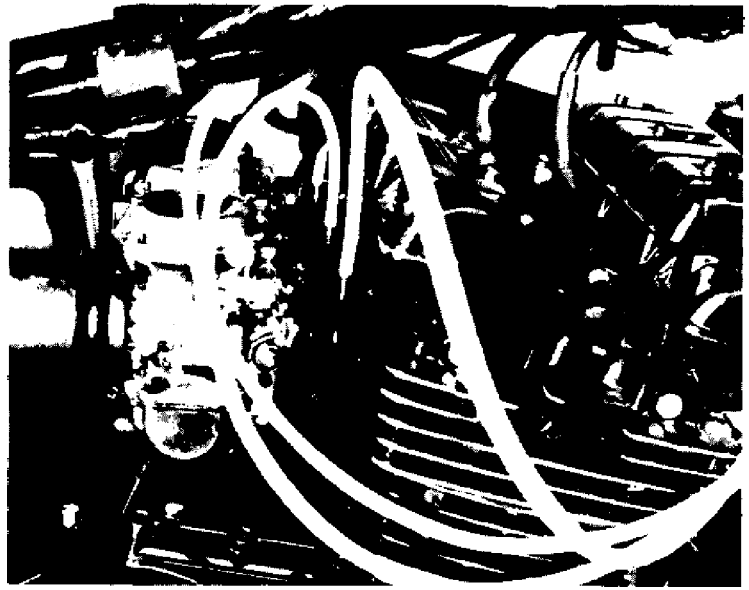

d. Turn petcocks to "prime" position.

e. Start motorcycle and allow it to warm up for **2-3** minutes. The warm-up is complete when engine responds normally to threttle opening.

f. Adjust damping valve on each vacuum gauge until the needle flutters only slightly. The gauge needles must respond quickly to rapid opening of the throttle.

g. Each gauge will indicate the same reading if the carburetors are synchronized. The left and right carburetors are to be synchronized to the center carburetor, which has no synchronizing screw. Turn the left carburetor synchronizing screw until the gauge reading is the same as for the center carburetor. Repeat for the right carburetor.

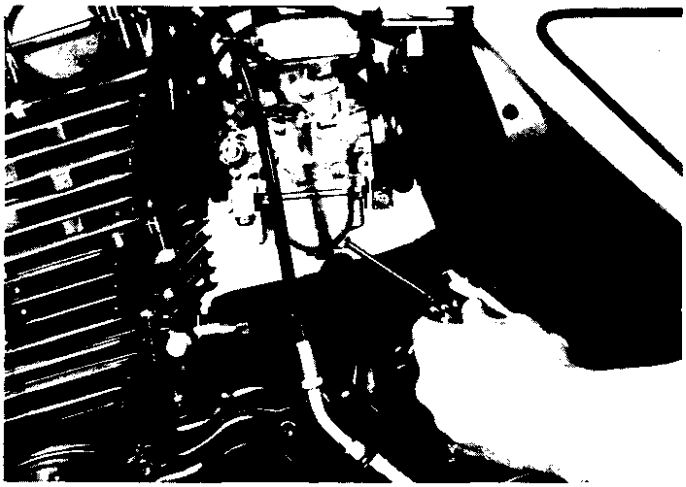

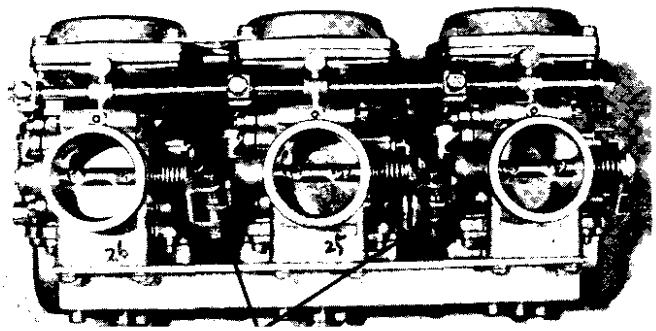

SYNCHRONIZING SCREWS

3. Idle **speed** adjustment.

NOTE: Carburetors must be synchronized before setting final idle speed. The idle speed adjustment is made by turning only one throttle stop screw.

a. The engine must be warmed up before setting idle speed.

b. Set engine idle speed by turning the throttle stop screw in (to increase engine speed) or out (to decrease speed).

Standard Idle RPM
1,050 - **1,1**50rpm

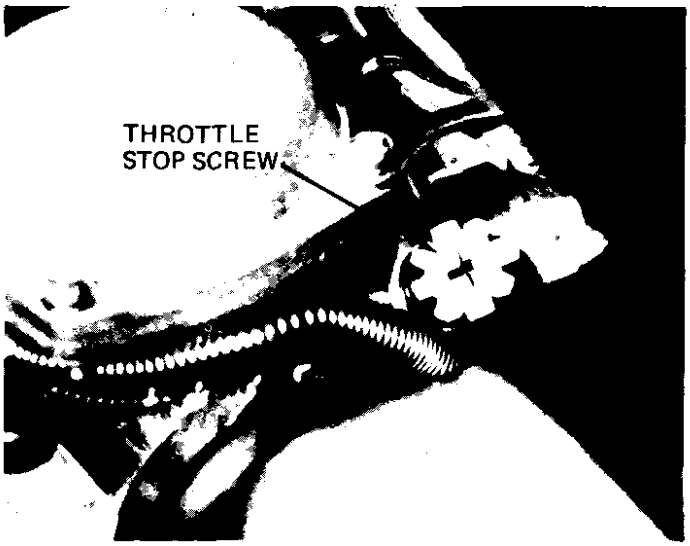

B. Air Filter

1. Removal

a. Lift the seat and remove the air filter case cap by removing the pan head screws **(2).**

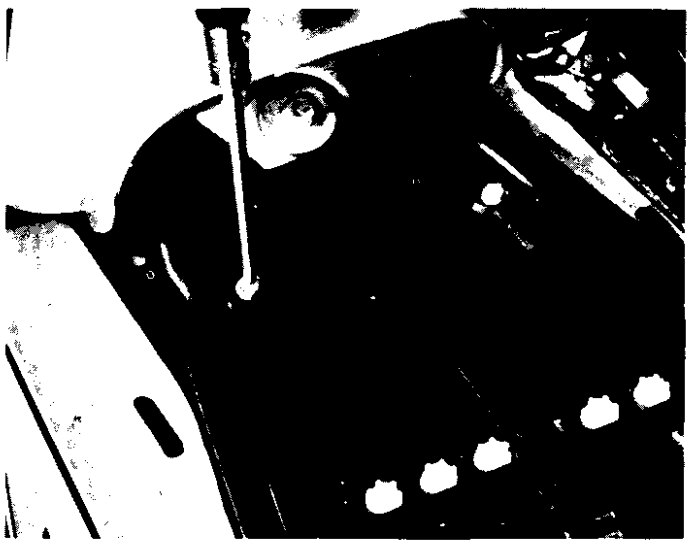

b. Pull out the element.

2. Cleaning method

a. Tap the element lightly to remove most of the dust and dirt; then blow out the remaining dirt with compressed air through the inner surface of the element. If element is damaged, replace.

b. Reassemble by reversing the removal procedure. Check whether the element is seated completely against the case.

c. The air filter element should be cleaned once a month or every 1,600km (1,000 miles). It should be cleaned more often if the machine is operated in extremely dusty areas.

CAUTION: The engine should never be run without the air cleaner element installed. **Excessive** oil contamination and engine wear **may result.**

C. Engine/Transmission Oil

1. Oil level measurement

a. To check the level, warm the engine up for several minutes. Stop the engine. With the engine stopped, screw the dip stick completely out and then rest the stick in the hole.

NOTE: When checking engine oil level with the dip stick, let the unscrewed dip stick rest on the case threads. Be sure the engine is stopped and the machine is positioned straight up and on both wheels.

b. The dip stick has a Minimum and a Maximum mark. The oil level should be between the two. If the level is low, add sufficient oil to raise it to the proper level.

2. Engine/Transmission oil and oil filter replacement

a. Start the engine. Allow it to warm up for minutes. Stop the engine.

b. Place an oil pan under the engine and remove the oil filler cap.

c. Remove the drain plug and drain the oil.

d. Remove the oil filter bolt and filter element.

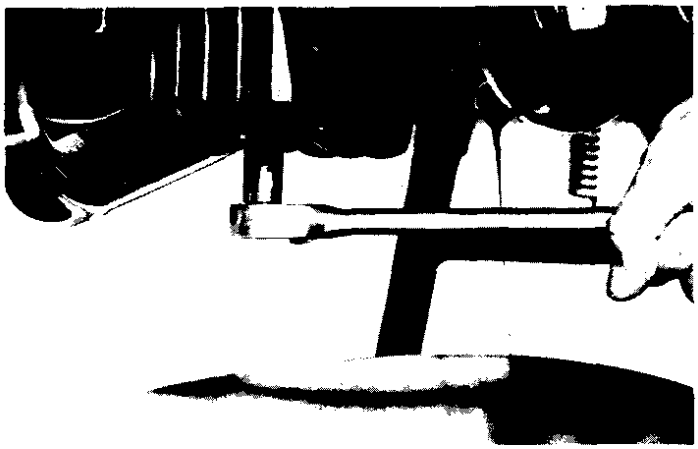

e. Reinstall the drain plug (make sure it is tight).

Drain plug torque: 4.0 ~ 4.5m-kg (28.9-32.5ft-lb)

f. Install the oil filter element and cover. Tighten the oil filter bolt.

NOTE: Make sure the "O' ring is positioned properly.

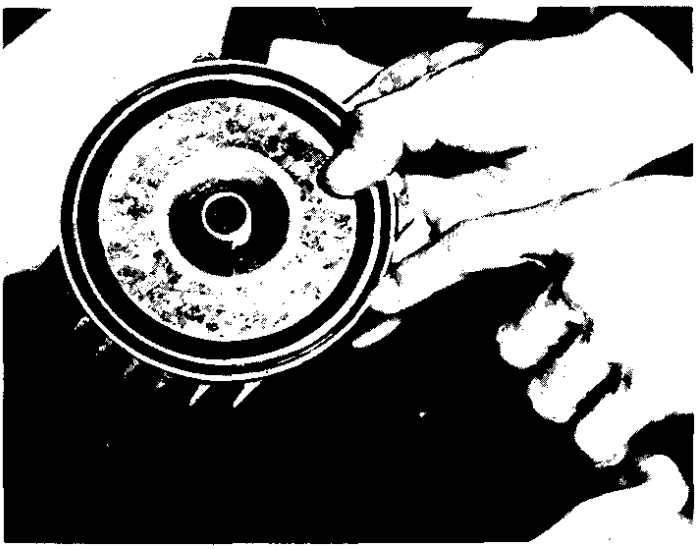

g. Add oil through the dip stick hole.

Oil quantity:	Periodic Oil Change 2.8 liter (3 US qt) With oil filter change: 3.2 liter (3.4 US qt)
Recommended oil:	except in cold weather Yamalube 4-cycle or SAE 20W40 "SE" (see page 8)

h. After replacement of engine oil, and/or oil filter, be sure to check the oil pressure and oil leakage. The oil pressure indicator light should go off after the engine is started.

CAUTION: If the "Oil" indicator light remains on, immediately stop the engine. Refer to lubrication information in *Sec.* 3-5 for corrective action.

D. Middle Gear/Final Gear Oil

1. Oil level measurement

a. Place the machine on a level surface and place it on the center stand. The engine should be cool (at atmospheric temperature). Allow 2 minutes for oil to drain to bottom of cases.

b. Remove the oil filler cap. Check the oil level with level gauge (from tool kit) as shown. The correct oil level is between the two marks on each end of the level gauge. Use end of gauge marked "REAR" for measuring the rear (final) gear case. Use the end marked measuring the middle gear case.

NOTE: Middle gear and final gear oil can be checked with same level gauge, which is in the owners tool kit.

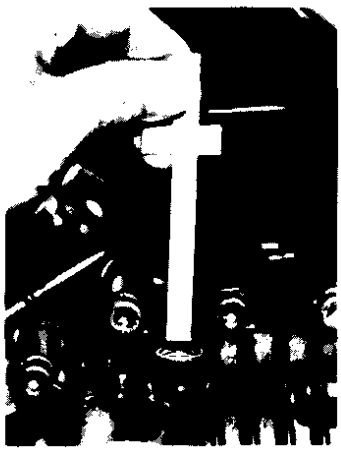

CAUTION: Take care not to allow foreign material to enter the middle and/or final aear case.

2. Gear oil replacement

a. Place an oil pan under the transmission for the middle gear and under the final gear case.

b. Remove the middle and/or final gear oil filler cap(s) and the drain plug(s), and drain the oil.

WARNING: When draining or filling, take care not to allow foreign material to enter the middle andlor final gear case. **Do** not allow **the** gear oil **to** contact the tire and wheel.

c. Reinstall the middle and/or final drain plug(s).

d. Fill the gear case(s) up to specified level.

Oil Capacity:
Middle gear case: 375cc (12.7 US. fl 02)
Final gear case: 300cc (10.0 U.S. fl 02)
Recommended oil: *(see page 8)*

e. Reinstall the filler cap(s) securely.

NOTE: After initial 250 mile oil change, it is normally not necessary to change middle and final gear oil more frequently than the indicated service interval of 6,000 miles.

E. Clutch Adjustment

This model has a clutch cable length adjustor and a clutch mechanism adjustor. The cable length adjustor5 are used to take up slack from cable stretch and to provide sufficient free play for proper clutch operation under various operating conditions. The clutch mechanism adjustor is used to provide the correct amount of clutch "throw" for proper disengagement. Normally, once the mechanism is properly adjusted, the only adjustment required is maintenance of free play at the clutch handle lever.

1. Free play adjustment

Loosen either the handle lever adjustor lock nut or the cable length adjustor lock nut. Next, turn the length adjustor either in or out until proper lever free play is achieved.

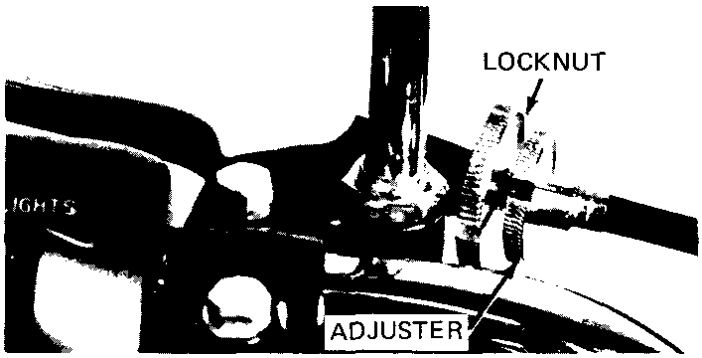

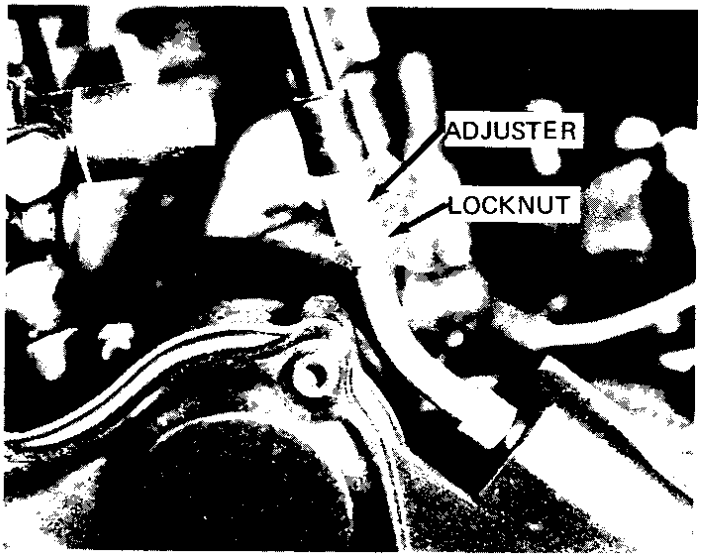

2. Mechanism adjustment

The second adjustment is located behind the adjusting cover. Removing the cover will expose the adjusting set screw and lock nut. Loosen the lock nut and rotate the set screw in until it lightly seats against a clutch push rod that works with the set screw to operate the clutch. Back the set screw out ¼ turn and tighten the lock nut. This adjustment must be checked because heat and clutch wear will affect this **free** play, possibly enough to cause improper clutch operation. Recheck clutch cable adjustment at handlebar after adjusting.

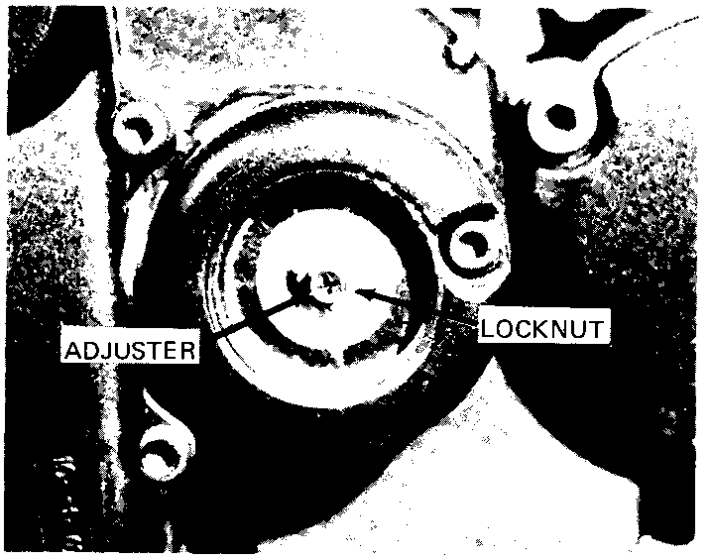

F. Cam Chain Adjustment

The cam chain becomesstretched with **use,** resulting in improper valve timing and engine noise. To prevent this the cam chain tensioner must be adjusted regularly.

1. Remove the breaker cover

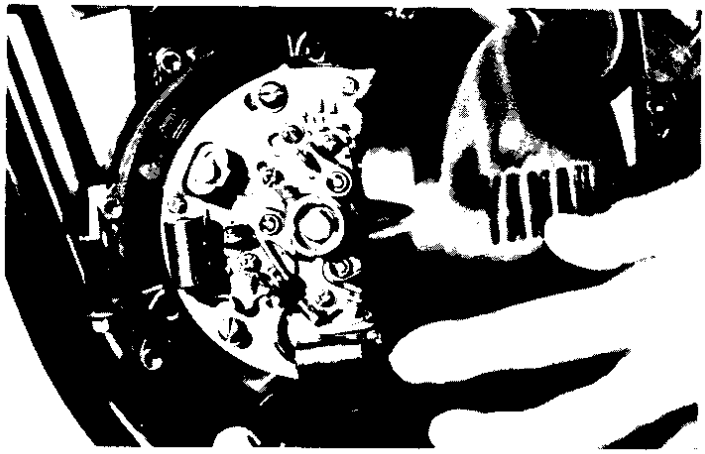

2. Remove the cam chain tensioner cover.

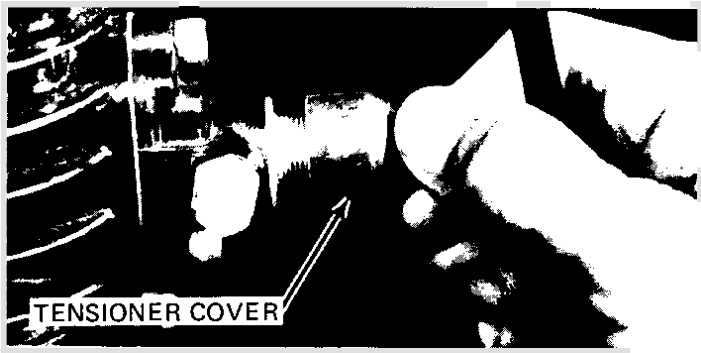

Loosen the tensioner stopper bolt lock nut and then loosen the stopper bolt.

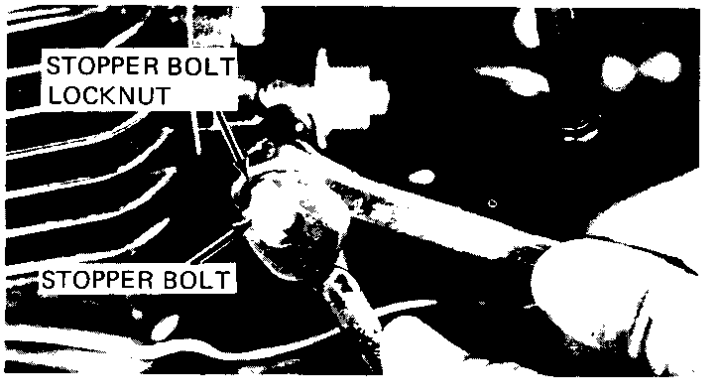

4. Slowly rotate the crankshaft counterclockwise several turns. When the tensioner gets deepest into the tensioner holder, tighten the stopper bolt and secure it with the lock nut.

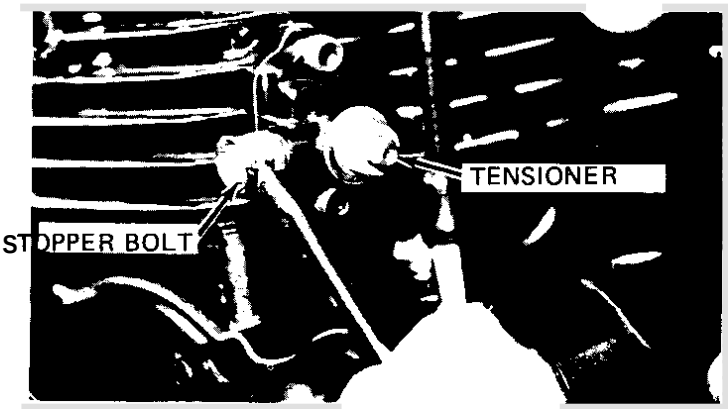

5. Reinstall the chain tensioner cap and the contact breaker cover.

G. Valve Clearance Adjustment

NOTE: Valve clearance must be measured with the engine at room temperature.

1. Remove gas tank.

2. Remove air scoop on cylinder head

3. Remove cylinder head cover and breaker point cover. Care should be taken to not scratch or damage gasket sealing surfaces.

4. Turn crankshaft with nut on left end ofcrankshaft to turn cams. The proper position of the cam when measuring valve clearance is with the cam lobe directly opposite the valve lifter.

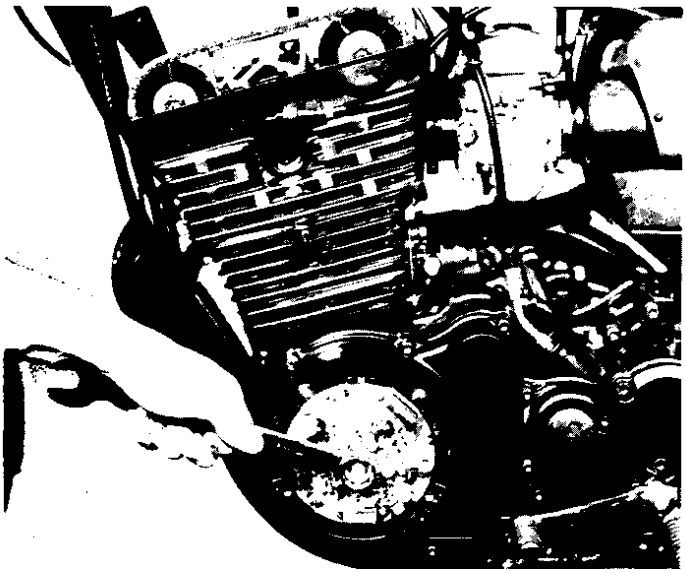

5. Insert a feeler gauge between the valve lifter and the cam heel.

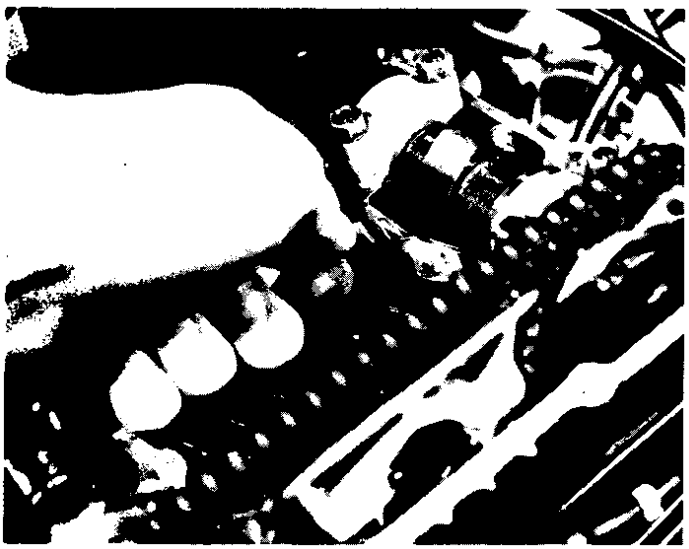

Exhaust valve clearance (cold) 0.21 - 0.25mm (.008 -.010")
Intake valve clearance (cold) 0.16 - 0.20mm (.006 - ,008")

Adjustment

Valve clearance is adjusted by replacing the adjusting pad on the top of the valve lifter. Adjusting pads are available in 25 thicknesses ranging from No. 200 (2.00mm) to No. 320(3.20mm) in steps of 0.05mm. The thickness of each pad is marked on the pad face that contacts the valve lifter (notthe cam). Adjustment of valve clearance is accomplished as follows:

1. Determine valve clearance (feeler gauge measurement.

2. Remove adjusting pad and note number.

3. Select proper pad from appropriate chart (intake or exhaust chart).

4. Install new pad and check installed clearance.

Procedure

1. Measure valve clearance. If clearance is incorrect, record the measured amount of clearance. This must be measured carefully.

2. There is a slot in the valve lifter. This slot must be positioned opposite the blade of the tappet adjusting tool before the tool is installed.

3. Turn the cam until the lobe fully depresses the valve lifter and opens the valve. Install the tappet adjusting tool as shown to hold the lifter in this depressed position.

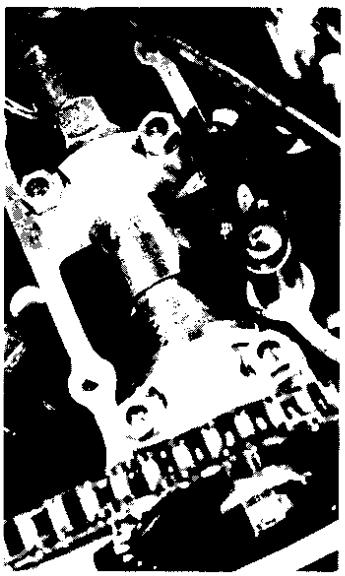

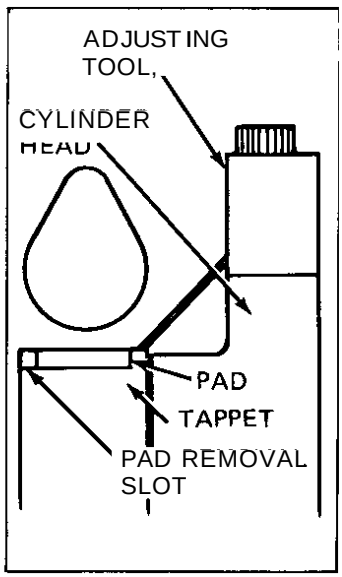

NOTE: The tappet adjusting tool is fastened to the cylinder head using one **(1)** allen screw such as one used to install the cylinder head cover. Make sure that the tool contacts the lifter only, and not the pad.

CAUTION: If the cam lobe touches the tappet adjusting tool, the stress may fracture the cylinder head. **DO** NOT ALLOW THE CAM TO CONTACT THE TAPPET ADJUSTING TOOL.

4. Carefully rotate the cam so that the pad can be removed. To avoid cam touching adjusting tool, turn cams as follows: (view from left side of machine)

   Intake: Carefully rotate CLOCKWISE.
   Exhaust: Carefully rotate COUNTERCLOCKWISE.

5. Remove the pad from the lifter. There is a slot in the lifter. Use a small screwdriver or other blade and a magnetic rod to remove the pad. Note the number on the pad.

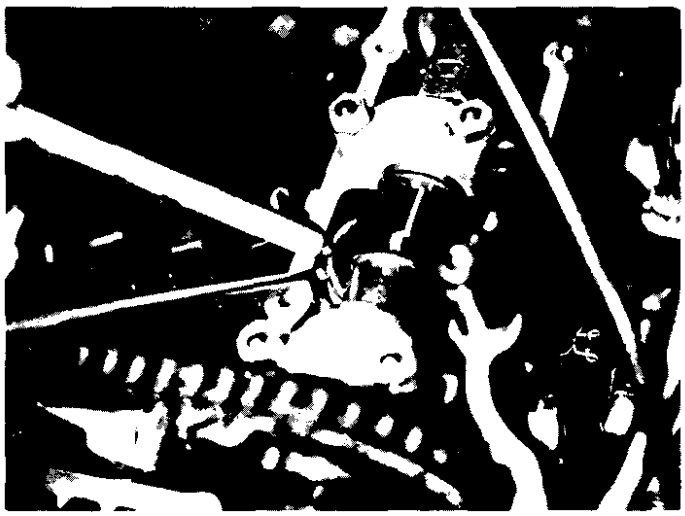

6. Proper pad selection is made as follows: (Use appropriate chart for exhaust or intake valves.)

   a. Find number of original (installed) pad number on chart. Read down on chart.

   b. Find measured valve clearance (from step **1)** on chart. Read across.

   c. At the intersection of installed pad number (down) and measured clearance (across) is a new pad number.

EXAMPLE: Exhaust valve, installed pad: No. 250 (read down)
Measured clearance: 0.32mm (read across)
New pad number: No. 260 (intersection of down & across)

NOTE: The new pad number is to *be* used as a guide only. Verify the correctness of this choice in the following steps).

7. Install the new pad in the lifter. Install the pad with the number down.

8. Remove tappet adjusting tool.

9. Turn crankshaft to rotate cam several rotations. This will set the pad in the lifter.

10. Check valve clearance (step 3). If clearance is incorrect, repeat preceding steps until proper clearance is obtained.

11. Inspect head cover gasket. If bent or torn, replace gasket.

12. Reinstall removed parts in reverse order.

H. Compression Pressure Measurement

Insufficient compression pressure will result in performance **loss** and may indicate leaking valves or worn or damaged rings.

Procedure

1. Make sure valve clearance is correct.

2. Warm up engine 2-3 minutes. Stop engine.

3. Remove spark plugs.

4. Install compression check gauge.

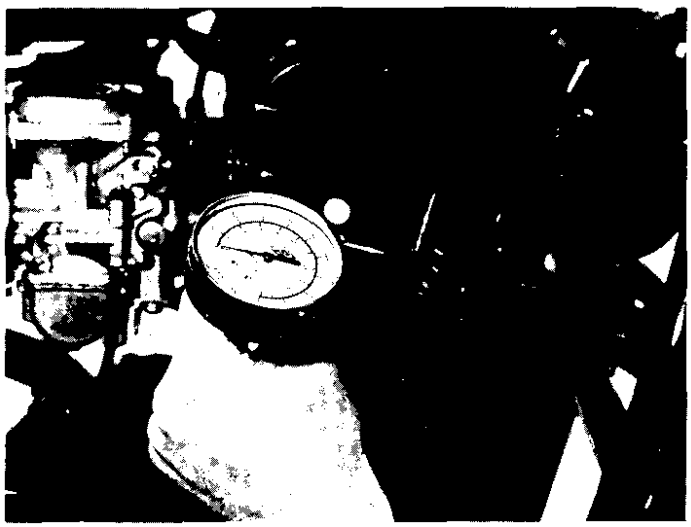

Intake

MEASURED CLEARANCE	200	205	210	215	220	225	230	235	240	245	250	255	260	265	270	275	280	285	290	295	300	305	310	315	320
0.00 ~ 0.05				200	205	210	215	220	225	230	235	240	245	250	255	260	265	270	275	280	285	290	295	300	305
0.06 ~ 0.10			200	205	210	215	220	225	230	235	240	245	250	255	260	265	270	275	280	285	290	295	300	305	310
0.11 ~ 0.15		200	205	210	215	220	225	230	235	240	245	250	255	260	265	270	275	280	285	290	295	300	305	310	315
0.16 ~ 0.20																									
0.21 ~ 0.25	205	210	215	220	225	230	235	240	245	250	255	260	265	270	275	280	285	290	295	300	305	310	315	320	
0.26 ~ 0.30	210	215	220	225	230	235	240	245	250	255	260	265	270	275	280	285	290	295	300	305	310	315	320		
0.31 ~ 0.35	215	220	225	230	235	240	245	250	255	260	265	270	275	280	285	290	295	300	305	310	315	320			
0.36 ~ 0.40	220	225	230	235	240	245	250	255	260	265	270	275	280	285	290	295	300	305	310	315	320				
0.41 ~ 0.45	225	230	235	240	245	250	255	260	265	270	275	280	285	290	295	300	305	310	315	320					
0.46 ~ 0.50	230	235	240	245	250	255	260	265	270	275	280	285	290	295	300	305	310	315	320						
0.51 ~ 0.55	235	240	245	250	255	260	265	270	275	280	285	290	295	300	305	310	315	320							
0.56 ~ 0.60	240	245	250	255	260	265	270	275	280	285	290	295	300	305	310	315	320								
0.61 ~ 0.65	245	250	255	260	265	270	275	280	285	290	295	300	305	310	315	320									
0.66 ~ 0.70	250	255	260	265	270	275	280	285	290	295	300	305	310	315	320										
0.71 ~ 0.75	255	260	265	270	275	280	285	290	295	300	305	310	315	320											
0.76 ~ 0.80	260	265	270	275	280	285	290	295	300	305	310	315	320												
0.81 ~ 0.85	265	270	275	280	285	290	295	300	305	310	315	320													
0.86 ~ 0.90	270	275	280	285	290	295	300	305	310	315	320														
0.91 ~ 0.95	275	280	285	290	295	300	305	310	315	320															
0.96 ~ 1.00	280	285	290	295	300	305	310	315	320																
1.01 ~ 1.05	285	290	295	300	305	310	315	320																	
1.06 ~ 1.10	290	295	300	305	310	315	320																		
1.11 ~ 1.15	295	300	305	310	315	320																			
1.16 ~ 1.20	300	305	310	315	320																				
1.21 ~ 1.25	305	310	315	320																					
1.26 ~ 1.30	310	315	320																						
1.31 ~ 1.35	315	320																							
1.36 ~ 1.40	320																								

VALVE CLEARANCE (engine cold) 0.16 ~ 0.20mm

Example: Installed is 250
Measured clearance is 0.32mm
Replace 250 pad with 265

*Pad number: (example) Pad No. 250 = 2.50mm
Pad No. 255 = 2.55mm
Always install pad with number down.

Exhaust

MEASURE CLEARANC	INSTALLED PAD NUMBER*																								
	200	205	210	215	220	225	230	235	240	245	250	255	260	265	270	275	280	285	290	295	300	305	310	315	32
0.00 ~ 0.05					200	205	210	215	220	225	230	235	240	245	250	255	260	265	270	275	280	285	290	295	30
0.06 ~ 0.10				200	205	210	215	220	225	230	235	240	245	250	255	260	265	270	275	280	285	290	295	300	30
0.11 ~ 0.15			200	205	210	215	220	225	230	235	240	245	250	255	260	265	270	275	280	285	290	295	300	305	31
0.16 ~ 0.20		200	205	210	215	220	225	230	235	240	245	250	255	260	265	270	275	280	285	290	295	300	305	310	31
0.21 ~ 0.25																									
0.26 ~ 0.30	205	210	215	220	225	230	235	240	245	250	255	260	265	270	275	280	285	290	295	300	305	310	315	320	
0.31 ~ 0.35	210	215	220	225	230	235	240	245	250	255	260	265	270	275	280	285	290	295	300	305	310	315	320		
0.36 ~ 0.40	215	220	225	230	235	240	245	250	255	260	265	270	275	280	285	290	295	300	305	310	315	320			
0.41 ~ 0.45	220	225	230	235	240	245	250	255	260	265	270	275	280	285	290	295	300	305	310	315	320				
0.46 ~ 0.50	225	230	235	240	245	250	255	260	265	270	275	280	285	290	295	300	305	310	315	320					
0.51 ~ 0.55	230	235	240	245	250	255	260	265	270	275	280	285	290	295	300	305	310	315	320						
0.56 ~ 0.60	235	240	245	250	255	260	265	270	275	280	285	290	295	300	305	310	315	320							
0.61 ~ 0.65	240	245	250	255	260	265	270	275	280	285	290	295	300	305	310	315	320								
0.66 ~ 0.70	245	250	255	260	265	270	275	280	285	290	295	300	305	310	315	320									
0.71 ~ 0.75	250	255	260	265	270	275	280	285	290	295	300	305	310	315	320										
0.76 ~ 0.80	255	260	265	270	275	280	285	290	295	300	305	310	315	320											
0.81 ~ 0.85	260	265	270	275	280	285	290	295	300	305	310	315	320												
0.86 ~ 0.90	265	270	275	280	285	290	295	300	305	310	315	320													
0.91 ~ 0.95	270	275	280	285	290	295	300	305	310	315	320														
0.96 ~ 1.00	275	280	285	290	295	300	305	310	315	320															
1.01 ~ 1.05	280	285	290	295	300	305	310	315	320																
1.06 ~ 1.10	285	290	295	300	305	310	315	320																	
1.11 ~ 1.15	290	295	300	305	310	315	320																		
1.16 ~ 1.20	295	300	305	310	315	320																			
1.21 ~ 1.25	300	305	310	315	320																				
1.26 ~ 1.30	305	310	315	320																					
1.31 ~ 1.35	310	315	320																						
1.36 ~ 1.40	315	320																							
1.41 ~ 1.45	320																								

VALVE CLEARANCE (engine cold) 0.21 ~ 0.25mm

Example: Installed is 250
Measured clearance is 0.32mm
Replace 250 pad with 260

*Pad number: (example) Pad No. 250 = 2.50mm
Pad No. 255 = 2.55mm
Always install pad with number down.

5. Turn over engine with kick or electric starter (make sure battery is fully charged) with throttle wide open until pressure indicated on the gauge does not increase further.

Compression pressure: (at sea level)	
Standard:	10kg/cm²(142 psi)
Minimum:	9kg/cm² (128 psi)
Maximum:	11kg/cm² (156 psi)

6. If pressure is too low, squirt a few drops of oil into the cylinder being measured. Measure compression again. If there is a higher reading than before (without oil), the piston rings may be worn or damaged. If the pressure remains the same after measuring with the oil, either or both the rings and valves may be the cause.

7 Check each cylinder. Compression pressure should not vary more than 1kg/cm² (14 psi) from one cylinder to any other cylinder.

2 - 4 CHASSIS

A. Fuel Petcock Cleaning

1. Turn the petcock lever to the "ON" or "RES" position. Remove the fuel pipe.

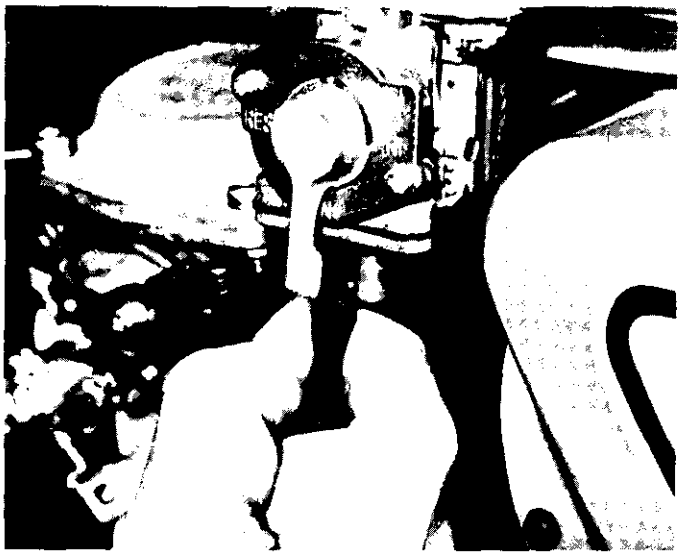

2. Remove the drain cover and clean it with solvent.

B. Fuel Petcock Disassembly

If the fuel petcock is leaking or excessively contaminated, it should be removed from the fuel tank and inspected.

1. Remove fuel tank and position it so that fuel will not spill when the petcock is removed.

2. Remove petcock and inspect filter screen. Replace filter if seriously contaminated.

3. Remove 4 screws on front and rear of petcock and remove plate, gaskets, lever and diaphragm.

4. Inspect all components and replace any that are damaged. If the diaphragm is in any way damaged, or the petcock body gasket surfaces scratched or corroded, the petcock assembly must be replaced. If there is abrasive damage to any component, the fuel tank must be drained and flushed.

5. Reassemble petcock and install on fuel tank.

C. Front And Rear Brake

See pages 158–159 for adjustments

1. Brake adjustment

The brakes can be adjusted by simply adjusting the free play of the brake lever and pedal. piston in the caliper moves forward as the brake pad wears out, automatically adjusting the clearance between the brake pad and the brake disc.)

a. Front brake lever free play

> CAUTION: Proper lever free play is essential to avoid excessive brake drag.

1) Loosen the adjusting screw lock nut.

2) By turning the adjusting screw in or out, adjust the play of the brake lever and then tighten the lock nut. Measure free play at end of lever.

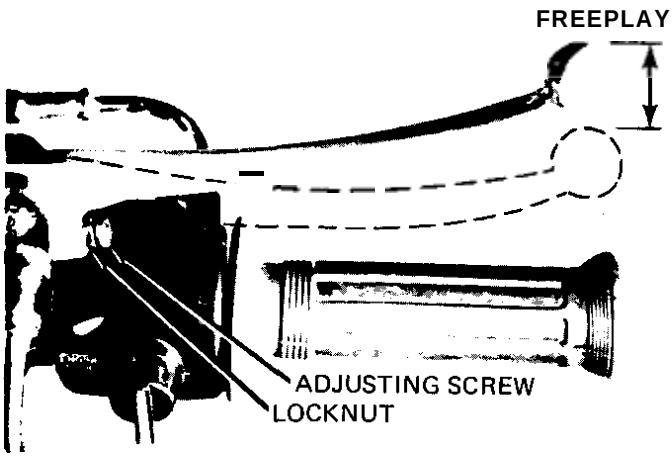

Free play: 5~8mm (0.2~0.3 in.)

b. Rear brake pedal free play

CAUTION: Proper pedal free play is **essential to avoid excessive brake drag.**

FREE PLAY : 10mm (0.437 in.)

1) Loosen the adjuster lock nut at the push rod.

2) By turning the adjuster in or out, adjust the play **of** the brake pedal and then tighten the lock nut.

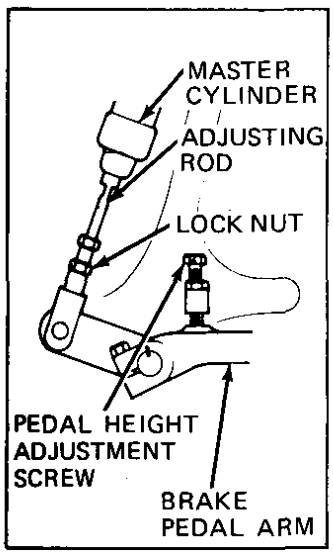

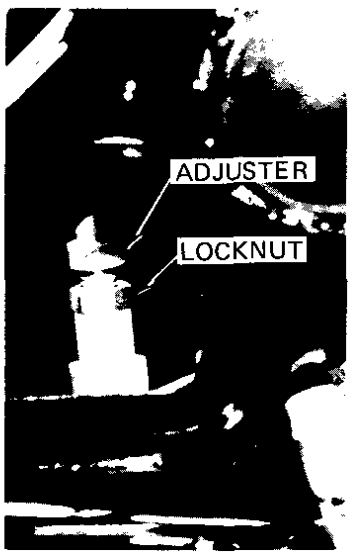

2. Brake pad check

To check pad wear, open the wear indicator cap. **If** any pad is worn to the red line, replace both pads in the caliper.

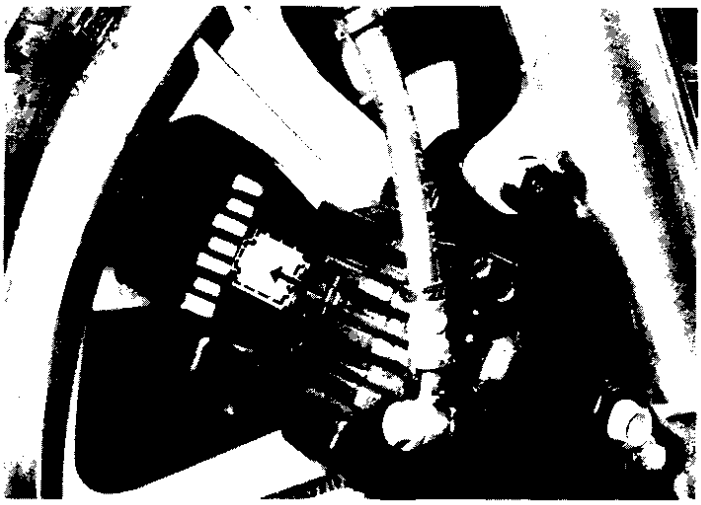

3 Check the brake fluid level

Insufficient brake fluid rnay allow air to enter the brake system, possibly causing the brake to become ineffective. Check the brake fluid **level** and replenish when necessary and observe these precautions:

a. **Use** only the designated quality brake fluid; otherwise, the rubber seals rnay deteriorate, causing leakage and poor brake performance.

Recommended brake fluids:
DOT No. 3 with 240° C (464°F)
boiling point

b. Refill with the same type and brand of brake fluid; mixing fluids may result in a harmful chemical reaction and lead to poor performance.

c. Be careful that water or other contamination does not enter the master cylinder when refilling. Water will significantly lower the boiling point and may result in vapor lock.

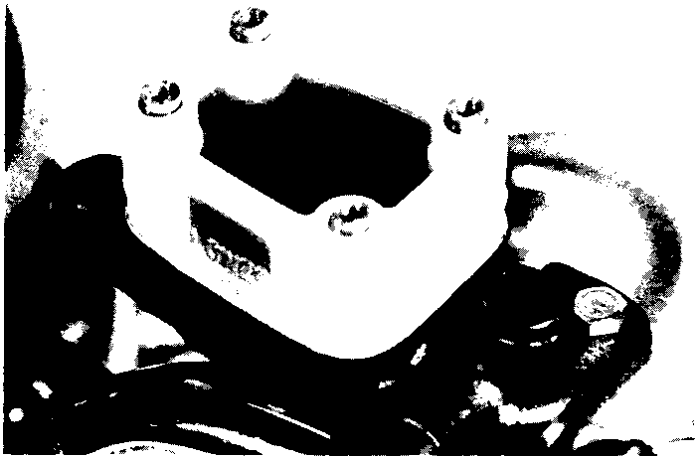

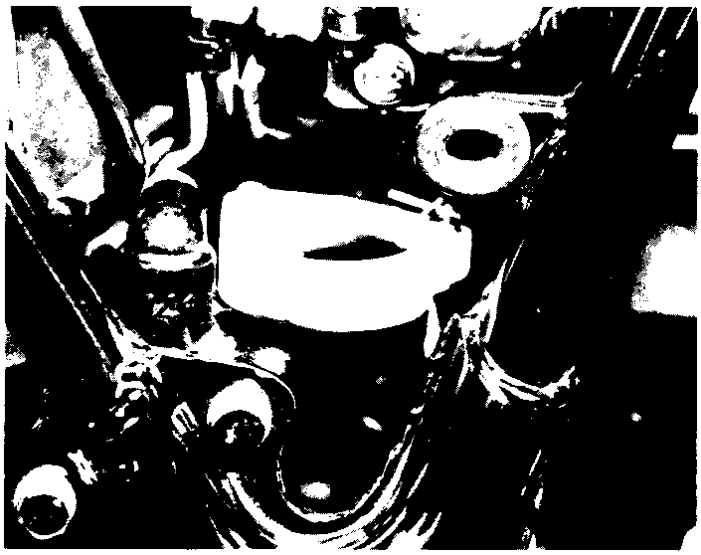

D. Wheels And Tires

1. Checking the aluminum wheels.

a. Check for cracks, bends or warpage of the wheels. If a wheel is deformed or cracked, it must be replaced.

NOTE: These aluminum wheels are NOT designed for use with tubeless tires.

b. Raise the wheel off the ground. Spin.

Rim runout limits:
Vertical - 2mm (0.08 in.)
Lateral - 1mm (0.04 in.)

2. Front axle

a. Check axle nuts.

Front axle nut torque:
7.0~10.0 m-kg
(50~72 ft-lb)
Rear axle nut torque:
12~18 m-kg
(87~130 ft-lb)

b. Check axle holder nuts (right side).

Front axle holder nuts:
1.3 - 2.3 m-kg (9-17 ft-lbs)

CAUTION: First tighten the nut on the front end **of the** axle holder, and then tighten the nut on the rear end.

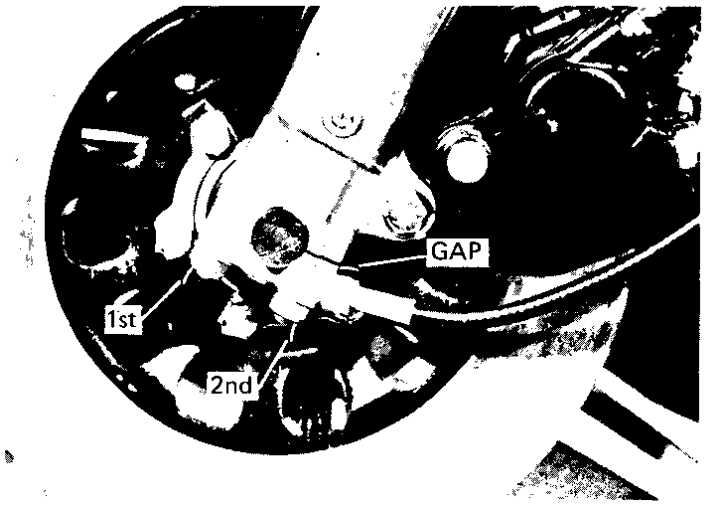

Rear axle pinch bolt:
0.45 - 0.75 m-kg (3-5 ft-lbs)

3. Tires

Tire pressure

Front	1.8 kg/cm² (26 psi)	Normal riding
Rear	2.0 kg/cm² (28 psi)	
Front	2.0 kg/cm² (28 psi)	High speed riding (above 100 km/h or 60 mph)
Rear	2.3 kg/cm² (33 psi)	

b. Check the tire wear

If a tire tread shows crosswise lines, it means that the tire is worn to its limit. Replace the tire.

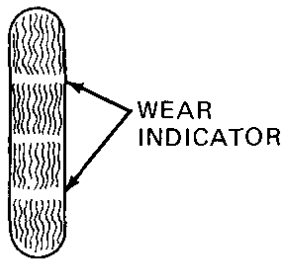

E. Front Fork Oil Change

1. Raise the machine or remove the front wheel so that there is no weight on the front end of the machine.

2. Remove the rubber cap from the top of each fork.

3. The spring seat and springs are retained by a stopper ring (spring wire circlip). It is necessary to depress the spring seat and fork springs to remove the stopper ring. Remove the stopper ring by carefully prying out one end with a small screwdriver.

4. Place open container under each drain hole. Remove drain screw from each outer tube.

CAUTION: Do not allow oil to contact disc brake components.

5. When most of the oil has drained, slowly raise and lower the outer tubes to pump the remaining oil. It may be necessary to remove the spring seat and top spring to keep them from falling out when raising fork tubes.

6. Inspect drain screw gasket. Replace if damaged. Reinstall drain screw.

7. Pour specified amount of oil into the fork inner tube.

Front fork oil (each fork): 170cc
2OW Yamaha Fork Oil

8. After filling, slowly pump the outer tubes up and down to distribute the oil.

9. Inspect the O-ring on the spring seat. Replace O-ring if damaged.

10. Reinstall top spring, O-ring, spring seat, stopper ring and rubber cap.

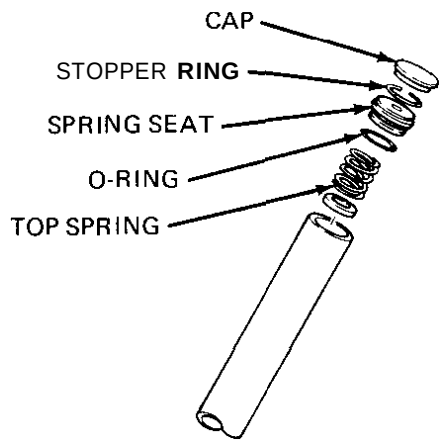

CAUTION: Always use a new stopper ring (wire circlip).

F. Steering Head Adjustment

The XS750D steering head is fitted with tapered roller bearings. The steering assembly should be checked periodically for looseness.

Procedure

1. Raise front end of machine so that there is no weight on the front wheel.

2. Grasp bottom of forks and gently rock fork assembly backward and forward, checking for looseness in the steering assembly bearings.

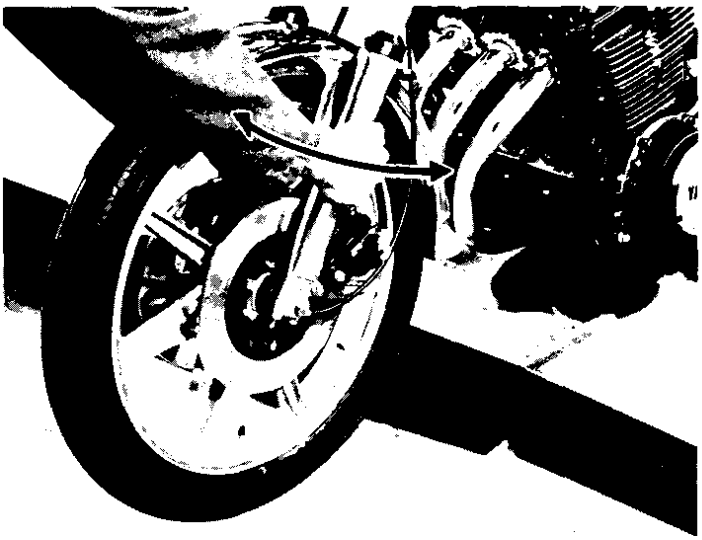

3. If there is looseness in the steering head, loosen the crown pinch bolt and steering fitting bolt.

4. Use steering nut wrench to loosen top steering fitting nut. The top nut serves as a lock nut.

5. Tighten the lower steering fitting nut until the steering head is tight, but does not bind when forks are turned.

6. Retighten the top steering fitting nut, steering fitting bolt and crown pinch bolt, in that order.

7. Recheck steering adjustment to make sure there is no binding when the forks are moved from lock to lock. If necessary, repeat adjustment procedure.

G. Throttle Cable And Grip Lubrication

The throttle twist grip assembly should be greased at the time that the cable is lubricated since the grip must be removed to get at the end of the throttle cable. Two screws clamp the throttle housing to the handlebar. Once these two are removed, the end of the cable can be heid high to pour in several drops of lubricant. With the throttle grip disassembled, coat the inside surface of the throttle grip guide tube with a suitable all-purpose grease to cut down friction.

H. Lubrication **Of** Levers, Pedals, Etc.

1. Lubricate the pivoting parts of the brake and clutch levers with motor oil (10W30).

2. Lubricate the shaft of the brake pedal with lithium soap grease.

2-5 ELECTRICAL

A. Contact Breaker Point Adjustment

1. Remove breaker point cover.

2. Each cylinder has a set of breaker points. The No. 1 (left) cylinder set is marked with a "1" on the backing plate. The No. 2 (center) cylinder set is marked with a "2", and the No. 3 cylinder set is marked "3". The spark plug wires are also numbered.

3. Check contact breaker point gap (at largest gap) with feeler gauge.

Contact Breaker Gap:
0.3 - 0.4mm (.012~.016 in.)

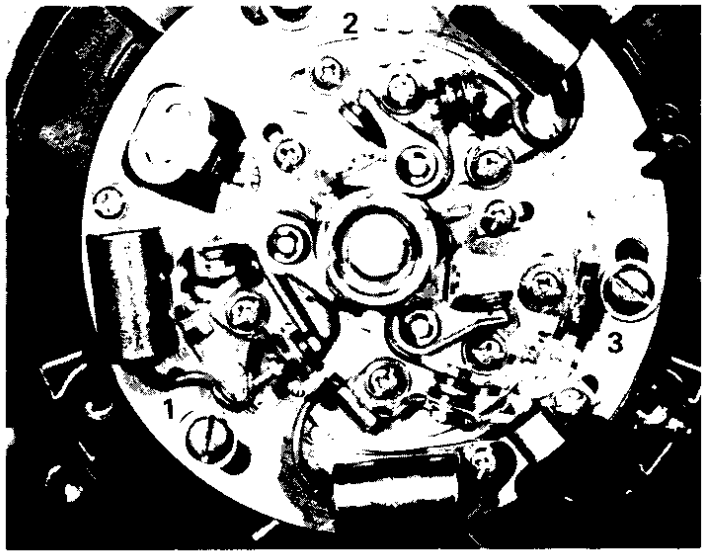

If necessary, adjust by loosening securing screws and moving the adjustable contact point.

4. Tighten adjusting screws and recheck breaker point gap.

B. Contact Breaker Point Maintenance

1. Apply a few drops of lightweight lubricant to the point cam lubricators.

2. The points can be lightly sanded with fine emery paper to remove corrosion. Then place a piece of clean paper between the points and let them close. Remove the paper. Repeat until no residue shows. The paper may be dipped in lacquer thinner or contact point cleaning fluid to remove oil or sanding residue from the point surface.

3. Point replacement should be necessary only when point gap exceeds maximum tolerance, when the points become severely pitted, or if the points become shorted or show faulty operation. New points must be cleaned and adjusted when installed.

C. Ignition Timing

NOTE: Point gap must beset before setting timing.

1. Ignition timing is checked with a timing light by observing the position of the stationary pointer and the marks stamped on the governor assembly. The governor assembly is marked as follows:

"1F"	Retarded firing point for L.H. cylinder.
"2F"	Retarded firing point for center cylinder.
"3F"	Retarded firing point for R.H. cylinder.
"T"	Top dead center for each cylinder.

There are also three (3) pair of unmarked lines. They indicate the Full Advance firing range for each cylinder.

Connect timing light to No. 1 (left) cylinder.

2. Ignition timing of No. 1 cylinder must be set first. Connect timing light to No. 1 spark plug lead wire.

3. Start engine

4. The stationary pointer should line up with the "1F" timing mark on the governor. If it does not align, loosen 3 breaker backing plate screws and move the complete backing plate until "1F" and the pointer marks align.

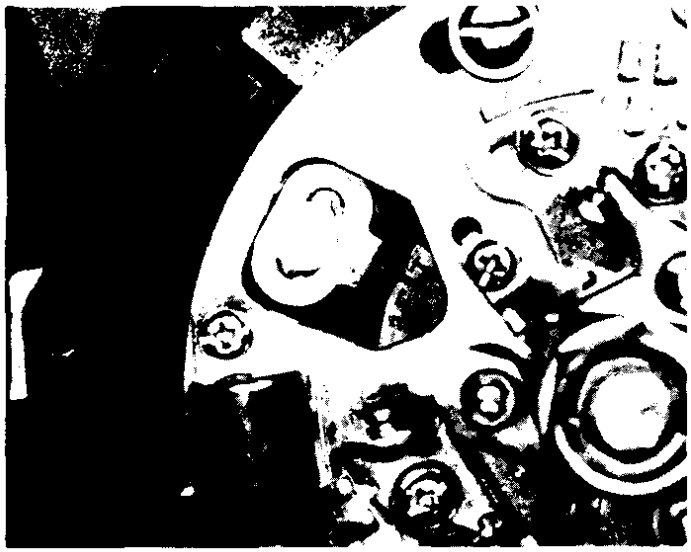

5. Retighten screw. Check timing again for the No. 1 cylinder.

6. Rev the engineto above 3,000 rpm. The pointer should indicate the area of the two "full advance" marks on the governor.

NOTE: Retarded ignition: 1,100~1,550
Advance begins: 1,600'
Full Advance achieved: 2,900

7. Repeat procedure (steps 2-7) for remaining cylinders. Loosen each individual point assembly plate before adjusting. Retighten screws and recheck timing for each cylinder.

CAUTION: Never bend adjusting pointer.

8. The above procedure is recommended for setting ignition timing. However, the following information is provided so that the position of the static pointer can be verified using a degree wheel.

Retarded ignition: 10° BTDC
Fully Advanced Ignition: 38.5±1.5° BTDC

D. Battery

A poorly maintained battery will deteriorate quickly. The battery fluid should be checked at least once a month.

1. The level should be between the upper and lower level marks. **Use** only distilled water for refilling. Normal tap water contains minerals which are harmful to a battery; therefore, refill only with distilled water.

2. Always make sure the connections are correct when installing the battery. The red lead is for the (+) terminal and the black lead is for the (-) terminal. Make sure the breather pipe is properly connected, properly routed, and is not damaged or obstructed.

NOTE: The battery must be charged before using to insure maximum performance. Failure to properly charge the battery before first use, or a low electrolyte level, will cause premature failure of the battery.

Charging current: 1.4 Amps
Charging hours: 10 hrs.

E. Spark **Plug**

The spark plug indicates how the engine is operating. If the engine is operating correctly. and the machine is being ridden properly, the tip of the white insulator around the positive electrode of the spark plug will be a medium tan color. If the insulator is very dark brown or black color, then a plug with a hotter heat range might be required. This situation is quite common during the engine break-in period. If the insulator tip shows a very light tan or white color or is actually pure white and glazed, or if electrodes show signs of melting, then a spark plug with a colder heat range is required. Remember, the insulator area surrounding the positive electrode of the spark plug must be a medium tan color. If it is not, check carburetion, timing and ignition adjustments.

The spark plug must be removed and checked. Check electrode wear, insulator color, and electrode gap.

Spark plug gap: 0.6~0.7mm (0.02~0.03 in.)

Engine heat and combustion chamber deposits will cause any spark plug to slowly break down and erode. If the electrodes finally become too worn, or if for any reason you believe the spark plug is not functioning correctly, replace it. When installing the plug, always clean the gasket surface, use a new gasket, wipe off any grime that might be present on the surface of the spark plug, and torque the spark plug properly.

Standard Spark Plug:	NGK BP-7ES Champion N-7Y
Tightening Torque:	1.5~2.5 m-kg (10.8~18.1 ft-lb)

F. Headlight

1. Headlight beam adjustment.

When necessary, adjust the headlight beam as follows:

a. Adjust horizontally by tightening or loosening the adjust screw.

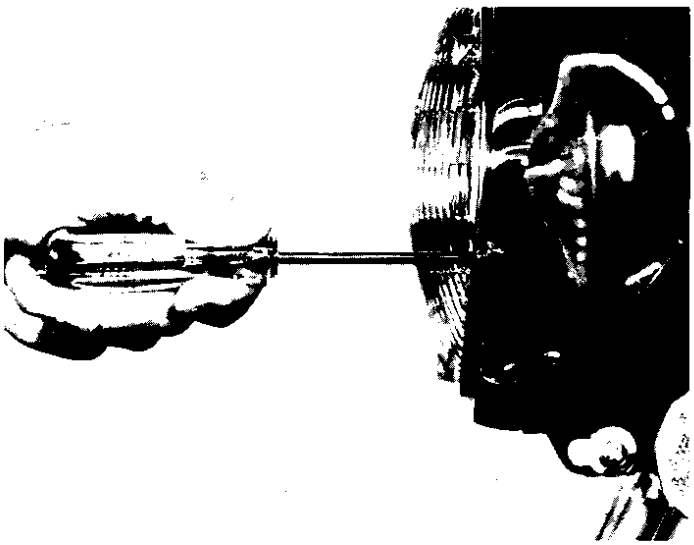

To adjust to the right: Tighten the screw To adjust to the left: Loosen the screw

b. Adjust vertically as follows:

1) Loosen adjusting screw under headlight body.

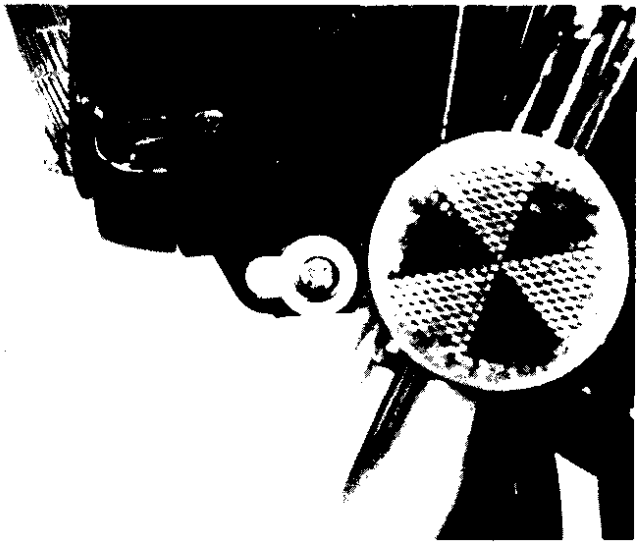

Adjust vertically by moving the headlight body. When proper adjustment is determined, retighten adjusting screw.

2. Replacing the headlight bulb.

a. Unhook springs and pull the defective unit out *of* the shell.

b. Slip a new unit into position and install springs.

c. Adjust headlight beam.

NOTE: Take care not to damage the headlight. It is very fragile.

ENGINE OVERHAUL

3-1 ENGINE REMOVAL

NOTE: It is not necessary to remove the engine to remove the cylinder head, cylinder, or pistons.

A. Preparation For Removal

1. All dirt, mud, dust and foreign material should be thoroughly removed from the exterior of the engine before removal and disassembly. This will help prevent any harmful foreign material from entering the engine.

2. Before engine removal and disassembly, be sure that you have the proper tools and cleaning equipment so that you can perform a clean and efficient job.

3. During disassembly of the engine, clean and place all parts in trays in order of disassembly. This will speed assembly time and help insure correct reinstallation of all engine parts.

4. Place machine on center stand. Start engine and allow it to warm up. Stop engine and drain engine/transmission oil.

5. Remove oil filter element to drain oil filter.

6. If middle gear case is to be removed, drain middle gear oil.

7. Remove air scoop from cylinder head cover.

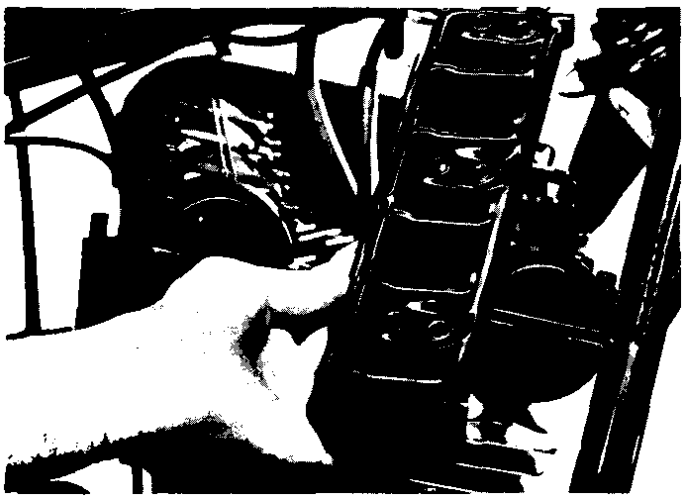

B. Fuel Tank Removal

1. Turn fuel petcocks to "on" (there is no "off" position—fuel will not flow from a petcock on the "on" position unless the engine is operating). Disconnect fuel pipes and vacuum pipes from petcock.

2. Lift seat and remove fuel tank holding bolt. Remove fuel tank.

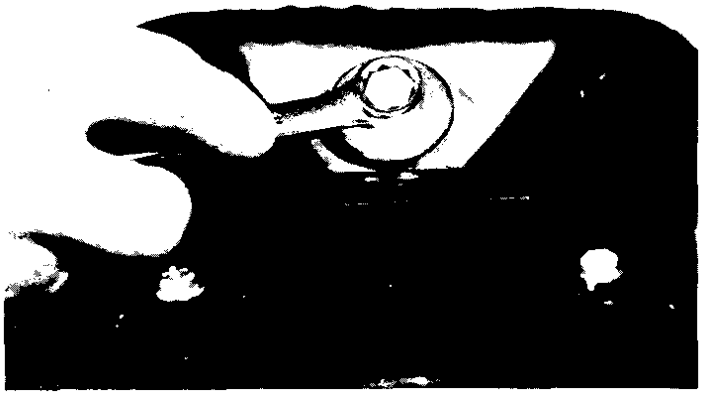

C. Muffler, Footrest, Brake Pedal

Remove rear brake pedal and passenger right footrest.

2. Remove exhaust pipe holding screws from cylinder head.

3. Remove exhaust pipes and muffler as an assembly.

D. Side Cover, Air Cleaner Case

1. Remove left and right side covers.

2. Remove screws holding intake silencers (left and right). Remove intake silencers.

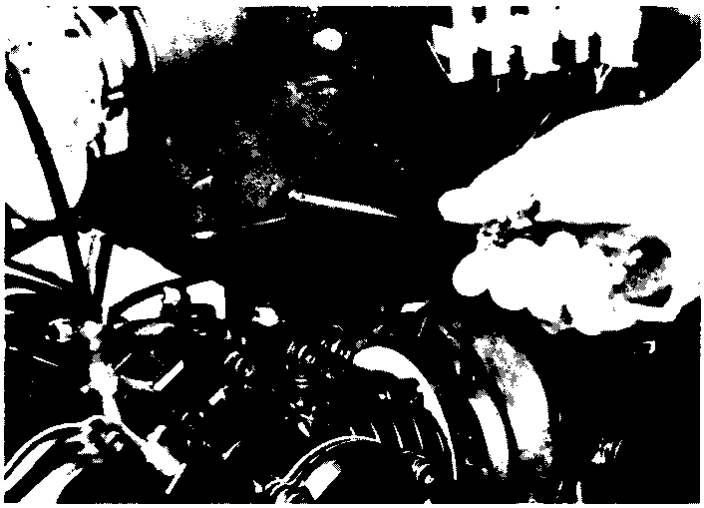

3. Loosen clamps holding carburetors to air cleaner case and intake manifolds. Loosen breather hose clamp at air cleaner case junction.

4. Remove bolts holding air cleaner case to frame. Note ground wire connection on left frame bracket.

5. Pull air cleaner case to the rear. Remove clutch cable from holder attached to the left carburetor. Lift carburetors back and to the left. Remove throttle cable from carburetors.

6. Remove air cleaner case,

E. Wiring and Cables

1. Pull back rubber cover on clutch adjustor at engine. Disconnect clutch cable.

2. Remove spark plug wires and tachometer cable.

3. Remove two *(2)* screws holding starter motor cover. Remove starter motor cover. Disconnect electric starter cable.

4. Disconnect ground wire from top of engine case.

5. Disconnect wiring harness couplers on left side of machine. Remove ignition wiring (orange, yellow, grey, blue wires), generator wiring (white wires), and field wiring (green, black wires). Position wires so that they can be safely removed.

F. Drive Shaft Joint

1. Pull rubber boot from drive shaft coupling to expose four (4) bolts.

2. Remove four (4) bolts on drive shaft coupling.

G. Removal

1. Remove three (3) engine mounting bolts from frame. Remove footrests with the two *(2)* rear engine mounting bolts.

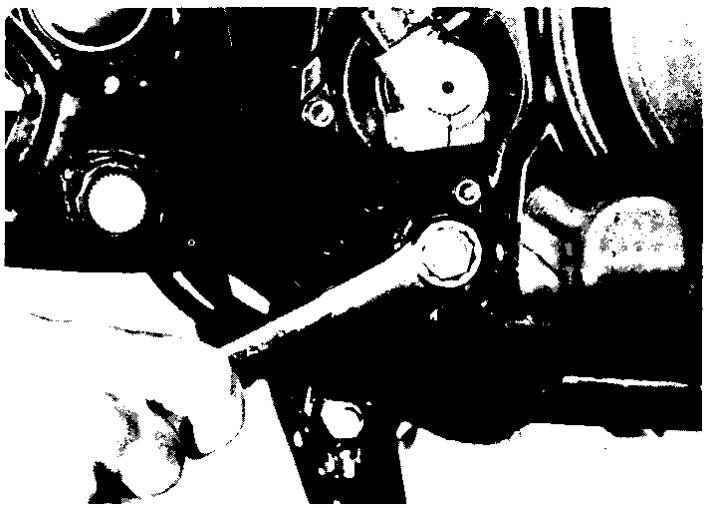

2. Slide engine forward. Remove engine to the right. Position a box or other support to the right of the machine for assistance when removing the engine.

3-2 ENGINE DISASSEMBLY

A. Cylinder Head and Cylinder Removal

NOTE: Cylinder head and cylinder can be removed without removing engine.

1. Remove cylinder head cover.

2. Remove points cover. Rotate the crankshaft to T.D.C. of the compression stroke on the NO. 1 (L.H.) cylinder. Tie each end of the cam chain to prevent it from falling into the crankcases when it is separated. Push out the master link pins with the cam chain cutter.

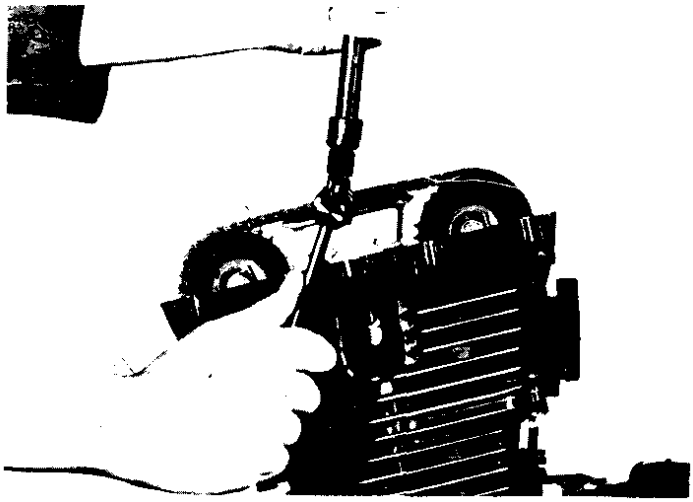

CAUTION: Whenever the cam chain is separated, valve and cylinder head damage can occur **by** random turning of the cam shafts.

3. Rotate intake cam 1/6 turn counterclockwise (from L.H. end) and rotate exhaust cam 1/6 turn clockwise (from L.H. end). See illustration.

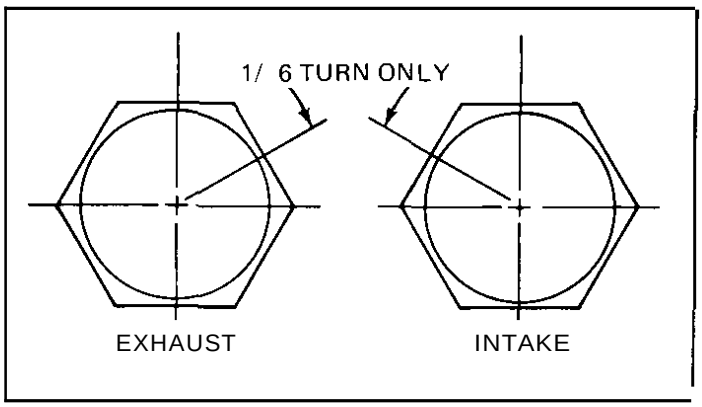

4. Remove cam chain guide stopper.

5. Remove the cam caps

CAUTION: To avoid damage to the camshaft caps, observe the following:

a. Position cams as described in step **3.**

b. The camshaft caps are numbered left to right 1, 2, **3,** 4 and 'E' or **'I'** for intake or exhaust. Damage will result **if** the caps are incorrectly removed or installed.

c. Remove camshaft caps from right to left (4, 3, 2, 1). Notice that the arrows on the caps all point to the LEFT.

d. Remove cams.

6. Remove two (2) cam chain tensioner securing bolts and remove tensioner assembly.

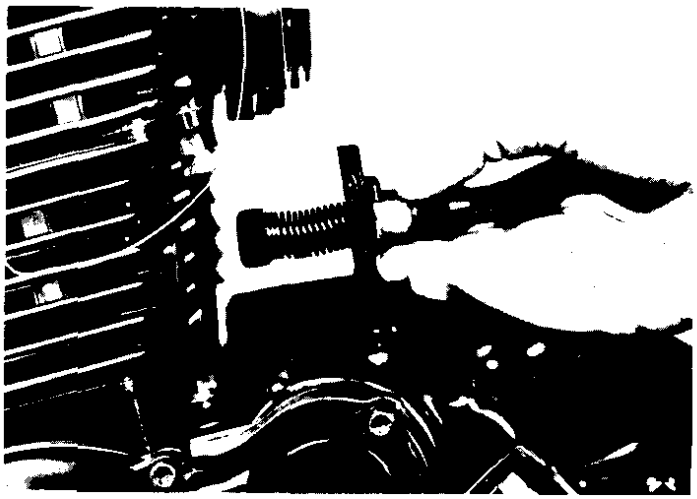

7. Remove cylinder head oil pipe union bolts and remove oil pipe. Note placement of copper gaskets.

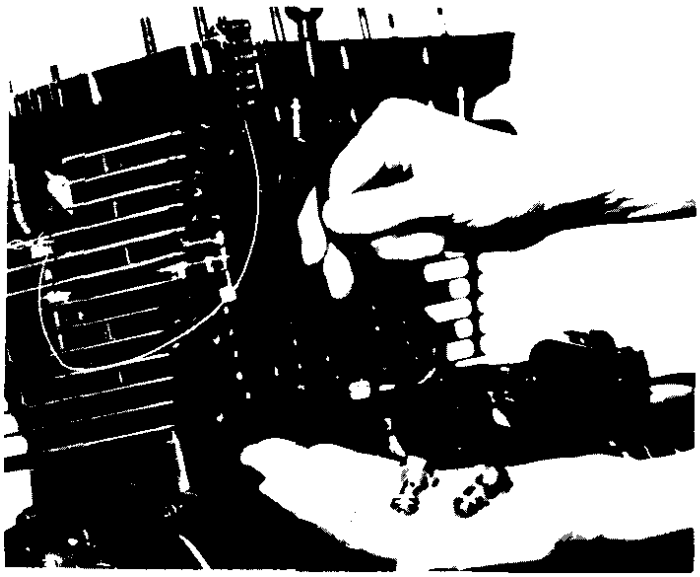

8. Remove spark plugs.

9. Remove cylinder head holding nuts and bolts as follows:

   a. Loosen each nut and bolt ½ turn, observing the torque sequence.

   b. Remove the cylinder head holding nuts first.

   c. Note location of larger washers on two (2) center exhaust studs.

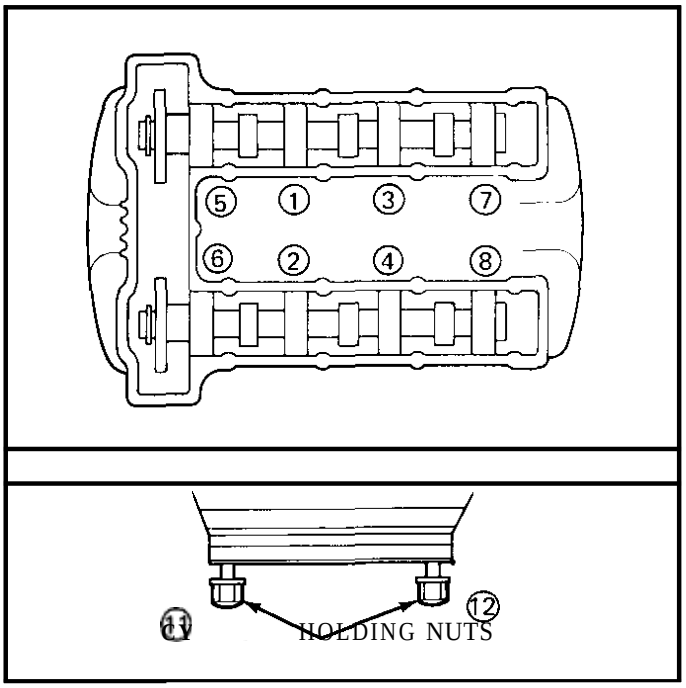

10. Remove cylinder head. Remove cylinder. **It may** be necessary to tap each lightly with a soft hammer.

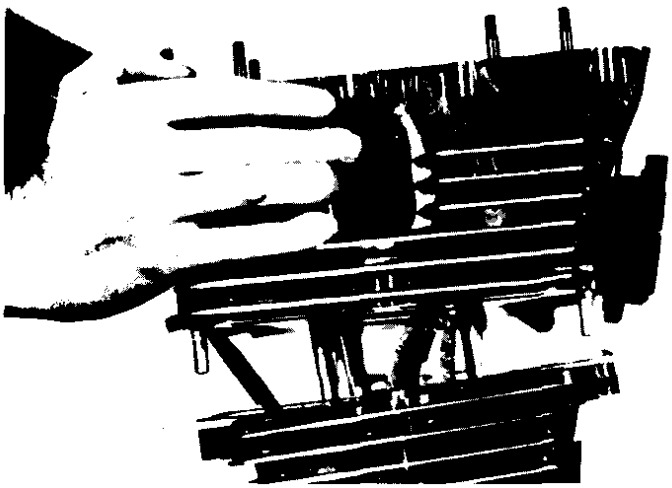

B. Cylinder Head Disassembly

1. Remove valve lifters and pads. Place each lifter in a box that identifies the location of each lifter.

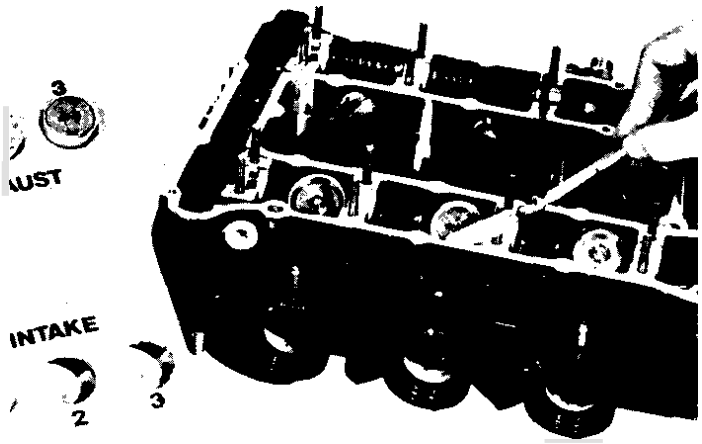

CAUTION: Lifters must always be installed in their original locations.

2. Install the valve spring compressor (special tool). Remove the valve keepers by using a magnet. Remove the retainer and valve springs.

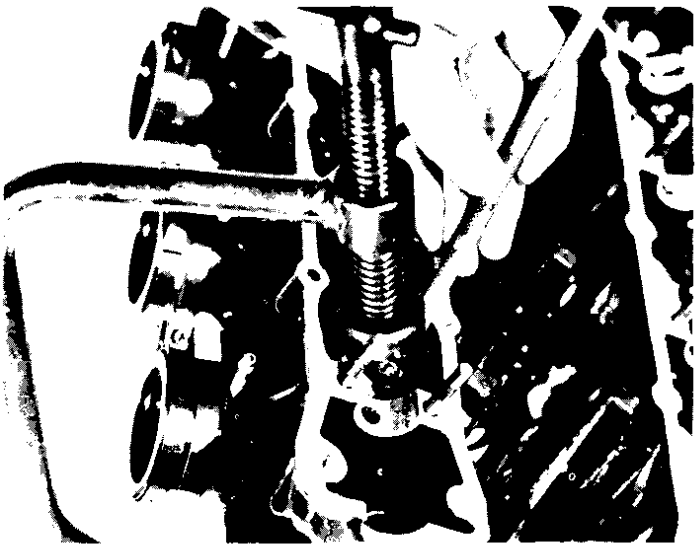

NOTE: The valve springs are progressively wound. The more tightly wound end is placed down against the cylinder head.

3. Remove valves.

NOTE: Deburr any deformed valve stem end. Use an oil stone to smooth the stem end. This will help prevent damage to the valve guide during valve removal.

C. Piston Removal

1. Mark each piston to aid in reassembly.

2. Place a clean towel or rag into the crankcase to keep circlips and material from falling into the engine.

3. Remove piston pin clips, piston pins, and pistons.

D. Generator

1. Remove generator wiring harness from mounting clips. Remove oil pressure warning switch wire.

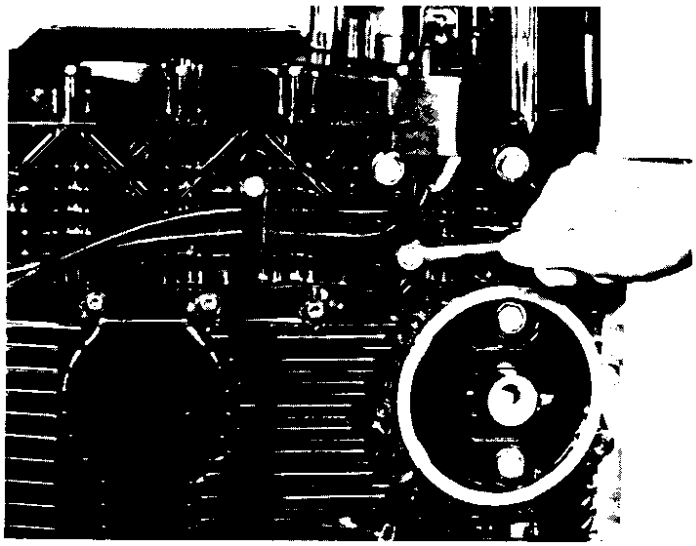

2. Remove kick crank

3. Remove generator cover.

4. Remove the bolt, plate washer and lock washer from the rotor. Use the rotor holding tool and bolt (special tools) to remove rotor.

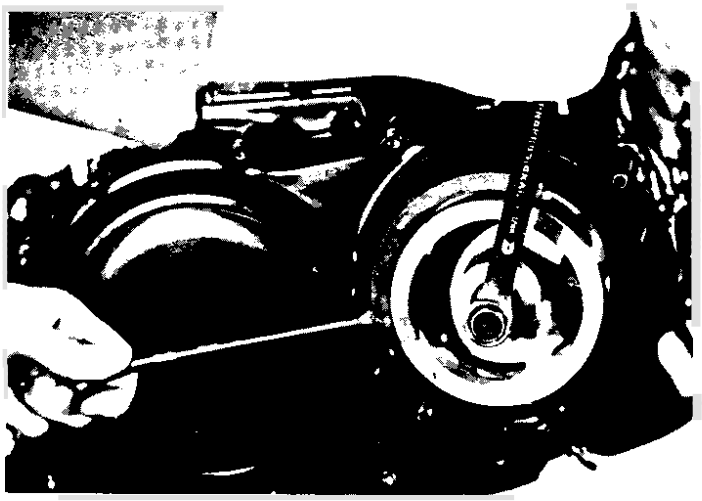

5. Remove the crankcase cover bolts and remove the cover.

6. Remove oil pressure warning switch.

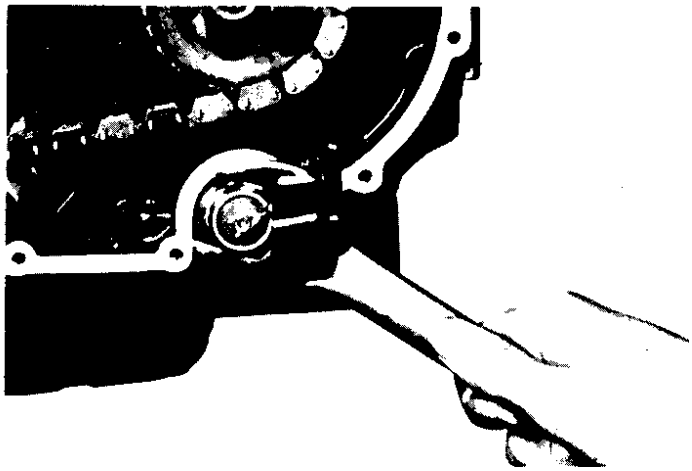

E. Bearing Housing

Remove four **(4)** bearing housing securing bolts and remove bearing housing.

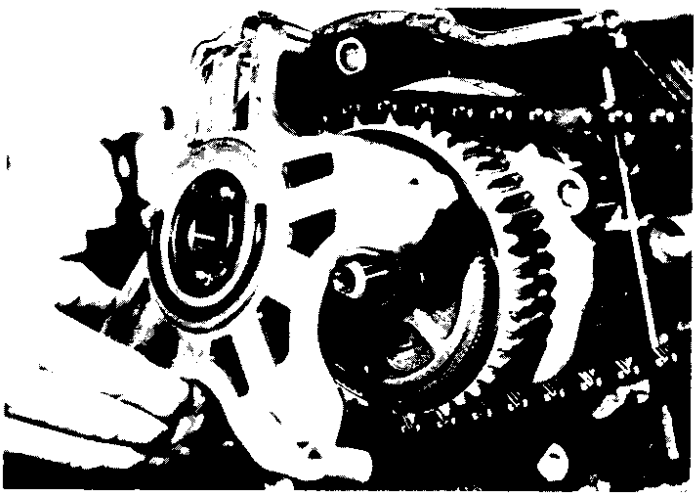

F. Clutch and Primary Driven Gear

1. Remove small circlip and washer from R.H. end of transmission.

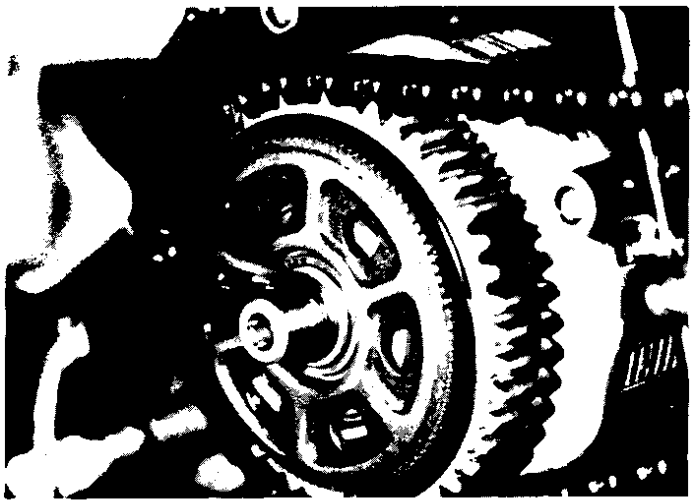

2. Remove larger circlip.

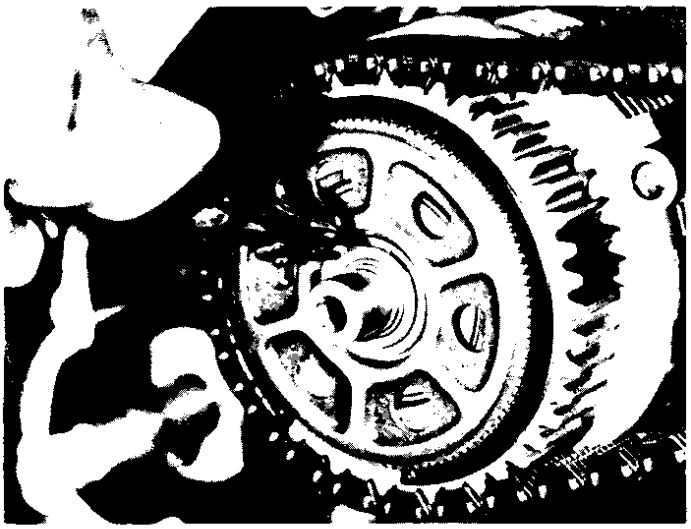

3. Remove clutch damper.

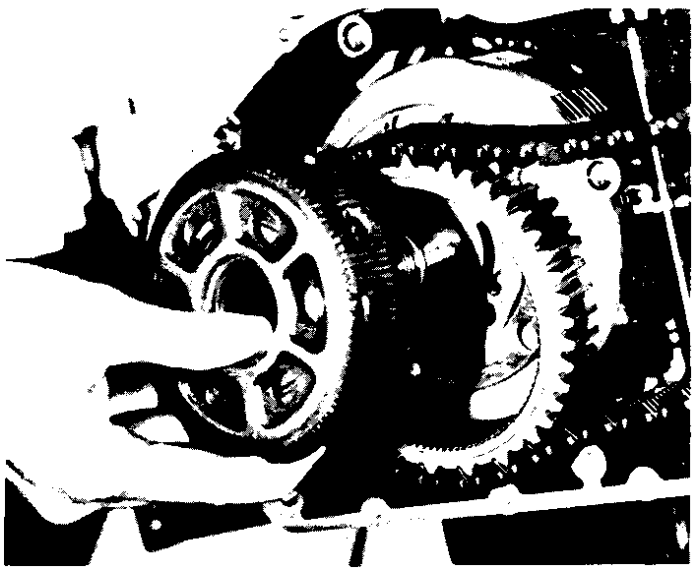

4. Remove primary driven gear and chain.

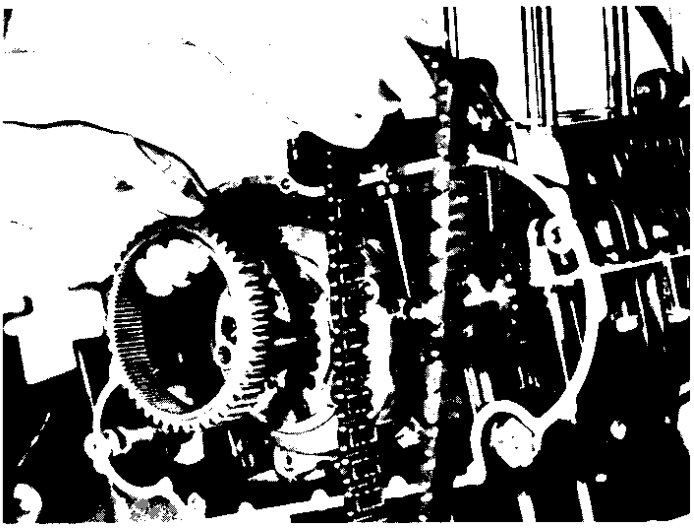

5. Remove clutch housing.

NOTE: If the clutch plates are stuck to the housing, thread in the clutch adjuster screw on the left side of the engine. This will push off the housing.

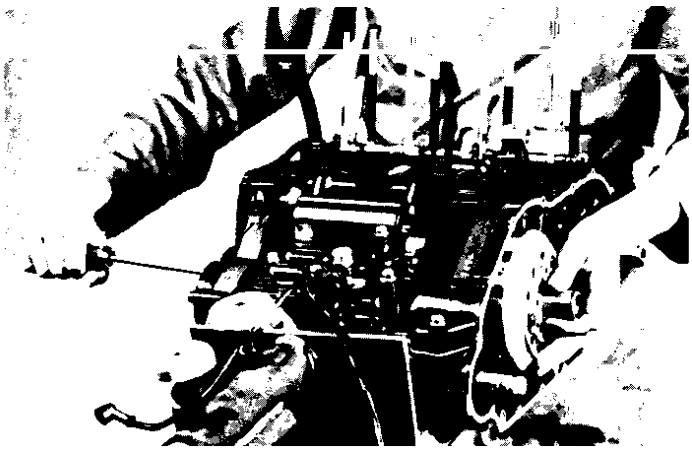

6. Remove washer and circlip in front of pressure plate.

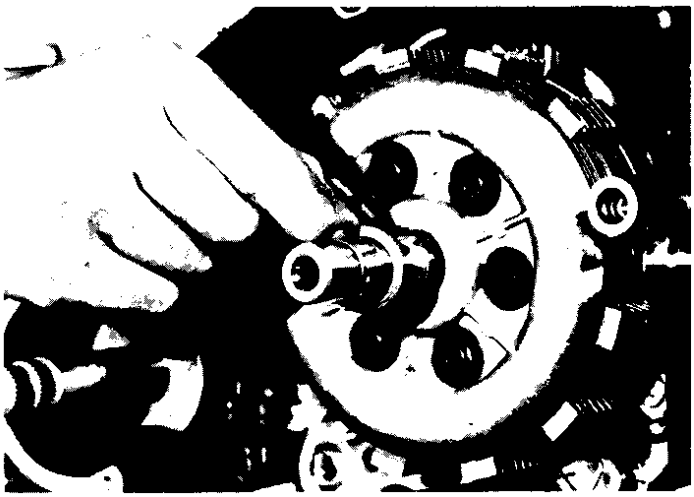

7. Remove pressure plate screws and clutch springs. Remove pressure plate.

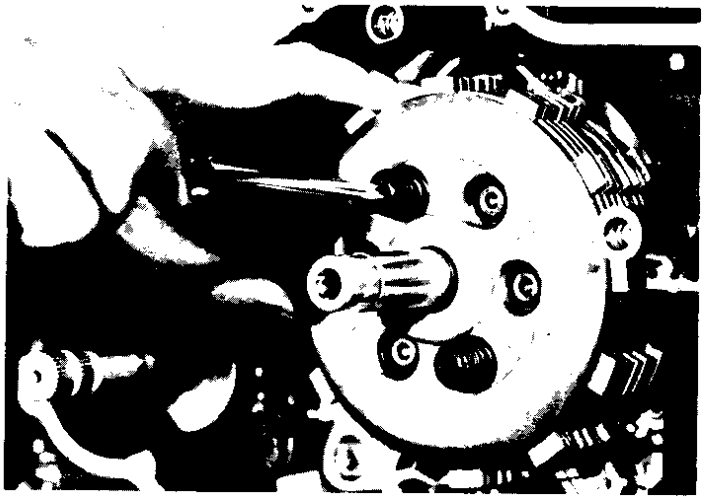

8. Remove clutch plates, clutch push rod and ball bearing.

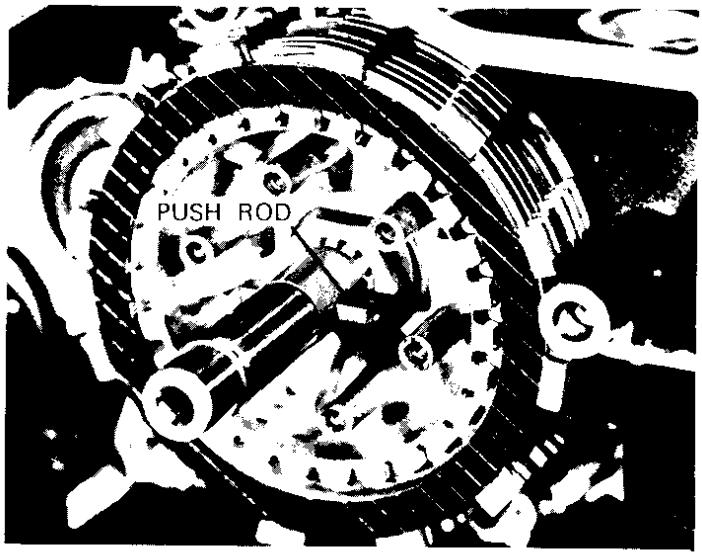

9. Use clutch holding tool (special tool) to hold clutch boss. Use deep 32mm socket to remove clutch boss nut. Remove nut, spring washer, clutch boss, plate washer, and spacer.

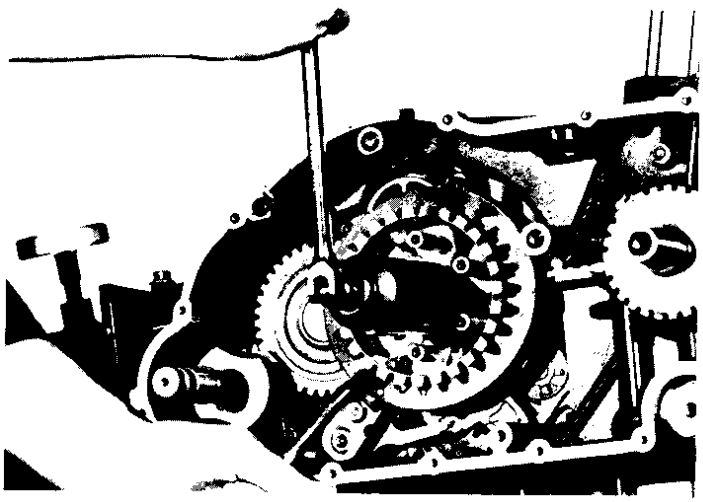

G. Kick Gear Removal

1. Remove circlip holding the kick idlegear.

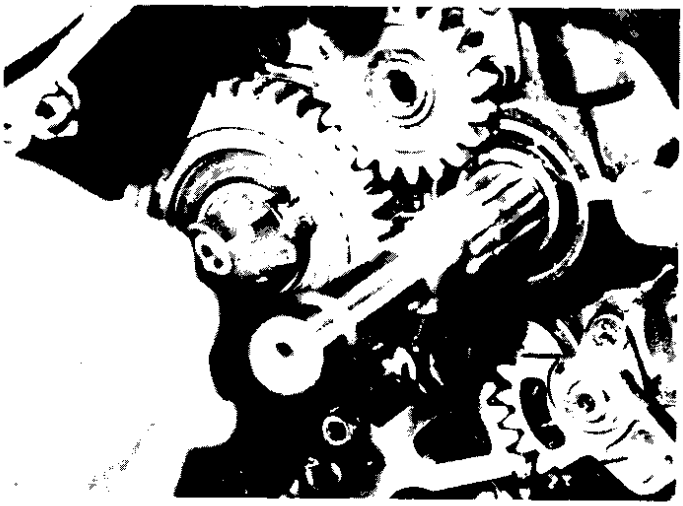

2. Install the kick crank on the kick shaft. Pull the kick starter assembly and the kick idle gear out together. Remove bearing and washer.

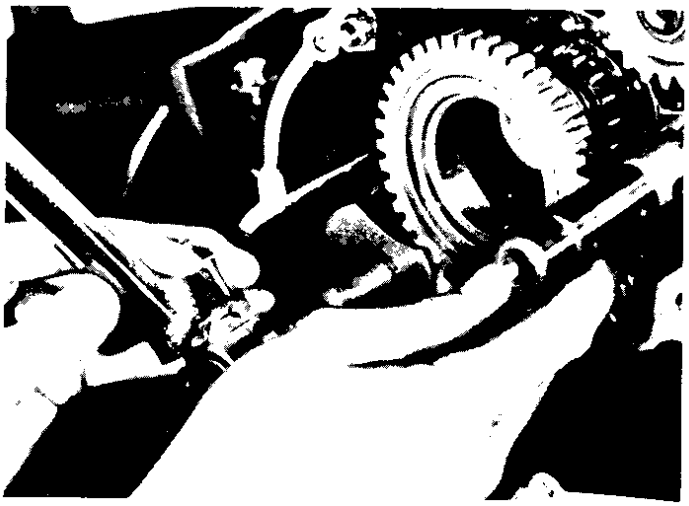

3. Remove the circlip holding kick gear **4.** Remove the washer and gear.

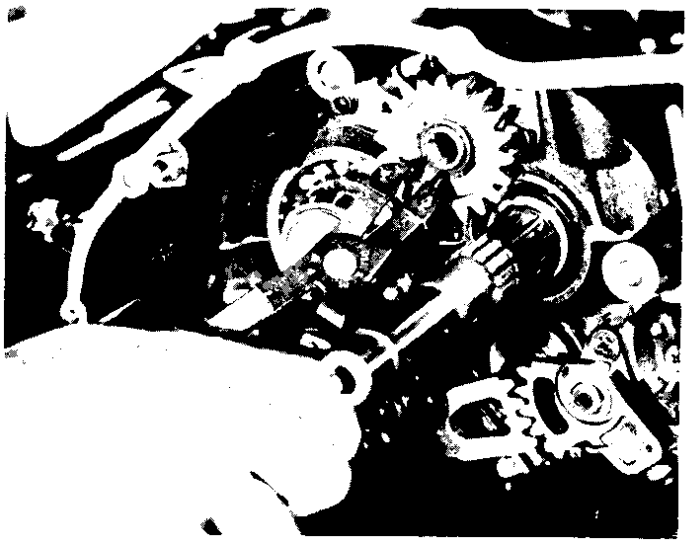

4. Remove kick gear holder bolts. Use a slide hammer to remove the holder.

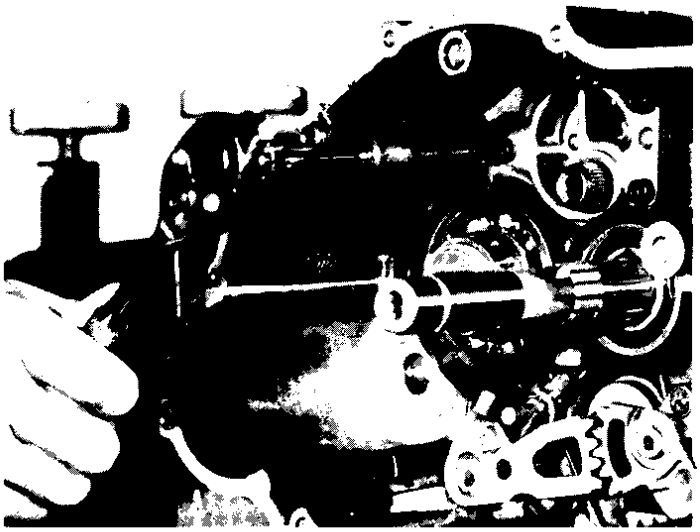

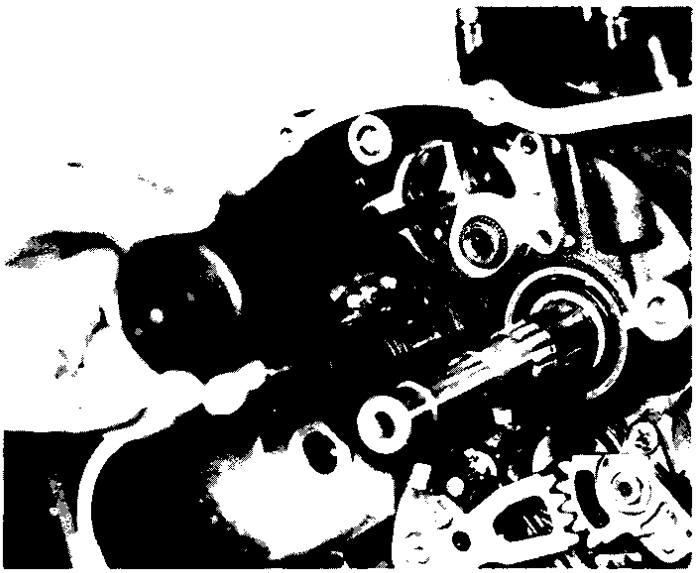

5. Remove the kick shaft assembly.

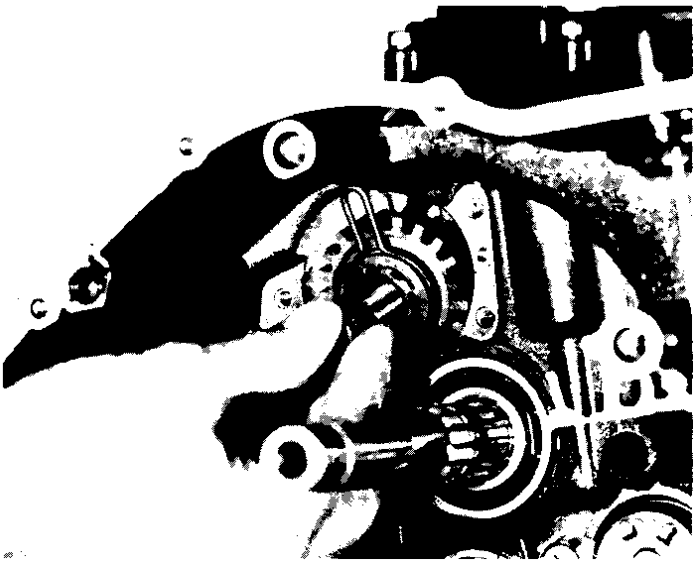

H. Shift Lever, Shift Shaft Removal

1. Remove clip holding shift lever two (2). Remove the lever.

2. Remove clip holding shift shaft lever. Remove shift shaft.

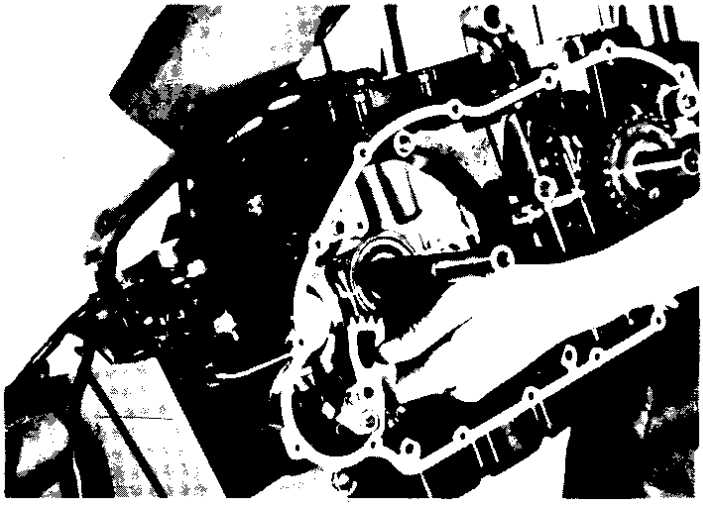

I. Governor Assembly Removal

1. Remove bolt holding crankshaft turning nut from L.H. end of crankshaft.

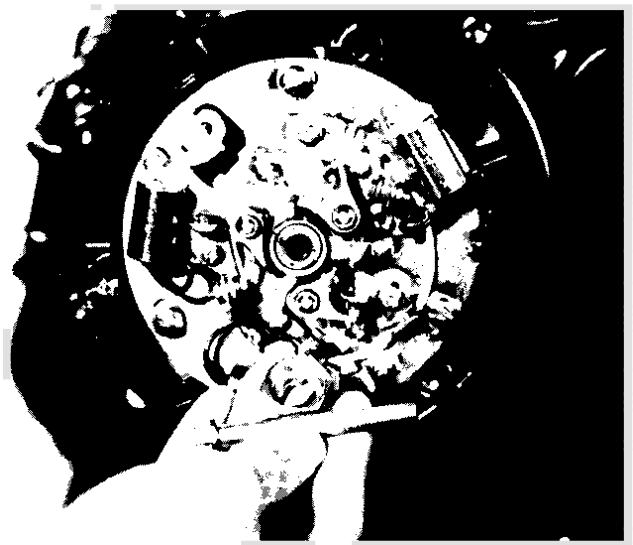

2. Remove neutral light wire. Remove breaker assembly wiring harness from clamps on crankcase. Remove three (3) breaker plate holding screws and remove breaker assembly.

3. Remove governor assembly.

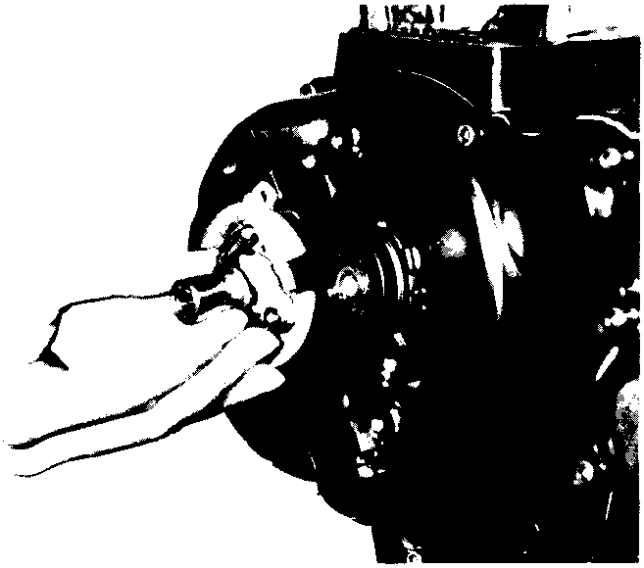

J. Electric Starter Removal

Remove L.H. crankcase cover.

2. Remove idler gear 1 and shaft.

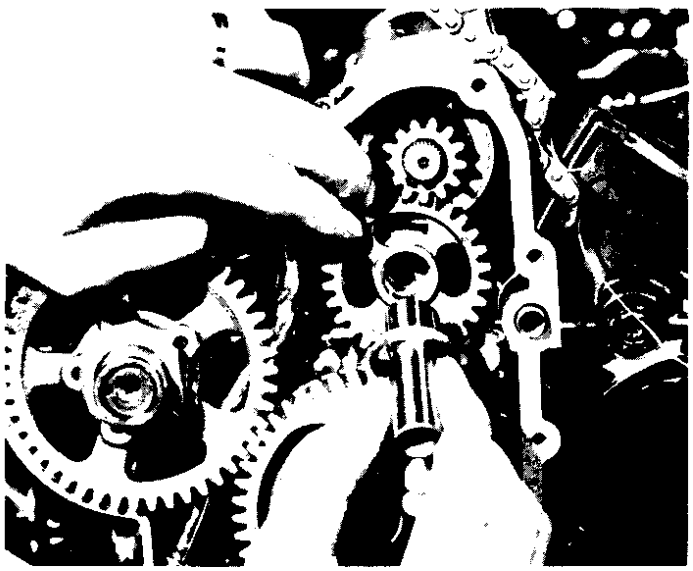

3. Place a folded rag between the kick idler gear two (2) and pump drive gear as shown. Remove pump drive gear nut and gear. Remove cam chain.

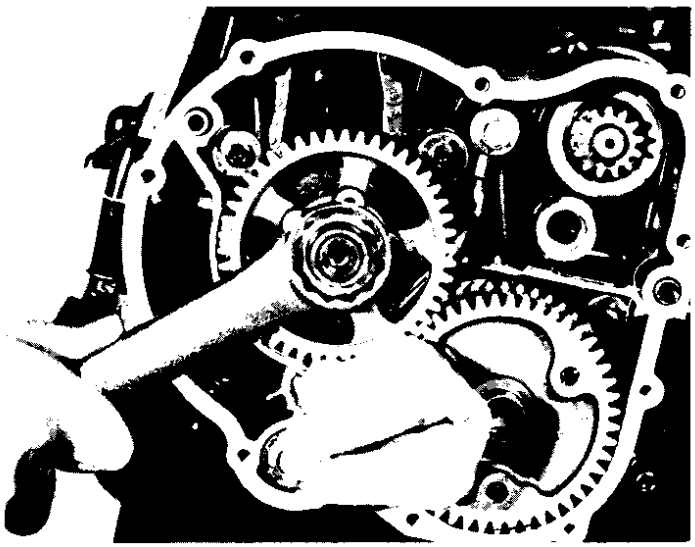

4. Remove starter clutch assembly

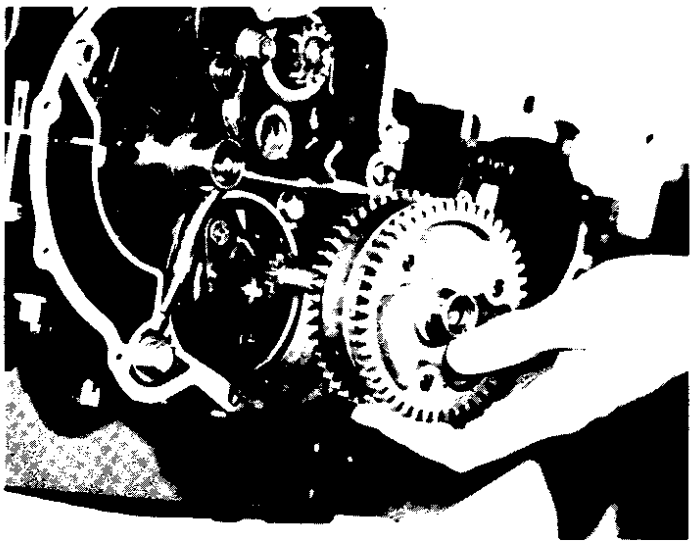

5. Remove oil delivery pipe,

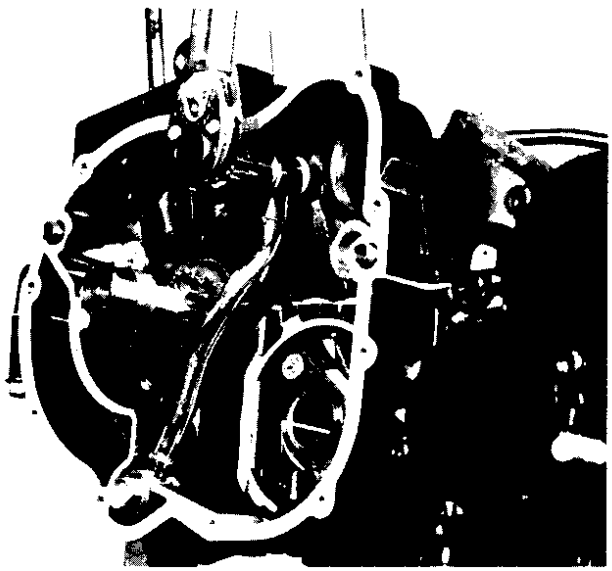

6. Remove cam chain dampers.

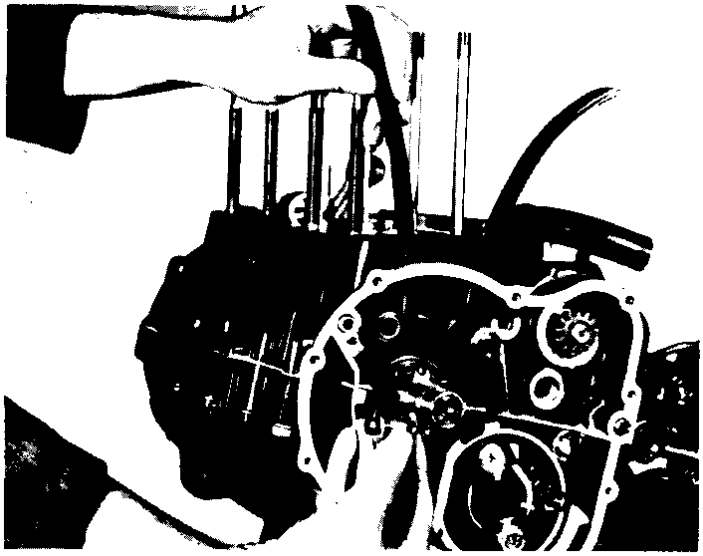

7. Remove two (2) starter motor securing bolts. Remove starter motor.

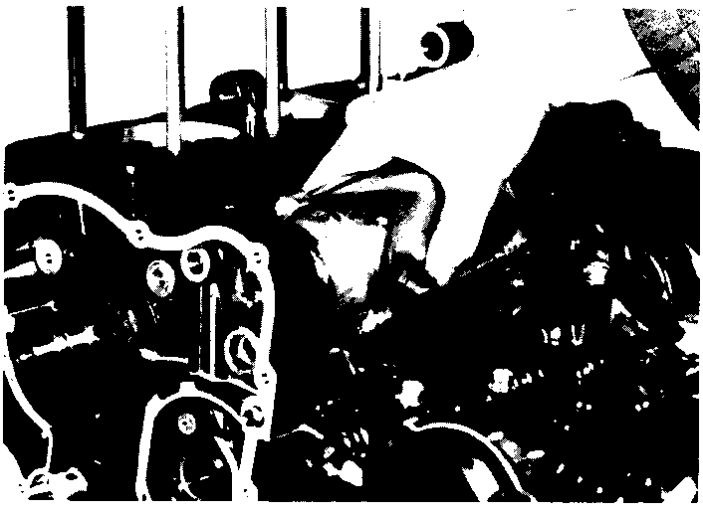

K. Middle Gear Removal

Remove seven (7) middle gear case securing bolts. Remove the middle gear case, drive cam and spring.

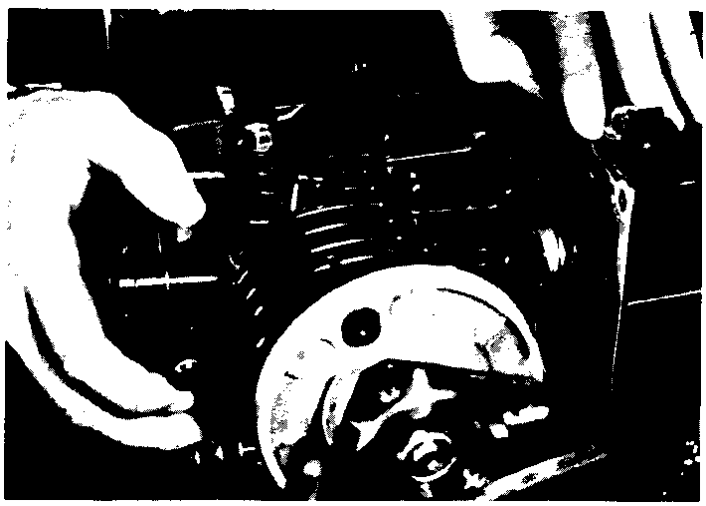

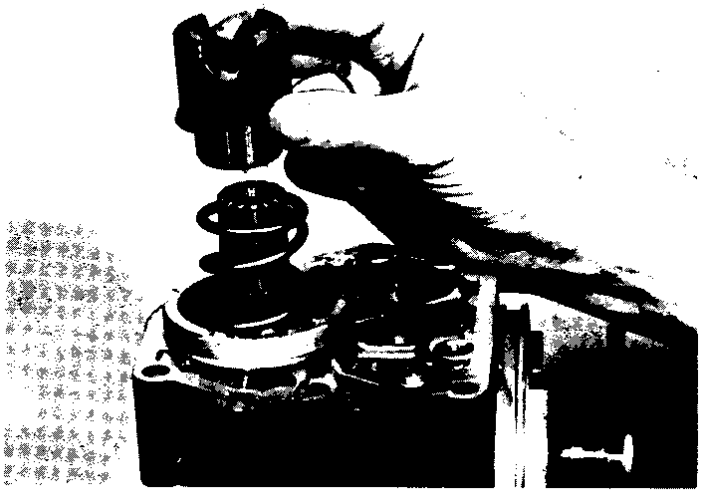

Middle Gear Case Disassembly is covered in the Shaft Drive, Section page 102.

L. Transmission Bearing Housing Removal

Remove the transmission bearing housing bolts. Remove housing.

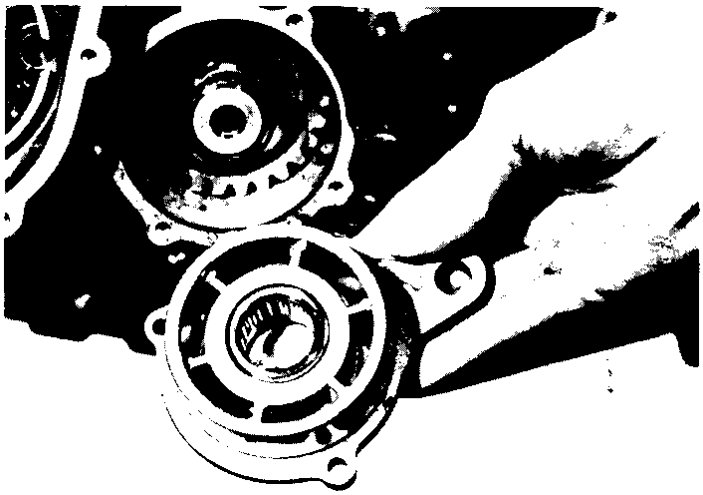

M. Breather Removal

Remove six (6) breather securing bolts. Remove breather.

N. Oil Pump Removal and Disassembly

1. Remove strainer cover.

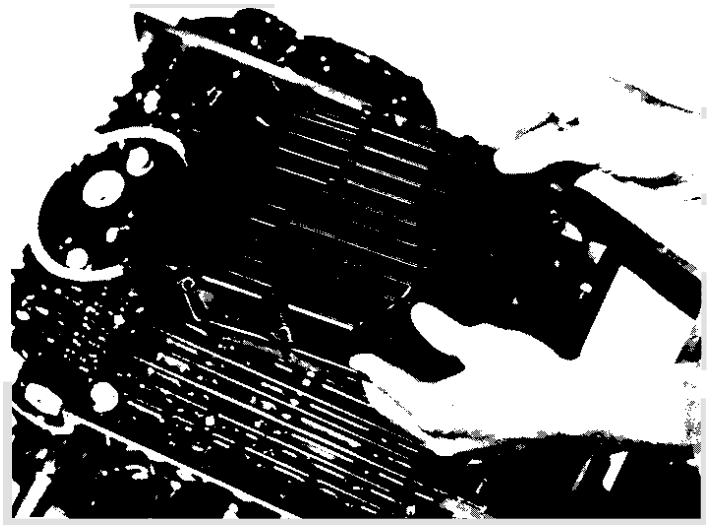

2. Remove oil pump.

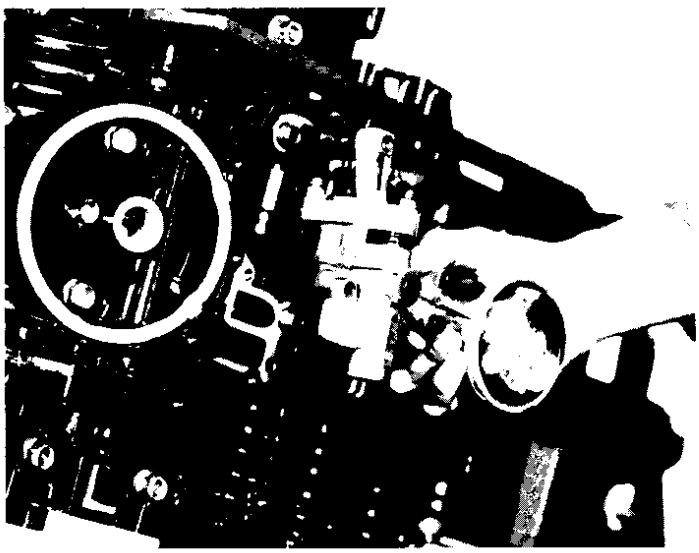

3. Remove oil pump driven gear.

4. Remove oil pump cover and rotor assembly.

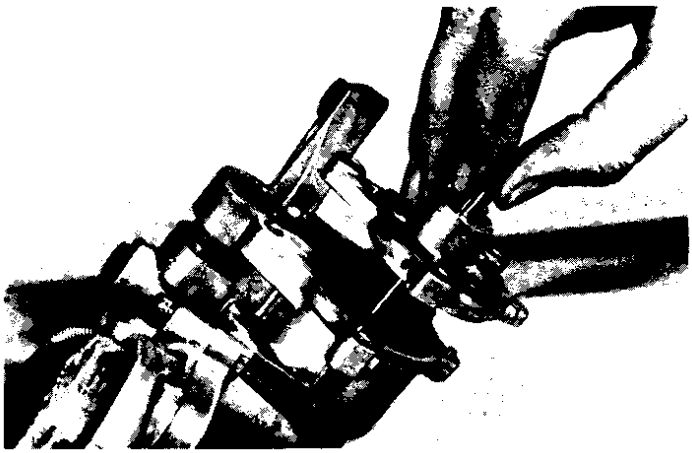

5. Remove pressure relief valve: remove circlip, washer, spring, and plunger.

6. Remove oil pump check valve: remove circlip, plug, spring, and plunger.

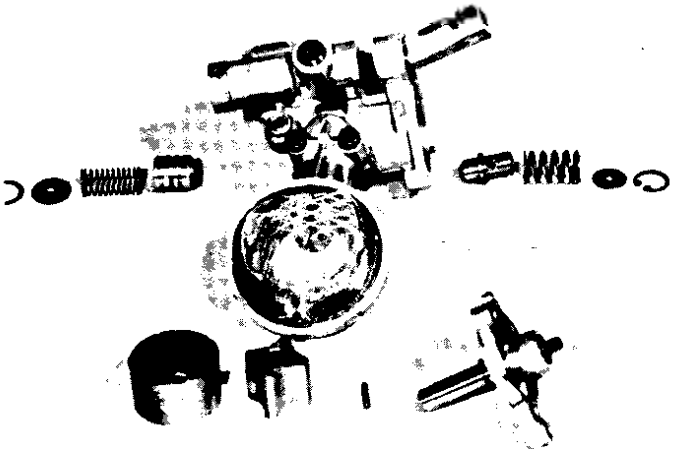

O. Crankcase Disassembly

CAUTION: There is one hidden crankcase holding bolt. This bolt is located near the transmission drive axle, as shown. This bolt must be located before proceeding with crankcase disassembly.

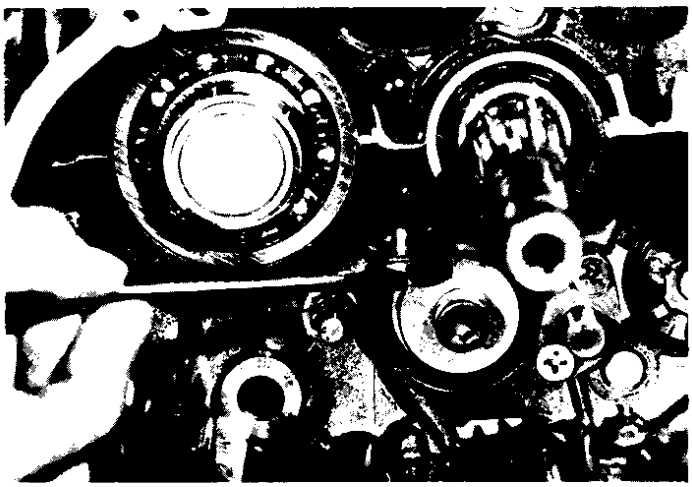

1. Loosen each bolt ½ turn, starting with the unnumbered bolt. Continue by loosening the highest numbered bolts first. The numbers of the bolts are cast in the cases. Numbers 24~15 are on the top case. Numbers 14–1 are on the bottom case.

2. Remove all crankcase holding bolts. Use a soft rubber hammer to carefully separate the crankcases. The crankshaft and transmission shafts should stay in the bottom crankcase.

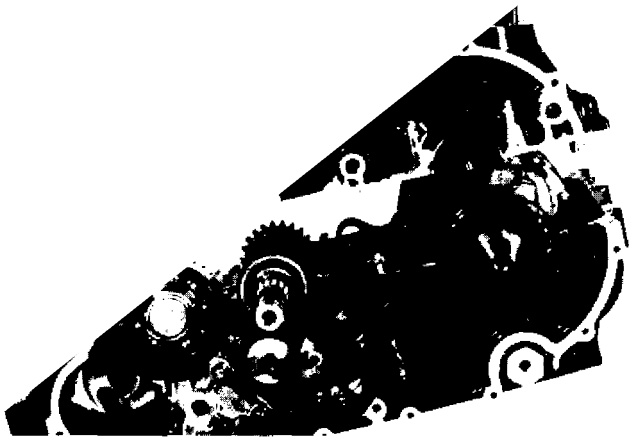

3. Remove crankshaft. Note location of special main bearing **('A'** bearing). This is a combination side thrust bearing and main bearing.

P. Transmission Disassembly

1. Remove middle driven gear.

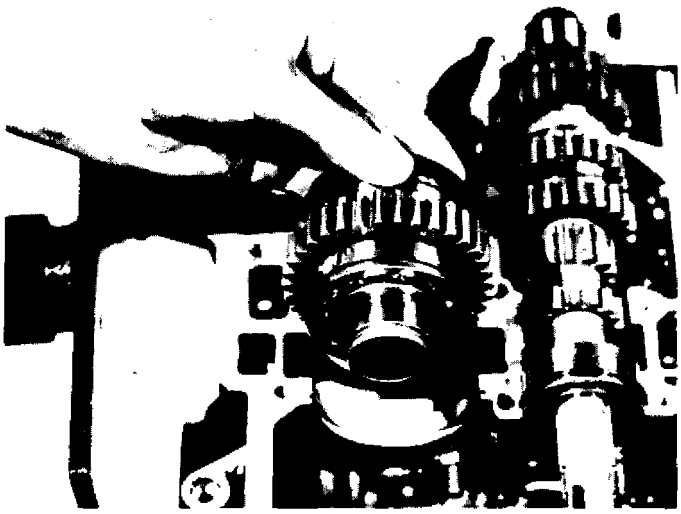

2. Remove shift fork guide bar circlip (E-clip). Remove guide bar.

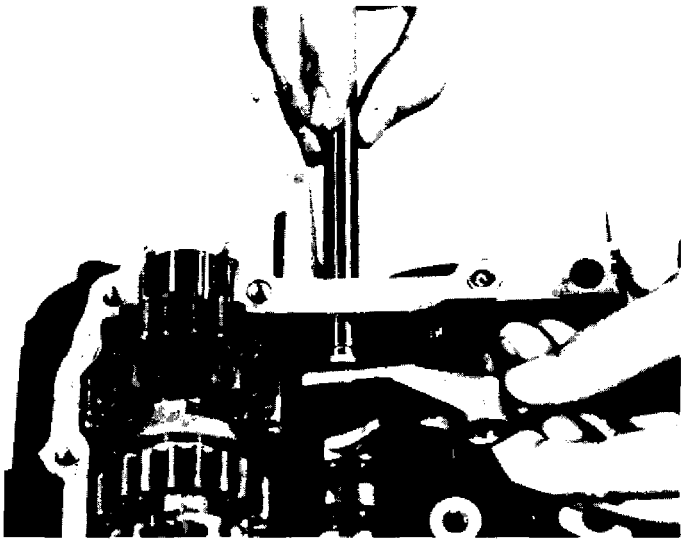

3. Remove main axle assembly.

4. Remove circlip (E-clip) holding shift fork guide two

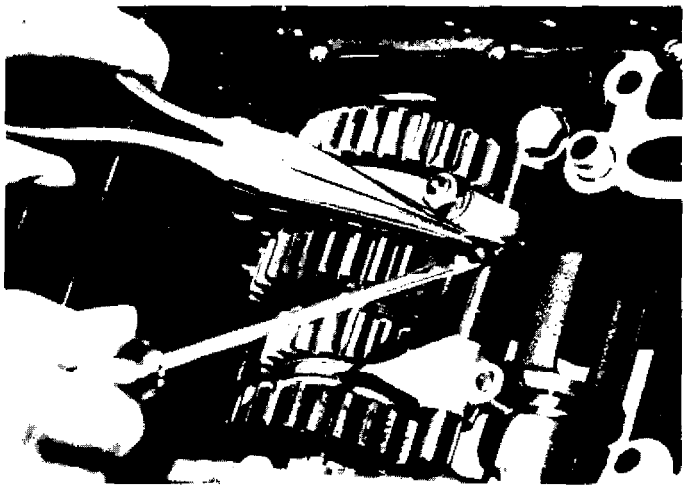

5. Remove guide bar, washer and both shift forks.

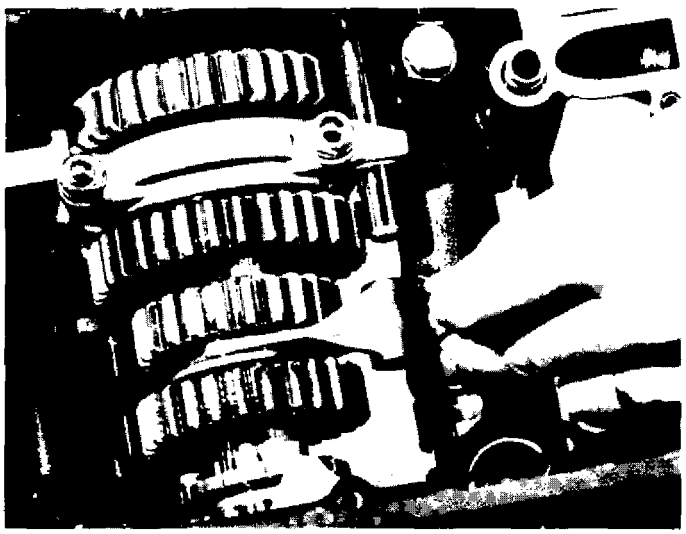

6. Remove bolt holding middle drive gear to drive axle. Remove spacer.

7. Loosen transmission bearing cap nuts ½ turn. Remove nuts and cap.

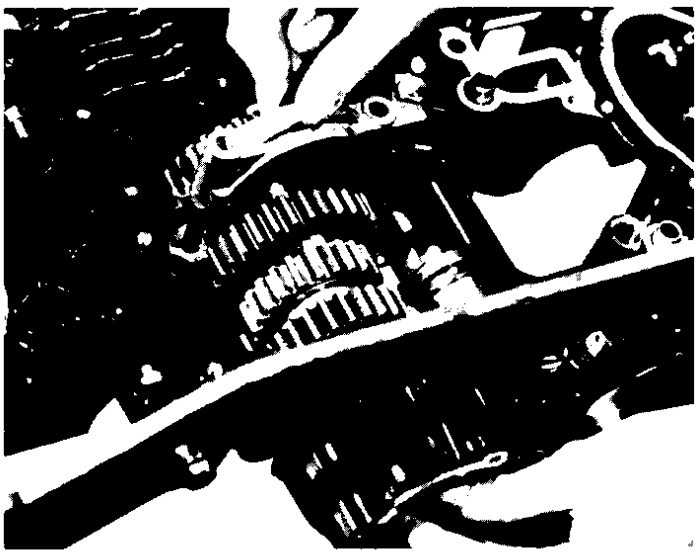

8. Remove middle drive gear. Push drive axle up at the bearing and out so that the middle drive gear can be removed. Remove drive axle.

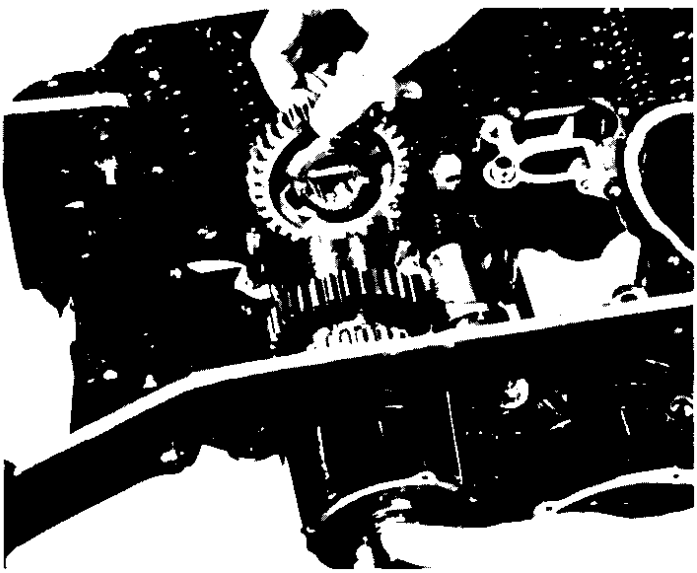

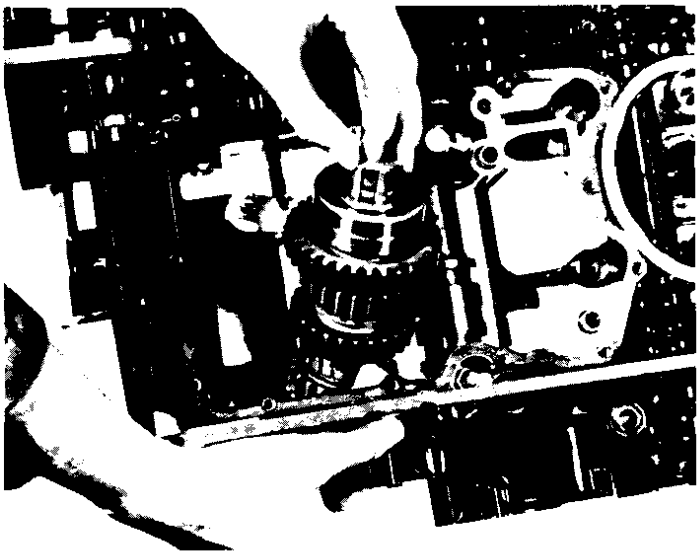

9. Remove shift cam detent and shaft cam securing bolt.

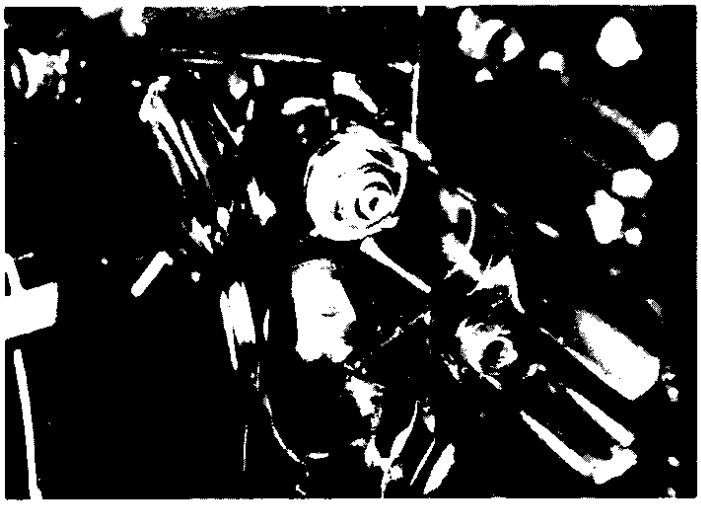

10. Remove circlip on shift cam stopper plate. Remove stopper plate and shift cam.

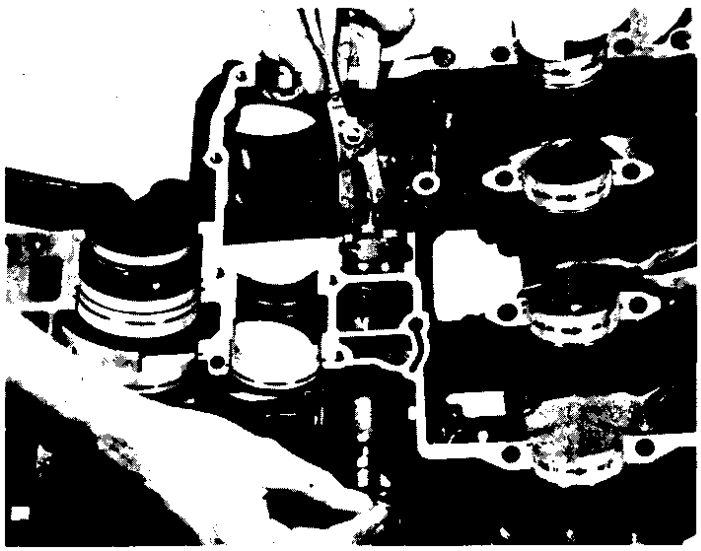

Further disassembly of the transmission shafts can be undertaken after study of the transmission illustration.

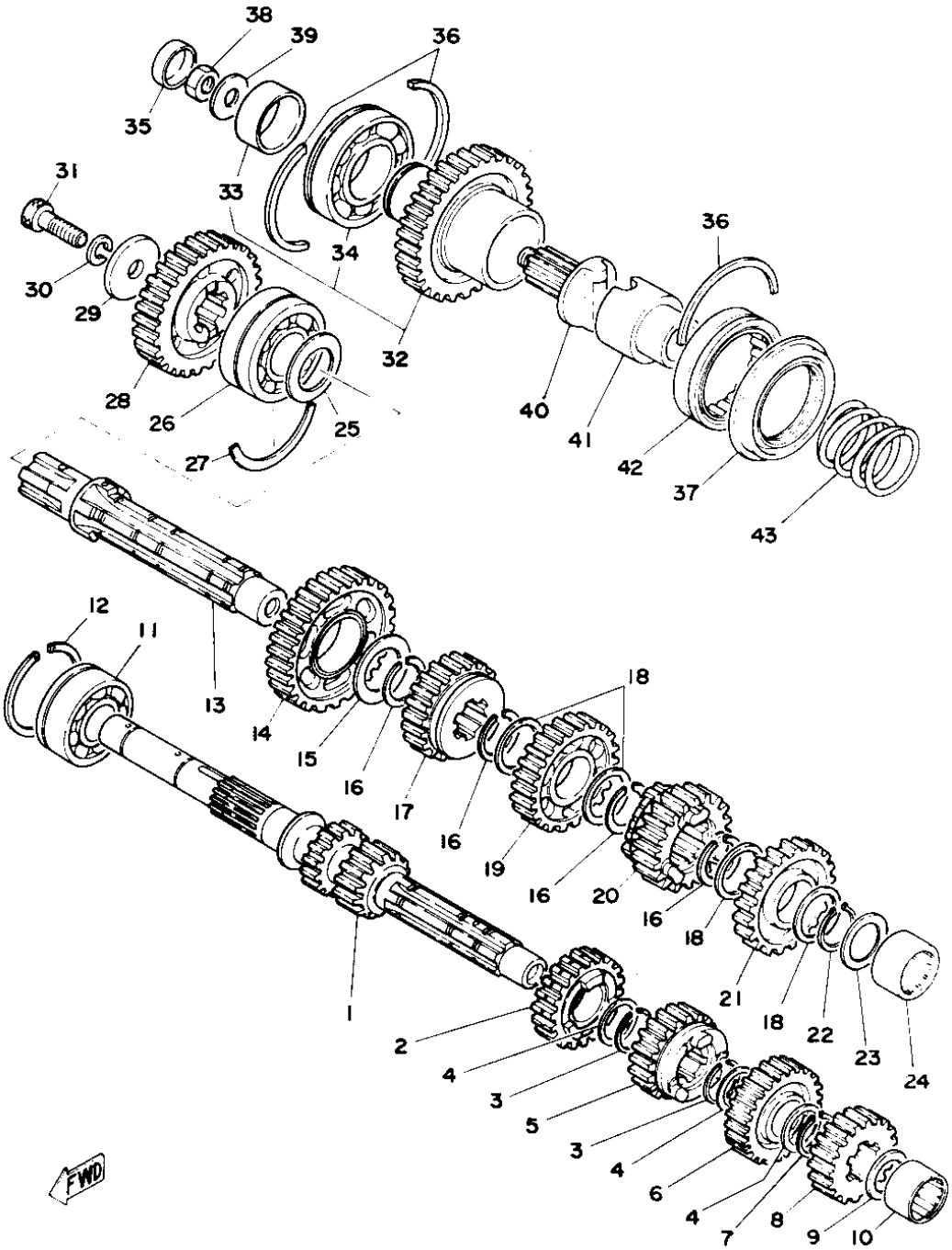

1 AXLE, main (13T)
2 GEAR, 4th pinion (21T)
3 CIRCLIP
4 WASHER, gear hold 5 (25.2-30-1.0)
5 GEAR, 3rd pinion (20T)
6 GEAR, 5th pinion (23T)
7 CIRCLIP (S-25)
8 GEAR, 2nd pinion (17T)
9 SHIM, drive axle
10 BEARING
11 BEARING (B5205 special)
12 CIRCLIP
13 AXLE, drive
14 GEAR, 1st wheel (32T)
15 WASHER, plate (30.2-40-2.0)
16 CIRCLIP
17 GEAR 4th wheel (23T)
18 SHIM
19 GEAR, 3rd wheel (26T)
20 GEAR, 5th wheel (22T)
21 GEAR, 2nd wheel (27T)
22 CIRCLIP (S-30)
23 SHIM, drive axle (24.2-33-1.6)
24 BEARING
25 WASHER, plate (30.2-40-2.0)
26 BEARING (B5206 special)
27 CIRCLIP
28 GEAR, middle drive (32T)
29 WASHER, plate
30 WASHER, spring
31 BOLT, hexagon socket head
32 MIDDLE DRIVEN GEAR COMP. (34T)
33 COLLAR (35-40-16)
34 BEARING (B6207 special)
35 PLUG
36 CIRCLIP
37 OIL SEAL (SW-48.8-72-9)
38 NUT, hexagon
39 WASHER, plate
40 CAM, driven
41 CAM, drive
42 BEARING
43 SPRING, compression

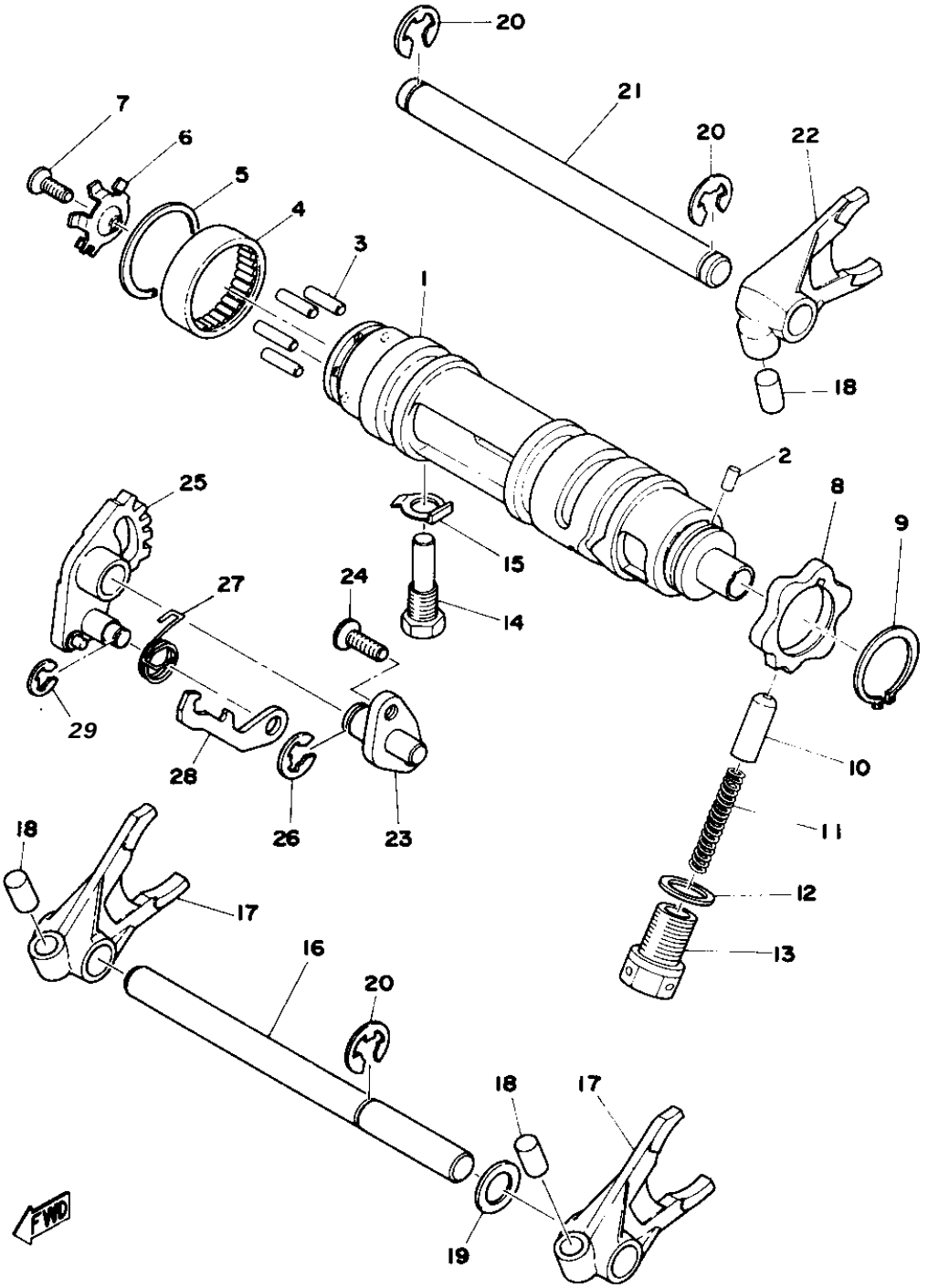

1	CAM, shift	11	SPRING, compression	21	BAR, shift fork guide 2
2	PIN, dowel (4-8)	12	GASKET, drain plug	22	FORK, shift 1
3	PIN, dowel (4-17.8)	13	SCREW	23	SHAFT, shift lever
4	BEARING	14	BOLT	24	SCREW, flat head
5	CIRCLIP (34 ø special)	15	WASHER, lock	25	LEVER, shift 2
6	PLATE, side	16	BAR, shift fork guide 1	26	CIRCLIP (E-9)
7	SCREW, flat head	17	FORK, shift 2	27	SPRING, torsion
8	PLATE, stopper	18	PIN, cam follower	28	LEVER, shift 3
9	CIRCLIP (S-30)	19	WASHER, plate (12-22-1.0)	29	CIRCLIP (E-7)
10	STOPPER, cam	20	CIRCLIP (E-10)		

3-3 INSPECTION AND REPAIR

A. Cylinder Head Cover

Place head cover on a surface plate. There should be no warpage. Correct by re-surfacing as follows:

Place #400 or #600 grit wet sandpaper on surface plate and re-surface head cover using a figure-eight sanding pattern. Rotate head cover several times to avoid removing too much material from one side.

B. Cylinder Head

1. Remove spark plugs.

2. Remove valves.

3. Using a rounded scraper, remove carbon deposits from combustion chamber. Take care to avoid damaging spark plug threads and valve seats. Do not use a sharp instrument. Avoid scratching the aluminum.

4. Place on a surface plate. There should be no warpage. Correct by re-surfacing as follows:

   Place #400 or #600 grit wet sandpaper on surface plate and re-surface head using a figure-eight sanding pattern. Rotate head several times to avoid removing too much material from one side.

C. Valve, Valve Guide and Valve Seat

1. Valve stem wear must be measured and then combined with valve guide measurements to guide clearance. This clearance must be within tolerances. If it exceeds the maximum limit, then replace either or both valve and guide, as necessary.

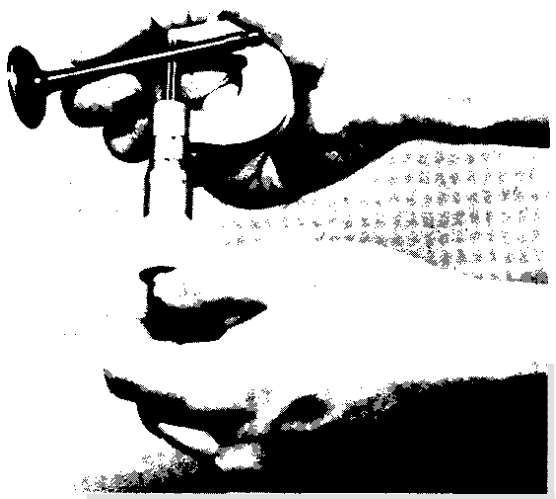

Valve Stem Clearance		Maximum
Intake	.020-.041mm (.0008~.0016")	0.10mm (.004")
Exhaust	.035-.059mm (.0014~.0023")	0.12mm **(.005")**

2. Valve stem end

   Inspect end of valve stem. If the end appears to be "mushroomed" or has a larger diameter than the rest of the stem, the valve, valve guide, and oil seal should be replaced.

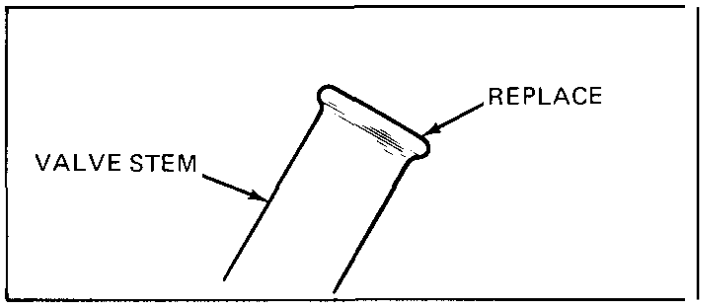

3. Turn valve on a "V" block and measure the amount of stem runout with a dial gauge. If it exceeds the maximum limit, replace the valve.

Maximum Valve Stem Runout:
.03mm (.0012")

4. Valve guide and valve oil seal replacement

   If oil leaks into the cylinder through a valve due to a worn valve guide, or if a valve is replaced, the valve guide should also be replaced.

   NOTE: The valve oil seal should be replaced whenever a valve is removed or replaced.

   a. Measure valve guide inside diameter with a small bore gauge. If it exceeds the limit, replace with an oversize valve guide.

Guide diameter (I.D.):	7.01-7.02mm (.276-.277")	7.10mm (0.280')

   b. To ease guide removal and reinstallation, and to maintain the correct interference fit, heat the head to 100°C (212°F). Use an oven to avoid any possibility of head warpage due to uneven heating.

   c. Use the appropriate shouldered punch (special tool) to drive the old guide out and drive the new guide in.

   NOTE: When a valve guide is replaced, the o-ring should also be replaced.

d. After installing the valve guide, use 7mm reamer (special tool) to obtain the proper valve clearance.

After fitting the valve guide into the cylinder head, be sure to grind the valve seat, and perform valve lapping. The valve must be replaced with a new one.

5. Grinding the valve seat

a. The valve seat is subject to severe wear similar to valve face. Whenever the valve face is re-surfaced, the valve seat should also be re-surfaced at a 45° angle. In addition, if a new valve guide has been installed (without any valve repair), the valve seat should be checked to guarantee complete sealing between the valve face and seat.

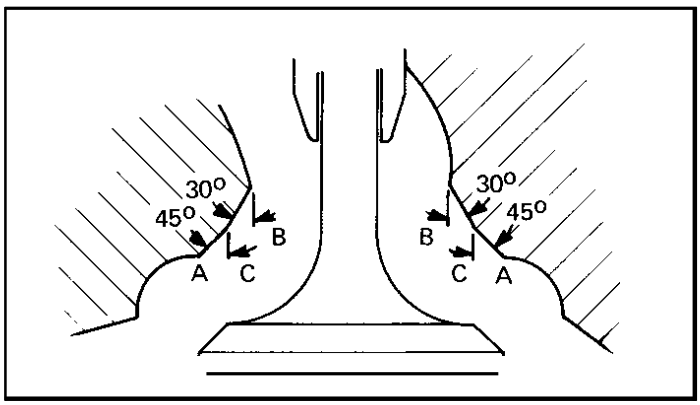

CAUTION: If the valve seat is obviously pitted or worn, it should be cleaned with a valve seat cutter. Use the 45° cutter, and when twisting the cutter, keep an even downward pressure to prevent chatter marks.

If cutting section "A" of the intake valve seat, use "FLAT" cutter (radius cutter). If cutting section "A" of the exhaust valve seat, use "FLAT" cutter (also: radiused). If cutting section "B", use the 45° cutter.

b. Measure valve seat width. Apply mechanic's bluing dye (such as Dykem) to the valve face, apply a very small amount of fine grinding compound around the surface of the valve seat, insert the valve into position, and spin the valve quickly back and forth. Lift the valve, clean off all grinding compound, and check valve seat width. The valve seat will have removed the bluing wherever it contacted the valve face. Measure the seat width with vernier calipers. It should measure approximately 1.3mm (.05"). Also, the seat should be uniform in contact area. If valve seat width varies, or if pits still exist, then continue to cut with the 45° cutter. Remove just enough material to achieve a satisfactory seat.

	Standard Width	Wear Limit
Seat width	1.3mm (.050")	2.0mm (.080)

c. If the valve seat is uniform around the perimeter of the valve face, but is too wide or not centered on the valve face, it must be altered. Use either the "FLAT", 45° or 30° cutters to correct the improper seat location in the manner described below:

1) If the valve face shows that the valve seat is centered on the valve face, but too wide, then lightly use both the "FLAT" and the 30° cutters to reduce the seat width to 1.3mm (.05").

2) If the seat shows to be in the middle of the valve face, but too narrow, use the 45° cutter until the width equals 1.3mm (.05").

3) If the seat is too narrow and right up near the valve margin, then first use the "FLAT" cutter and then the 45° cutter to get the correct seat width.

4) If the seat is too narrow and down near the bottom edge of the valve face, then first use the 30° cutter and then the 45° cutter.

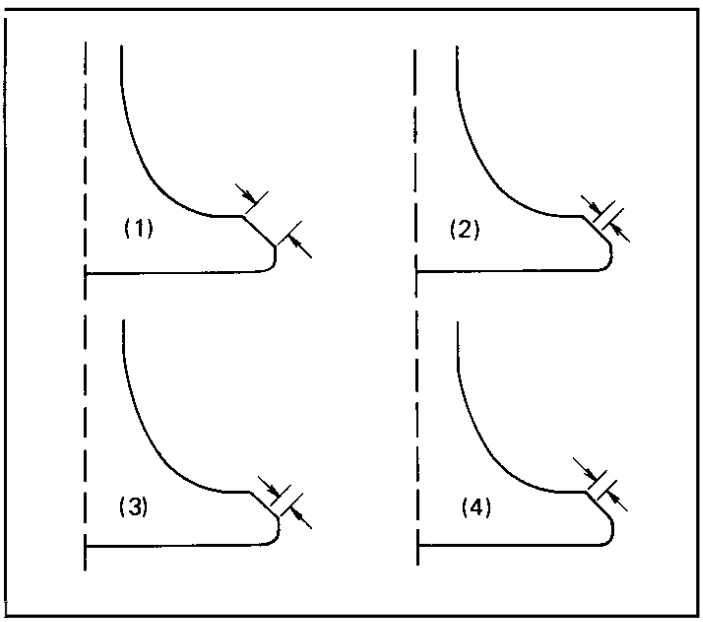

6. Lapping the valve/valve seat assembly

a. The valve/valve seat assembly should be lapped if (1) neither the seat nor the valve face are severely worn, or (2) if the valve face and valve

seat have been re-surfaced and now require a final light grinding operation for perfect sealing.

b. Apply a small amount of coarse lapping compound to valve face. Insert the valve into the head. Rotate the valve until thevalveandvalve seat are evenly polished. Clean off the coarse compound, then follow the same procedure with fine compound,

Continue lapping until the valve face shows a complete and smooth surface all the way around. Clean off the compound material. Apply bluing dye to the valve face and rotate the valve face for full seat contact which is indicated by a shiny surface all around the valve face where the bluing has been rubbed away.

c. Valve leakage check

After all work has been performed on the valve and valve seat, and all head parts have been assembled, check for proper valve/valve seat sealing by pouring solvent into each of the intake ports, then the exhaustports. There should be no leakage past the seat. If fluid leaks, disassemble and continue to lap with fine lapping compound. Clean all parts thoroughly, reassemble and check again with solvent. Repeat this procedure as often as necessary to obtain a satisfactory seal.

D. Valve Spring and Lifters

1. Checking the valve springs

a. This engine uses two springs of different sizes to prevent valve float or surging. The chart below shows the basic value characteristics.

b. Even though the spring is constructed of durable spring steel, it gradually loses some of it's tension. This is evidenced by a gradual shortening of free length. Use a vernier caliper to measure spring free length. If the free length of any spring has decreased more than 2mm (.080") from its specification, replace it.

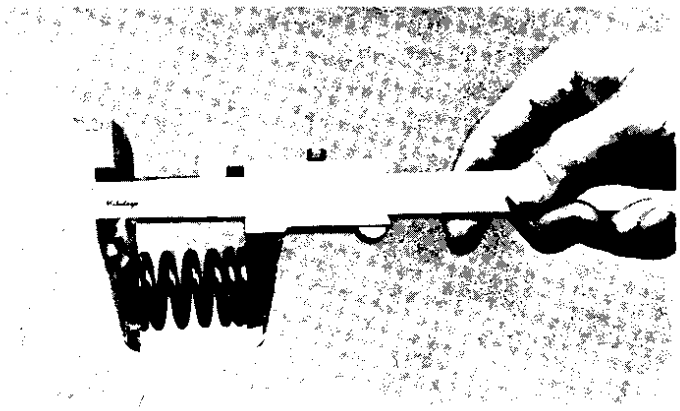

c. Another symptom of a fatigued spring is insufficient spring pressure when compressed. This can be checked using a valve spring compression rate gauge. Test each spring individually. Place it in the gauge and compress the spring first to the specified compressed length with the valve closed (all spring specifications can be found in the previous section, Valve Spring), then to the length with the valve open. Note the poundage indicated on the scale at each setting. Use this procedure with the outer springs, then the inner springs.

NOTE: All valve springs must be installed with greater pitch upward as shown.

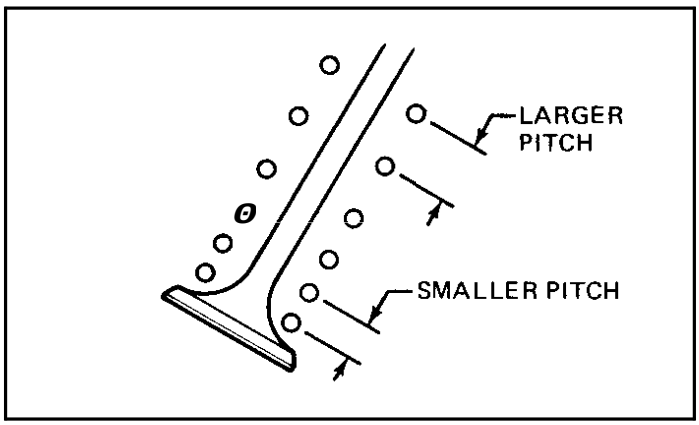

	OUTER	INNER
Free length	39.9mm (1.571")	35.6mm (1.402")
Installed length (valve closed)	34.5mm (1.358")	31.5mm (1.240")
Installed pressure	16.27~18.73 kg (35.9~41.3 lb)	6.75~8.25 kg (14.9~18.2 lb)
Compressed length (valve open)	26.0mm (1.024")	23.0mm (.908")
Compressed pressure	49.29~56.71 kg (108.7~125 lb)	25.57~29.43 kg. (56.4~64.9 lb)
Allowable tilt from vertical	1.6mm (.063") or 2.5°	

2. Valve lifter

a. Check each valve lifter for scratches or other damage. If the lifter is damaged in any way, the cylinder head surface in which it rides is probably also damaged. If the damage is severe, it may be necessary to replace both the lifter and the cylinder head.

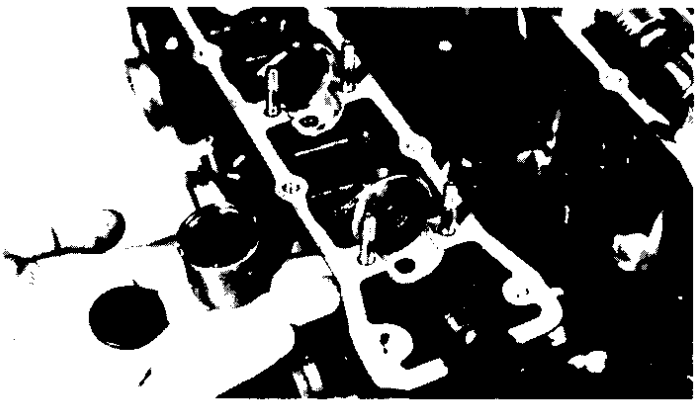

NOTE: For proper valve lifter-to-head clearance, always install lifters on their original valves.

E. Camshafts, Cam Chain and Cam Sprockets

1. Camshaft

a. The cam lobe metal surface may have a blue discoloration due to excessive friction. The metal surface could also start to flake off or become pitted.

NOTE: The exhaust cam appears darker than the intake cam. This is due to a special hardening process and is not due to excessive enaine heat.

b. If any of the above wear conditions are readily visible, the camshaft should be replaced.

c. Even though the cam lobe surface appears to be in satisfactory condition, the lobes should be measured with a micrometer. Cam lobe wear can occur without scarring the surface. If this wear exceeds a pre-determined amount, valve timing and lift are affected. Replace the camshaft if wear exceeds the limits.

d. Install the camshaft on the cylinder head. Place a strip of Plastigauge between camshaft and camshaft cap as illustrated (lengthwise along camshaft). Tighten the nuts with specified torque. Remove the camshaft cap and determine the clearance by measuring the width of the flattened Plastigauge.

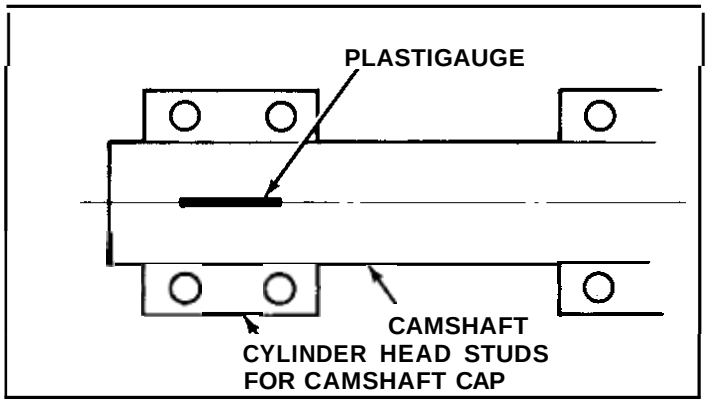

Cap Nut Tightening Torque:
0.8~1.0 m-kg (5.8~7.2 ft-lbs)

NOTE: Do not turn camshaft when measuring clearance with Plastigauge.

Camshaft-to-cap Clearance:
Standard: .020~.054mm (.0008~.0021")
Maximum: 0.160mm (.006")

If camshaft-to-cap clearance exceeds specification, measure camshaft bearing surface diameter.

Bearing Surface Diameter:
Standard:24.97~24.98mm (0.9830~0.9835")

1) If camshaft diameter is less than specification, causing excessive clearance, replace camshaft.

2) If camshaft is within specification and camshaft-to-cap clearance is excessive, replace cylinder head.

2. Cam Chain

Except in cases of oil starvation, the cam chain wears very little. If the cam chain has stretched excessively and it is difficult to keep the proper cam chain tension, the chain should be replaced.

3. Cam Sprockets

Check cam sprockets for obvious wear. Examine damping rubber on sides of cam sprockets. If the damping rubber is disintegrating, the sprocket should be replaced. Damaged

or disintegrating damping rubber will contaminate the engine oil and will lead *to* excessive engine noise.

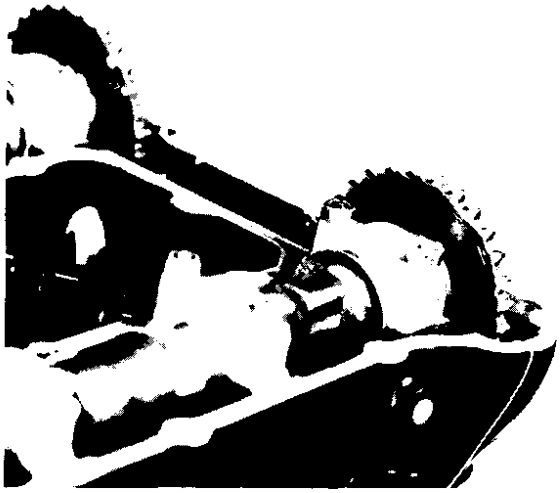

4. Cam Chain Dampers

Inspect the top cam chain damper (stopper guide) and two **(2)** vertical (slipper-type) dampers for excessive wear. Any that shows excessive wear should be replaced. Worn dampers may indicate an improperly adjusted or worn-out cam chain.

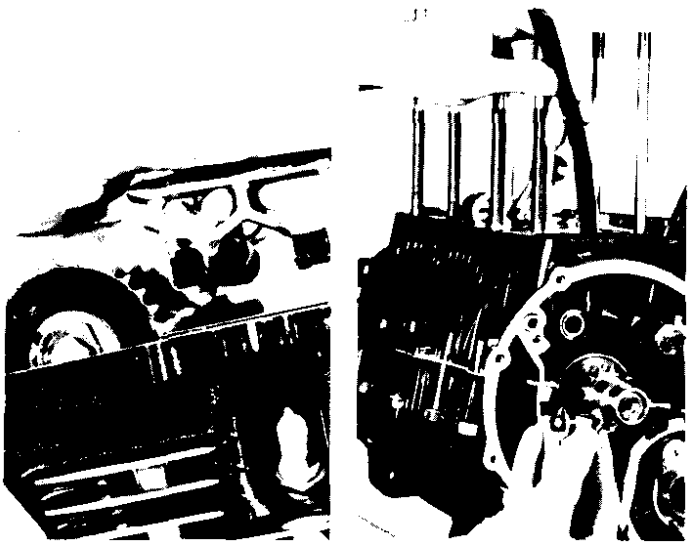

F. Cylinder

1. Inspect the cylinder walls for scratches. If vertical scratches are evident, the cylinder wall should be rebored or the cylinder should be replaced.

2. Measure cylinder wall wear as shown. If wear is excessive, compression pressure will decrease. Rebore the cylinder wall and replace the piston and piston rings.

Cylinder wear should be measured at three depths with a cylinder bore gauge. (See illustration.)

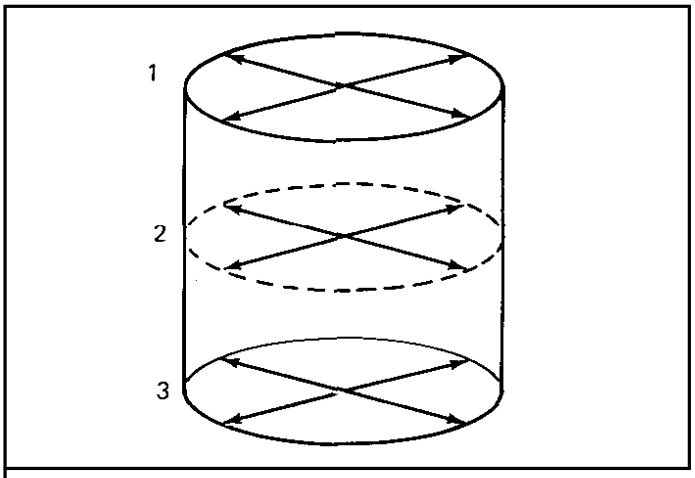

	Standard	Wear Limit
Cylinder bore	68.00~68.02mm (2.677~2.678 in.)	68.10mm (2.681 in.)
Cylinder taper	--------	0.05mm (0.002 in.)
Cylinder out-of-round	--------	0.05mm (0.002 in.)

If the cylinder wall is worn more than wear limit, it should be rebored.

G. Piston And Piston Rings

1. Piston

a. Measure the outside diameter of the piston at the piston skirt.

Measurement should be made at a point l0mm in.) above the bottom edge of the piston. Place the micrometer at right angles to the piston pin.

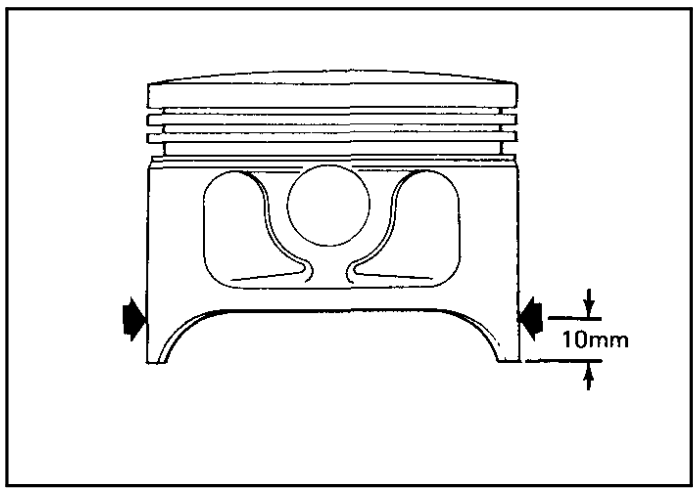

	Size
Standard	**67.96mm** **67.97mm**
Oversize 1	**68.25mm**
Oversize 2	**68.50mm**
Oversize 3	**68.75mm**
Oversize 4	**69.00mm**

b. Determine piston clearance as follows:

Minimum bore measurement – Maximum Diston measurement = Piston clearance

EXAMPLE:

68.02mm
– **67.97mm**
= **.05mm** piston clearance

c. Piston ring/ring groove fit must have correct clearance. If the piston and ring have already been used, the ring must be removed and the ring groove cleaned of carbon. The ring should then be reinstalled. Use a feeler gauge to measure the gap between the ring and the land.

Side clearance	Top	0.04-0.08mm **(0.0016—0.003** in.)
	2nd	0.03-0.07mm (0.0012**—0.0028** in.)

2. Piston Ring

a. The oversize top and middle ring sizes are stamped on top of the ring.

Oversize 1	0.25mm
Oversize 2	0.50mm
Oversize 3	0.75mm
Oversize 4	1.00mm

b. The expander spacer of the bottom ring (oil control ring) is color-coded to identify sizes. The color mark is painted on the expander spacer.

Size	Color
Oversize 1	Brown
Oversize 2	Blue
Oversize 3	Black
Oversize 4	Yellow

c. Push the ring into the bore and check end gap clearance with a feeler gauge.

NOTE: The end gap on the expander spacer of the oil control ring is unmeasureable. If the oil control ring rails show excessive gap, all three components should be replaced.

	Standard	Limit
Top/2nd ring	0.2~0.4mm **(.008~.016** in.)	0.80mm **(0.03** in.)
Oil control (Rails)	**0.2~0.9mm** **(0.008~0.035 in.)**	Visual inspection

H. Piston Pin

1. Apply a light film of oil to pin. Install in connecting rod small end. Check for play. There should be no noticeable vertical play. If play exists, check connecting rod small end for wear. Replace pin and connecting rod as required.

2. The piston pin should have no noticeable free play in piston. If the piston pin is loose, replace the pin andlor the piston.

I. Crankshaft

1. Crankshaft Run-Out

Support the crankshaft at both ends on V-blocks. Measure the amount of crankshaft run-out on the main bearing journals with a dial gauge while rotating crankshaft.

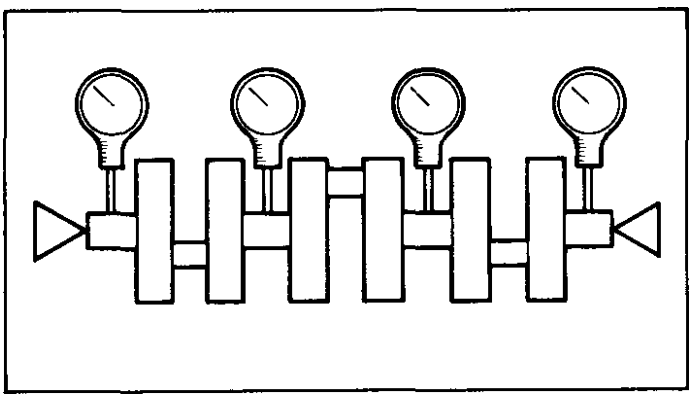

Run-out limit: .03mm (.001 in.)

If run-out exceeds limit, replace crank.

2. Inspection Of Inserts

Check the bearing inserts. If the inner orouter surface is burned, flaked, rough, scratched or worn, the insert should be replaced.

3. Measuring Main Bearing Oil Clearance

a. Clean all crankshaft and crankcase journal surfaces.

b. Place upper crankcase half upside-down on a bench. Install bearing inserts into top crankcase.

c. Install crankshaft into upper crankcase.

d. Place Plastigauge on crankshaft journal surface to be inspected.

NOTE: Do not move crankshaft until clearance check has been completed.

e. Install bearings inserts into bottom crankcase. Carefully, place lower crankcase onto upper crankcase.

f. Install crankcase holding bolts 1 through 10. Tighten to full torque in torque sequence cast on crankcase.

g. Remove bolts in reverse assembly order (10,9,8.. . . .etc.)

h. Carefully remove lower crankcase. Measure width of Plastigauge on crankshaft journals to determine clearance.

Main bearing oil clearance:
.022~.044mm
(.0008~.0017 in.)

4. Crankshaft Main Bearing Selection

a. Numbers used to indicate crankshaft journal sizes are stamped on the L.H. crank web. The first four (4) are main bearing journal numbers, starting with the left journal and proceding to left center, right center, and right. The three **(3)** rod bearing journal numbers follow in the same sequence.

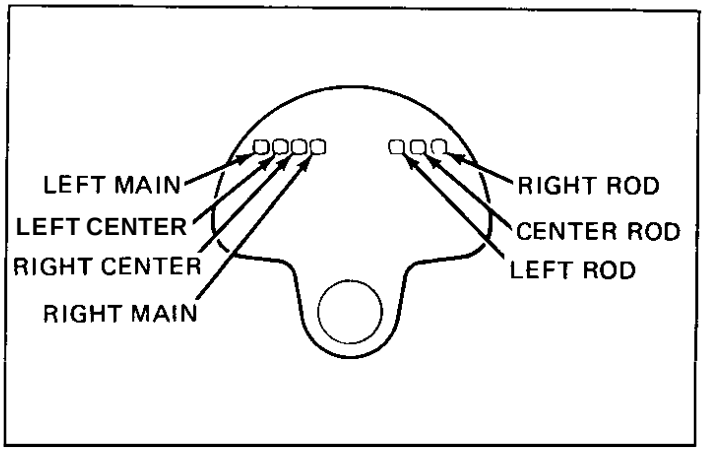

b. Each main bearing journal is numbered 1, 2 or **3.** Each crankcase bearing housing is numbered 4, 5 or 6. The proper insert selection is made by subtracting the crankcase number from the crankshaft journal number. The result is the insert size (number).

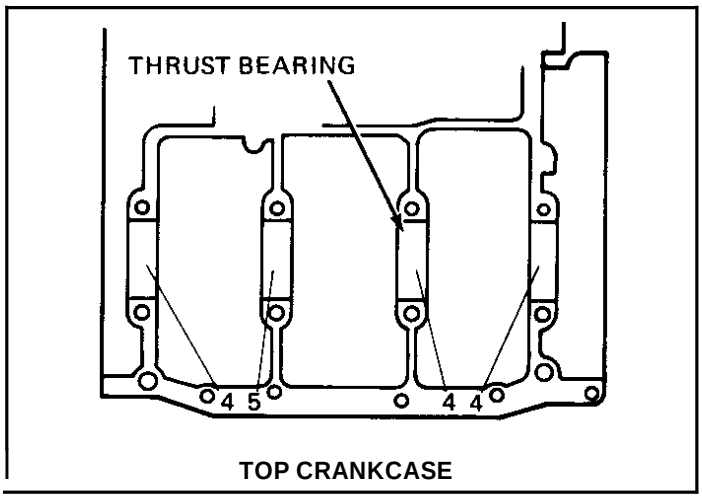

TOP CRANKCASE

Use the color code table to choose the proper insert.

INSERT COLOR CODE

No. 1	Blue
No. 2	Black
No. **3**	Brown
No. 4	Green
No. 5	Yellow

EXAMPLE:

Case No. (Minus) Journal No. = Insert No.

4 – 2

No. 2 insert is Black. Use a black main bearing insert.

NOTE: There is a special thrust bearing (insert) located in the No. 3 main bearing housing in the upper crankcase. The function of this insert is to provide a bearing surface for crankshaft side thrust.

c. When assembling, apply a liberal coat of motor oil to all bearing surfaces.

d. Observe normal crankcase holding bolt torque sequence.

J. Connecting Rod

1. Remove rod cap securing nuts, rod cap and inserts.

2. Inspection

a. Examine bearing inserts for scratches, flaking or other obvious signs of wear or damage. If the inner or outer surfaces are worn or damaged, the inserts should be replaced.

b. Examine the connecting rods and crankshaft.

3. Measure Rod Bearing Clearance

Measurement of rod bearing clearance is similar to main bearing clearance measurement.

a. Clean all bearing surfaces.

b. Place a piece of Plastigauge on connecting rod cap. Place cap on crankshaft journal. Do not allow the cap to move. Install special bolts and apply molybdenum grease to the threads. Install rod cap and nuts. Tighten rod caps evenly to specified torque:

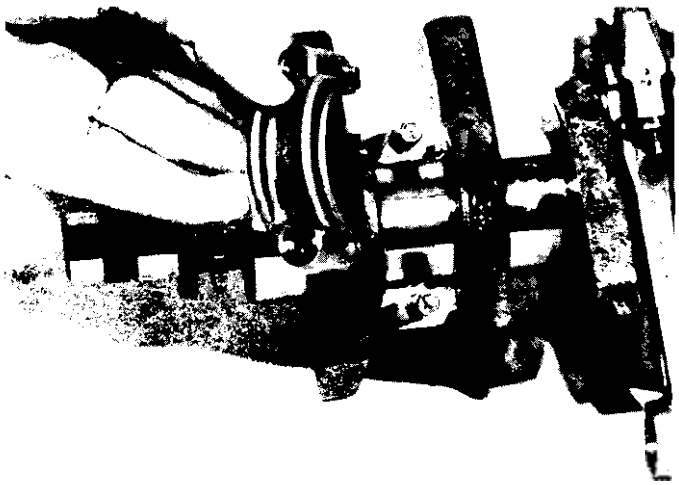

Rod cap torque: 3.8 kg-m (27 ft-lbs)

c. Remove connecting rod and cap. Measure width of Plastigauge to determine oil clearance.

Oil clearance (rod): .032~.054mm (.001~.002 in.)

d. Remove Plastigauge from bearing surfaces.

4. Selecting Rod Bearing Inserts

a. Connecting rod size numbers are indicated by 4. 5 or 6 and are marked in ink on the connecting rods and caps.

b. The rod bearing journal size numbers are indicated by 1, 2 or 3 and are stamped on the left end of the crankshaft,

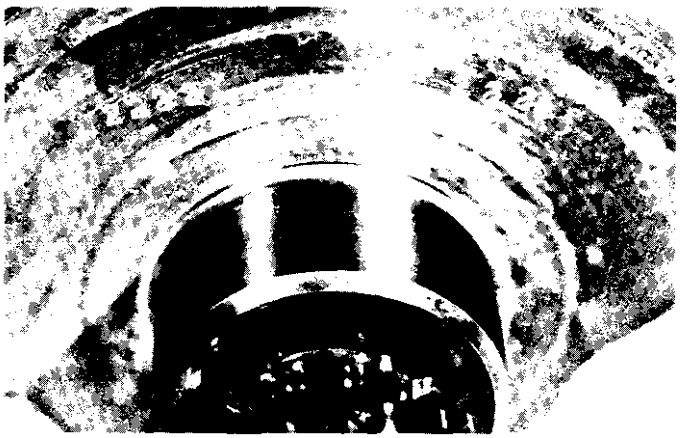

c. The proper insert selection is made by subtracting the rod size number from the crankshaft journal number. Use the color code to choose the proper insert.

Rod No. (Minus)		Journal No.	=	Insert No.
5	–	2	=	3
No. 3 insert is Brown. Use brown bearing inserts.				

EXAMPLE:

INSERT COLOR CODE

No. 1	Blue
No. 2	Black
No. 3	Brown
No. 4	Green
No. 5	Yellow

d. When assembling, apply a liberal coat of motor oil to all bearing surfaces.

NOTE: When applying final torque to the rod caos. Observe the following procedures:

Apply molybdenum disulfide grease to connecting rod bolt threads. Apply torque evenly to both ends of the cap. While tightening, if a torque of 3.3 m-kg (24 ft-lbs) or more is reached, DO NOT STOP tightening until final torque is reached. If tightening is interrupted between 3.3 m-kg and 3.8 m-kg, loosen the nut to less than 3.3 m-kg and start again. Tighten to full torque specification without pausing.

K. OIL PUMP

1. Check the clearance between housing and outer rotor.

Standard clearance: 0.09~0.015mm (0.0035~0.0059 in.)

2. Check the clearance between outer rotor and inner rotor.

Standard clearance: 0.03~0.09mm (0.0011~0.0035 in.)

3. Remove the relief valve and check valve plungers from oil pump assembly. Check the plungers for scratches and wear.

L. PRIMARY DRIVE

1. "Hy-Vo" Chain And Primary Gears

The "Hy-Vo" primary chain is a plate-and-pin type that does not use rollers as in the case *of* a conventional motorcycle drive chain. The plates of the chain form a mating surface for the primary gear teeth. That is, the primary gears actually mesh with the chain plates. This chain is extremely durable and, under normal conditions, can be expected to last the life of the motorcycle engine. However, if obvious damage is caused through serious oil starvation or abrasive oil contamination, the chain should be replaced.

2. Clutch Damper

a Remove circlip using a press and special tool. Press tool on collar no more than necessary to remove circlip. Damper springs may be damaged if excessive pressure is applied.

b. Inspect damper cam and pin surfaces. Check for smooth cam action (as illustrated by arrows). Check for excessive wear on cam and pin surfaces. If operation is not smooth or cam surfaces are severely worn, replace damper assembly.

c. Inspect plate washer and thrust bearing for wear or damage. Replace as necessary.

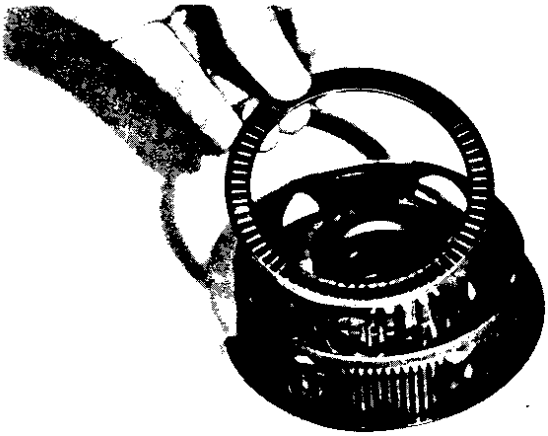

d. Damper Reassembly

1) Install thin plate washer, thrust bearing and thick plate washer in that order.

2) Install damper springs.

3) Install collar.

4) Use press and special tool to install circlip.

CAUTION: When installing circlip, the damper pin must be positioned in the center of the damper cam. Damage to the damper assembly could result from improper positioning.

3. Clutch Housing

a. Check dogs on clutch housing. Look for cracks and signs of galling on edges. If damage is moderate, deburr. If severe, replace clutch housing.

NOTE: Galling on the friction plate dogs of the clutch housing will cause erratic clutch operation.

b. Apply a thin film of oil to transmission main shaft and inside surface of clutch housing. Slip clutch housing over main shaft.

4. Clutch Boss

b. The clutch boss contains a built-in damper beneath the first clutch plate (clutch plate 2). It is not normally necessary to remove the circlip and disassemble the built-in damper unless there is serious clutch chattering.

b. Check splines on clutch boss for galling. If damage is slight to moderate, deburr. If it is severe, replace clutch boss.

NOTE: Galling on clutch plate splines will cause erratic clutch operation.

5. Friction and Clutch Plates

Check clutch steel plates and friction plates for heat damage. Measure friction plate thickness at 3 or 4 points. Measure clutch plates for warpage with a dial gauge and stand. Replace clutch plate or friction plates as a set if any is faulty or beyond wear limits.

	Standard	Wear Limit
Friction plate thickness	3.0mm (0.12 in.)	2.8mm (0.11 in.)
Clutch plate warp limit		0.05mm (0.002 in.)

6. Clutch Push Rod

Check ends of clutch push rod for indentation. If severe, clutch adjustment may be difficult. Check for looseness of the steel ends of the push rod. If ends are loose or indented, replace push rod.

7. Clutch Springs

Measure clutch spring free length. Replace springs as a set if any is less than minimum free length.

Clutch spring minimum length:
4.15mm (1.63 in.)

M. Transmission

1. Inspect each shift fork for signs of galling on gear contact surfaces. Check for bending. Make sure each fork slides freely on its guide bar.

2. Roll the guide bars across a surface plate. If any bar is bent, replace.

3. Check the shift cam grooves for signs of wear or damage. If any profile has excessive wear and/or damage, replace cam.

4. Check the cam followers on each shift fork for wear. The follower should fit snugly into its seat in the shift fork, but should not be overly tight. Check the ends that ride in the grooves in the shift cam. If they are worn or damaged, replace followers.

5. Check shift cam dowel pins and side plate for looseness, damage or wear. Replace as required.

6. Check the shift cam stopper plate and circlip and stopper for wear. Replace as required.

7. Check the transmission shafts using acentering device and dial gauge. If any shaft is bent beyond specified limit, replace shaft.

Maximum run-out:
.03mm (.001")

8. Carefully inspect each gear. Look for signs of obvious heat damage (blue discoloration). Check the gear teeth for signs of pitting, galling or other extreme wear. Replace as required.

9. Check to see that each gear moves freely on its shaft.

10. Check to see that all washers and clips are properly installed and undamaged. Replace bent or loose clips and bent washers.

11. Check to see that each gear properly engages its counterpart on the shaft. Check the mating dogs for rounded edges, cracks, or missing portions. Replace as required.

N. Starter Drives

1. Electric Starter Clutch And Gears

a. Check pin contact surface of idle gear (2) for pitting or other damage. If severe, replacegear.

b. Check spring caps and springs for deformation or damage. If severe, replace as necessary.

c. Check starter clutch bolt (allen screw) for looseness. If loose, remove bolt and replace with new bolt. Apply Loctite to threads and tighten to specified torque. Stake over end of bolts in oil pump driven gear (1).

Starter clutch bolt torque:
2.8~3.2 m-kg (20~23 ft-lbs)

2. Kick Starter

a. Kick Gears

1) Check the kick gears for wear or scratches on teeth, particularly in the chamfered area of each gear.

b. Kick Clip Spring

1) The kick clip is fitted to kick gear (5) and slides in the groove. A too-tight or loose-fitting clip may result in improper operation. If too loose, bend the kick clip so that the friction increases, or replace clip.

O. Crankcases and Strainer Cover

1. Check crankcases for cracks or other damage.

2. Clean all oil passages and blow out with compressed air.

3. Strainer cover: Apply Loctite to strainer cover bolts during reassembly.

P. Bearings and Oil Seals

1. After cleaning and lubricating bearings, rotate inner race with a finger. If rough spots are felt, replace the bearing.

NOTE: Bearings are most easily removed or installed if the housings are first heated to approximately 95°~ 125°C (200°~250°F). Bring the case up to proper temperature slowly. Use an oven to avoid distortion.

2. Check oil seal lips for damage and wear. Replace as required.

Q. Middle Gear Case

NOTE: This section involves external inspection only. For middle gear case overhaul and adjustment, refer to the Shaft Drive Section page 102.

1. Inspect entire exterior for leakage. If leakage is found, the unit should be disassembled.

2. Check middle gear lash as follows:

a. Support gear case in a vise by the output shaft flange. Connect the lash measurement tool to the input shaft as shown.

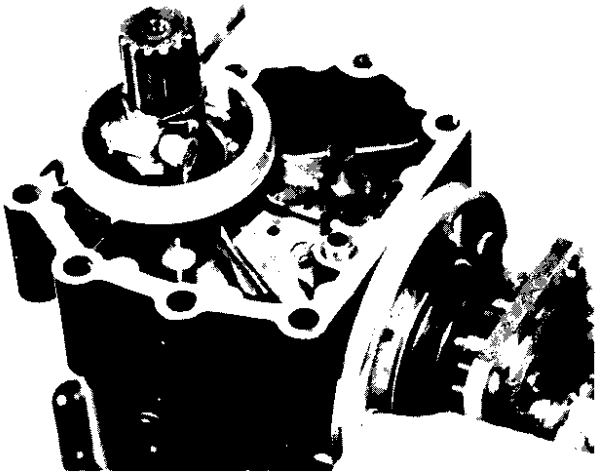

b. Mount a dial gauge against the lash measurement tool at the scribed mark (34mm from the center of the shaft).

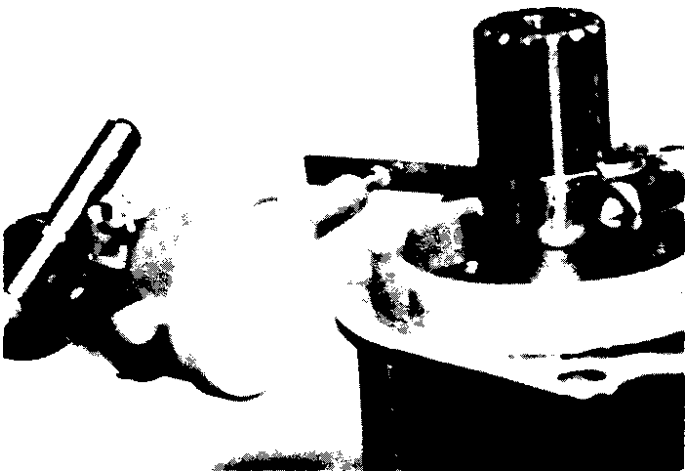

c. Hold the gear case and rotate the input shaft back and forth using the special wrench. Read the gear lash on the dial gauge.

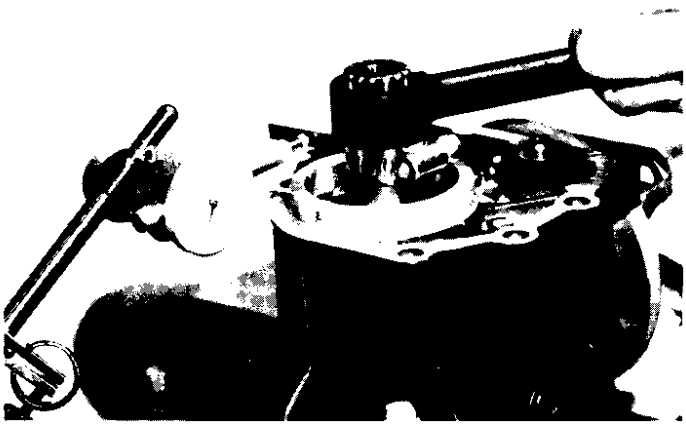

Middle gear case lash: 0.1~0.2mm (.004~.008")

If lash is not within tolerance, refer **to** Drive Shaft Section page 102

3-4 ENGINE ASSEMBLY AND ADJUSTMENT

NOTES: 1) All gaskets and seals should be replaced when an engine is overhauled. All gasket surfaces must be cleaned. 2) Properly oil all mating engineand transmission parts during assembly. 3) **All** circlips should be inspected before assembly. Replace distorted circlips. Always replace cotter pins and piston pin clips after one **use.**

A. Shift Cam

Install shift cam, stopper plate, and circlip. Tighten shift cam locating bolt and bend over the lock tab. Install and tighten detent assembly.

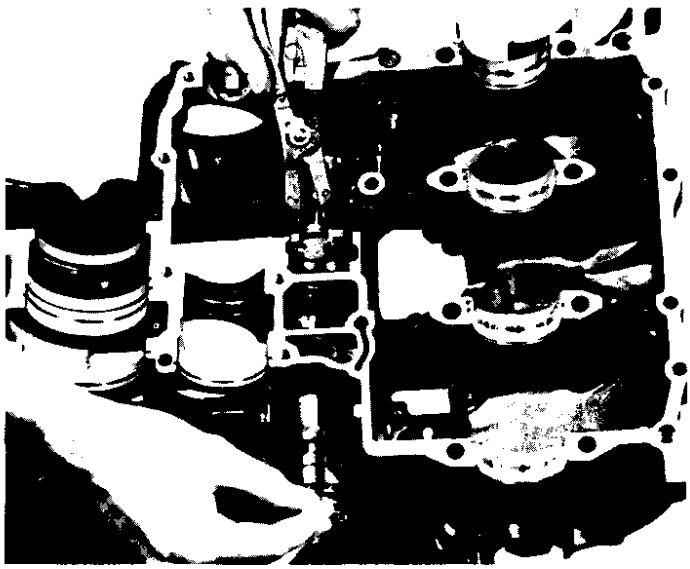

Shift cam locating bolt torque: 1.3~2.1m-kg (9~15ft-lbs)
Detent assembly torque: 4.0~4.5 m-kg (29~32ft-lbs)

B. Transmission

1. Place 2nd gear wheel end of drive axle into crankcase. Install middle drive gear. Make sure circlip half is positioned properly.

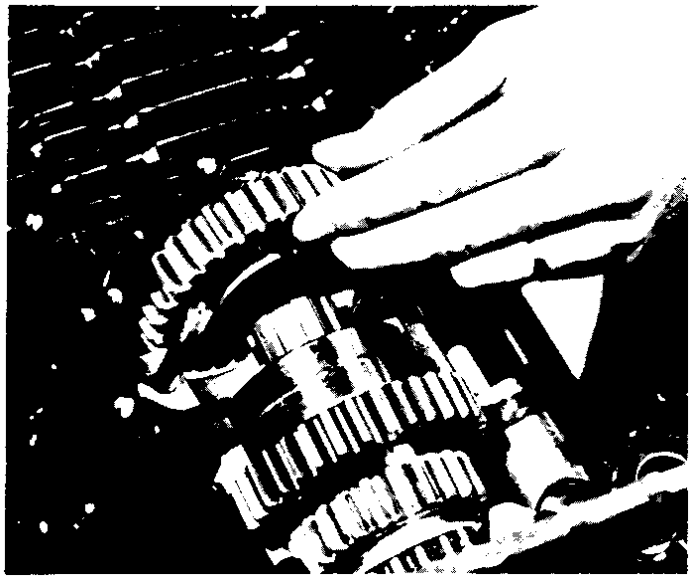

2. Install bearing cap, washers, dnd nuts. Tighten bearing cap.

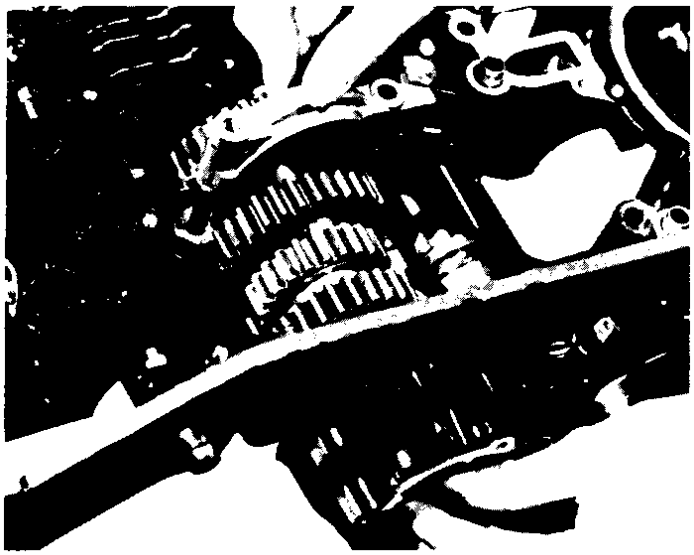

Bearing cap torque: 1.8~2.2 m-kg (13~16 ft-lbs)

3. Install plate washer, spring washer, and bolt holding drive axle.

4. Place shift fork guide bar into crankcase. Place plate washer and shift forks on the guide bar. The washer must be positioned next to the bearing cap. Install the circlip (E-clip) on the shaft to hold the plate washer next to the bearing cap.

NOTE: When installing shift forks, make sure cam follower pins are correctly positioned in the shift cam.

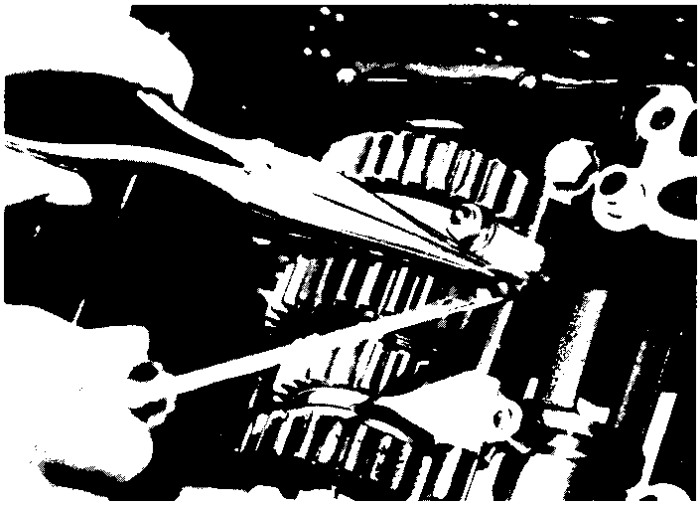

5. Install main shaft and clutch push rod seal.

6. Install shift fork guide bar and shift fork **1.** Install circlips (E-clips).

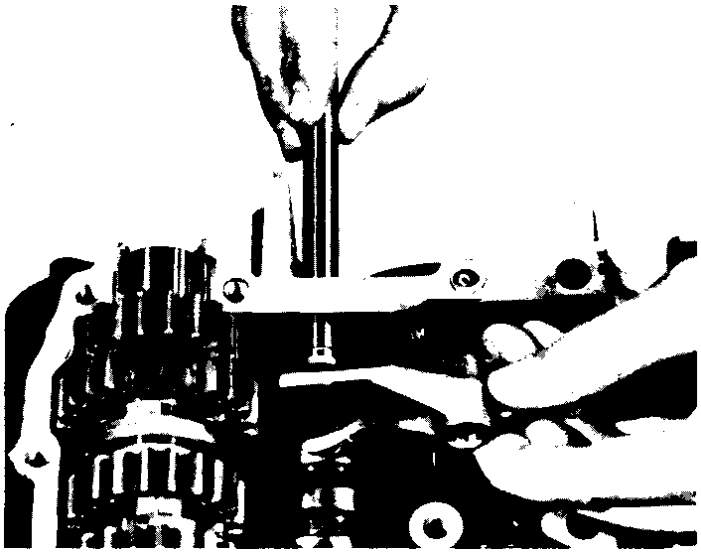

7. Install middle driven gear. Make sure circlip halves are properly installed. Each circlip half fits into both crankcases.

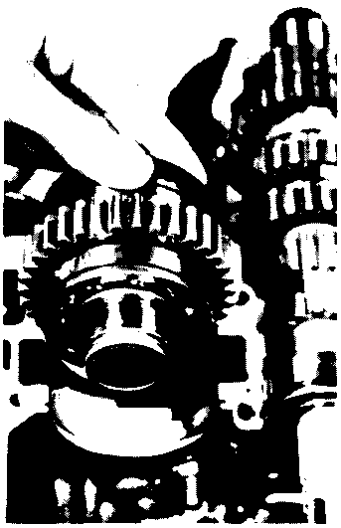

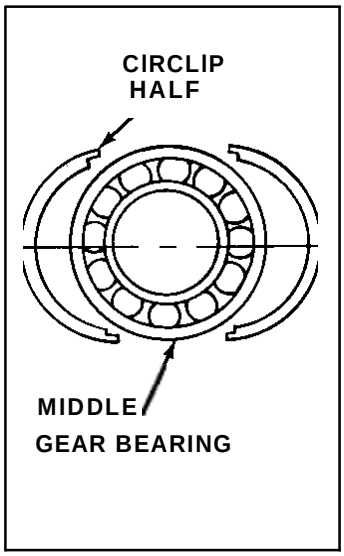

NOTE: When a new seal is installed, grease the lips of the seal before installation. Inspect the seal after installation.

C. Crankshaft and Crankcases

1. Install crankshaft into bottom crankcase. Crankcase bearings must be well oiled.

2. Apply Yamabond No. 4 sealant to crankcase mating surfaces.

CAUTION: DO not allow sealant to contact bearing inserts.

3. Make sure the o-ring is installed. Make sure all shafts and seals are positioned properly.

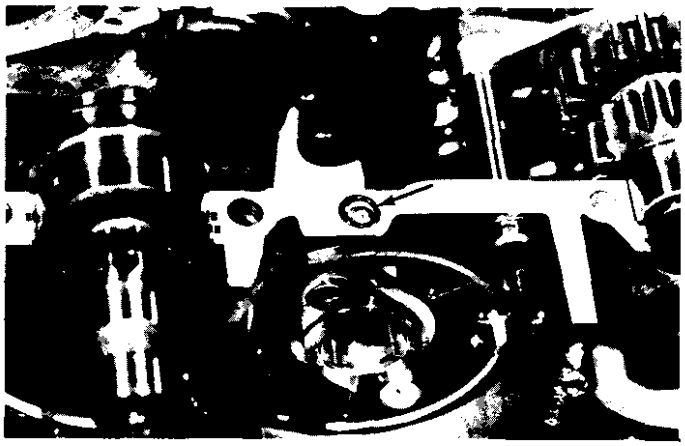

4. Install crankcase top and bolts. Install bolts as follows:

a. Use copper washers on bolts 5, 6, 7, 8.

b. Bolt threads must be oiled.

c. Tighten bolts in two stages in proper torque sequence. Start with bolt number one. Tighten the unnumbered bolt as number 24.

Stage 1:	8mm bolts	1.0 m-kg (7 ft-lb)
	10mm bolts	2.0 m-kg (14 ft-lb)
Stage 2:	8mm bolts	2.0 m-kg (14 ft-lb)
	10mm bolts	3.7 m-kg (27 ft-lb)

D. Oil Pump

1. Reassemble oil pump in reverse disassembly order. Lubricate the oil pump well during assembly.

2. Install oil pump. Make sure rotor housing seal is positioned correctly.

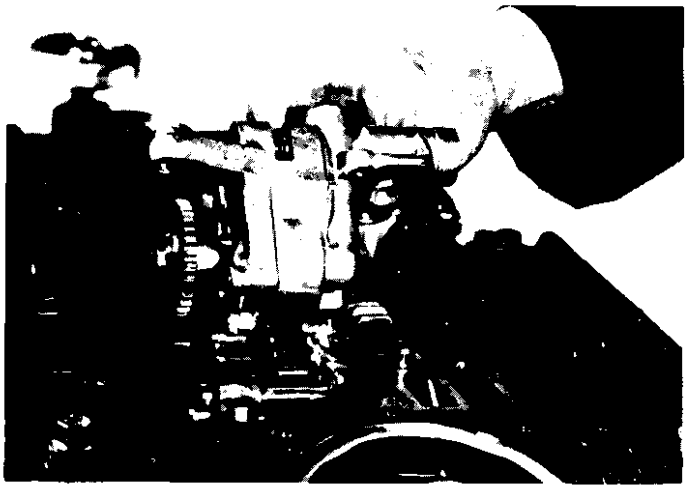

NOTE: The oil pump must be full of oil when installed.

3. Install strainer cover. Use a new gasket.

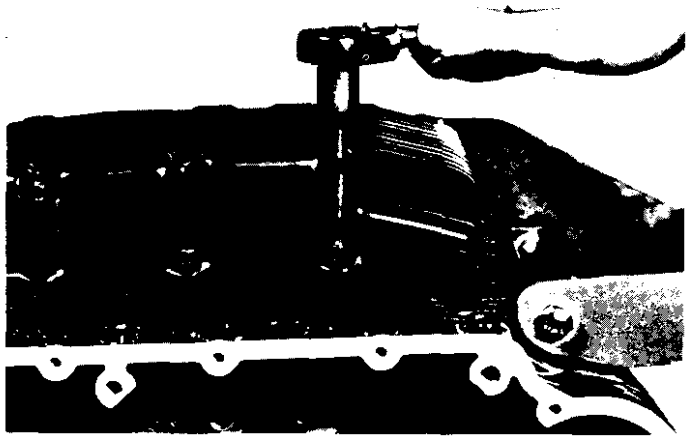

Strainer cover torque: 1.0 m-kg (7 ft-lb)

E. Shifter Assembly

1. Install shift shaft. Install circlip (E-clip) on left side of crankcases.

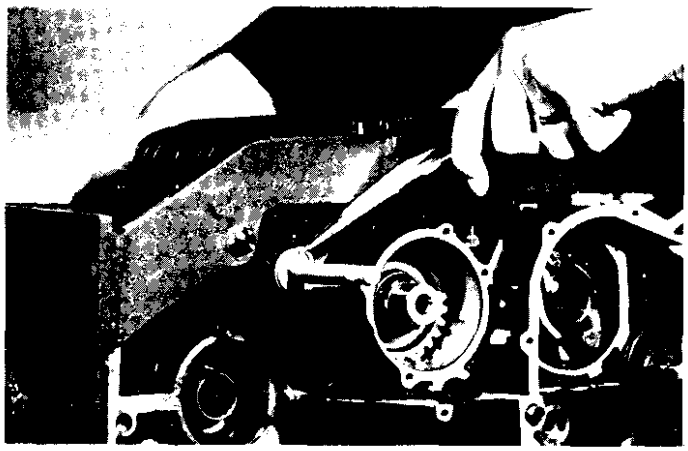

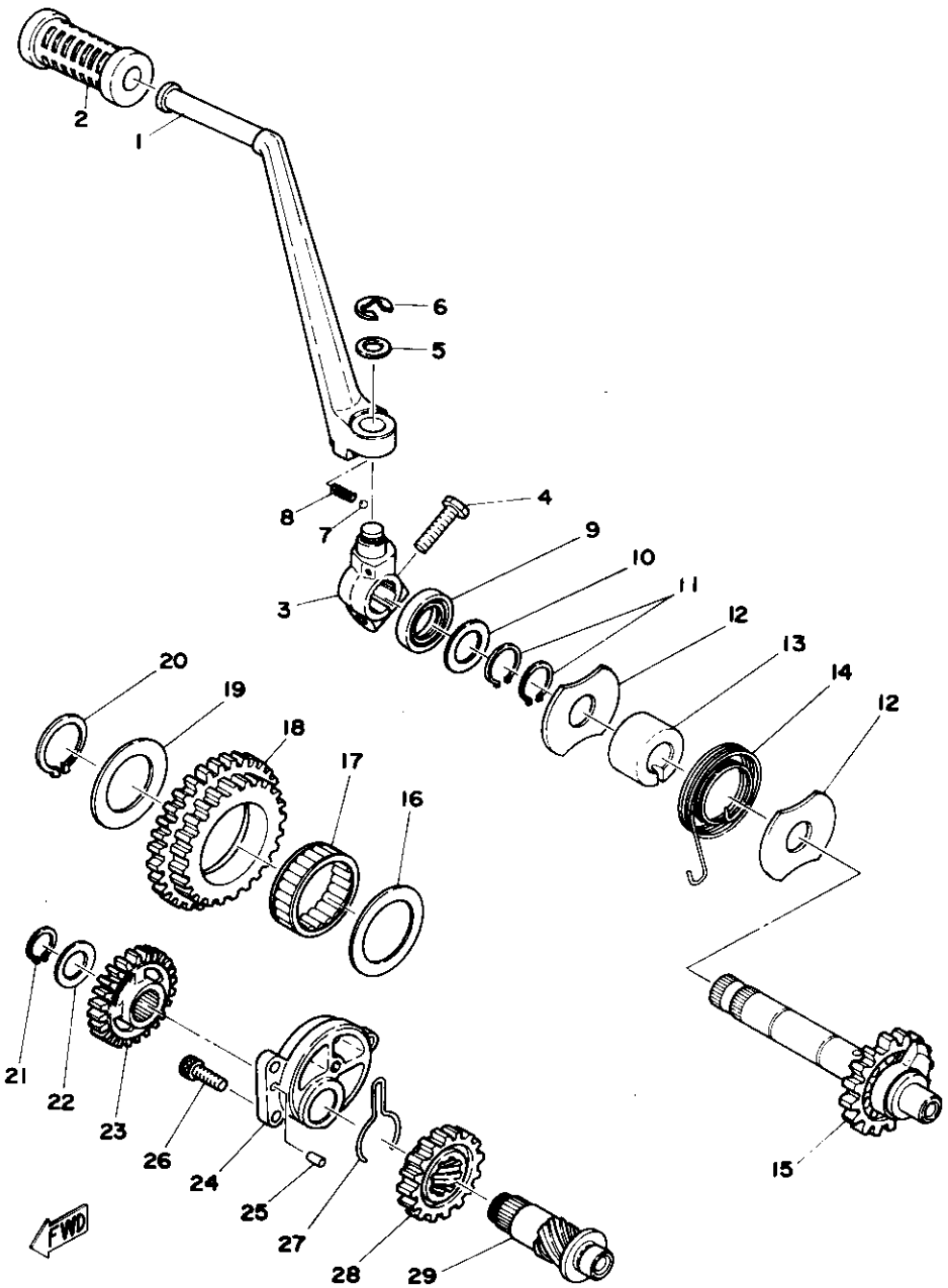

1 CRANK, kick
2 COVER, kick lever
3 BOSS, kick crank
4 BOLT
5 WASHER, plate (15.5-24-1.5)
6 CIRCLIP (E-10)
7 BALL (7/32 inch)
8 SPRING, compression
9 OIL SEAL (SD-20-30-7)
10 WASHER, plate (20.2-30-1.0)
11 CIRCLIP (S-20)
12 COVER, kick spring
13 SPACER
14 SPRING, torsion
15 KICK SHAFT ASS'Y (22T)
16 SHIM, kick shaft 1 (40.3-54-0.8)
17 BEARING
18 KICK IDLE GEAR ASS'Y (38/30T)
19 SHIM, kick shaft 2 (35.3-54-0.8)
20 CIRCLIP (S-35)
21 CIRCLIP (S-17)
22 SHIM
23 GEAR, kick 4 (20T)
24 HOLDER, kick gear
25 PIN, dowel (4-10)
26 BOLT, hexagon socket head
27 CLIP, special
28 GEAR, kick 5 (21T)
29 SHAFT, kick 2

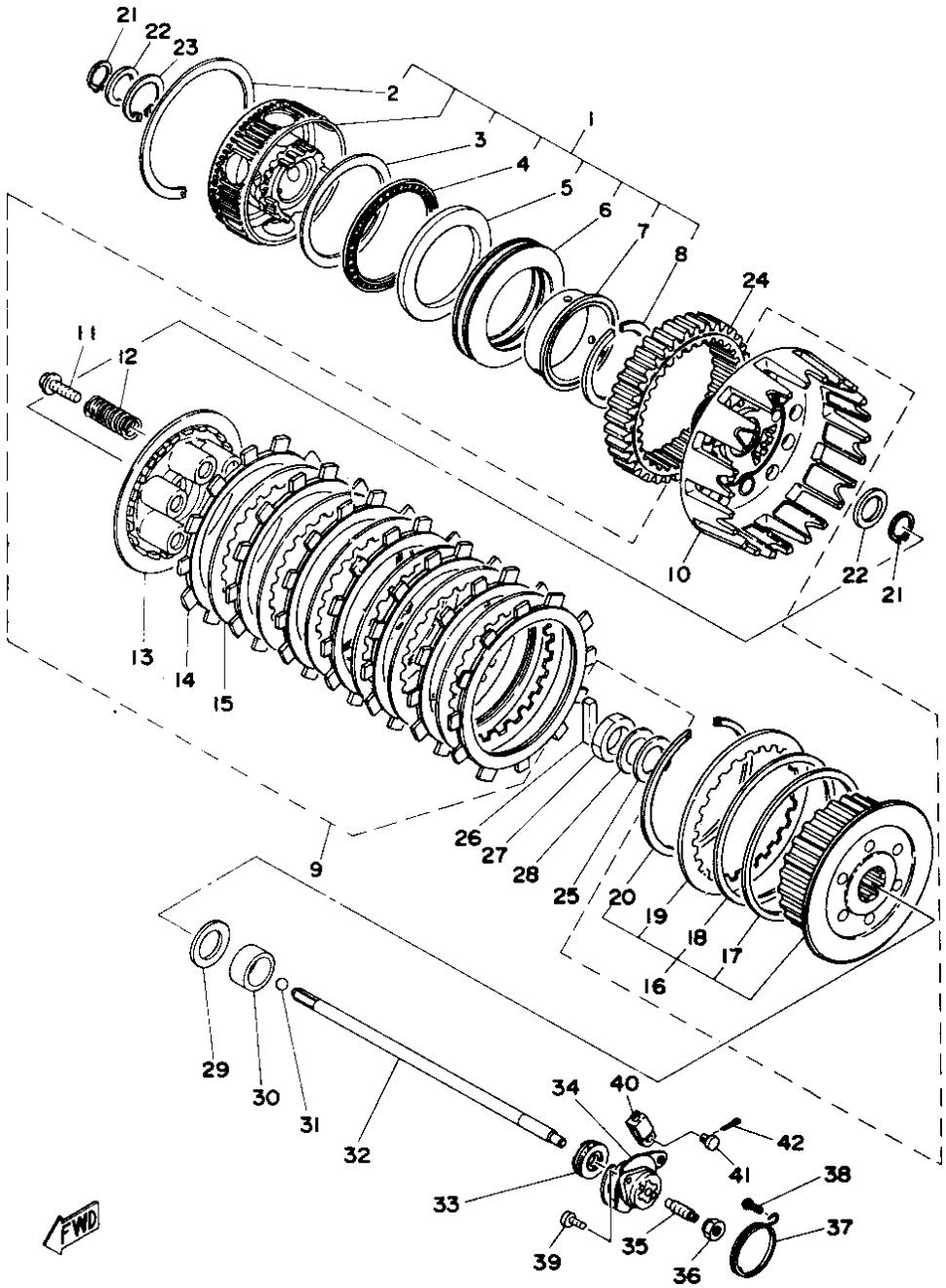

1 DAMPER ASS'Y
2 CIRCLIP
3 WASHER, plate (76-95-0.8)
4 BEARING
5 WASHER, plate (69-95-5.4)
6 SPRING, damper
7 COLLAR
8 CIRCLIP
9 CLUTCH ASS'Y
10 CLUTCH HOUSING COMP.
11 SCREW
12 SPRING, compression
13 PLATE, pressure
14 PLATE, friction 1
15 PLATE, clutch 1
16 CLUTCH BOSS ASS'Y
17 PLATE, seat
18 SPRING, clutch boss
19 PLATE, clutch 2
20 CIRCLIP
21 CIRCLIP (S-20)
22 WASHER, plate (21.2-29-2)
23 CIRCLIP
24 GEAR, primary driven (45T)
25 WASHER, plate (22-36-2.6)
26 ROD, push 1
27 NUT, hexagon
28 WASHER, conical spring
29 WASHER, plate (25.2-39-1.0)
30 SPACER
31 BALL (5/16 inch)
32 ROD, push
33 OIL SEAL (SD-8-25-8)
34 BALL SCREW ASS'Y
35 SCREW, adjusting
36 NUT, adjusting
37 SPRING, torsion
38 HOOK, spring
39 SCREW, pan head
40 JOINT
41 PIN
42 PIN, cotter

2. Install shift lever 2. The dot on shift lever 2 must align with the dot on the shaft.

3. Shift transmission into second gear. The line on the shift cam must align with the line on shift lever 2. If not aligned, adjust by turning the adjusting screw.

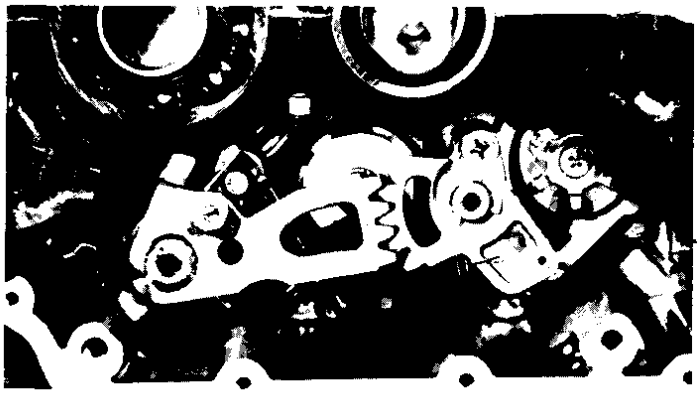

F. Kick Starter Assembly

1. Install kick gear 5 assembly into crankcases. The kick clip (special clip) must be positioned in the groove.

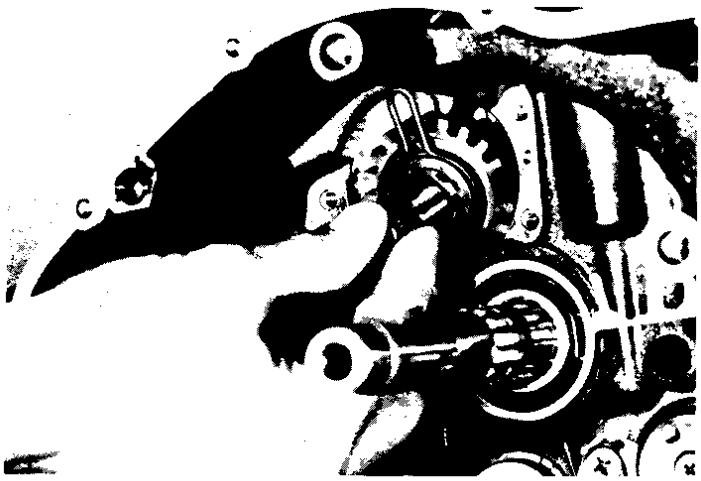

2. Install kick gear holder.

3. Install kick gear 4, shim, and circlip.

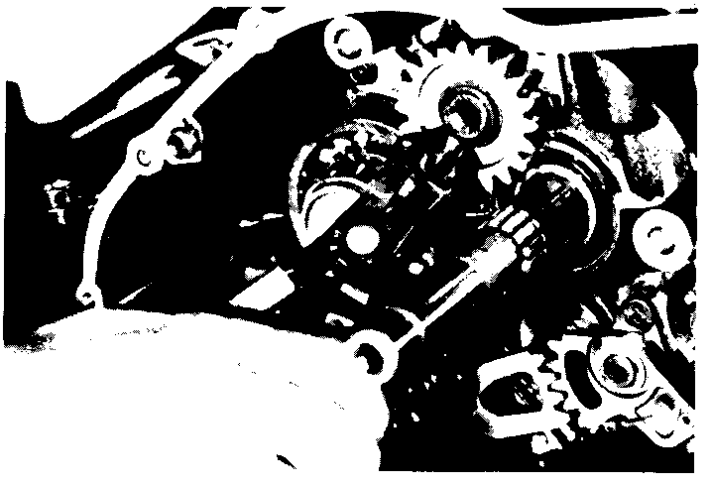

4. Install shim and bearing onto idler shaft. Oil the bearing.

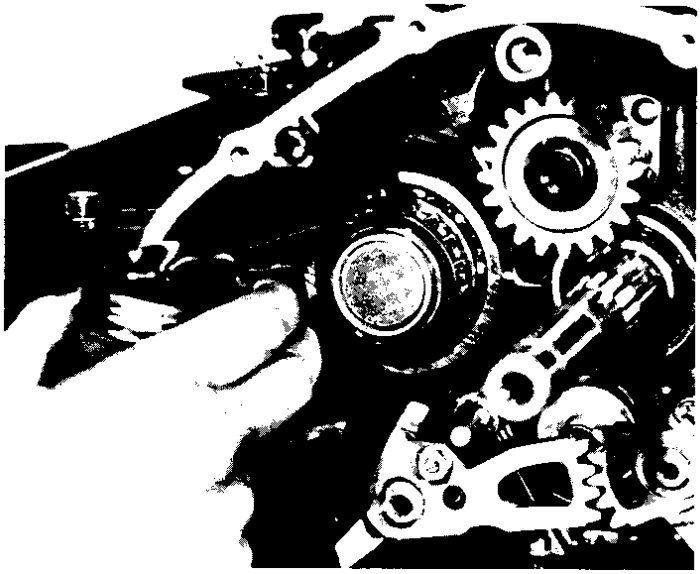

5. Install the kick starter shaft and kick idle gear assembly together. Use the kick crank to help install the kick shaft assembly. Install the torsion spring on the boss. Install the washer and circlip on the kick shaft. Check the movement of the kick shaft with the kick crank. Remove the kick crank.

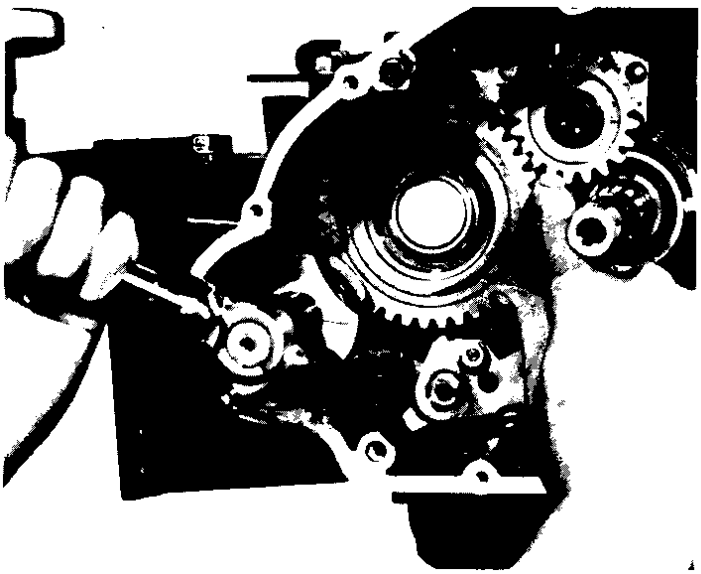

G. Clutch and Primary Drive

1. Install clutch spacer, plate washer, and clutch boss. Install the spring washer and lock nut. Use the clutch holding tool and special 32mm deep socket (special tool) to tighten the clutch nut.

Clutch nut torque:
8m-kg (58 ft-lbs)

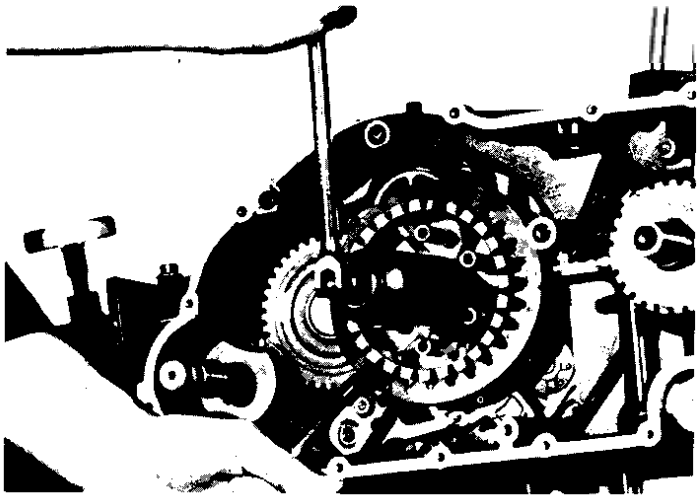

2. Install a clutch friction plate, then a steel clutch plate. Install clutch friction plates and steel plates alternately.

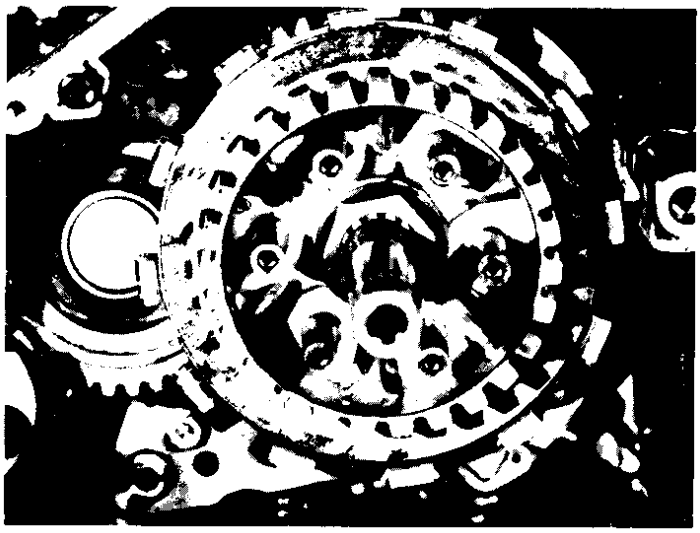

NOTE: Each steel clutch plate has a tab. There is a dot on the clutch boss to correspond to each tab. Install a clutch plate tab next to one dot. Position the next steel plate next to the next dot on the clutch boss. Follow this pattern clockwise around the clutch boss until all friction and steel clutch plates are installed.

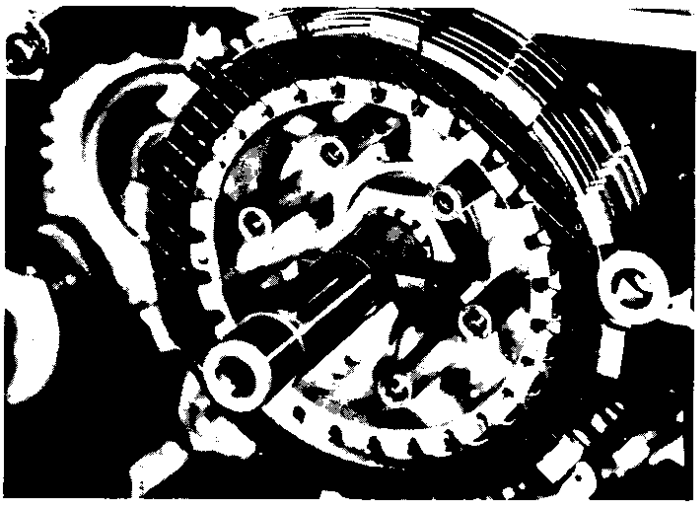

3. Install push rod 1 into the slot in the main axle.

4. Install plate washer onto main axle. Install pressure plate with the arrows matching the arrows on the clutch boss.

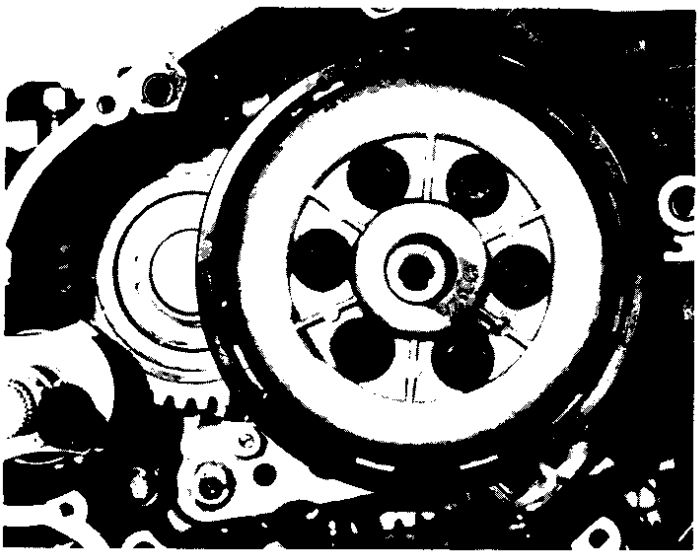

5. Install two clutch springs and screws lightly so that the clutch plates can be moved.

6. Install the clutch alignment tool (special tool) to align the clutch friction plates. The tool must be centered on the clutch pressure plate.

7. Install remaining clutch springs and screws. Tighten all clutch screws. Remove clutch alignment tool. Install circlip. Install plate washer.

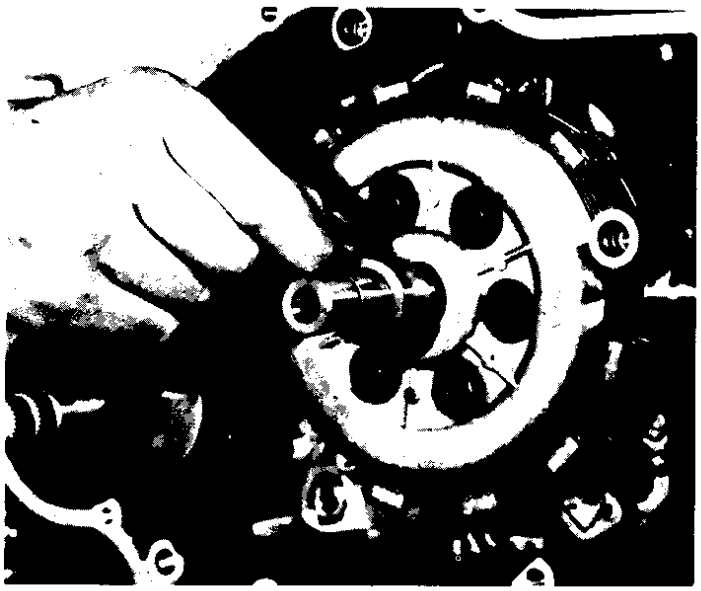

Clutch screw torque:
0.8~1.0 m-kg (6~7 ft-lbs)

8. Carefully install spacer and clutch housing. Use care to avoid damaging friction plates.

9. Place drive chain on drive gear. Install damper assembly into primary driven gear and install this assembly into the clutch assembly.

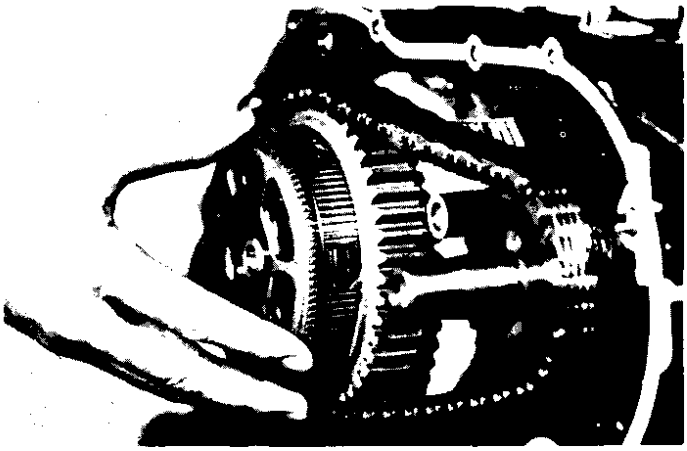

10. Install plate washer and circlip on main axle. Install large circlip on clutch damper.

H. Bearing Housing

Install bearing housing. Tighten bearing housing bolts.

Bearing housing bolt torque: 2.0~2.4 m-kg (14~17 ft-lbs)

I. Right Crankcase Cover

1. Install oil pressure sending switch.

2. Place plate washer on kick shaft. Install a new gasket and the right crankcase cover. Do not use all cover screws until rotor and generator cover are installed.

3. Install rotor, plate washer, spring washer and bolt. Hold rotor with special rotor holding tool and tighten bolt.

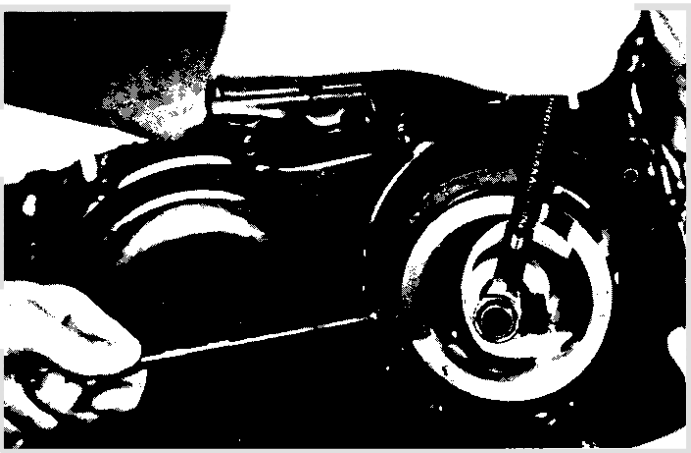

Rotor bolt torque: 3.0~4.0 m-kg (22~29 ft-lbs)

4. Install generator assembly. Connect oil pressure warning wire to the switch. Install all generator cover and right crankcase cover screws. Route the wiring harness and install generator cover screw with wire harness clamp.

5. Install breather cover.

J. Middle Gear

1. Install drive cam and spring onto middlegear shaft.

2. Install a new gasket and install middle gear case.

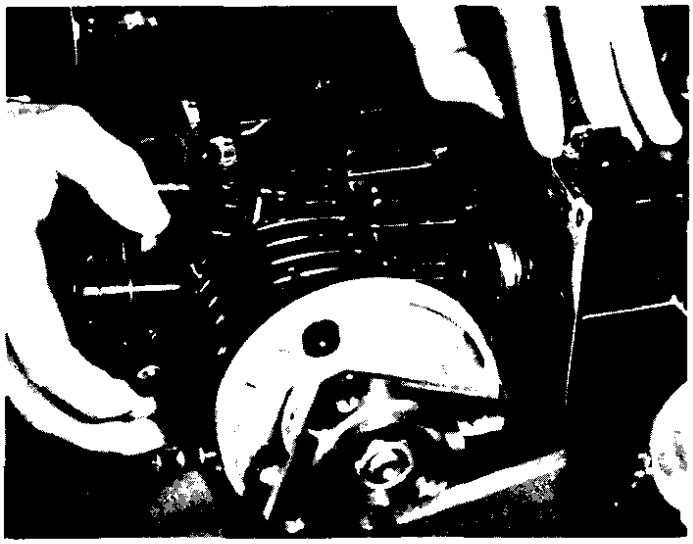

Middle gear case bolt torque: 2.0–2.5 m-kg (14–18 ft-lbs)

K. Drive Axle Bearing Housing

1. Oil drive axle bearing.

2. Install drive axle shim on drive axle.

3. Oil the o-ring on the bearing housing. Install bearing housing. Attach wire harness clamp to lower securing screw.

L. Left Crankcase Cover

1. Oil Delivery Pipe

   Oil the threads of the oil delivery pipe union bolts. Install new washers on each side of each bolt and tighten bolts.

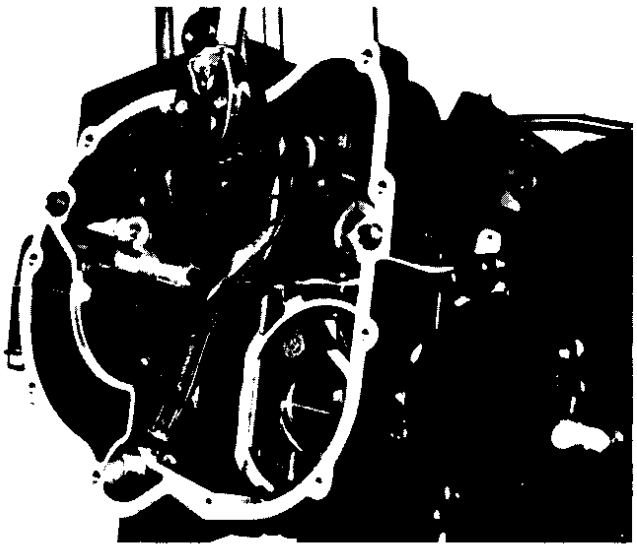

Oil delivery pipe torque: 2.0~2.2 m-kg (14~16 ft-lbs

2. Install plate washer on oil pump driven gear shaft. Install starter clutch assembly.

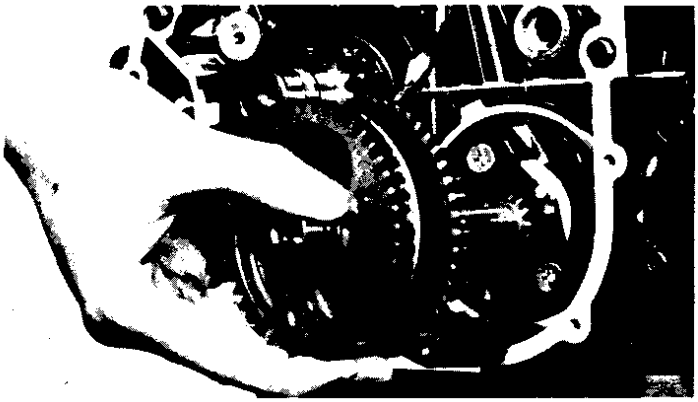

3. Install cam chain dampers. Install the damper with the three (3) raised blocks to the front.

4. Install cam chain onto drive sprocket. Connect wire to each end of cam chain.

5. Install oil pump drive gear. Place a rag between oil pump drive gear and driven gear to lock the gears. Install plate washer and nut. Tighten nut.

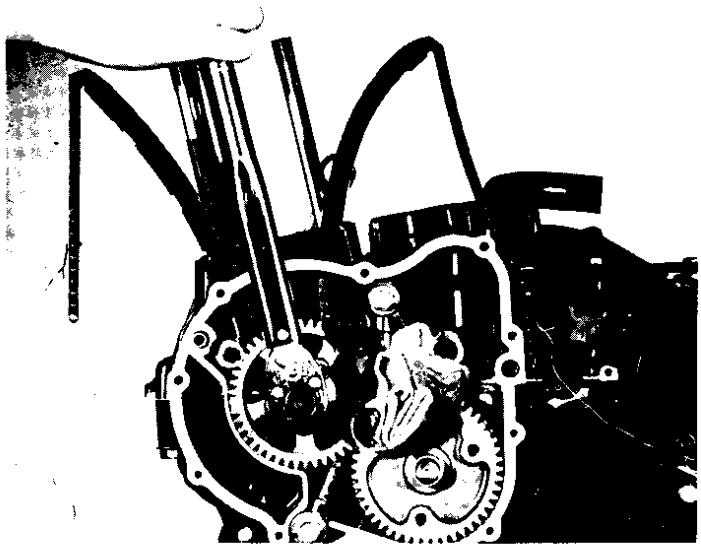

Oil pump drive gear nut torque: 8.0~12.0 m-kg (58~87 ft-lbs)

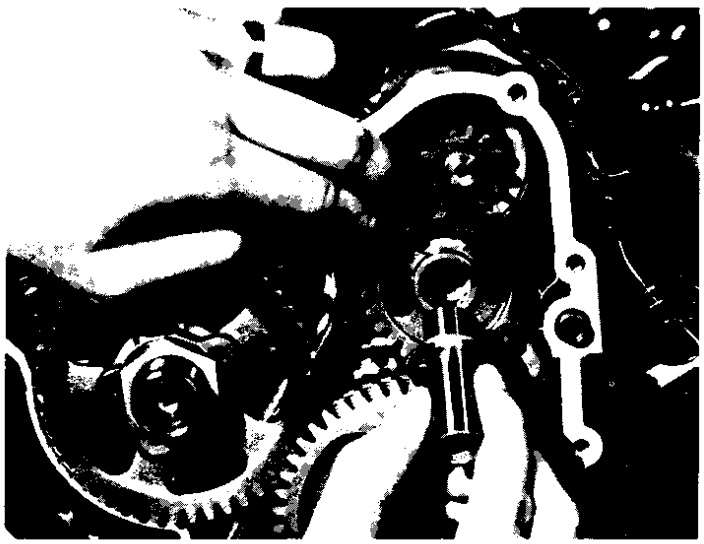

6. Install starter motor

7. Install starter motor idler gear and kick idler gear. Install the idler gear shaft.

8. Install clutch ball bearing and clutch push rod.

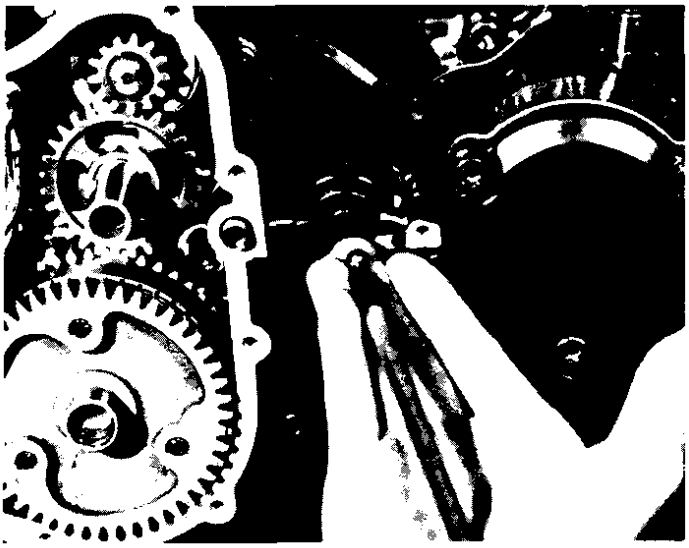

9. Install plate washer on starter clutch shaft. Install left crankcase cover.

NOTE: Install two wiring harness clamps on lower cover screws.

M. Ignition Assembly

1. Install governor assembly.

2. Install contact breaker plate assembly. Route the assembly wires using the clamps provided.

3. Attach neutral light wire.

4. Install crankshaft turning nut on crankshaft. Tighten securing bolt.

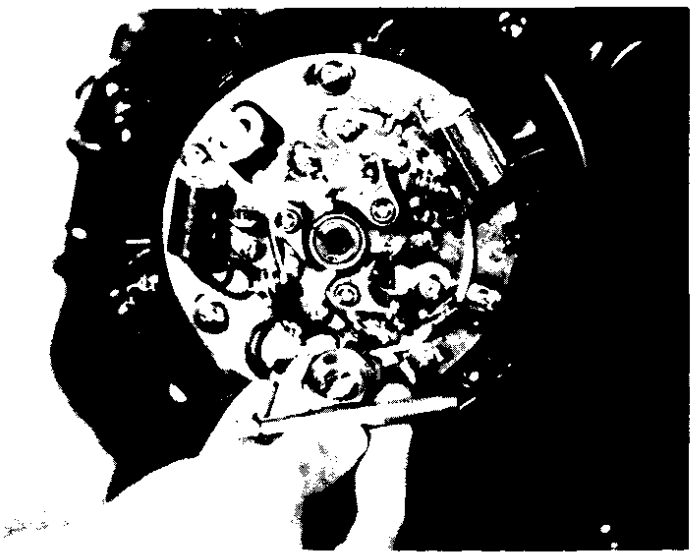

Crankshaft turning nut (bolt) torque: 1.5~2.9 m-kg (11~21 ft-lb)

N. Pistons and Cylinder

1. Install pistons on rods. The arrow on the pistons must point to the front of the engine.

NOTE: Always install new piston pin circlips.

2. Install a new cylinder base gasket. Install new cylinder seal 2, with flat side into crankcase. Install three cylinder base o-rings.

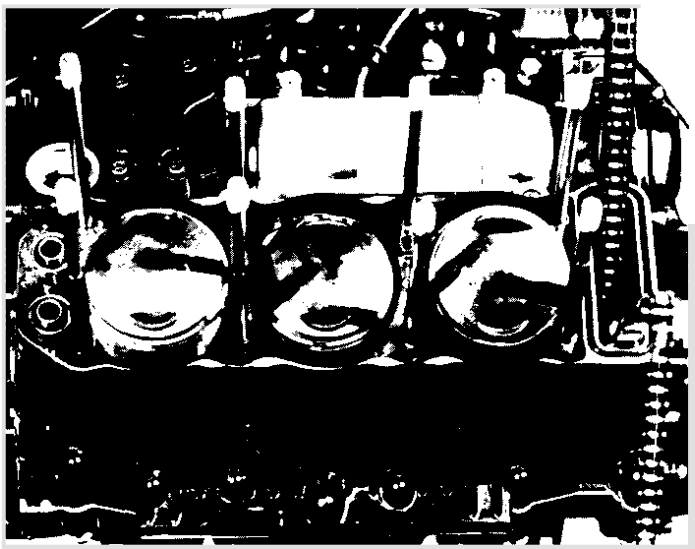

3. Install two round cylinder seals (cylinder seal 3). The flat side of the seal is the top and fits into the cylinder.

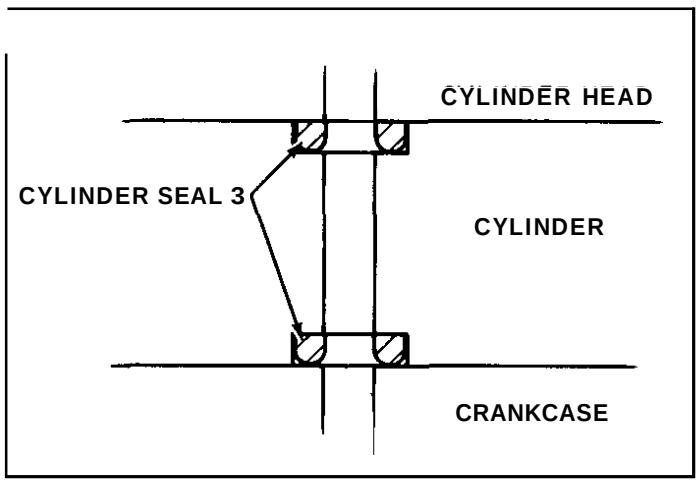

4. Position piston rings as shown.

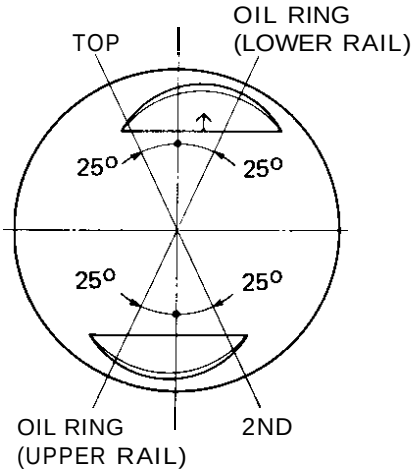

NOTE: Make sure ends of oil ring expanders are not overlapped.

O. Cylinder Head Installation

NOTE: The assembly of the cylinder head is the reverse of the disassembly procedure. Install valve springs with tighter windings (smaller pitch) down. Install each valve lifter in its original location.

1. Install new cylinder head gasket. Place the gasket with the tab forward. Install a new cylinder seal 1.

2. Install **two** new cylinder seals (cylinder seal **3)** with the rounded side into the cylinder.

3. Install cylinder head. Place two **(2)** thicker plate washers on two **(2)** center exhaust studs. Install remaining washers and nuts.

4. Tighten ten **(10)** top cylinder head nuts and bolts. Oil the threads before tightening. Tighten in two **(2)** stages of one-half torque each. Tighten according to the proper sequence (No. 1, 2, 3, etc.)

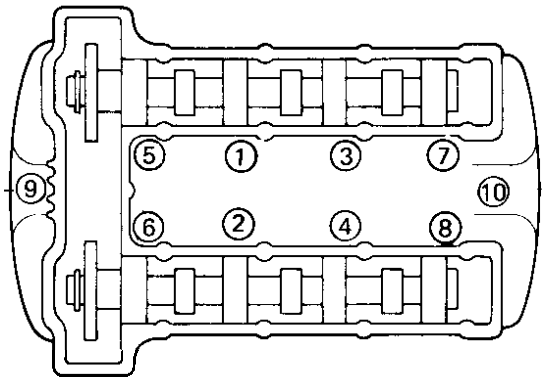

CYLINDER HEAD TORQUE SEQUENCE

Stage 1 : l0mm nut (No. 1-8): 1.5 m-kg (11 ft-lbs) 8mm bolt (No. 9, 10): 1 m-kg (7 ft-lbs)
Stage 2: 10mm nut (No. **1-8)** **3.5** m-kg (25 ft-lbs) 8mm bolt (No. **9,10):** 2.0 m-kg **(14** ft-lbs)

5. Install two **(2)** cylinder head holding nuts with washers on left side of cylinder.

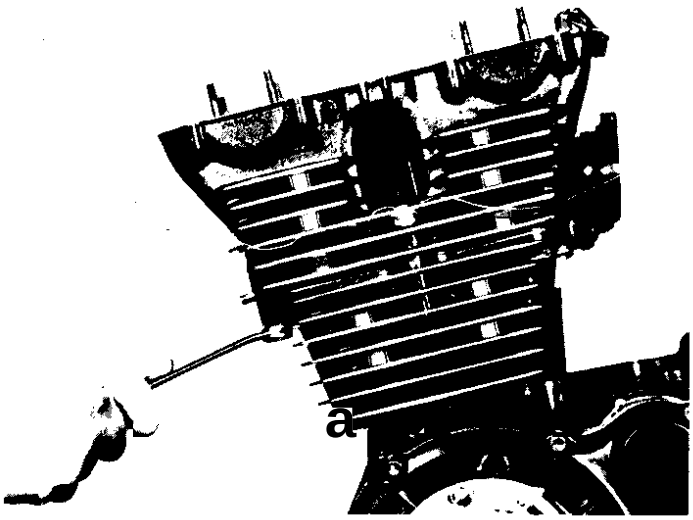

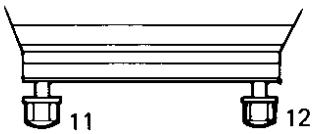

CYLINDER HOLDING NUTS

Holding Nuts Torque: 2.0 m-kg (14 ft-lbs)

6. Install oil delivery pipe. Use a copper washer on each side of each end of the pipe. Install the shorter union bolt into the crankcase.

P. Camshaft Installation

1. Position cylinder No. 1 (left) at T.D.C.

2. Oil the exhaust cam bearing surfaces. Oil the cam caps. Install the exhaust cam and caps. The dot on the cam must align with the arrow on the No. 1 cap. The caps are numbered from left to right: 1, 2, 3,4. The arrows on the caps point to the left.

3. Place washers and nuts on cam shaft cap studs.

NOTE: Manufacturer's marks or numbers stamped on the rings are on the top side of the rings. Coat pistons and rings well with oil.

5. Install the cylinder. A ring compressor is usually not necessary.

CAUTION: Do not turn camshaft except as noted in Step 4. Damage to valves could result.

4. Turn exhaust cam only 1/6 turn (one flat) clockwise, and back to arrow-to-dot alignment. This will help seat the camshaft on the bearing surfaces. Gradually tighten caps from left to right. No 1-4 in that order.

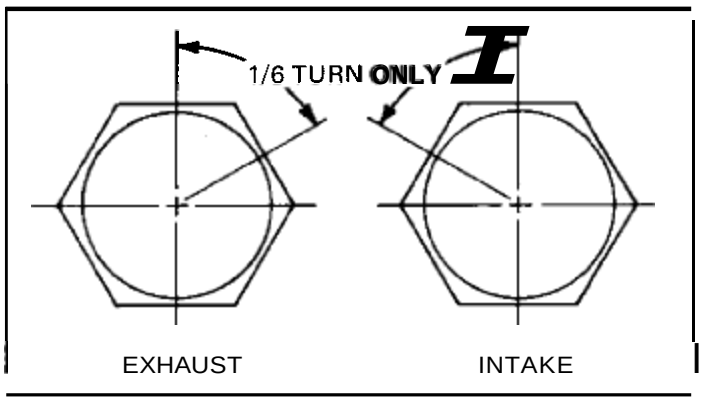

Camshaft Cap Torque: 1 m-kg (7 ft-lbs)

5. Install intake cam using procedures 1-4. Turn intake cam 1/6 turn counterclockwise.

Q. Cam Chain Installation

1. Install guide stopper

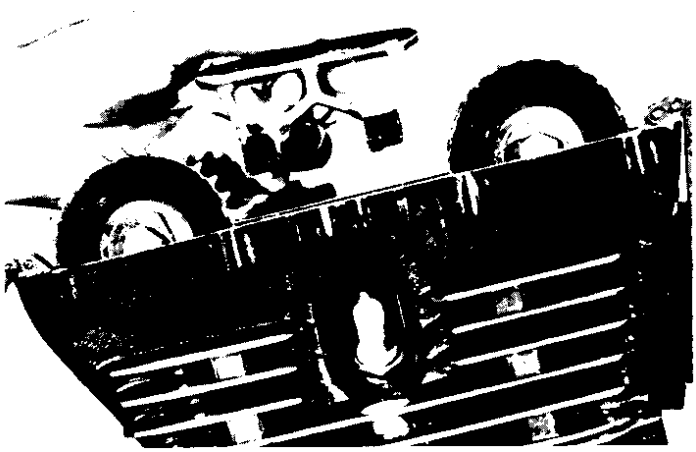

2. Place cam chain on cam sprockets. The dots on the cams must be aligned with the arrows on the No. 1 cam caps. The No. 1 cylinder must be at T.D.C. (The No. 1 "T" mark on the governor aligned with the stationary timing mark.)

3. Install a new cam chain tensioner. Remove the tensioner cover. Loosen the adjuster bolt. Turn the crankshaft until the cam chain tensioner rod moves to its inner most position. Tighten the adjuster bolt and lock nut. Install tensioner cover.

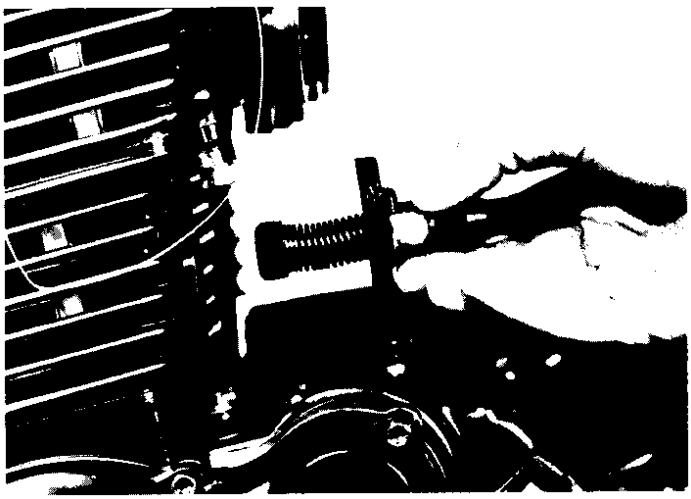

R. Cylinder Head Cover

1. Install new cylinder head cover gasket. Install cylinder head cover.

2. Install air scoop brackets.

3-5 REMOUNTING ENGINE

See page 106 sections 3-6 timing plate setting.

A. Remounting Engine

1. Refer to Chapter 3-1 for engine removal. Reverse the applicable removal steps.

2. Install and tighten engine mounting bolts.

Engine mounting bolt torque:
l0mm bolt: 5.0~6.0 m-kg (36~43 ft-lbs)
12mm bolt: 8.0~11.0 m-kq (58~80 ft-lbs)

3. Install oil filter. Remove oil filter filler bolt. Fill oil filter with 0.5 lit (0.5 qt.) engine oil.

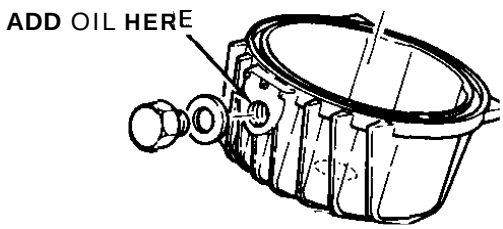

CAUTION: The filter must be filled with the specified amount of oil to prime the oil pump of an overhauled engine.

4. Tighten engine oil drain plug, oil filter mounting bolt, and middle drain plug.

Torque:

Engine oil drain plug:
3.9~4.7 m-kg (28~34 ft-lbs)

Oil filter mounting bolt:
3.0~3.4 m-kg (22~25 ft-lbs)

Middle gear drain plug:
3.9~4.7 m-ka (28~34 ft-lbs)

5. Add oil to engine and middle gear case

Engine oil:	3.0 lit (3.2 US qt.)
Middle gear oil:	360cc (12 oz)

NOTE: These oil quantities are for an overhauled engine. Observe oil filter filling procedure.

CAUTION: If oil pressure warning light (red light) stays on after starting engine, stop engine immediately. Fill oil filter with oil as in step 3 above. Check for proper operation of the warning light.

NOTE: See sections 3-6 on page **106** – Timing plate setting.

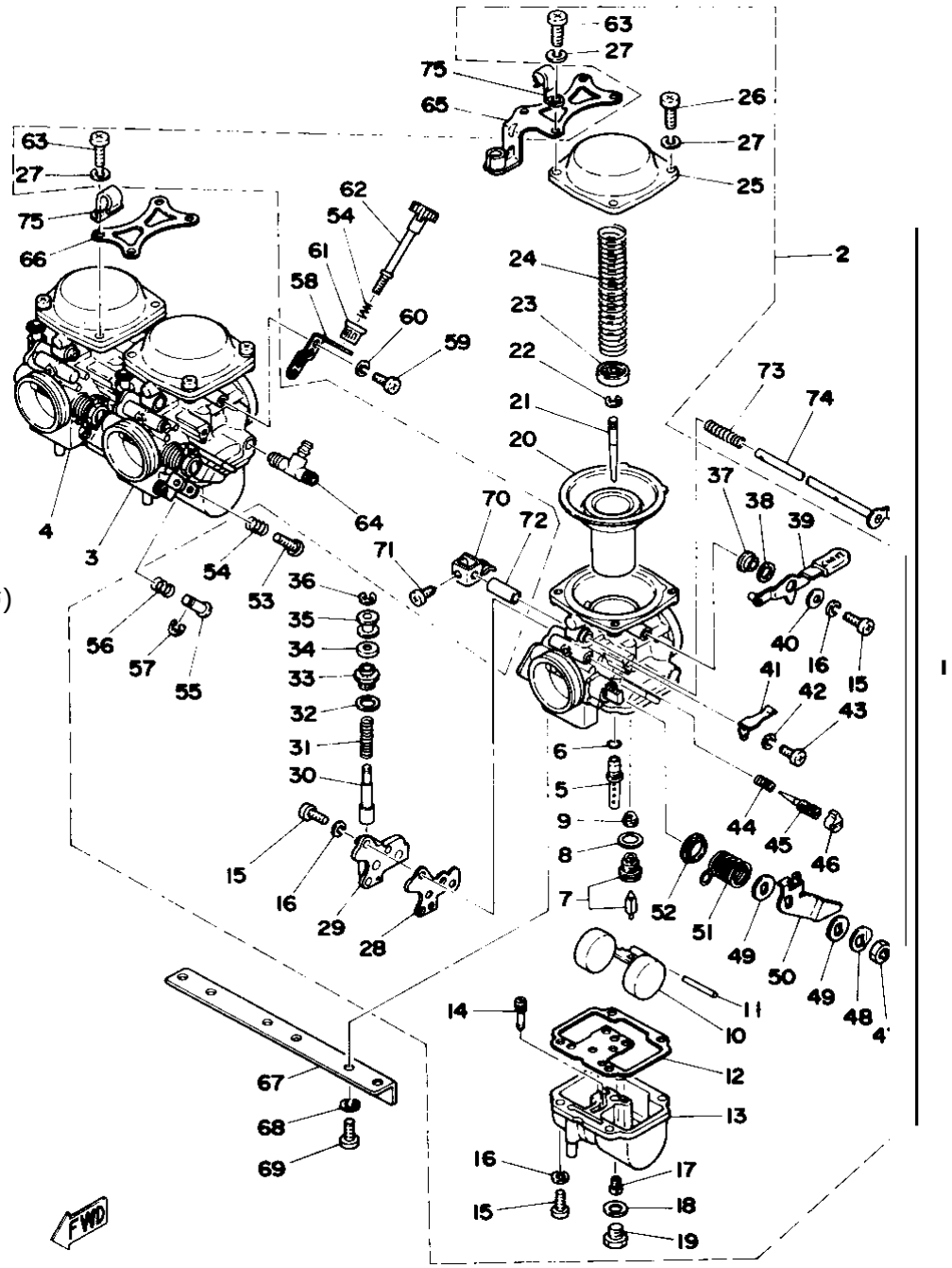

1 CARBURETOR ASS'Y
2 CARBURETOR ASS'Y 1
3 CARBURETOR ASS'Y 2
4 CARBURETOR ASS'Y 3
5 NOZZLE, main (Y-2)
6 O-RING
7 VALVE SEAT ASS'Y (2.0 ø)
8 WASHER, valve seat
9 NET, filter
10 FLOAT
11 PIN, float
12 GASKET, float chamber
13 BODY, float chamber
14 JET, pilot (No. 17.5)
15 SCREW, pan head
16 WASHER, spring
17 JET, main
18 WASHER
19 SCREW, plug
20 DIAPHRAGM ASS'Y
21 NEEDLE (4H11-3)
22 CLIP, needle
23 PLATE, needle fitting
24 SPRING, diaphragm
25 COVER, diaphragm
26 SCREW, pan head
27 WASHER, spring
28 GASKET, starter body
29 BODY, starter
30 PLUNGER, starter
31 SPRING, plunger
32 WASHER
33 CAP, plunger
34 COVER, plunger cap
35 BUSHING, starter plunger
36 CLIP
37 RING
38 WASHER
39 LEVER, starter 1
40 WASHER
41 SPRING, starter lever
42 WASHER, spring
43 SCREW, pan head
44 SPRING, pilot screw
45 SCREW, pilot
46 CAP, pilot screw
47 NUT
48 WASHER
49 COLLAR, spring
50 LEVER, throttle
51 SPRING, throttle
52 SEAL (8ø)
53 SCREW, throttle stop
54 SPRING, throttle stop
55 ROD, push
56 SPRING, adjuster
57 CLIP
58 BRACKET
59 SCREW, pan head
60 WASHER, spring
61 BUSHING
62 ADJUSTER
63 SCREW, pan head
64 NIPPLE
65 THROTTLE BRACKET ASS'Y
66 PLATE, upper
67 PLATE, lower
68 WASHER, spring
69 SCREW, pan head
70 LEVER, starter 2
71 SCREW
72 PIPE, starter lever shaft
73 SPRING, starter lever shaft
74 SHAFT, starter lever
75 CLIP

CARBURETION

4-1 CARBURETOR

A. Description

The XS750D is equipped with three "constant velocity" (CV) carburetors mounted on rubber intake manifolds. Air flow through the venturi is controlled by a throttle slide (vacuum piston). The slide is raised and lowered by engine vacuum rather than a cable linked directly to the throttle grip. This type of carburetor Compensates automatically for atmospheric pressure changes such as those encountered when riding to high altitudes.

B. Specifications

Main jet	#145
Jet needle	4H11-3
Needle jet	Y-2
Starter jet	#45
Float height	26.6mm (above gasket surface)
Pilot jet	#17.5
Low speed screw	preset
Fuel valve seat	2.0mm

NOTE: The low speed mixture screw settings are adjusted at the factory with the use of specialized equipment. Do not attempt to change these settings.

C. Disassembly

1. Prepare to separate carburetors (separation not necessary if only float level adjustment or throttle slide inspection is to be done). Remove starter lever (1). Loosen starter lever (2) securing screws and remove starter lever rod.

2. Remove upper and lower brackets. Note position of synchronizing screws for guidance in reassembly. Separate carburetors.

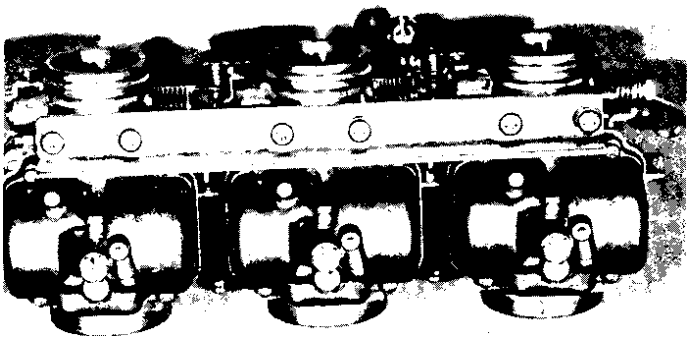

3. Remove vacuum chamber cover. Remove the spring, needle fitting plate, needle, and diaphragm (vacuum piston).

4. Note that there are tabs on the rubber diaphragm. There are matching recesses in the carburetor body for the diaphragm tabs.

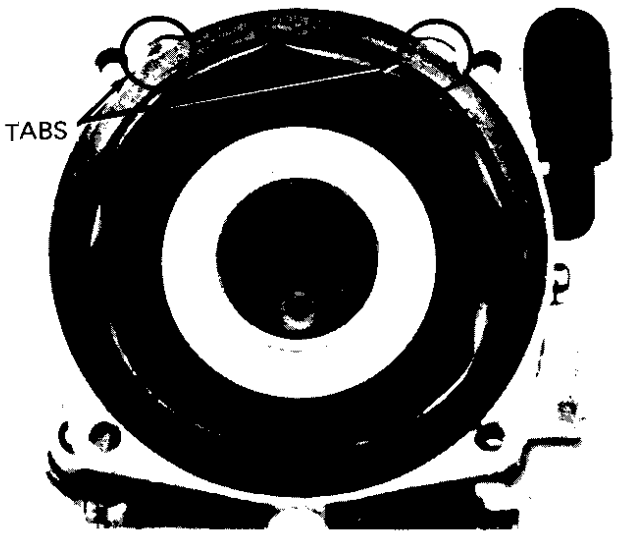

5. To inspect starter jet, remove three (3) screws holding the starter body to the left side of the carburetor.

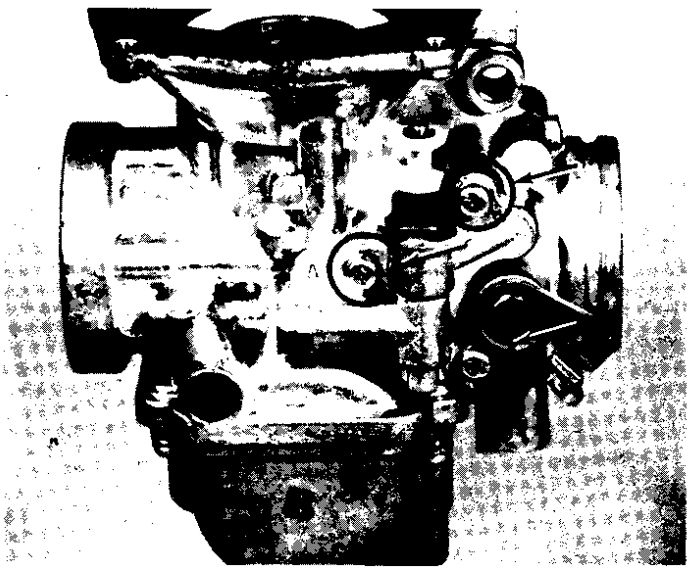

6. Remove the four (4) screws holding the float bowl cover.Remove float bowl cover. The main jet is located under a cover in the float bowl.

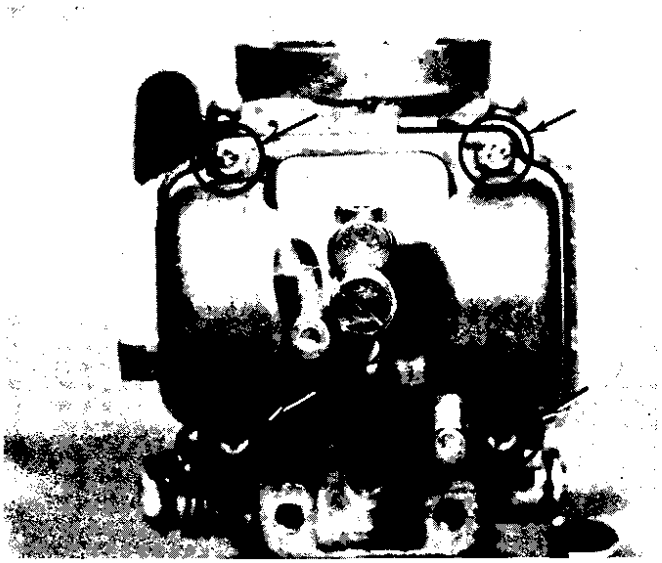

7. Pull out float pivot pin. Remove the float assembly. Be careful to not lose the float valve needle located under the float level adjustment tang. Remove the needle jet.

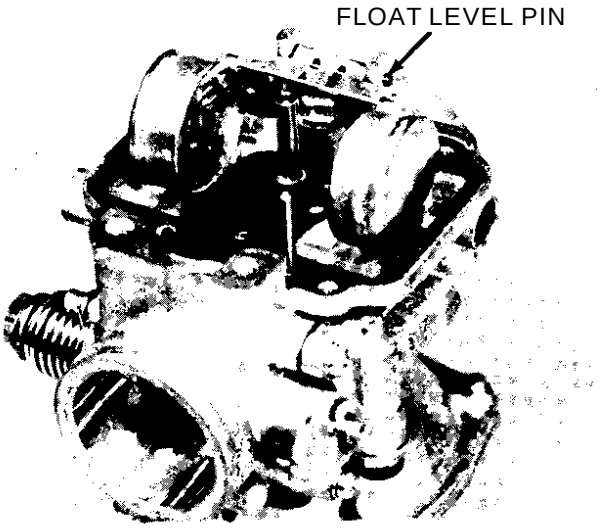

8. Reassemble in reverse order. Pay close attention to the installation of the vacuum piston diaphragm.

D. Inspection

1. Examine carburetor body and fuel passages. If contaminated, wash carburetor in petroleum-based solvent. Do not use caustic carburetor cleaning solutions. Blow out all passages and jets with compressed air.

2. Examine condition of floats. If floats are leaking or damaged, they should be replaced.

3. Inspect inlet needle valve and seat for wear or contamination. Replace these components as a set.

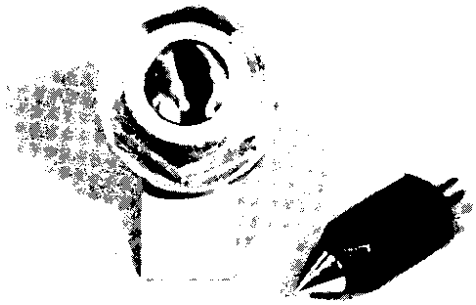

4. Inspect vacuum piston and rubber diaphragm. If the piston is scratched or the diaphragm is torn, the assembly must be replaced.

E. Adjustments

1. Float level adjustment

   Measure the distance from the bottom of the float to the float bowl gasket surface.Bend the tang on the float arm if any float level adjustment is necessary. Both floats must be at the same height. If the fuel level is too high, a rich air/fuel mixture will occur. If too low, a lean mixture will result.

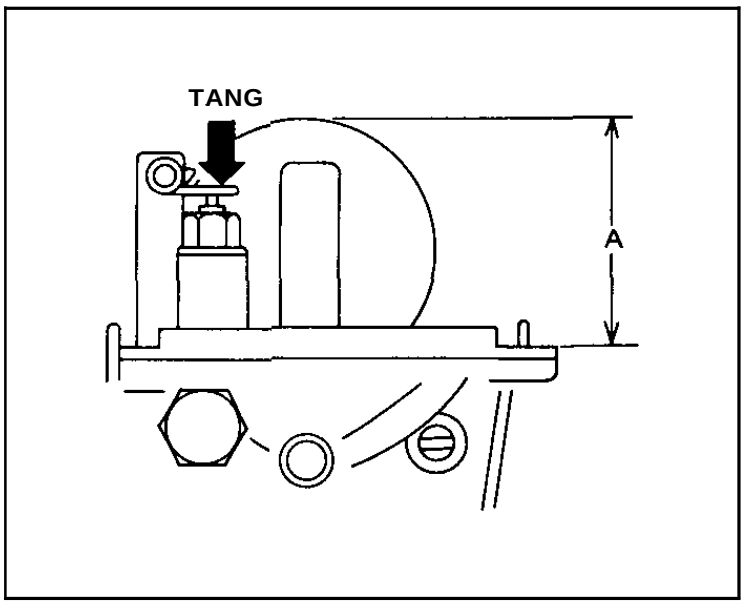

2. Jet needle adjustment

The mid-range air/fuel supply is affected by the position of the needle in the needle jet. If it is necessary to alter the mid-range air/fuel mixture characteristics of the machine, the jet needle position may be changed. Move the jet needle up for a leaner condition or toward the bottom position for a richer condition.

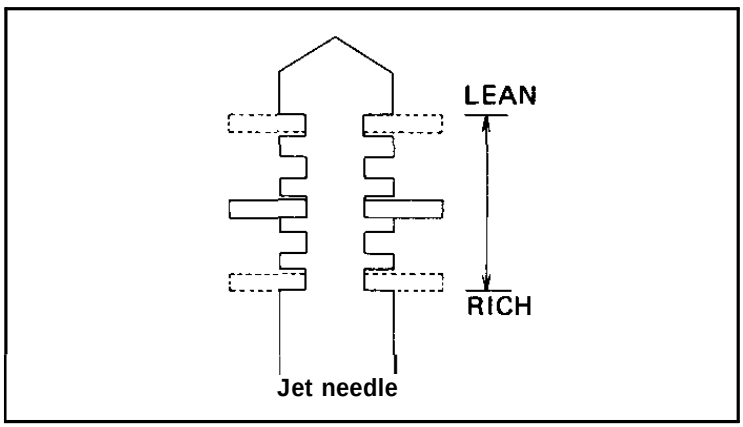

CHASSIS

5-1 FRONT WHEEL

A. Removal

1. Remove cotter pin from front axle nut.

2. Remove the front axle nut.

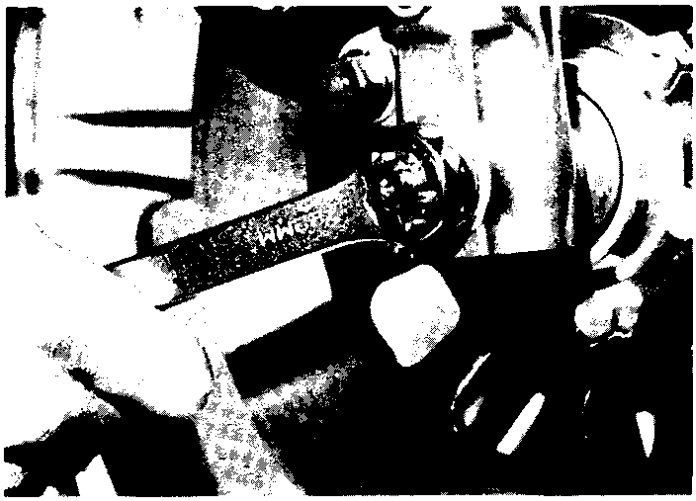

3. Loosen the two axle nut holder nuts at the bottom of the fork leg.

4. Raise the front wheel of the machine by placing suitable stand under the engine.

5. Remove the front wheel axle by simultaneously twisting and pulling out on the axle. Then remove the wheel assembly. The speedometer gear unit housing must be removed.

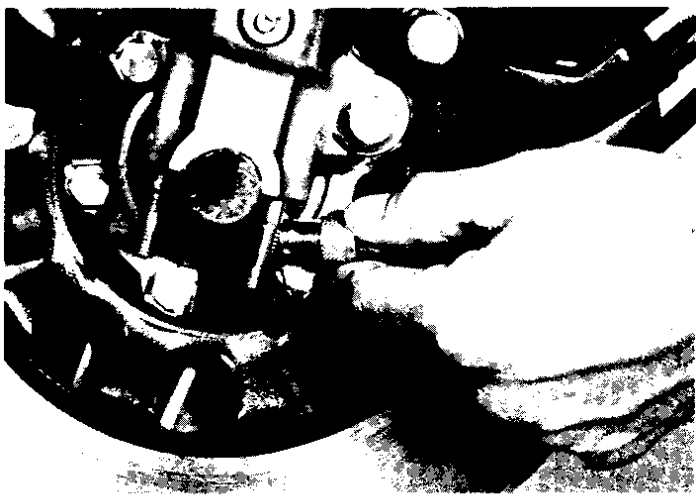

B. Front Axle Inspection

Remove any corrosion from axle with emery cloth. Place the axle on a surface plate and check for bends. If bent, replace axle.

C. Front Wheel Inspection

1. Check for cracks, bends or warpage of wheels. If a wheel is deformed or cracked, it must be replaced.

2. Check wheel run-out. If deflection exceeds tolerance, check wheel bearing or replace wheel as required.

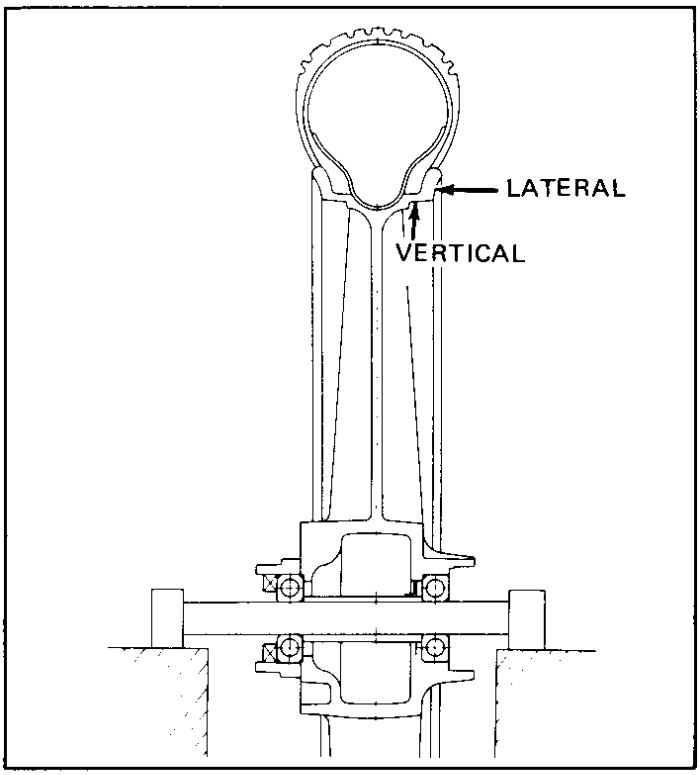

Rim run-out limits:

Vertical -- 2mm (0.08 in.)
Lateral -- 1mm (0.04 in.)

3. Check wheel balance. Rotate wheel lightly several times and observe resting position. If wheel is not statically balanced, wheel will come to rest at the same position. Install balance weight at lighter position (at top) as illustrated.

NOTE: The wheel should be balanced with brake discs installed.

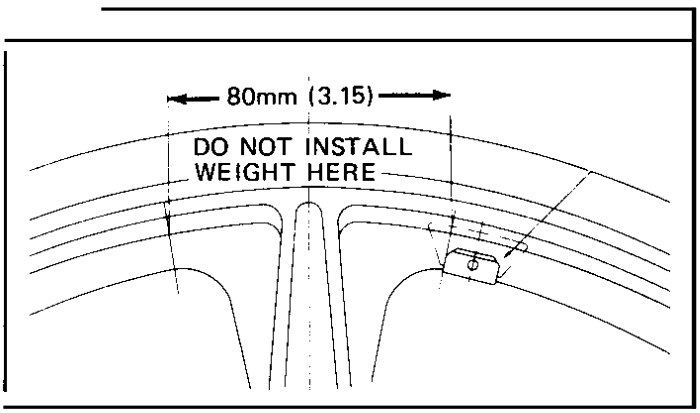

D. Replacing Wheel Bearings

If the bearings allow play in the wheel hub or if wheel does not turn smoothly, replace the bearings as follows:

1. Clean the outside of the-wheel hub.

2. Drive the bearing out by pushing the spacer aside and tapping around the perimeter of the bearing inner race with a soft metal drift pin and hammer. The spacer "floats" between the bearings. Both bearings can be removed in this manner.

3. To install the wheel bearing, reverse the above sequence. Be sure to grease the bearing before installation. Use a socket that matches the outside race of the bearing as a tool to drive in the bearing.

CAUTION: Do not strike the center race or balls of the bearing. Contact should be made only with the outer race.

E. Installing Front Wheel

When installing front wheel, reverse the removal procedure. Note the following points:

1. Lightly grease lips of front wheel oil seals and gear teeth of speedometer drive and driven gears. Use lightweight lithium soap basegrease.

2. Make sure there is enough gap between disc pads.

3. Check for proper engagement of the boss on the outer fork tube with the locating slot on speedometer gear unit housing.

4. Always secure the front wheel axle as follows:

a. Tighten the front axle nut.

Axle nut torque:
8.3~13 m-kg (60~94 ft-lb)

b. Tighten axle holder nuts. First tighten nut on front end of axle holder, then tighten nut on rear end.

Holder nut torque:
1.1~1.8 m-kg (8.0~13.0 ft-lb)

c. Install a new cotter pin.

5-2 REAR WHEEL

A. Removal

1. Place machine on center stand.

2. Raise the seat. Unscrew rear fender installation bolts until their threaded portion iscompletely out. Raise fender. Reinsert bolts asstoppersto support raised fender.

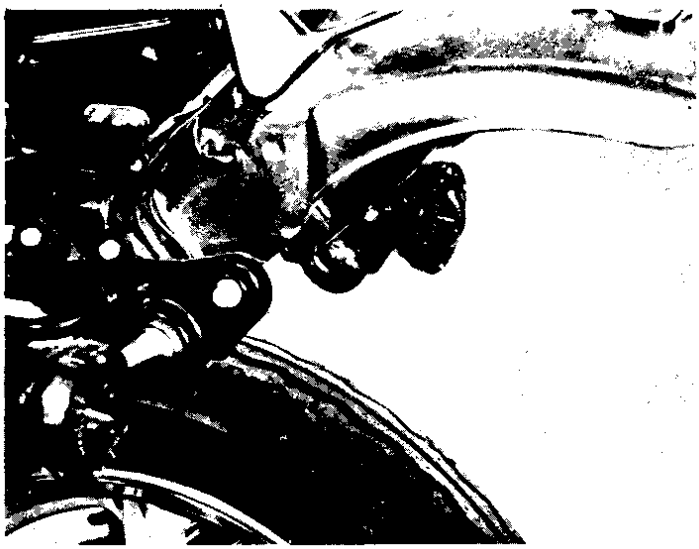

3. Remove the muffler protector.

4. Remove the axle nut cotter pin and the axle nut.

5. Loosen the rear axle pinch bolt.

6. While supporting the brake caliper, pull out the rear axle.

7. Hold up the brake caliper assembly and place it on the hook of the rear arm.

8. Move the wheel to the right side to separate it from the final gear case and remove the rear wheel.

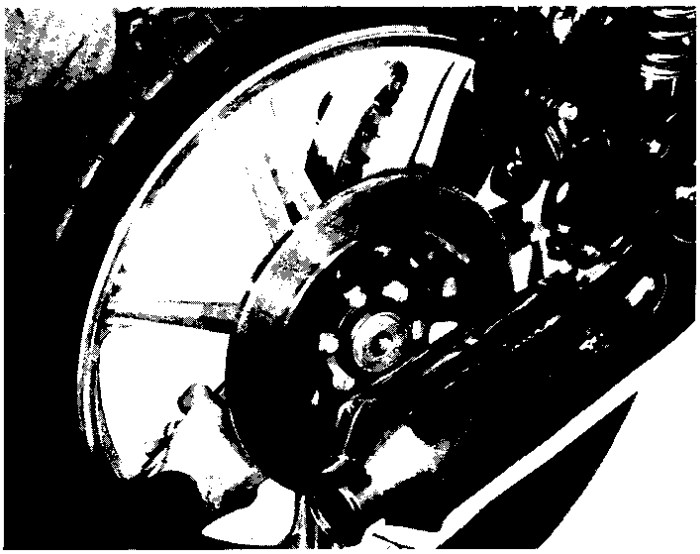

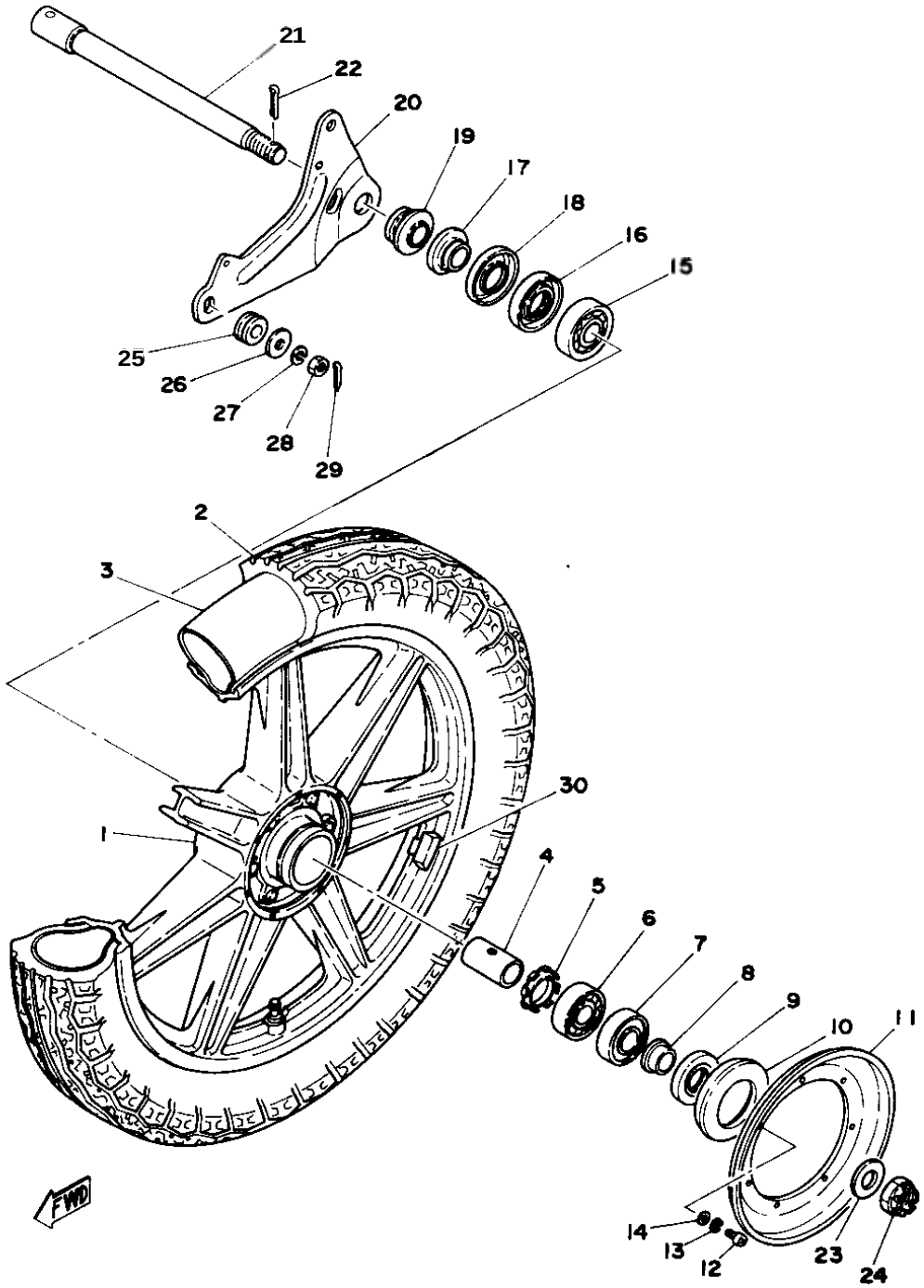

1	CAST WHEEL, rear (2.15-18)	16	OIL SEAL (SO-27-52-5)
2	TIRE, rear (4.00-18-4PR)	17	COLLAR, shaft
3	TUBE, rear (4.00-18)	18	COVER, dust
4	SPACER, bearing	19	COLLAR
5	FLANGE, spacer	20	PLATE, stopper torque
6	BEARING (B6204)	21	SHAFT, wheel
7	BEARING (B6204RS)	22	PIN, cotter
8	COLLAR	23	WASHER, plate
9	OIL SEAL (SD-25-47-7)	24	NUT, shaft
10	SEAL,dust	25	SPACER
11	COVER, plate dust	26	WASHER, plain
12	SCREW, pan head	27	WASHER, spring
13	WASHER, spring	28	NUT, hexagon
14	WASHER, plate	29	PIN, cotter
15	BEARING (B6304Z)	30	BALANCER, wheel

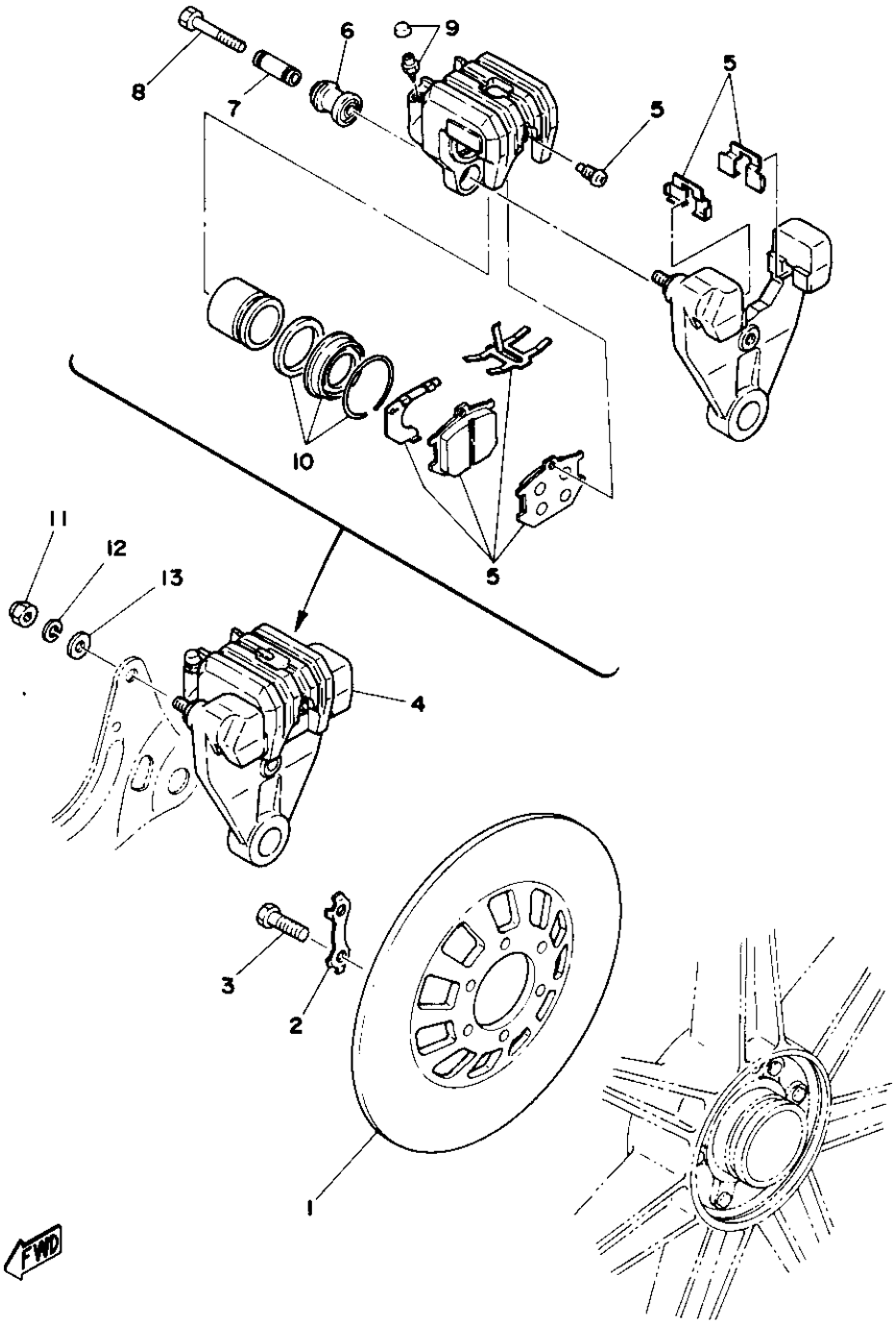

1 DISK, rear brake
2 WASHER, lock
3 BOLT, hexagon
4 CALIPER ASS'Y, rear
5 CALIPER PAD KIT
6 BUSHING, boot
7 SLEEVE
8 BOLT, support
9 SCREW, bleed with cap
10 CALIPER SEAL KIT
11 NUT, crown
12 WASHER, spring
13 WASHER, plate

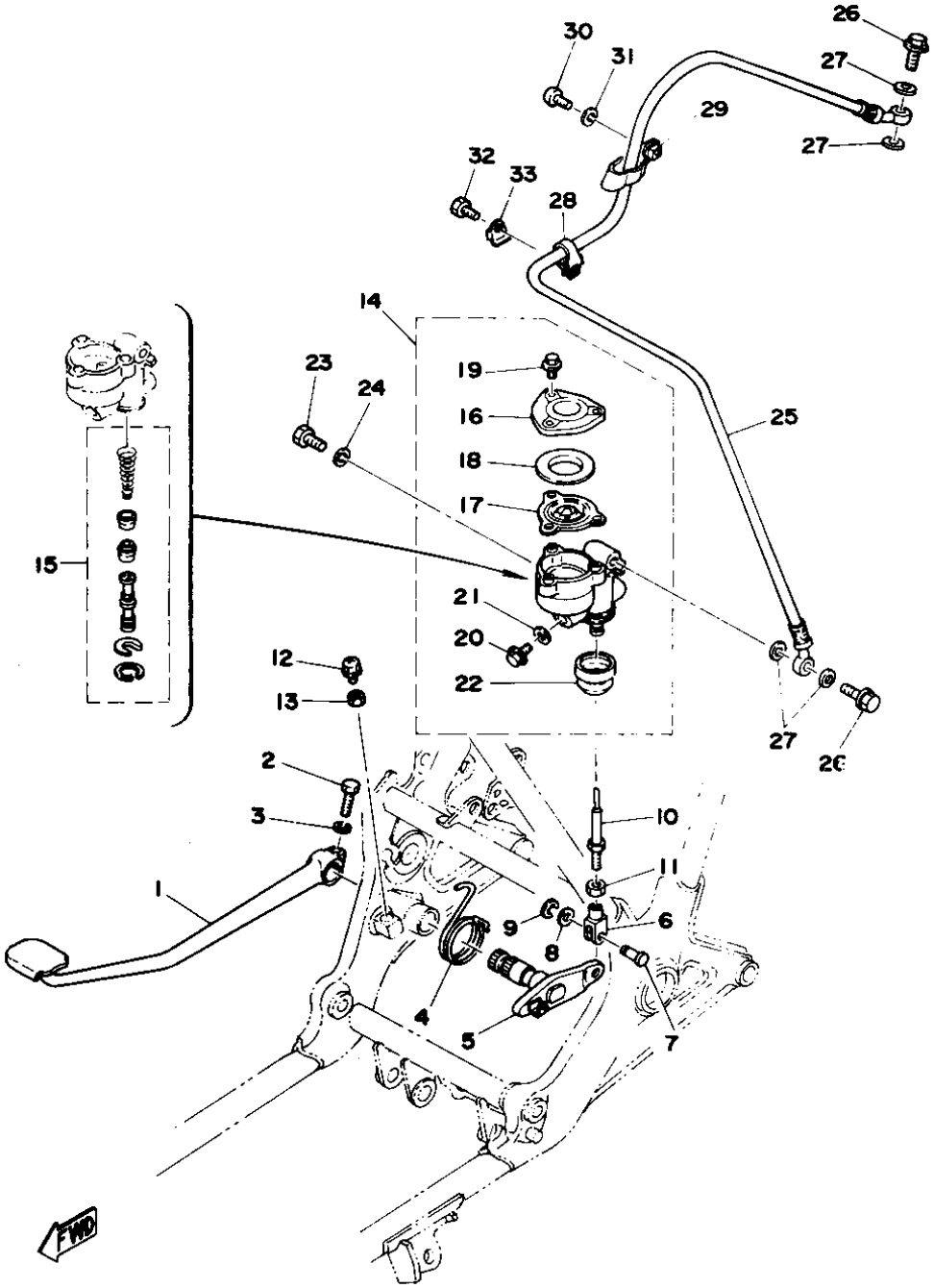

1 PEDAL, brake
2 BOLT, hexagon
3 WASHER, spring
4 SPRING, torsion
5 SHAFT, brake pedal
6 JOINT
7 PIN
8 WASHER, plate
9 CIRCLIP (E-6)
10 ROD, brake
11 NUT, hexagon
12 SCREW
13 NUT, adjusting
14 MASTER CYLINDER ASS'Y, rear
15 CYLINDER KIT, master
16 CAP, reservoir
17 DIAPHRAGM, reservoir
18 BUSHING, diaphragm
19 BOLT, cap
20 BOLT, plug
21 GASKET
22 BOOT, master cylinder
23 BOLT, hexagon
24 WASHER, spring
25 HOSE, rear brake
26 BOLT, union
27 WASHER, plain
28 CLAMP 1
29 CLAMP 2
30 SCREW, pan head
31 WASHER, spring
32 BOLT
33 WASHER, lock

NOTE: Do not depress the brake pedal when the wheel is off the machine so that the caliper piston is not forced out of thecylinder.

9. To install the rear wheel, reverse the removal procedure.

B. Rear Axle Inspection

(See Front Wheel, Axle Inspection Procedure.)

C. Replacing Wheel Bearings

Rear wheel bearing replacement is similar to the procedure for the front wheel.

D. Rear Wheel Inspection

(See Front Wheel, Inspection Procedures.)

E. Installing Rear Wheel

1. Lightly grease lips of rear wheel oil seals.

2. Make sure the brake pads are installed properly and that there is enough gap to install the rear disc.

3. Install wheel assembly and axle.

   NOTE: When installing the rear wheel, be sure the splines on the wheel hub fit into the final gear case.

   Always use a new cotter pin on the axle nut.

Torque:
Axle nut: 12~18 m-kg (87~130 ft-lb)
Axle pinch bolt: 0.45~0.75 m-kg (3~5 ft-lb)

5-3 BRAKES

CAUTION: Disc brake components rarely require disassembly. Do not disassemble components unless absolutely necessary. If any hydraulic connection in the system is opened, the entire system should be disassembled, drained, cleaned and then properly filled and bled upon reassembly.

CAUTION: Do not use solvents on brake internal components. Solvents will cause seals to swell and distort. Use only clean brake fluid for cleaning. Use care with brake fluid. Brake fluid is injurious to eyes and will damage painted surfaces.

A. Caliper Pad Replacement

1. It is not necessary to disassemble the brake fluid hoses to replace the brake pads.

2. Remove the caliper support bolt.

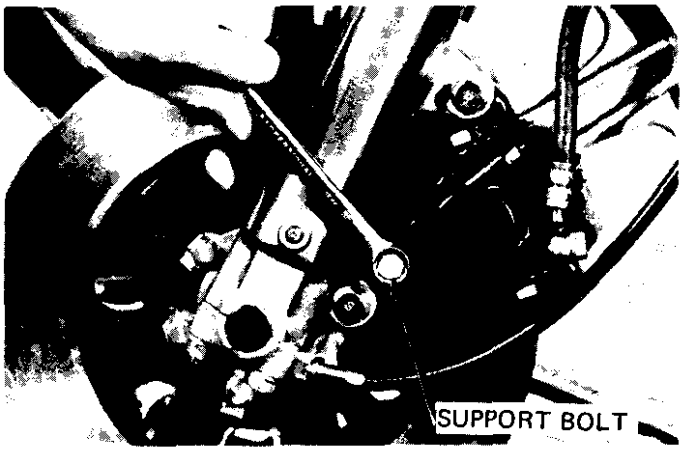

3. Remove the Phillips screw that holds the brake pads.

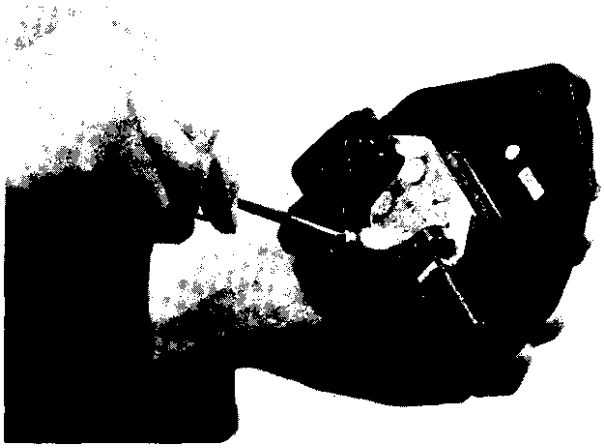

4. Pull caliper cylinder off caliper frame.

5. Install new brake pads. Replace pads as a set. Replace the following when pads are replaced:

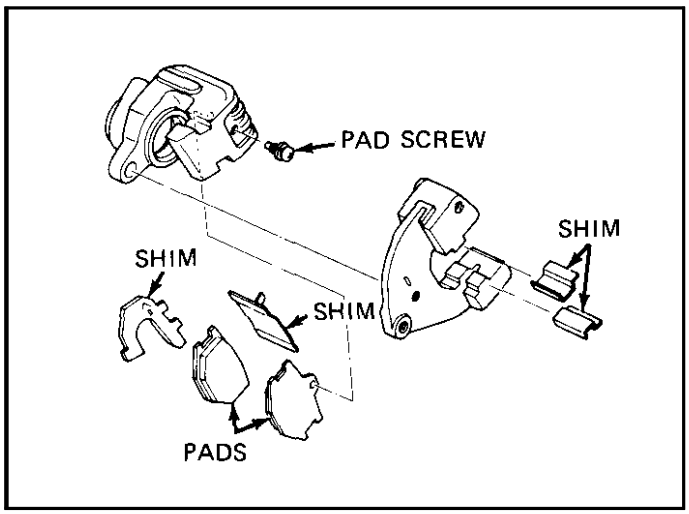

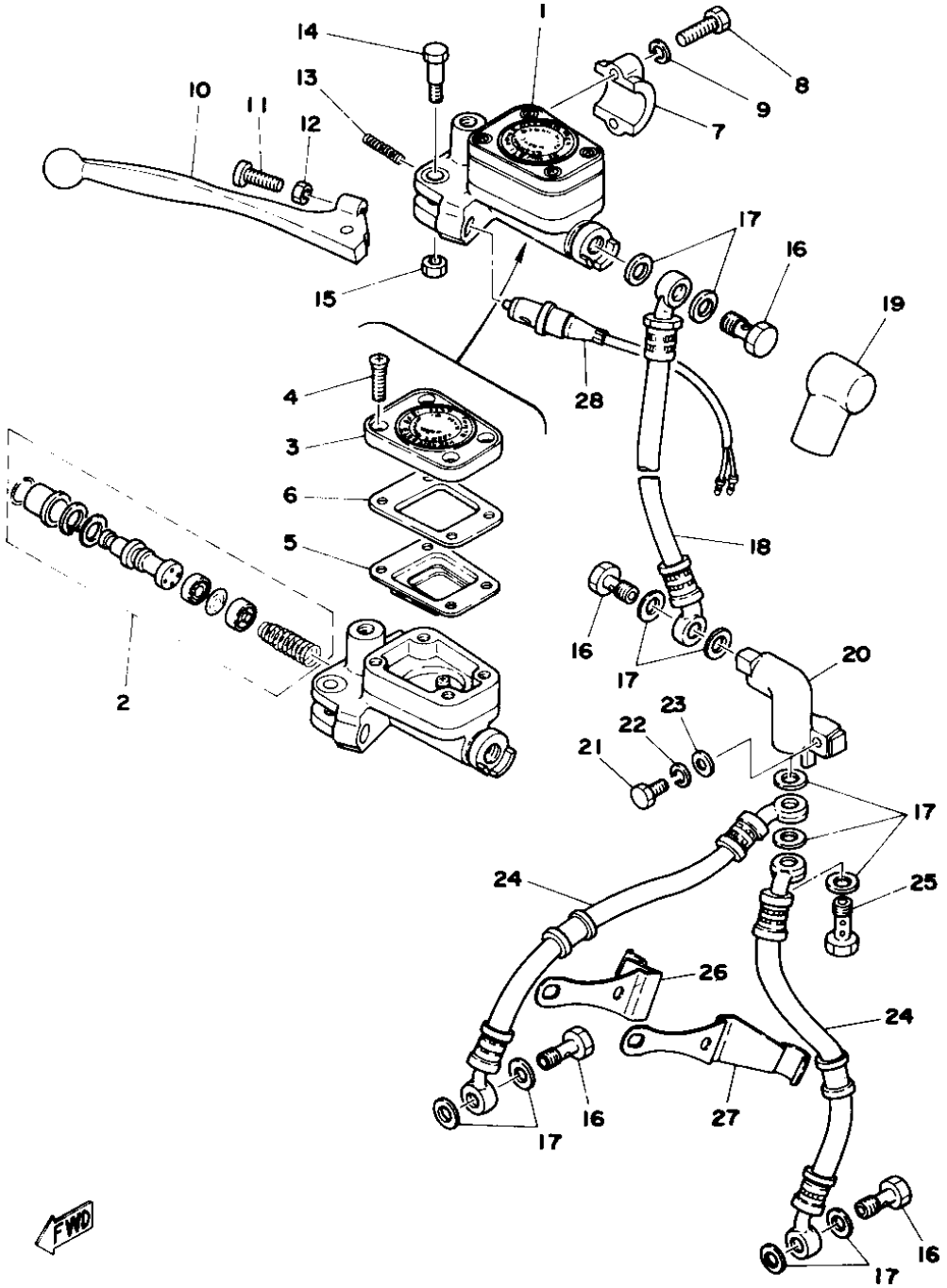

1	MASTER CYLINDER ASS'Y, front	15	NUT
2	CYLINDER KIT, master	16	BOLT, union
3	CAP, reservoir	17	WASHER
4	SCREW, cap	18	HOSE, brake 1
5	DIAPHRAGM, reservoir	19	BOOT, master cylinder
6	BUSHING, diaphragm	20	JOINT
7	BRACKET, master cylinder	21	BOLT, hexagon
8	BOLT, hexagon	22	WASHER, spring
9	WASHER, spring	23	WASHER, plate
10	LEVER, right	24	HOSE, brake 2
11	SCREW	25	BOLT, union
12	NUT	26	HOLDER, brake hose right
13	SPRING	27	HOLDER, brake hose left
14	BOLT	28	FRONT STOP SWITCH ASS'Y

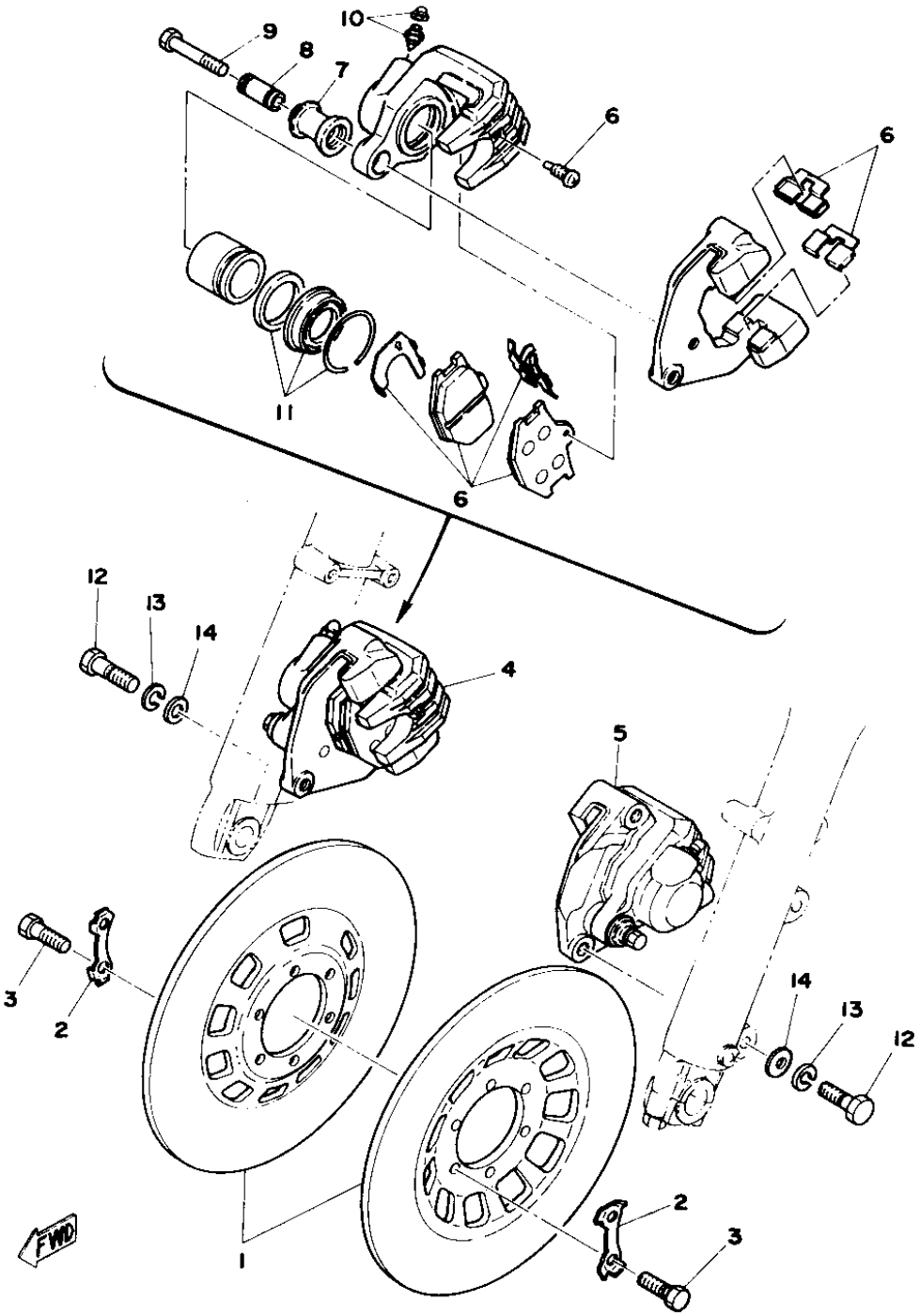

1 DISK, front brake
2 WASHER, lock
3 BOLT, hexagon
4 FRONT CALIPER ASS'Y, right
5 FRONT CALIPER ASS'Y, left
6 CALIPER PAD KIT
7 BUSHING, boot (with grease)
8 SLEEVE
9 BOLT, support
10 SCREW, bleed with cap
11 CALIPER SEAL KIT
12 BOLT, hexagon
13 WASHER, spring
14 WASHER, plate

6. Lightly grease the surface of the shim that contacts the pad. Bend each tab of the shim over the brake pad. The arrow on the shim must be in the turning direction of the wheel.

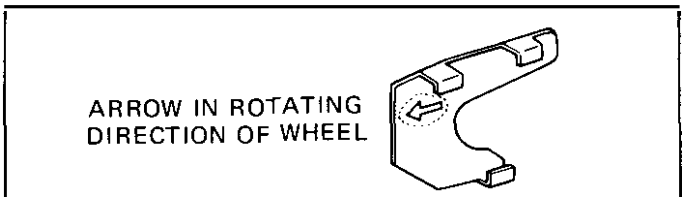

B. Caliper Disassembly (Front and Rear)

1. Remove caliper brake hose. Allow caliper assembly to drain into a container.

2. Place the open hose end into the container and pump the old fluid out.

3. Remove caliper support bolt and pad securing screw as in Caliper Pad Replacement procedure.

4. Remove caliper assembly from caliper frame.

5. Remove retaining ring and dust seal.

6. Carefully force the piston out of the caliper cylinder with compressed air. Never try to pry out the piston.

CAUTION: Cover the piston with a rag. Use care so that piston does not cause injury as it is expelled from the cylinder.

7. Remove piston seal.

C. Master Cylinder Disassembly

1. Front

a. Disconnect brake light wire.

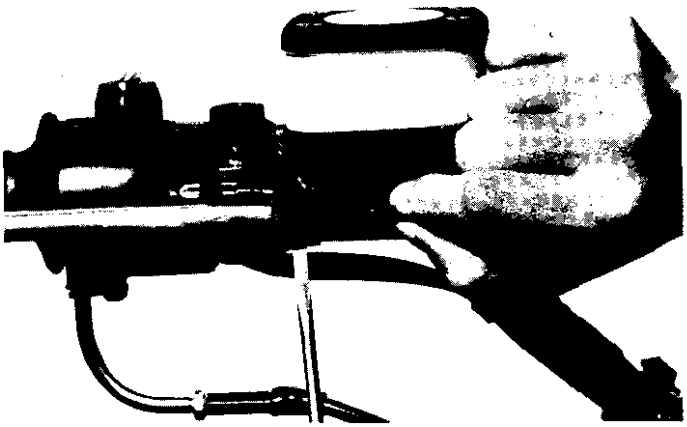

b. Remove brake lever and spring.

c. Remove brake hose.

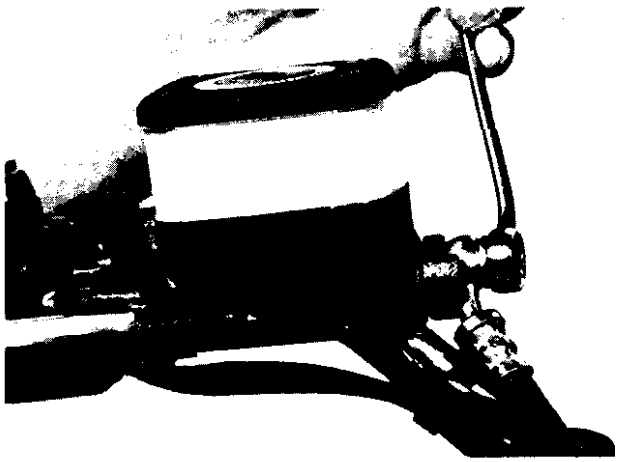

d. Remove master cylinder from handlebars. Remove cap and drain remaining fluid.

2. Rear

a. Remove brake hose.

b. Remove two (2) bolts holding master cylinder to frame. Remove reservoir cap and drain brake fluid.

NOTE: The following steps 3 and 5 apply to both front and rear systems.

3. Remove master cylinder dust boot,

4. Remove snap ring.

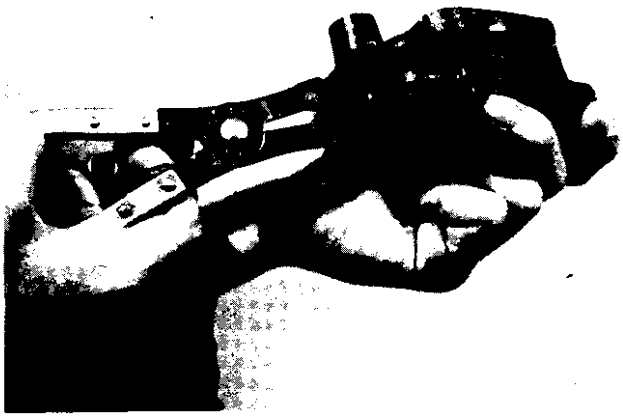

5. Remove master cylinder cup assembly. Note that the cylinder cups are installed with the larger diameter (lips) inserted first.

D. Brake Inspection and Repair

Recommended Brake Component Replacement Schedule:	
Brake pads.	As required
Piston seal, dust seal	Every two years
Brake hoses.	Every four years
Brake fluid	Replace only when brakes are disassembled

1. Replace caliper piston if it is scratched.

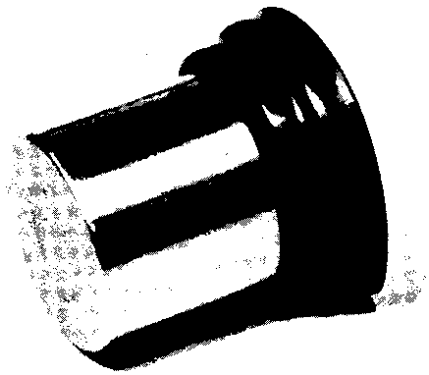

2. Replace any brake pad worn beyond limits. Replace brake pads as a set.

CHECK WEAR ON DISC BRAKE PAD

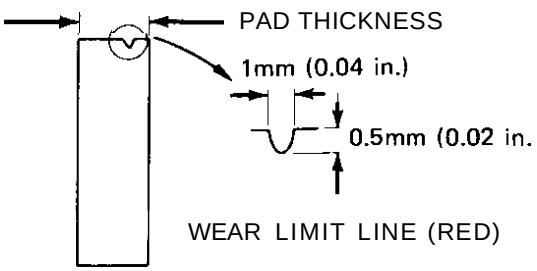

Wear limit: front and rear
5.5mm (0.18 in.)

See Caliper Pad Replacement procedure for parts to be replaced when pads are replaced.

3. Replace piston and dust seals if damaged. Replace seals every two years.

4. Inspect master cylinder body. Replace if scratched. Clean all passages with new brake fluid.

5. Inspect brake hoses. Replace every four years or if cracked, frayed or damaged.

6. Check for wear and deflection of disc (front and rear).

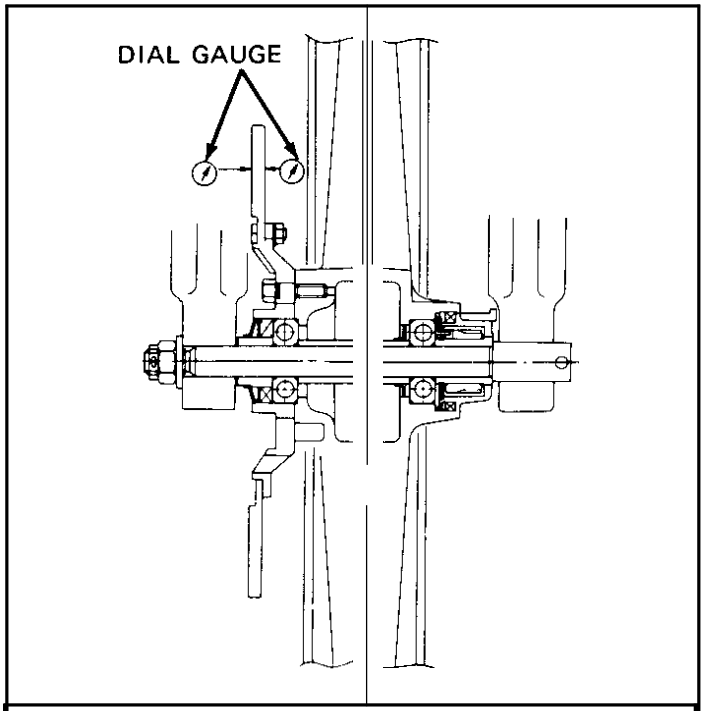

Maximum deflection: 0.15mm (.006 in.)
Minimum disc thickness: 6.5mm (0.26 in.)

If disc is worn beyond minimum thickness or deflection exceeds specified amount, replace disc.

E. Brake Reassembly

1. All internal parts should be cleaned in new brake fluid. Internal parts should be lubricated with brake fluid when installed.

2. Caliper Reassembly

Replace the following parts whenever a caliper is disassembled: bleed screw and cap, boot bushing, piston seal, dust seal, retaining ring.

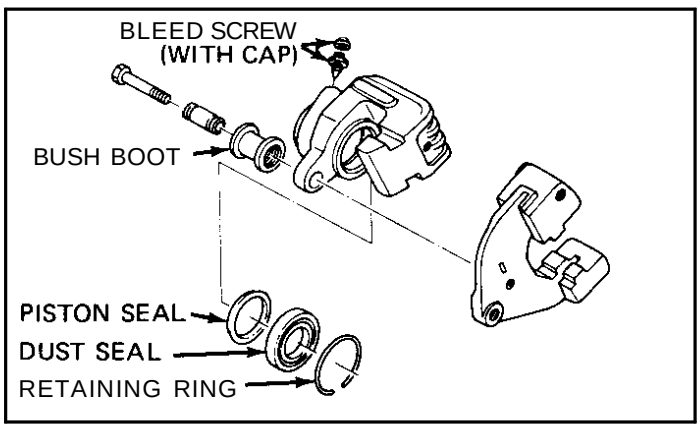

a. Install piston seal and piston. Place caliper cylinder into caliper frame.

b. Install pad spring, shim (with arrow) and retainer. The shim arrow is in the direction of wheel rotation. Install dust seal and clip.

c. Install pad spring and pads,

d. Install support bolt and remount caliper on brackets.

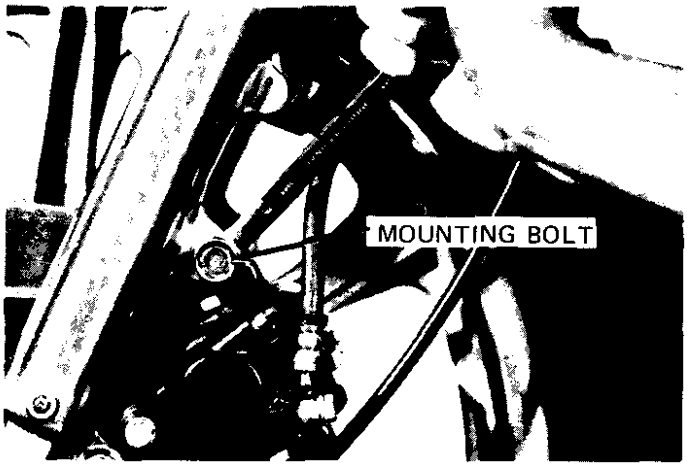

Support bolt torque:
1.5~2.0 m-kg (11~15 ft-lb)

Mounting bolt torque:
4.5~5.0 m-kg (28~35 ft-lbs)

3. Attach brake hoses (front and rear).

Brake hose torque:
2.3~2.8 m-kg (16~20 ft-lbs)

4. Master Cylinder Reassembly

Reassemble master cylinder as shown in illustration.

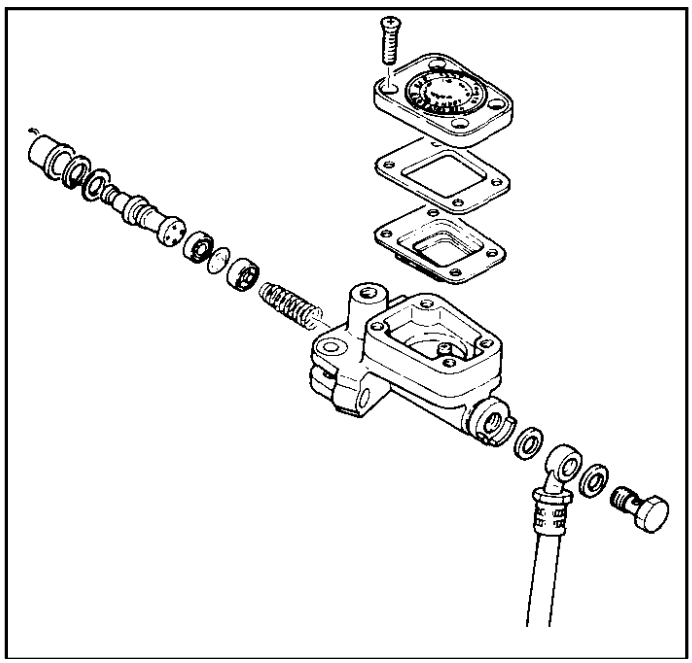

Brake hose torque: (all brake union bolts)
2.3~2.8 m-kg (16~20 ft-lbs)

5. Brake Disc Assembly

If brake disc has been removed from hub or is loose, tighten bolts. Use new locking washers and bend over locking tabs after bolts are tightened.

Disc bolt torque:
1.7~2.2 m-kg (12~16 ft-lbs)

6. Air Bleeding

CAUTION: If the brake system is disassembled or if any brake hose has been loosened or removed, the brake system must be bled to remove air from the brake fluid. If the brake fluid level is very low or brake operation is incorrect, bleed the brake system.

1. Add proper brake fluid to the reservoir. Install the diaphragm, being careful not to spill or overflow the reservoir.

2. Connect the clear plastic tube tightly to the caliper bleed screw. Put the end of the tube into a container.

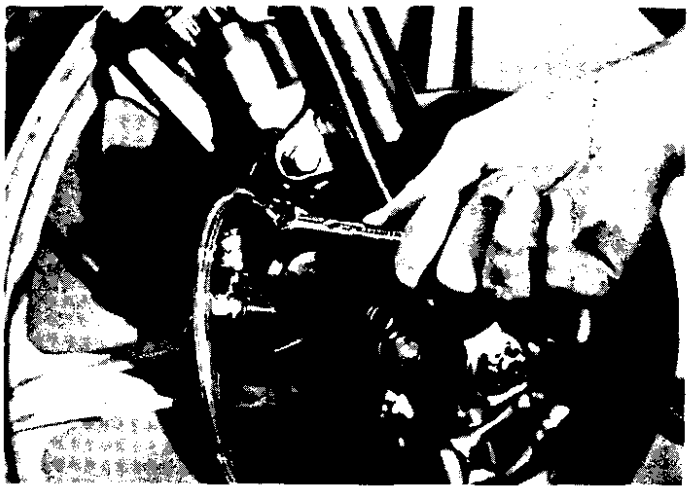

3. Slowly apply the brake lever or pedal several times. Pull in lever (push down pedal). Hold lever or pedal in "on" position. Loosen bleed screw. Allow the pedal or lever to travel slowly toward its limit. When the limit is reached, tighten bleed screw.

4. Continue step 3 until all air bubbles are removed from system.

NOTE: If bleeding is difficult, it may be necessary to let the brake system stabilize for a few hours. Repeat bleeding procedure.

5-4 WHEELS, TIRES, TUBES

A. Wheel Inspection

Wheels should be inspected frequently. Wheel run-out and balancing is discussed in Chapter 5-1. In addition, wheels must be carefully inspected for small cracks, bends or warpage. Any wheel damaged or beyond specified limits should be replaced. Do not attempt to straighten a bent wheel.

WARNING: XS750D aluminum wheels are not designed for use with tubeless tires.

B. Tire, Tube Removal

1. Remove valve cap, valve core and valve stem lock nut.
2. When all air is out of tube, separate tire bead from rim (both sides) by stepping on tire with your foot.
3. Use two (2) wide, flat tire irons with rounded edges to work the tire bead over the edge of the rim, starting 180° opposite the tube stem. Be careful not to pinch the tube as you do this.
4. After you have worked one side of the tire completely off the rim, slip the tube out. Be very careful not to damage the stem while pushing it back out of the rim hole.

NOTE: If you are changing the tire itself, then finish the removal by working the second bead off the rim.

C. Installation

Reinstall the tire and tube by reversing the disassembly procedure. After the tube has been installed, but before the tire has been completely slipped onto the rim, put a small amount of air into the tube. This removes any creases that might exist. Release the air and continue with reassembly. After the tire has been completely slipped onto the rim, make sure the stem comes out of the hole in the rim at a right angle to the rim. Finally, inflate the tire.

	Front Tire	Rear Tire
Normal riding	1.8 kg/cm² (26 psi)	2.0 kg/cm² (28 psi)
Continued high speed riding or riding with passenger	2.0 kg/cm² (28 psi)	2.3 kg/cm² (33 psi)

NOTE: Make sure the wheel is balanced every time the tire is replaced. (Refer to Front Wheel Inspection.)

5-5 FRONT FORKS

A. Removal and Disassembly

1. Disconnect speedometer cable. Disconnect brake calipers and remove front wheel. Place wooden wedge or other object into caliper assemblies to keep brake pads from falling out. Remove front fender.
2. Loosen pinch bolts on steering stem and crown and remove fork.
3. Remove fork tube caps, spring clips, spring stopper seats, and oil drain screws. Drain fork oil.
4. Remove Allen bolt from bottom of fork assembly. Pull inner tube out of outer tube.

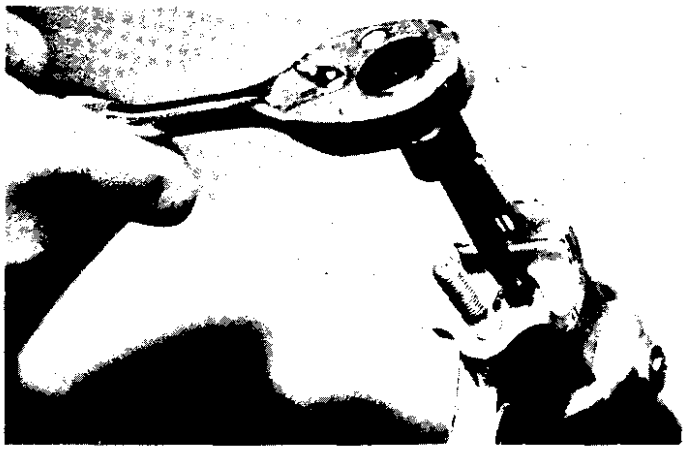

5. To remove fork seal, pull off dust cover. Remove spring clip over oil seal. Pry out oil seal, being careful to not damage the fork tube.

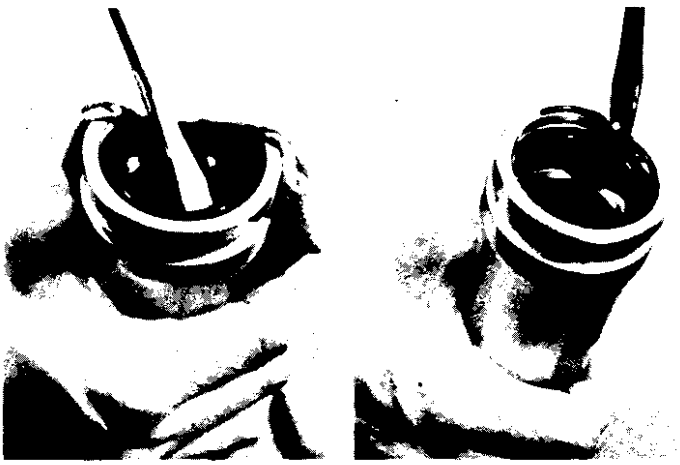

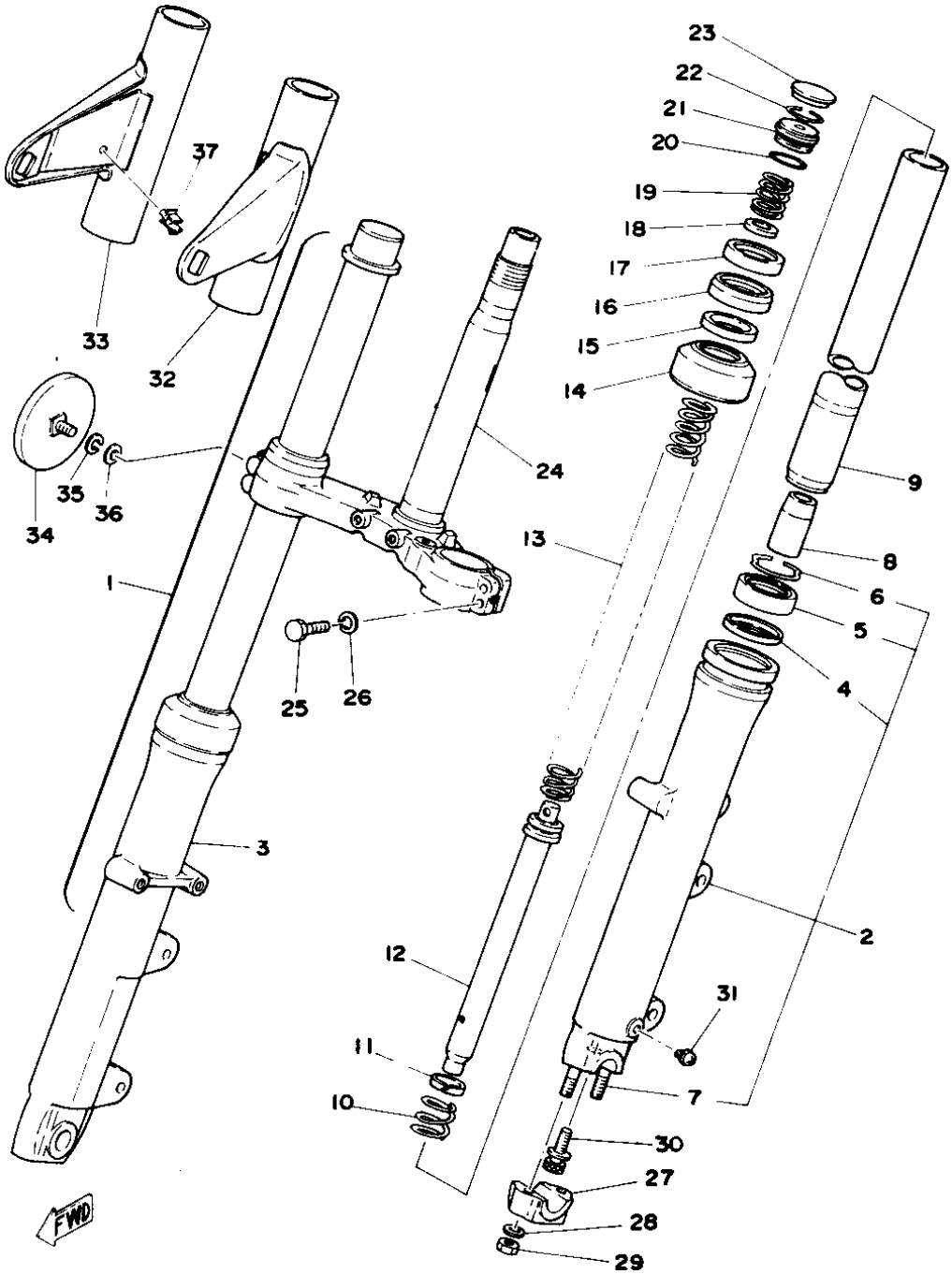

1	FRONT FORK ASS'Y	14	SEAL, dust	27	HOLDER, axle
2	FORK TUBE, outer left	15	GASKET	28	WASHER, plate
3	FORKTUBE, outer right	16	GUIDE, cover under	29	NUT, nylon
4	SEAL, spacer	17	GUIDE, cover upper	30	BOLT, hexagon socket head
5	OILSEAL	18	SEAT, spring upper	31	SCREW, drain
6	STOPPER RING, oil seal	19	SPRING	32	COVER, upper left
7	BOLT,stud	20	O-RING	33	COVER, upper right
8	PIECE, oil lock	21	SEAT, spring	34	REFLECTOR
9	INNER TUBE COMP.	22	RING, stopper	35	WASHER, spring
10	SPRING, rebound	23	CAP, front fork	36	WASHER, plain
11	RING, front fork piston	24	UNDER BRACKET COMP.	37	CLAMP
12	CYLINDER COMP., front fork	25	BOLT		
13	SPRING, front fork	26	WASHER, spring		

B. Inspection

1. Examine fork inner tube for scratches and straightness. If the tube is scratched severely or bent, it should be replaced.

2. If the lips of the oil seal are worn, or the oil seal is leaking, replace it.

3. Check the outer tube for dents. If any dent causes the inner tube to "hang up" during operation, the outer tube should be replaced.

4. Check the free length of the springs.

Top spring free length: 55.8mm (2.19 in.)
Bottom spring free length: 448.3mm (17.6 in.)

5. Check the o-ring on the top spring seat. If damaged, replace o-ring.

C. Assembly

1. Make sure all components are clean before assembly.

2. Apply oil to the fork seal and install the seal spacer and seal by pressing in with a large socket. Install retaining clip.

3. Install inner tube into outer tube. Install dust cover. Install and tighten Allen bolt and washer. Assembly procedure is the reverse of the disassembly procedure.

NOTE: When installing fork springs, the greater pitch should be at the bottom. The main fork spring has a small coil diameter at the bottom.

5-6 STEERING HEAD

A. Adjustment

(See Chapter 2-4 for Steering Head Adjustment.J

B. Removal

1. Remove front wheel, front forks and handle bars.

2. Remove front brake pipe junction.

3. Loosen steering stem pinch bolt. Remove stem bolt and washer.

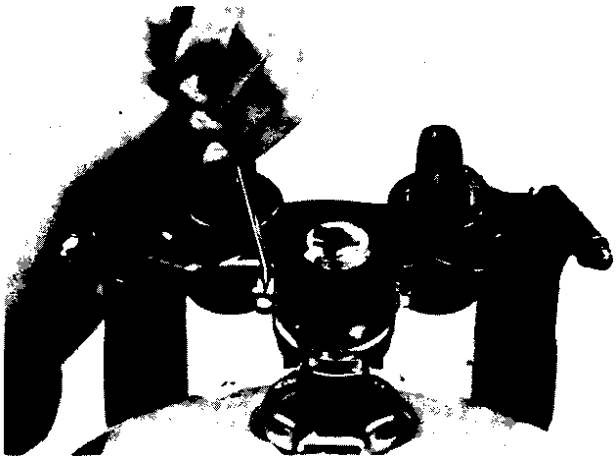

4. Remove steering crown.

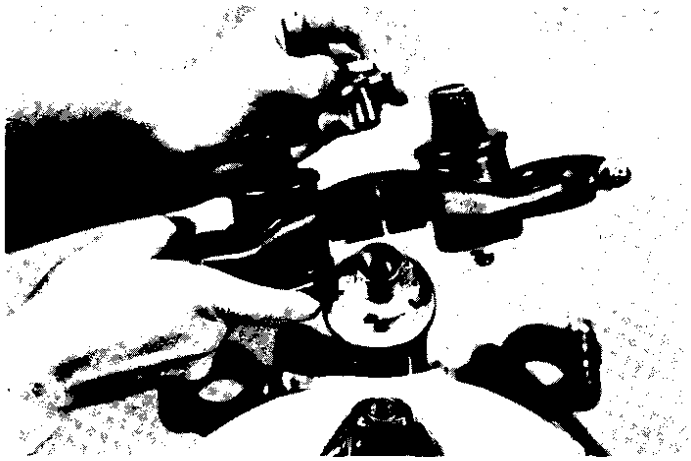

5. Remove top fitting nut.

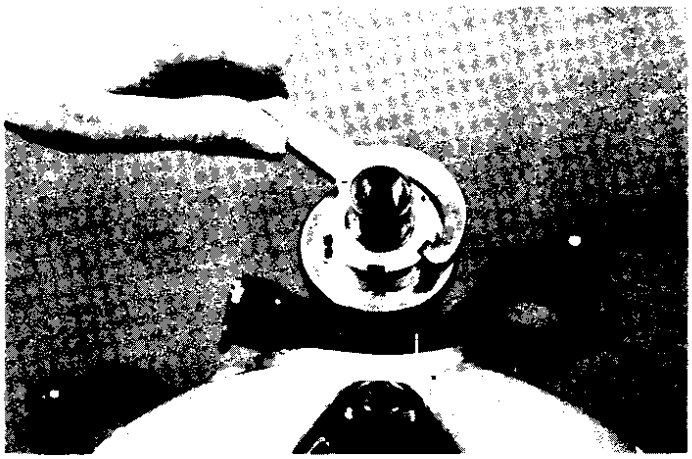

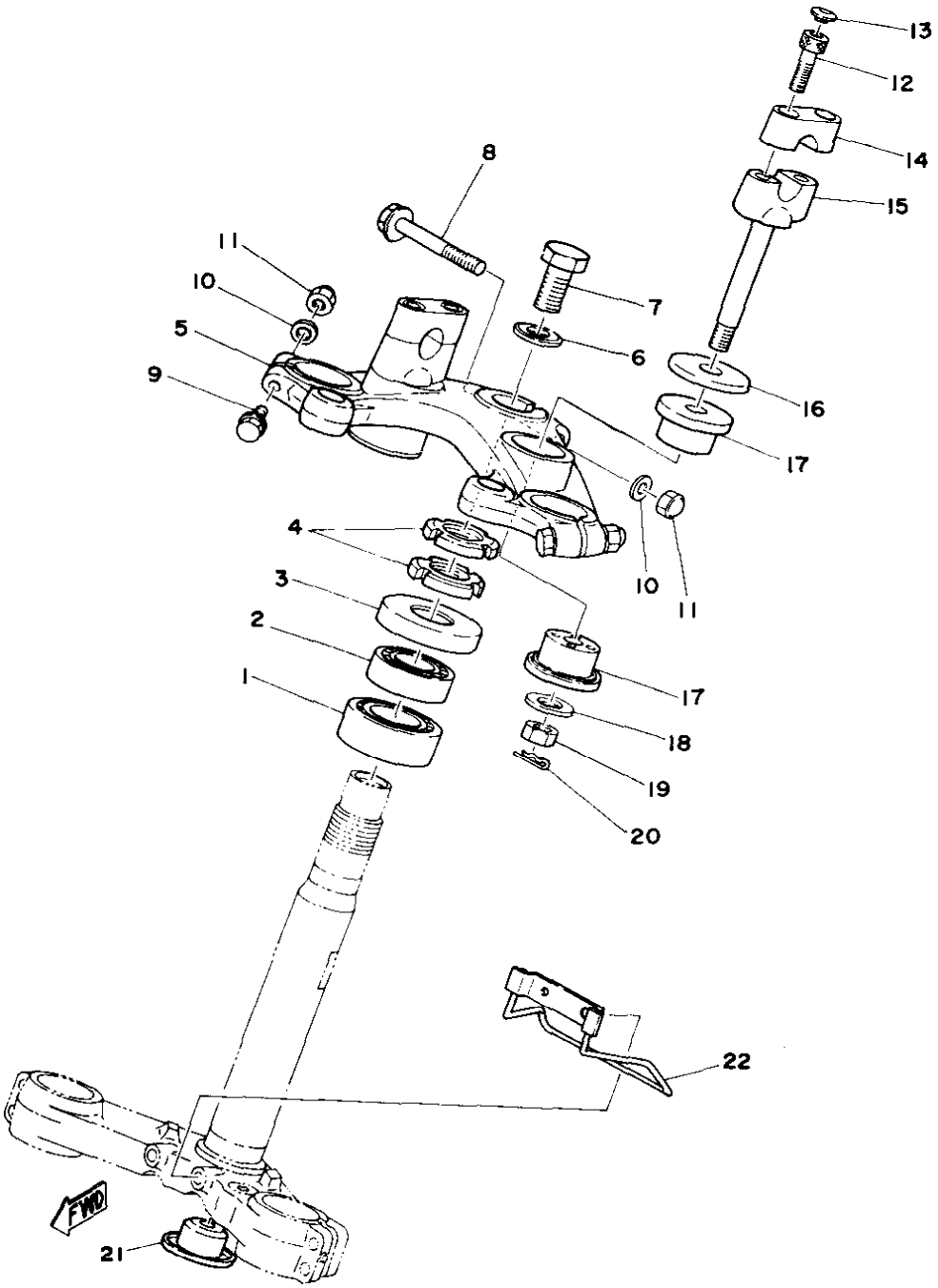

1 BEARING
2 BEARING
3 COVER, ball race 1
4 NUT, fitting
5 CROWN, handle
6 WASHER, plate
7 BOLT, stem
8 BOLT, pinch
9 BOLT, pinch
10 WASHER, plain
11 NUT, crown
12 BOLT, hexagon socket head cap
13 CAP, bolt
14 HOLDER, handle upper
15 HOLDER, handle under
16 WASHER
17 BUSHING, rubber
18 WASHER, plate
19 NUT, hexagon
20 CLIP
21 PLUG
22 GUIDE, wire

6. Support steering stem (underbracket) and remove bottom fitting nut.

7. Remove bearings.

C. Inspection

1. Wash bearings in solvent.

2. Inspect bearings for pitting or other damage. Replace bearings if pitted or damaged. Replace races when bearings are replaced.

3. Clean and inspect bearing races. If races are damaged, replace races and bearings.

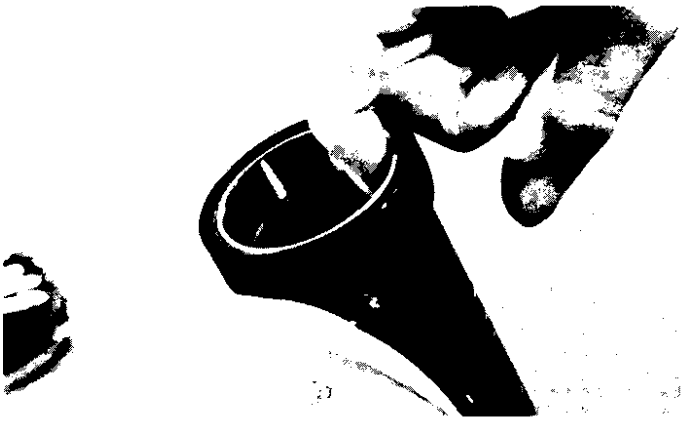

4. Install bearings in races. Spin bearings. If the bearings hang up or are not smooth in their operation in the races, replace bearings and races.

D. Reassembly

1. Grease bearings and races with wheel bearing grease.

2. Install steering stem (underbracket) and bearings.

3. Install bottom fitting nut. Tighten to approximately 1.0~1.2 m-kg (7~9 ft-lbs). Do not over-tighten. Tighten top fitting nut.

4. Continue reassembly in reverse assembly order.

5. When assembly is complete, check steering stem by turning it from lock to lock. If there is any binding or looseness, readjust steering stem tightness.

Pinch bolt torque: 1.3–2.3 m-kg (9~ 17 ft-lbs) Steering stem bolt torque: 6.6– 10.5 m-kg (48–76 ft-lbs)

5-7 SWING ARM

A. Inspection

1. Free Play Inspection

Remove rear wheel and shock absorbers. Grasp the swing arm and move it from side to side as shown. There should be no noticeable side play.

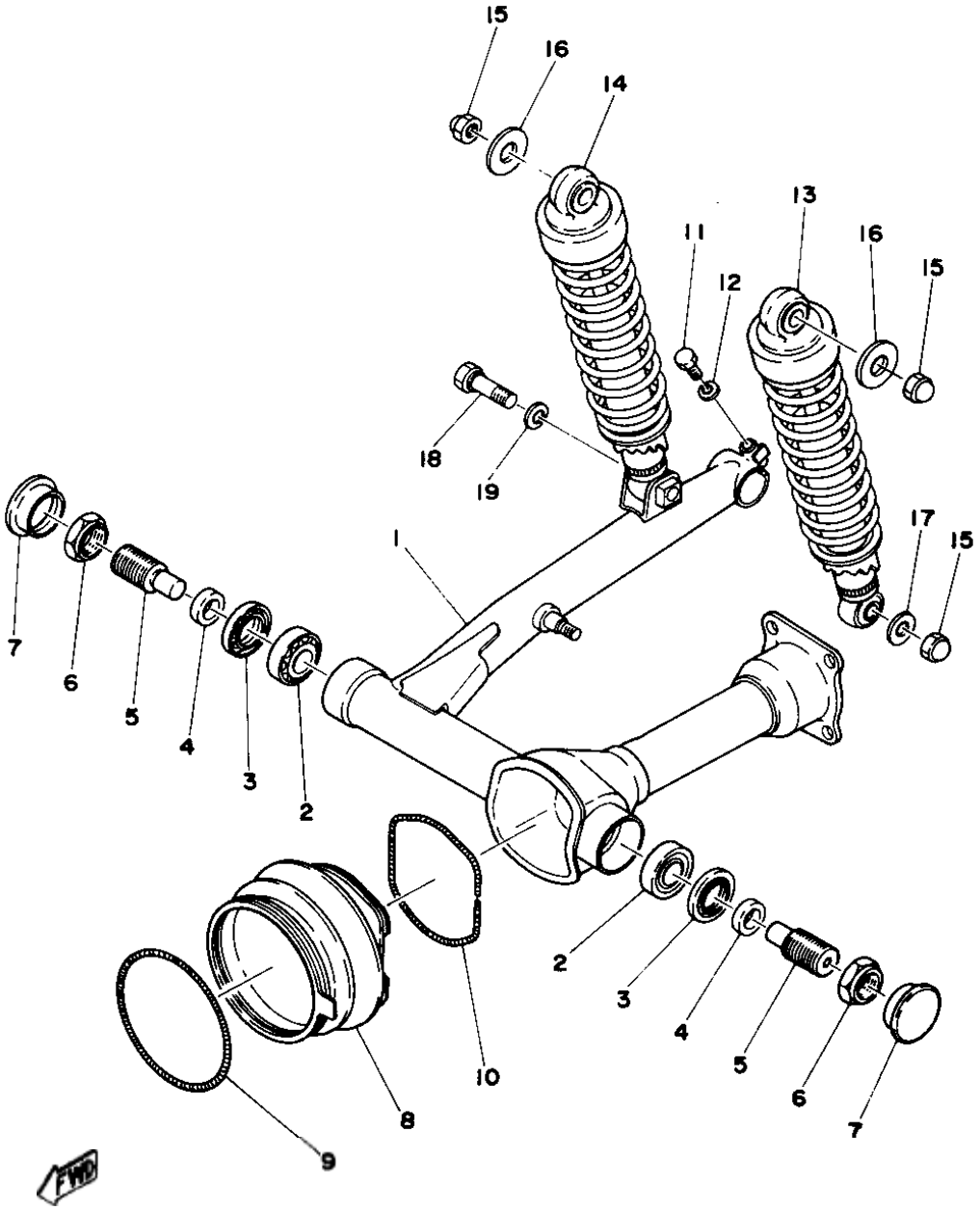

1 REAR ARM COMP.
2 BEARING, tapered roller
3 OIL SEAL (SD-25-40-5)
4 COLLAR (17-25-7)
5 SHAFT, pivot
6 NUT, pivot shaft
7 PLUG
a BOOT, rubber
9 SPRING, tension
10 SPRING, tension
11 BOLT, hexagon
12 WASHER, spring
13 REAR CUSHION ASS'Y, left
14 REAR CUSHION ASS'Y, right
15 NUT, cap
16 WASHER
17 WASHER, plate (10-25-2.0)
18 BOLT
19 WASHER, spring

2. The swing arm is mounted on tapered bearings. Move the swing arm up and down as shown. The swing arm should move smoothly, without tightness, binding or rough spots that could indicate damaged bearings.

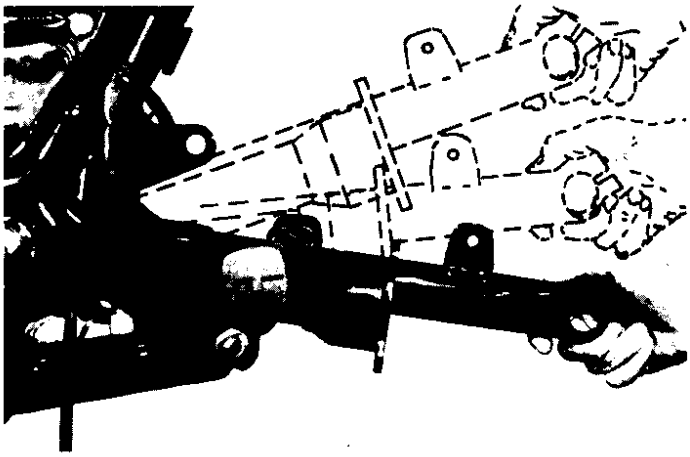

B. Adjustment

1. Remove pivot shaft plugs from left and right sides of the swing arm.

2. Measure gap between frame and swing arm on left and right sides. There should be no more than 1.6mm (0.062 in.) difference between the left and right gaps.

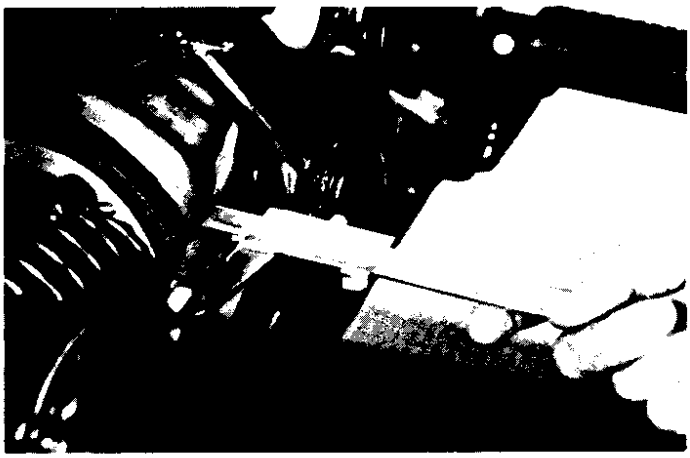

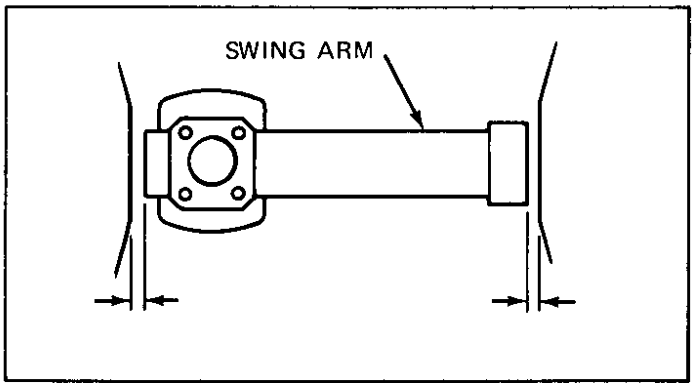

NOTE: It may be easier to inspect the gaps with the rear wheel removed; however, such removal is not necessary.

3. If the left and right gaps differ by more than the limit (1.6mm), adjust as follows:

a. Loosen both the left and right pivot shaft nuts.

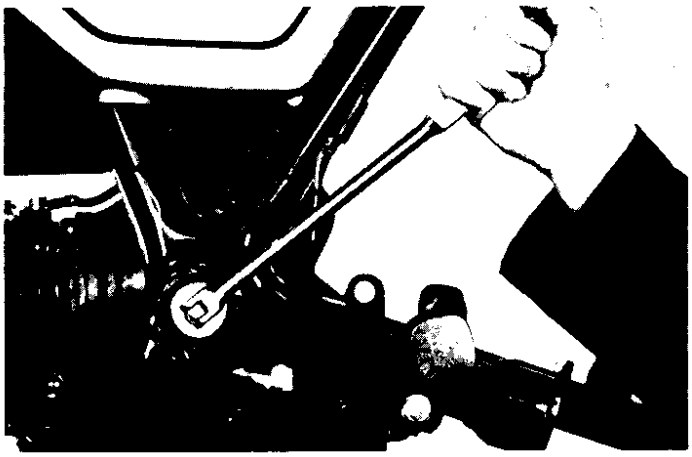

b. Loosen pivot shaft on the side of the greater swing arm/frame gap. Loosen only slightly (counterclockwise, approximately one-half turn). After loosening, tighten the opposite pivot shaft (clockwise) to 0.5~0.6 m·kg (43~52 in·lbs).

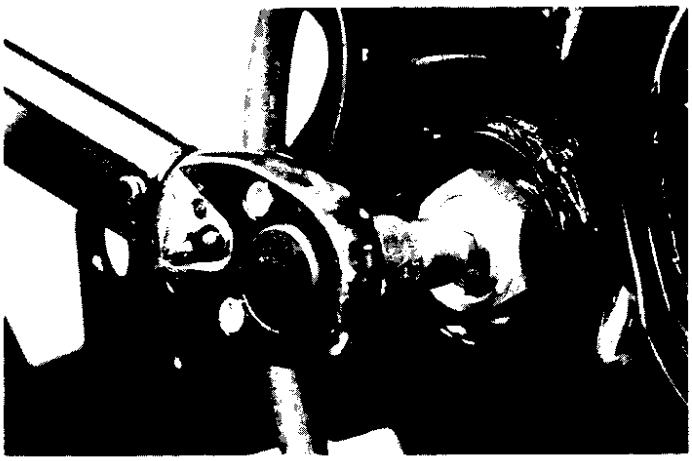

c. Measure gap again between frame and swing arm. If the left and right gaps are not within 1.6mm (0.062 in.) of each other, repeat step (b).

d. When the left and right gaps are adjusted properly, tighten pivot shaft lock nut.

NOTE: Do not allow pivot shaft to turn while tightening lock nut.

Pivot shaft lock nut torque: 8.0~10.0 m·kg (58~72 ft·lbs)

C. Removal

1. Remove middle gear flange holding bolt.

2. Remove rear wheel and shock absorbers. Remove rear brake ass'y.

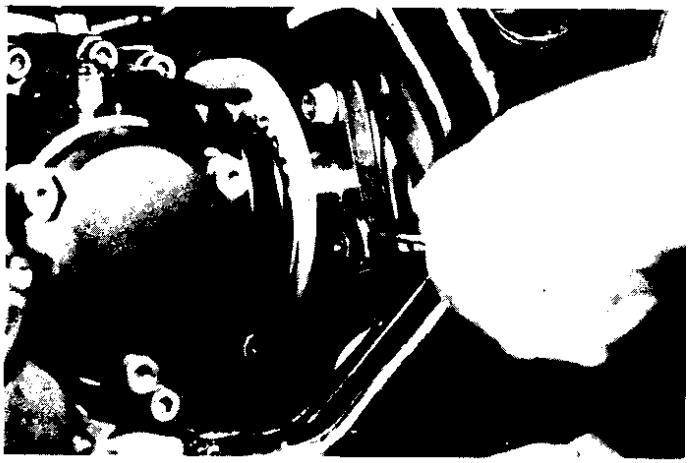

3. Remove final gear assembly and drive shaft.

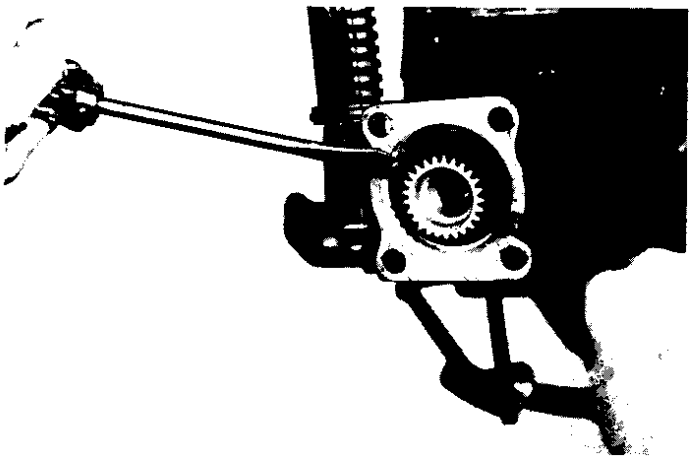

4. Remove swing arm pivot plugs, pivot shafts and swing arm.

D. Inspection and Lubrication

1. Remove oil seals and bearings. Inspect bearings for pitting or other damage. Make sure that bearings roll freely. If a bearing is damaged, both bearings and both sets of inner and outer bearing races should be replaced.

NOTE: When installing new bearings, grease liberally with lithium base, waterproof wheel bearing grease.

2. Always replace grease seals when bearings are removed.

3. Examine rubber boot for damage. Replace if damaged.

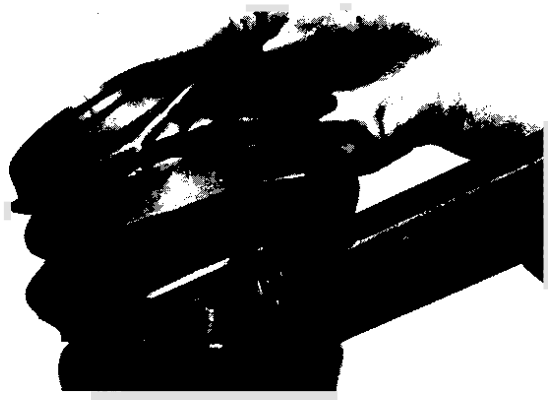

E. Installation

Installation of the swing arm can be accomplished by reversing the removal procedure. Observe adjustment procedures for obtaining equal frame/swing arm spacing.

5-8 REAR SHOCK ABSORBER

A. Removal

1. Remove one (1) rear shock absorber at a time, inspect and reinstall before removing the other.

B. Inspection

1. Check the rod. If it isbentordamaged, replace the shock absorber.

2. Check for oil leakage. If oil leakage is evident, replace the shock absorber.

3. Operate shock absorber rod to checkdamping. There should be no noticeable damping as shock extends.

4. Install the shock absorber on the machine.

Rear shock absorber tightening torque: 2.3~3.7 m-kg (19.6~26.8 ft-lbs)

5-9 CABLES AND FITTINGS

A. Cable Maintenance

NOTE: See Maintenance and Lubrication intervals charts. Cable maintenance is primarily concerned with preventing deterioration through rust and weathering and providing proper lubrication to allow the cable to move freely within its housing. Cable removal is straightforward and uncomplicated. Removal will not be discussed within this section.

WARNING: Cable routing is very important. For details of cable routing, see the table routing diagrams at the end of the manual. Improperly routed, assembled or adjusted cables may make the vehicle unsafe for operation.

1. Remove the cable.

2. Check for free movement of cable within its housing. If movement is obstructed, check for fraying or kinking of cable strands. If damage is evident, replace the cable assembly.

3. To lubricate cable, hold in vertical position. Apply lubricant to uppermost end of cable. Leave in vertical position until lubricant appears at bottom. Allow excess to drain and reinstall.

NOTE: Choice of lubricant depends upon conditions and preferences. However, a semi-drying chain and cable lubricant will probably perform adequately under most conditions.

B. Throttle Maintenance

1. Remove Phillips head screws from throttle housing assembly and separate two halves of housing.

2. Disconnect cable end from throttle grip assembly and remove grip assembly.

3. Wash all parts in mild solvent and check contact surfaces for burrs or other damage. (Also clean and inspect right hand end of handlebar.)

4. Lubricate contact surfaces with light coat of lithium soap base grease and reassemble.

NOTE: Tighten housing screws evenly to maintain an even gap between the two halves.

5. Check for smooth throttle operation and quick spring return when released and make certain that housing does not rotate on handlebar.

5-10 FINAL DRIVE GEAR

NOTE: This section describes external inspection only. See shaft drive section page 102 for overhaul and adjustment.

1. inspect exterior for leakage. Refer to Shaft Drive Service Section for correction of leakage.

2. Check final drive gear lash as follows:

a. Remove final drive gear case.

b. Place gear case in a vise or other support.

c. Remove one nut from a final drive case stud bolt. Place gear holder (special tool) over ring gear surface and stud bolt. Tighten holder on gear. Tighten holder to stud bolt with nut.

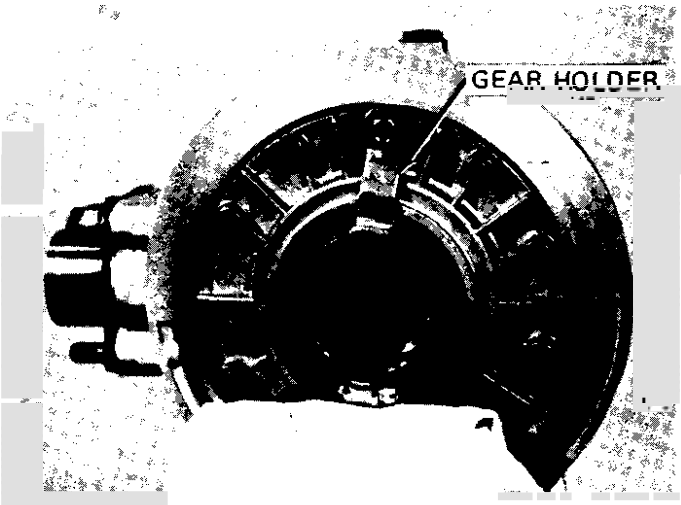

d. Install final gear lash measurement tool on gear coupling (input side).

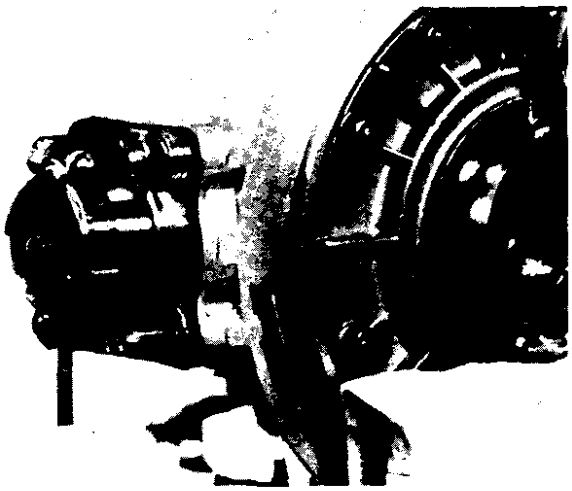

e. Place dial gauge and stand to measuregear lash (movement) asshown. Gear lash is the measurement from gear engagement to gear engagement as the gear coupling is rotated. The measurement point on the tool is 36mm from the surface of the gear coupling.

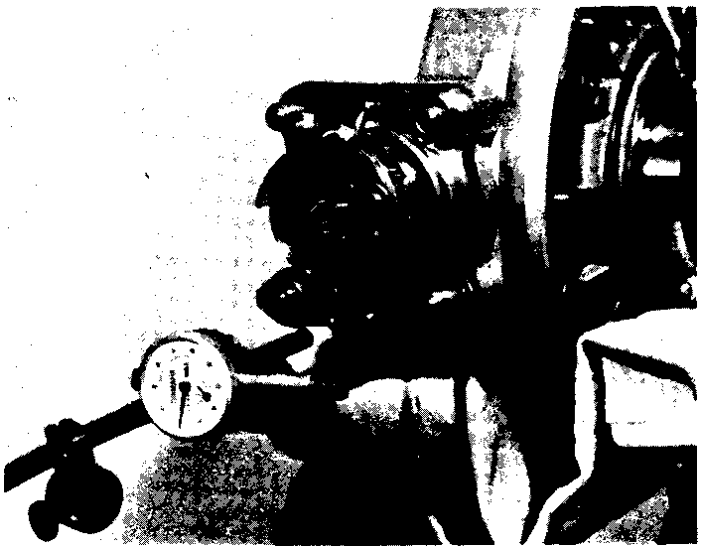

f. Use special wrench to gently rotate gear coupling from engagement to engagement. Note the lash measurement on the dial gauge.

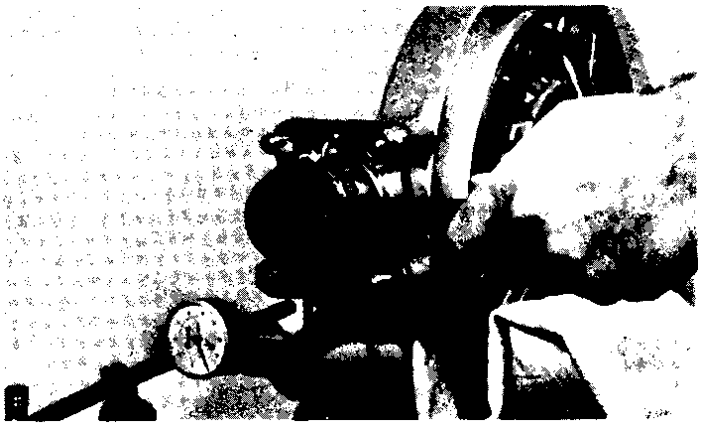

Final gear lash: 0.25~0.50mm (.010~.020 in.)

If lash is not within tolerance, refer to Shaft Drive Section for adjustment and repairpage.

XS750 Power Flow Schematic

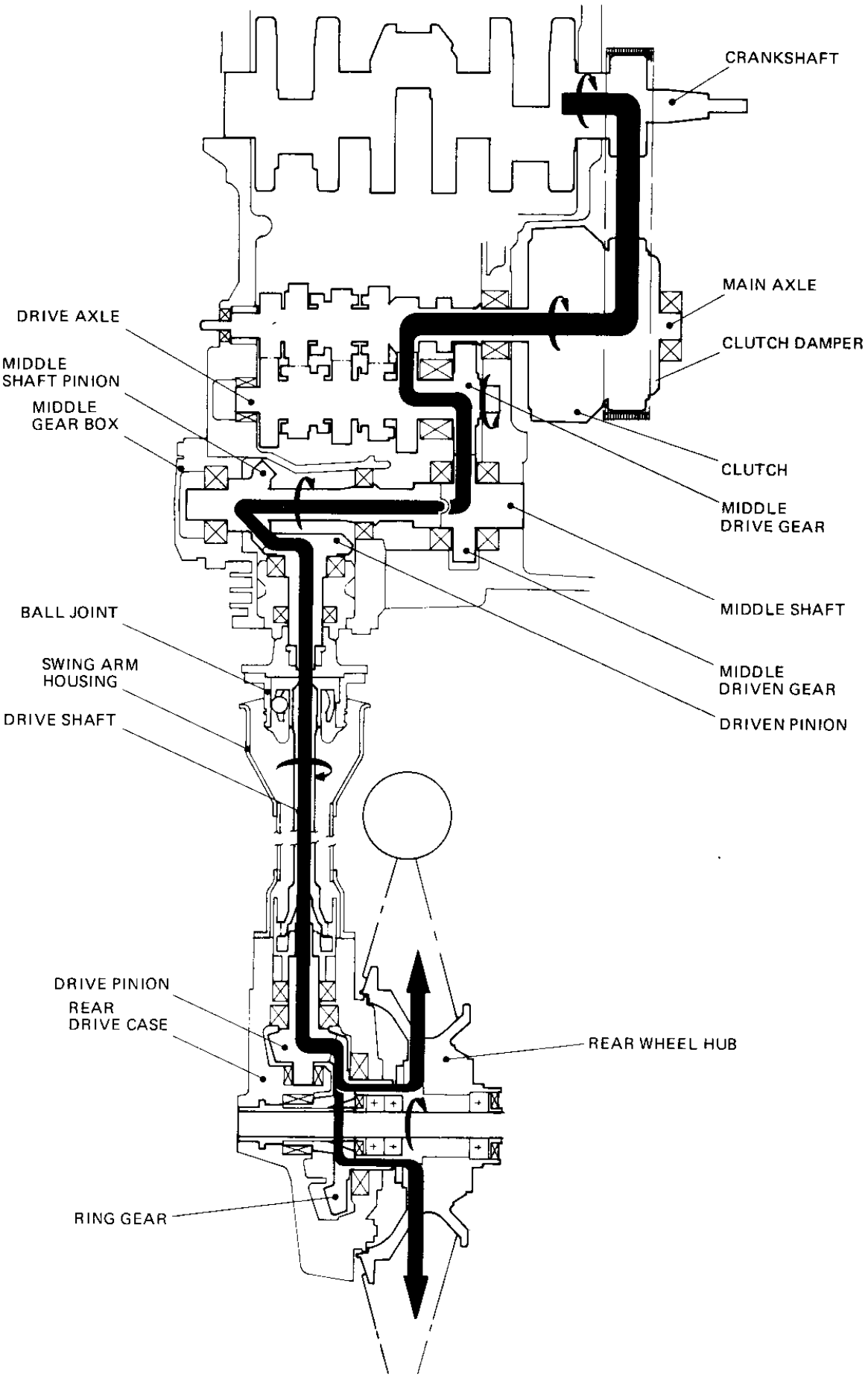

THE BASIC MECHANISM

1-1. An Introduction to the Mechanism

Power is transmitted from the crankshaft through the clutch and two transmission shafts to a third shaft, called the middle driven gear. A splined drive cam fits inside the middle driven gear and transmits power to the driven cam, which is located on the middle gear shaft. The drive and driven cams act as a shock damper in the drive line. These cams remain in the same position relative to each other; that is, they do not "ratchet" or slip over when under heavy load. The middle gear case contains two geared shafts; the drive pinion (shaft and gear) and the driven pinion (gear). A flange rides on the driven pinion spline and is bolted to the ball joint. The ball joint acts like the universal joints in an automobile drive shaft. The ball joint is permanently lubricated and rarely requires replacement. The swing arm (rear arm) serves as both a suspension component and a housing for the drive shaft. Power is transmitted through the ball joint to the drive shaft, and to the splined gear coupling in the final gear case. In the Final Gear Case, the power is transmitted to the Drive Pinion, through the Ring Gear, and finally to the rear wheel.

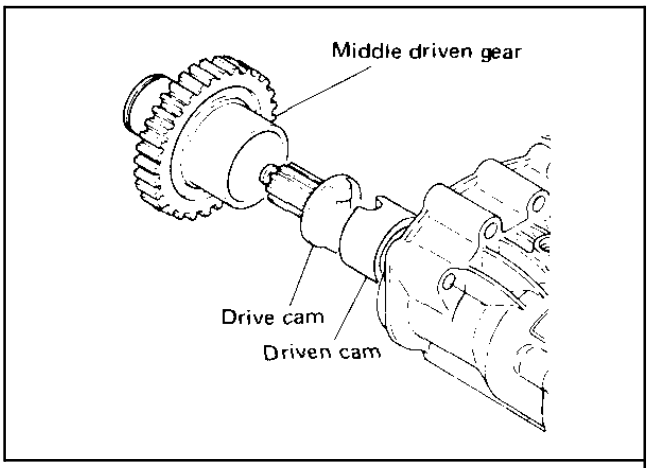

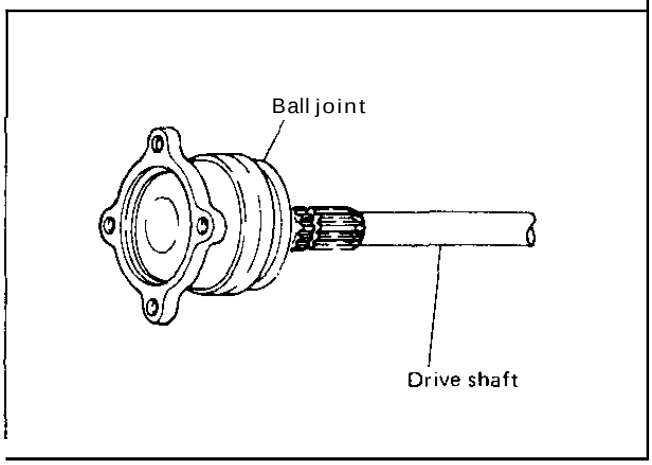

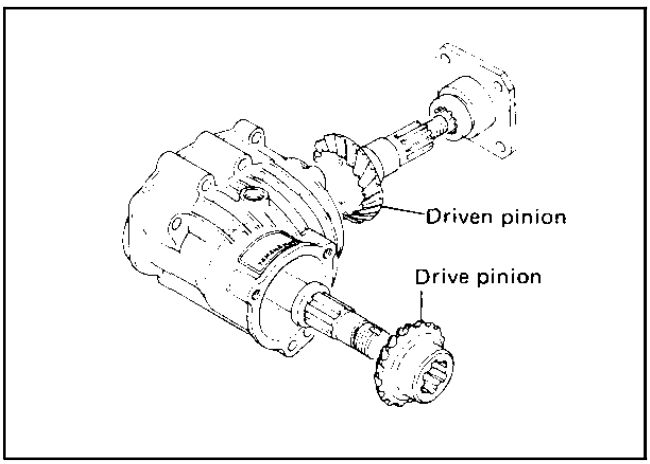

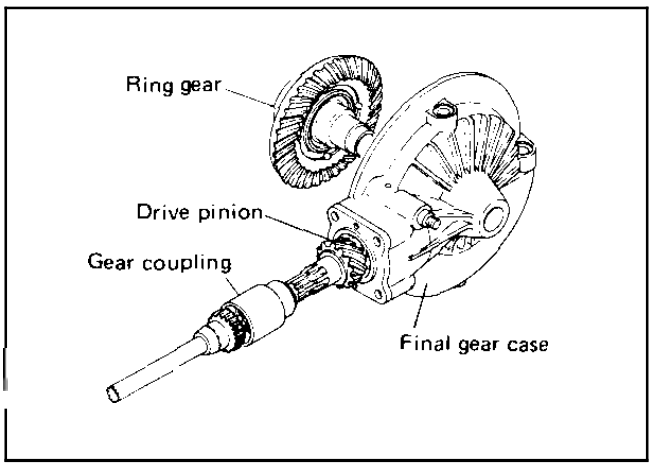

NOTE:

The following illustrations represent only selected components and not the actual complete assembly.

The main service concerns of the Middle Gear Case assembly are:

(1) Gear Lash: The play between the gear teeth. This can be adjusted by shimming.

(2) Tooth Patterns: The locations and terns of contact that are made on the gear teeth. This can be adjusted by shimming.

(3) Bearing Clearance: The distance between a bearing and its bearing housing cap. This is an extremely small clearance that must be carefully adjusted by shimming.

(4) Bearing Preload: The set load forcing tapered roller bearings against their races. In this case **it** is measured as the torsional resistance of the driven pinion bearings. It is usually adjusted by replacing the Expansion Spacer and very carefully adjusting the torque on the special nut.

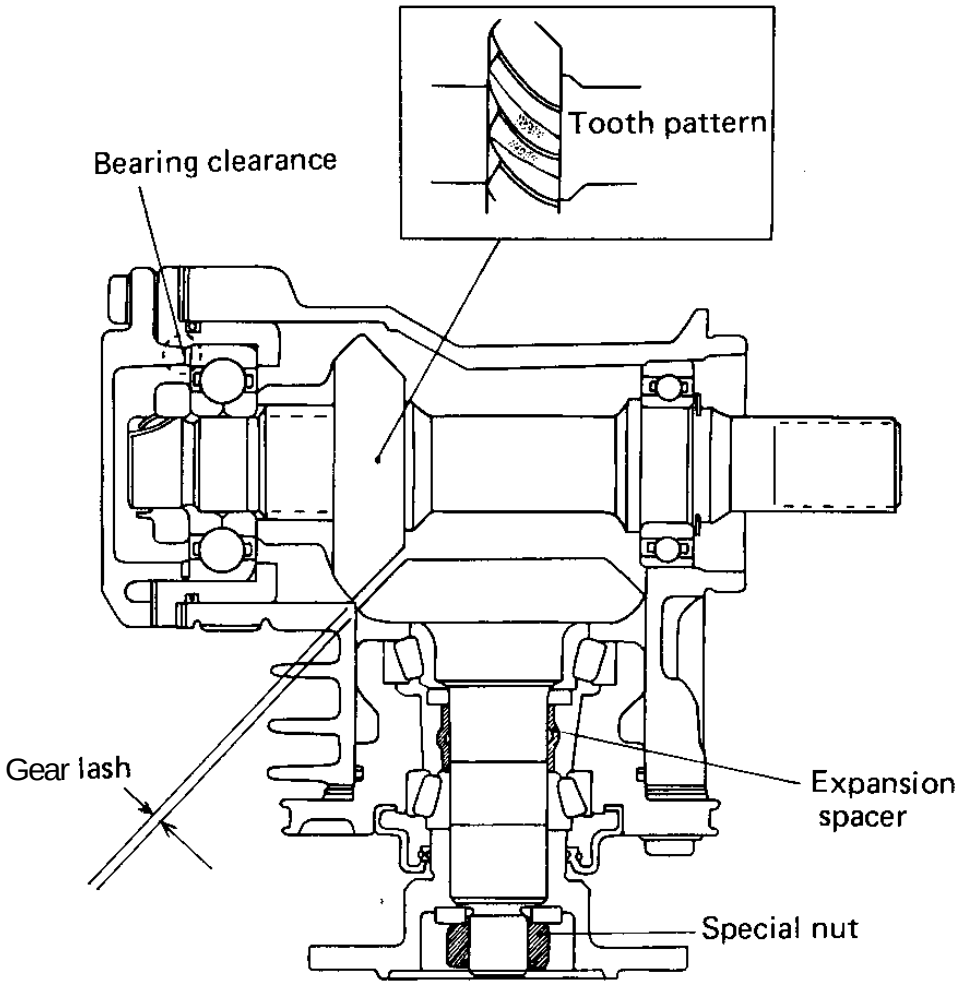

1-2. Lubrication

The maintenance of proper lubrication is the most important consideration that can be given to the shaft drive system by the owner or service person. Almost any significant wear or failure can usually be traced to low lubricant level, contaminated lubricant, or the wrong choice of gear oil. See Chapter **3** for specific gear oil recommendations and checking procedures.

1-3. Identification

Some component assemblies, such as the Middle Gear Case assembly, may contain components of more than one type. These different types will be identified in the text as Type 1 or Type 2. Precise serial number identification of applicable machines is not available.

		Identifying Feature
Middle Gear Case	Type 1	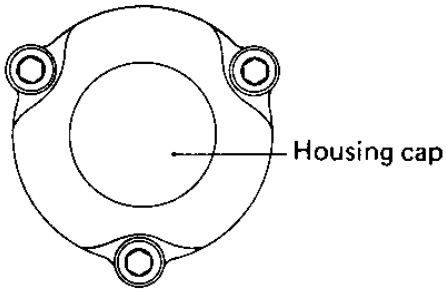
	Type 2	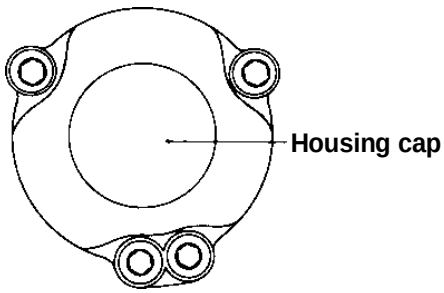
Final Gear Case	Type 1	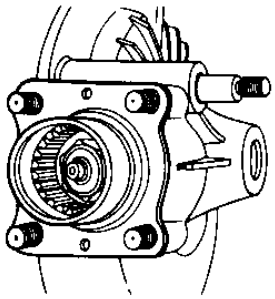
	Type 2	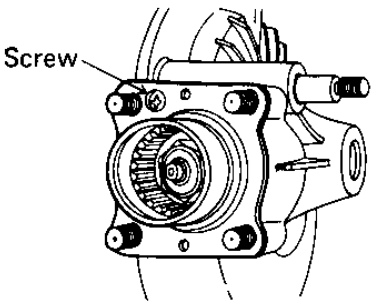

The application of parts of the individual types will be discussed in the appropriate section of this manual.

NOTE:

Type 1 Final Gear ..... See Type 1 preload specification (spacer type)

Type 2 Final Gear ..... See Type 2 preload specification (expansion spacer type)

SPECIAL TOOLS

The following special tools are necessary for complete servicing of shaft drive components.

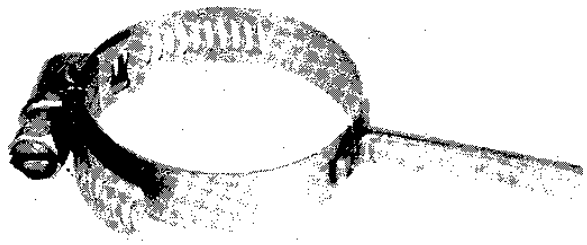

Gear lash measurement tool (final gear)
P.No.90890-01231

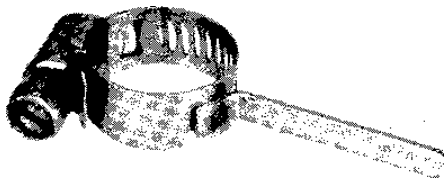

Gear lash measurement tool (middle gear)
P.No.90890-01230

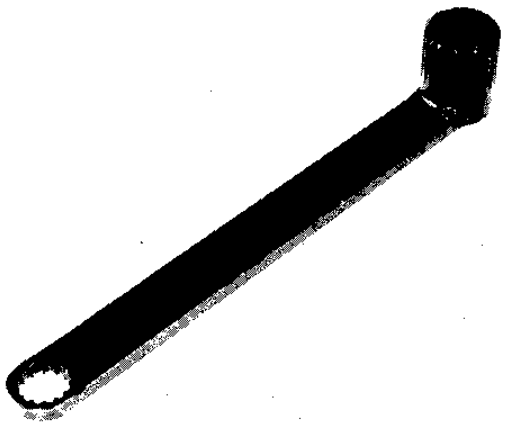

Middle and final gear holding tool
P.No.90890-01229

Ring gear holding tool
P.No.90890-01254

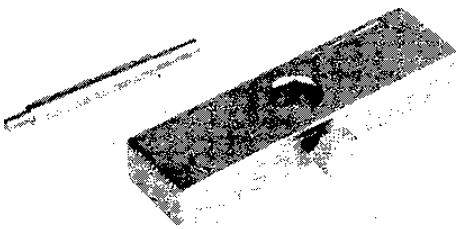

Dial **gauge stand**
P.No.90890-01232

Torque wrench (0 – 30 cm-kg)
P.No.90890-05147

In addition to these tools and common hand tools, the following are required:

1-ton press
Universal bearing puller
Feeler gauges
Loctite or similar thread sealant
Contact pattern paint (See Section **6–2)**
Bearing installation collars
Torque wrench 0 ~10 m-kg (0~70 ft-lbs)
Dial gauge

The following special tools are not available but can be constructed for shaft drive component disassembly and assembly:

Press Tool No. 1 For final gear guide coller removal (see page126)

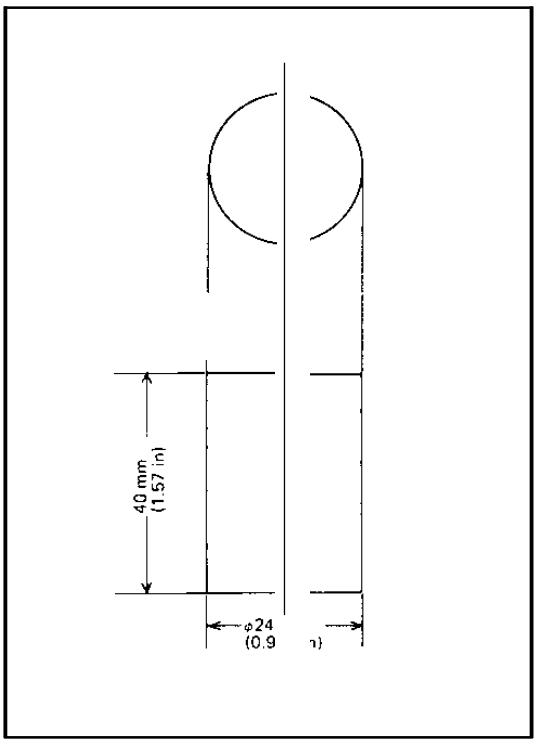

Press Tool No. 2 For final gear roller bearing and oil seal installation (see page)

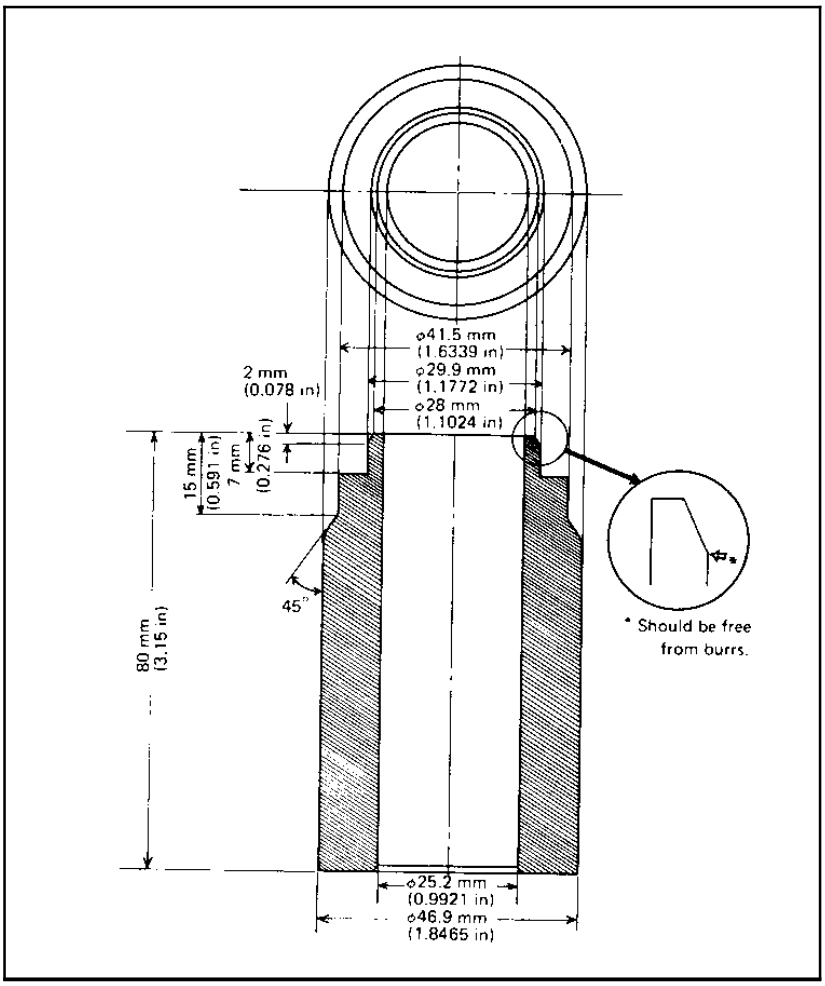

Final Gear Stand

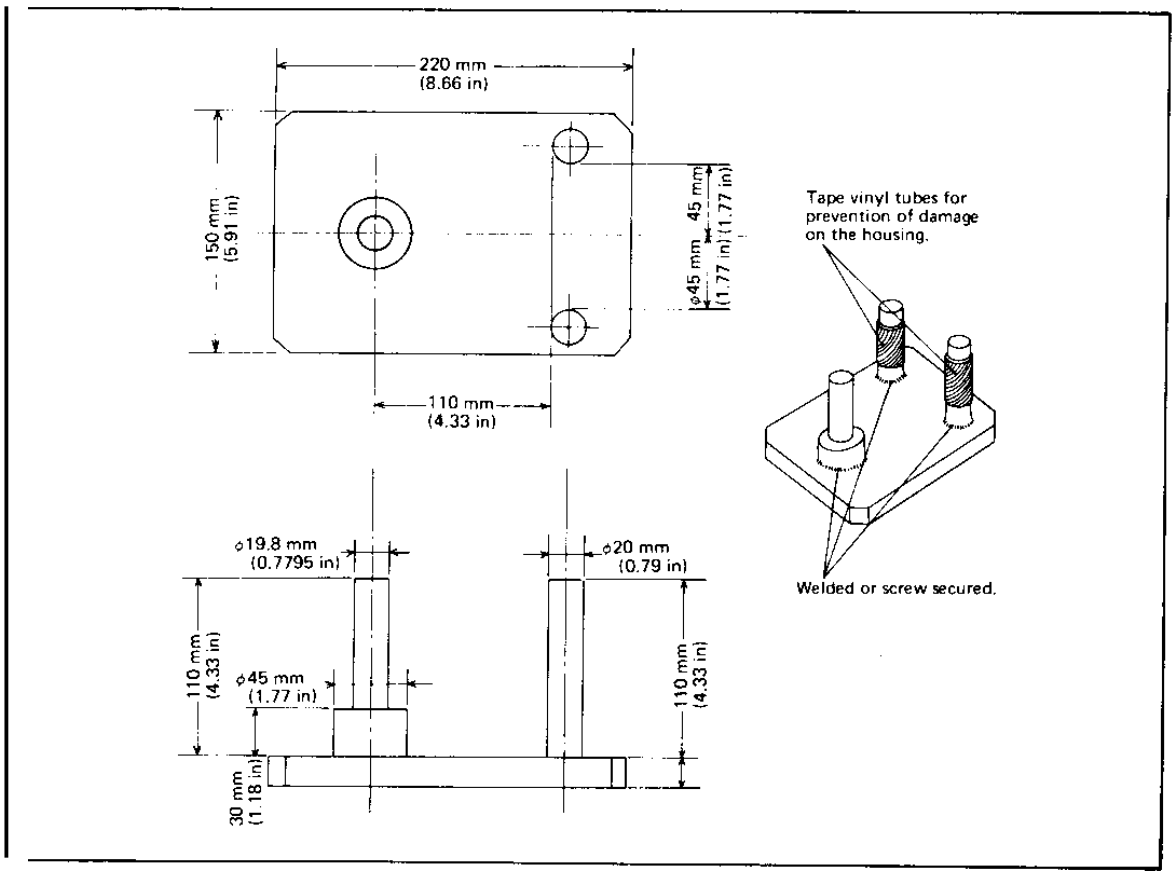

3-1. GEAR OIL TYPE AND QUANTITY

Middle Gear Oil Capacity: 375 cc
(13.0 U.S. fluid oz)
Final Gear Oil Capacity: 300 cc
(10.0 U.S. fluid oz)

Recommended oil:

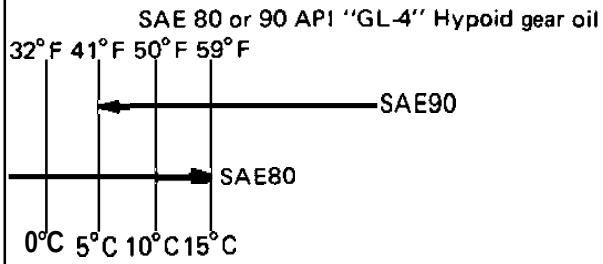

If desired, an SAE 8OW/90 hypoid gear oil may be used for all conditions.

NOTE:
"GL-4" is a gear oil quality and additive rating. "GL-5" or "GL-6" designated gear oils of the proper weight may also be used.

Lubrication Intervals
Initial Gear Oil Change:
400 km (250 mi)
Routine Gear Oil Change:
every 9,600 km (6,000 mi)

NOTE:
Middle gear and final gear oil can be checked with same level gauge, which is in the owners tool kit.

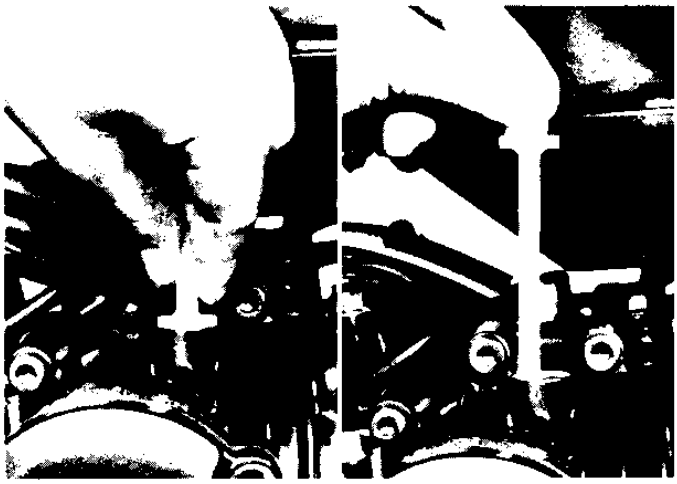

3-2. OIL LEVEL MEASUREMENT

A. Place the machine on a level surface and place it on the center stand. The engine should be cool (at atmospheric temperature). Allow 2 minutes for oil to drain to bottom of cases.

B. Remove the oil filler cap. Check the oil level with level gauge (from tool kit) as shown. The correct oil level is between the two marks on each end of the level gauge. Use end of gauge marked "REAR" for measuring the rear (final) gear case. Use the end marked "MIDDLE" for measuring the middle gear case.

CAUTION:
Take care not to allow foreign material to enter the middle and/or final gear case.

3-3. GEAR OIL REPLACEMENT

NOTE:

See Chapter 4 regarding the inspection of drained oil. page 110

A. Place an oil pan under the transmission for the middle gear and under the final gear case.

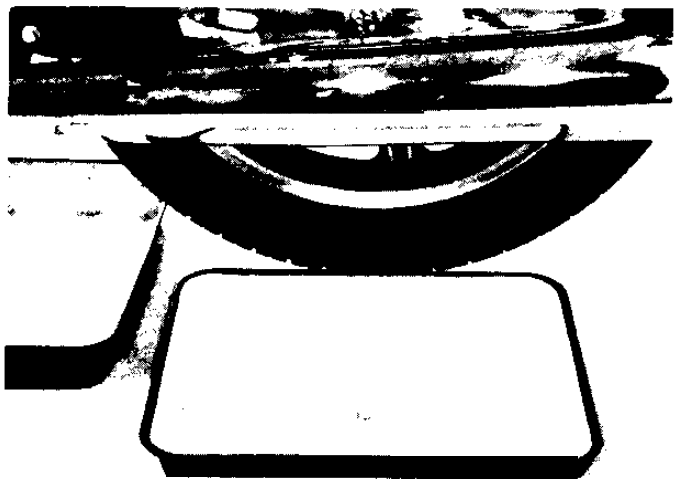

B. Remove the middle and/or final gear oil filler cap(s) and the drain plug(s), and drain the oil.

WARNING:
When draining or filling, take care not to allow foreign material to enter the middle and/or final gear case. Do not allow the gear oil to contact the tire and wheel.

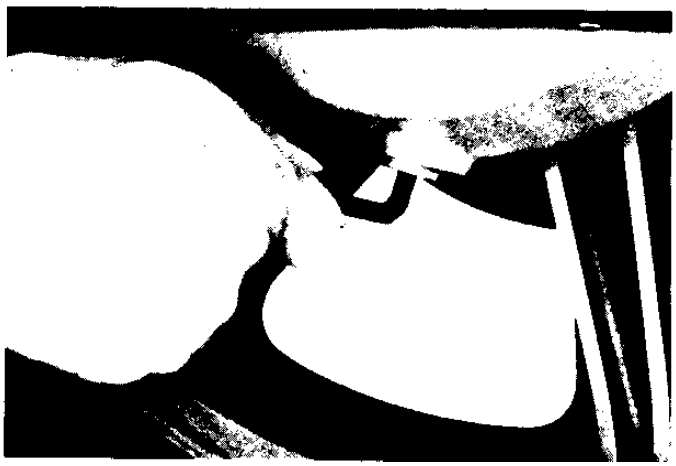

C. Reinstall the middle and/or final drain plug(s).

MIDDLE GEAR DRAIN BOLTTORQUE:	4.3 m-kg (31 ft-lb)
FINAL GEAR DRAIN BOLT TORQUE:	2.3 m-kg (17 ft-lb)

D. Fill the gear case(s) up to specified level.

Oil Capacity:	
Middle Gear Case:	375 cc (13.0 U.S. fl. oz)
Final Gear Case:	300 cc (10.0 U.S. fl.
Recommended oil:	(See page 9)

E. Reinstall the filler cap(s) securely.

NOTE:

After initial 400 km (250 mi) oil change, it is normally not necessary to change middle and final gear oil more frequently than the indicated service interval of 9,600 km (6,000 mi).

TROUBLESHOOTING

4-1. TROUBLESHOOTING CONDITIONS

Basic conditions	Possible damaged areas
1. A pronounced hesitation or "jerky" movement during acceleration, decelera tion, or sustained speed. (This must not be confused with engine surging or transmission characteries). 2. A "rolling rumble" noticeabte at low speed; a high-pitched whine; a "clunk" from a shaft drive component or area.	A. Damage to bearings. B. Improper gear lash; improper gear tooth contact. C. Gear tooth damage. D. Drive flange/ball joint bolts loose.
3. A locked-up condition of the shaft drive mechanism; no power transmitted from engine to rear wheel.	E. Broken drive shaft. F. Disconnected flange/ball joint connection. G. Driven cam seized to middle gear drive pinion shaft. H. Broken gear teeth. I. Seizure due to lack of lubrication. J. Small foreign object lodged between moving parts.

NOTE:

Damage areas A, B and C above may be extremely difficult to diagnose. The symptoms are quite subtle and difficult to distinguish from normal machine operating noise. If there is reason to believe component (s) are damaged, remove component(s) for specific inspection.

B. Consider the following

Inspection Notes:

(1) During coasting, accelerating or decelerating, the "rolling rumble" will increase with rear wheel speed, not engine or transmission gear speeds. However, such noise may also be due to wheel bearings.

(2) Noise that varies with acceleration and deceleration: Following incorrect reassembly, a condition of too-little gear lash may produce a whine during deceleration.

> **CAUTION:**
> **Too-little gear lash is extremely destructive to gear teeth. If a test ride following reassembly indicates this condition, stop riding immediately to minimize damage to gears.**

(3) A slight "thunk" must be distinguished from normal machine operation. It will be most noticeable at low speed and could indicate broken gear teeth.

> **WARNING:**
> **If broken gear teeth are suspected, stop riding immediately. This condition could lead to locking-up of the shaft drive assembly and result in harm to a rider.**

(4) If the drive flange/ball joint bolts are slightly loose, a "clunk" may be felt when slowly taking off, or when changing from slow acceleration to slow deceleration. At high speed this will result in vibration.

> **WARNING:**
> **Do not continue riding a machine suspected of having loose flange/ball joint bolts. The components may break, causing injury to a rider.**

C. Troubleshooting Chart

Where Basic Conditions (1) and (2) above exist, consider the following Chart:

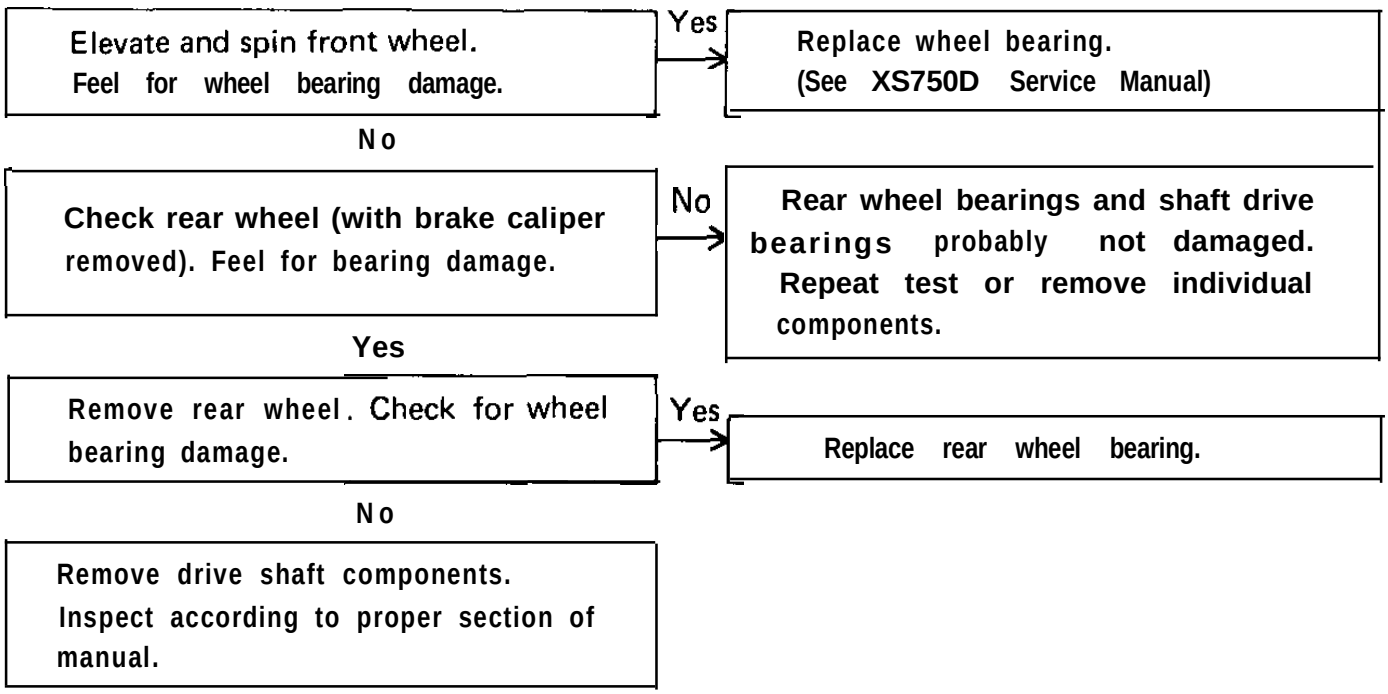

D. Oil Leak Inspection

If a shaft drive component is suspected of leaking oil, first thoroughly clean the entire machine. The apparent location of an oil leak on a dusty machine may be misleading. Dry the machine and apply a leak-localizing compound or a dry-powder spray deodorant that will limit the flow of any leaking oil. Operate the machine prepared in this way for the distance necessary to percisely locate the leak. There are the possibilities that a component housing may have been damaged by road debris or an accident, or a gasket or seal may be cracked or broken. However, on new or nearly new machines an apparent oil leak may be the result of a rust-preventive coating or excess assembly lubrication of seals. Always clean the machine and recheck the suspected location of any apparent leakage.

Oil Seals and Gaskets

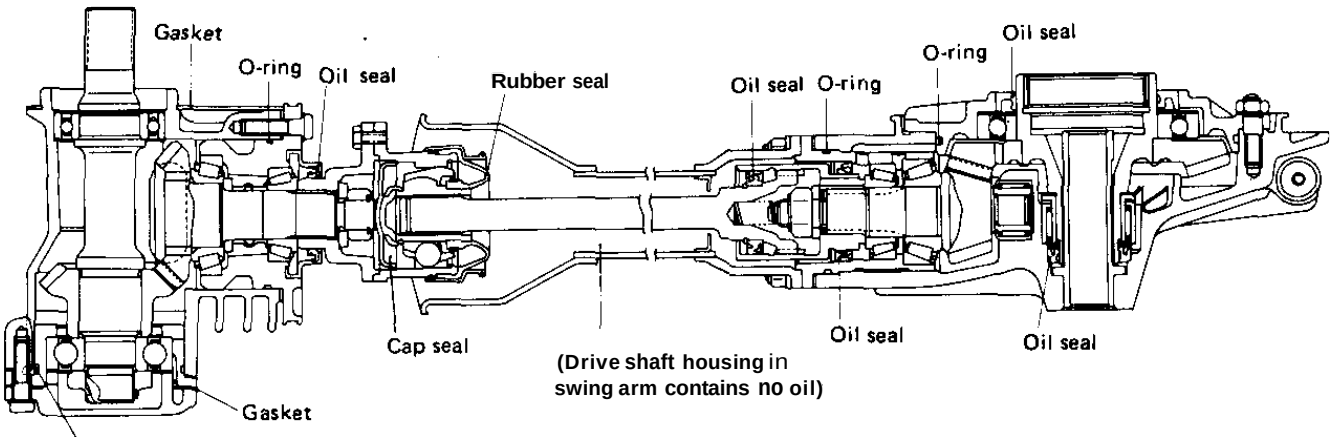

E. Checking Drained Oil

Whenever a problem is suspected in either the middle or final gear assemblies, drain and inspect the oil. Metal particles on the drain plug or in the oil could indicate a bearing seizure or other problem in the component. However, a small amount of metal particles in the oil is normal.

REMOVAL OF COMPONENTS

5-1. Removal of Components

It is normally not necessary to remove the engine to remove the Middle Gear Case.

A. Drive Shaft Joint

(1) Pull rubber boot from drive shaft coupling to expose four **(4)** bolts.

(2) Remove **4** coupling bolts;

NOTE:

Use the rear brake to **lock** the drive shaft.

B. Final Gear Removal

(1) Remove rear axle and left shock absorber. Remove rear wheel. See XS750D Service Manual for procedures.

(2) Remove 4 nuts holding Final Drive unit to swing arm.

NOTE:

Keep the Final Drive pinion bearing housing attached to the Final Drive assembly. It may tend to separate from the Final Gear (for Type 1 Final Gear only).

(3) Remove the Final Drive Gear assembly.

C. Middle Gear Removal

Remove seven (7) middle gear case securing bolts, Remove the meddle gear case, drive cam and spring.

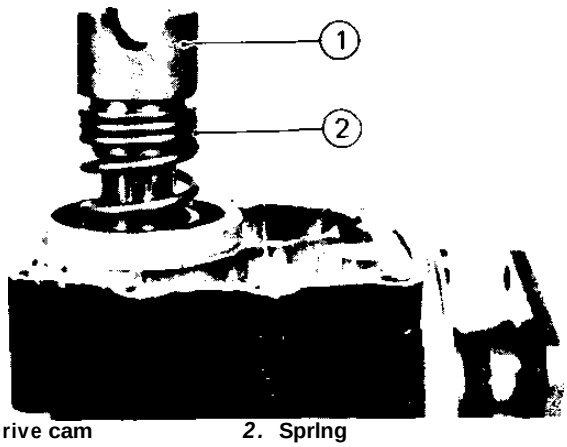

1. Drive cam 2. Sprlng

D. Drive Shaft

Remove drive shaft as shown.

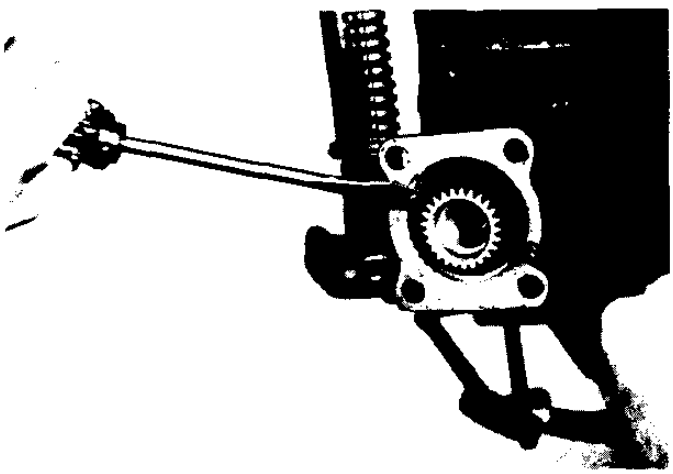

5-2. Checking Gear Lash

A. Check final drive gear lash as follows

(1) Remove final drive gear case.

(2) Temporarily secure bearing housing as follows (Type 1 and Type 2):
Place a thickness of washer (about 1/4 inch thick) over 2 opposite bearing housing studs. Install 2 nuts on these studs and temporarily tighten the bearing housing to the final drive housing.

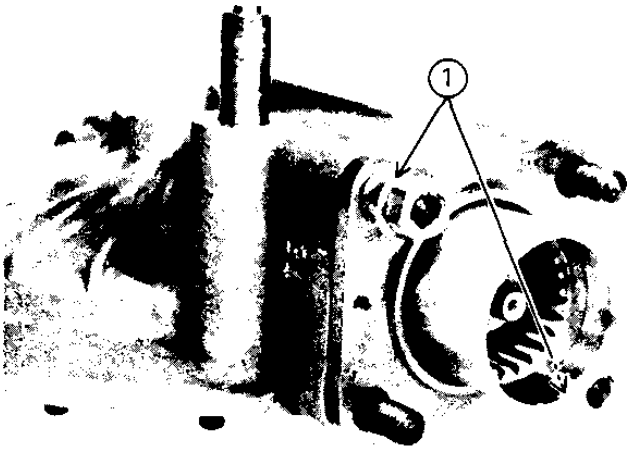

1. Washers

(3) Place gear case in a vice or other support.

(4) Remove one nut from a final drive case stud bolt. Place gear holder (Special Tool) over ring gear surface and stud bolt. Tighten holder to stud bolt with nut.

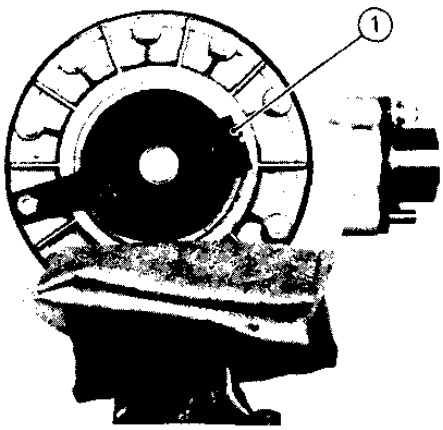

1. Ring gear holding tool

(5) Install final gear lash measurement tool on gear coupling (input side).

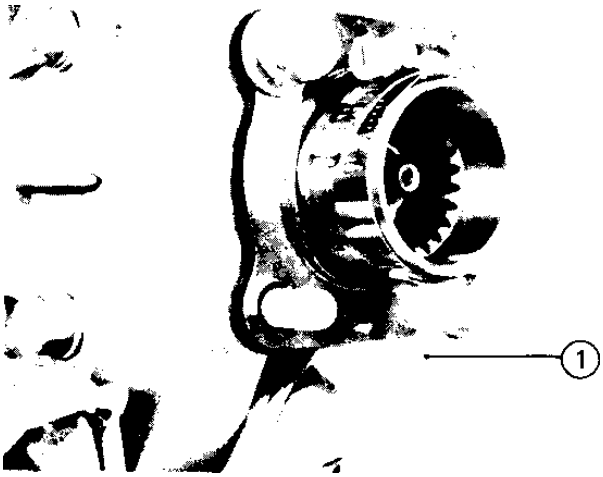

1. Gear lash measurement tool

(6) Mount a dial gauge against the lash measurement tool at the scribed mark (60 mm (2.36 in) from the center of the shaft).

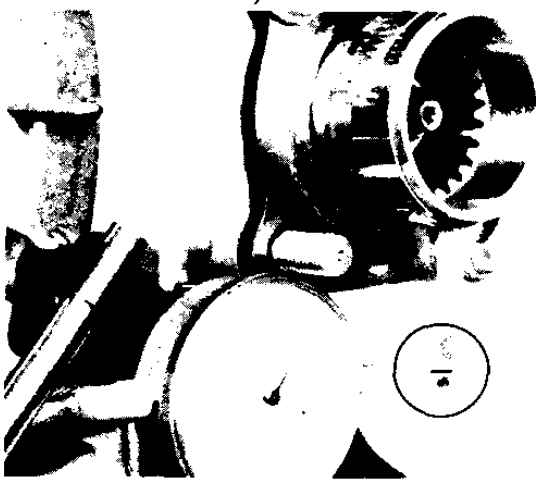

(7) **Use** special wrench to gently rotate gear coupling back and forth. Note the lash measurement on the dial gauge.

FINAL GEAR LASH
0.25 – 0.50 mm (0.010 – 0.020 in): When using the measurment tool.
0.1 – 0.2 mm (0.004–0.008 in): Actual gear lash on the final gear teeth.

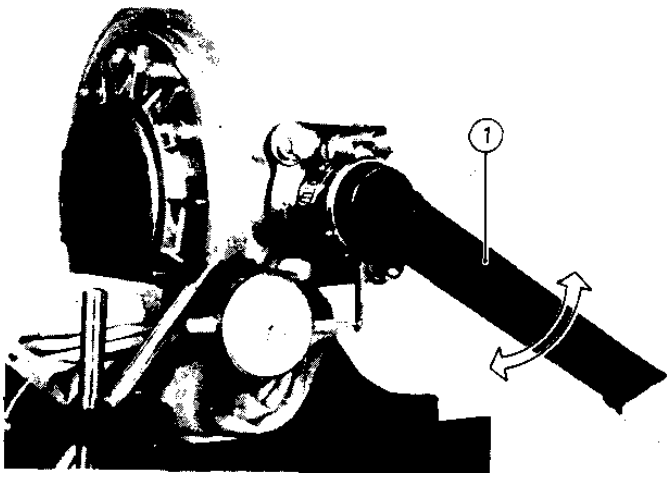

1. Middle and final gear holding

(8) Check this engagement at **4** positions. Rotate the shaft 90° each time and repeat the gear lash check.

B. Check middle gear lash as follows

(1) Support gear case in a vise by the out. put shaft flange. Install the lash measurement tool on the input shaft as shown.

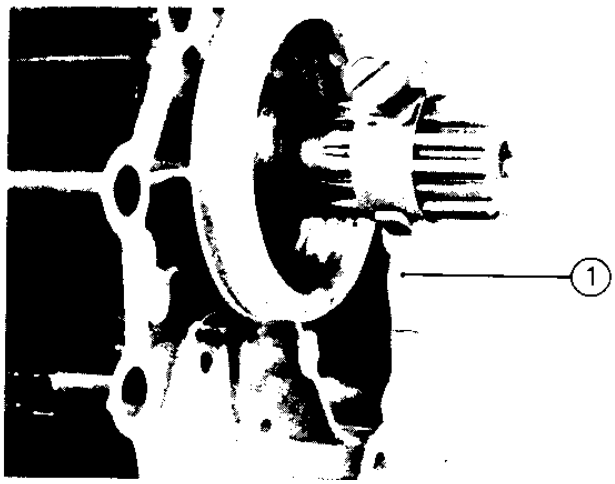

1. Gear lash **measurement tool**

(2) Mount a dial gauge against the lash measurement tool at the scribed mark **(34** mm **(1.34** in) from the center of the shaft).

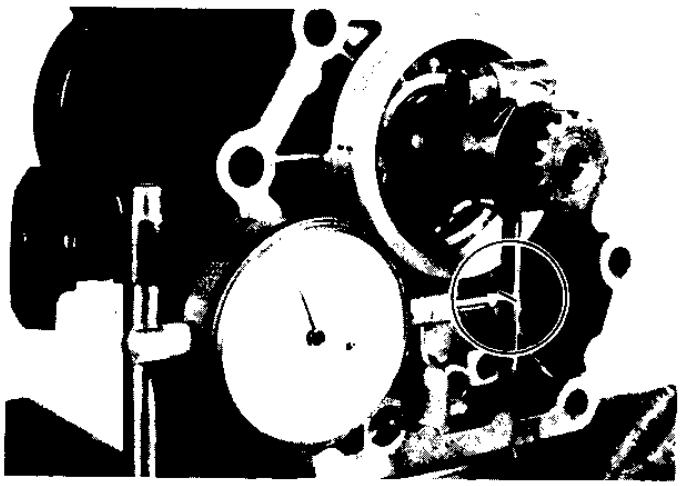

Hold the gear case and rotate the input shaft back and forth using the special wrench. Read the gear lash on the dial gauge.

MIDDLE GEAR CASE LASH
0.1 – 0.2 (0.004 – 0.008 in):
Measured value and actual gear lash are the same.

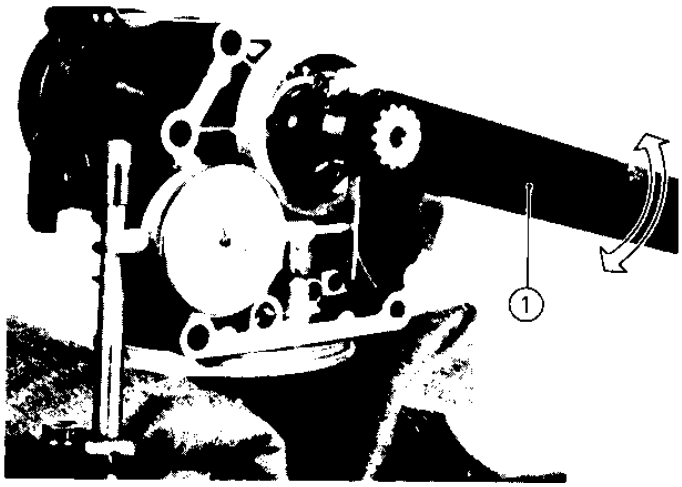

1. Middle and final gear holding tool

(4) Check this engagement at **4** positions. Rotate the driven pinion shaft 90° each time and repeat the gear lash check.

MIDDLE GEAR

6-1. Disassembly and Inspection

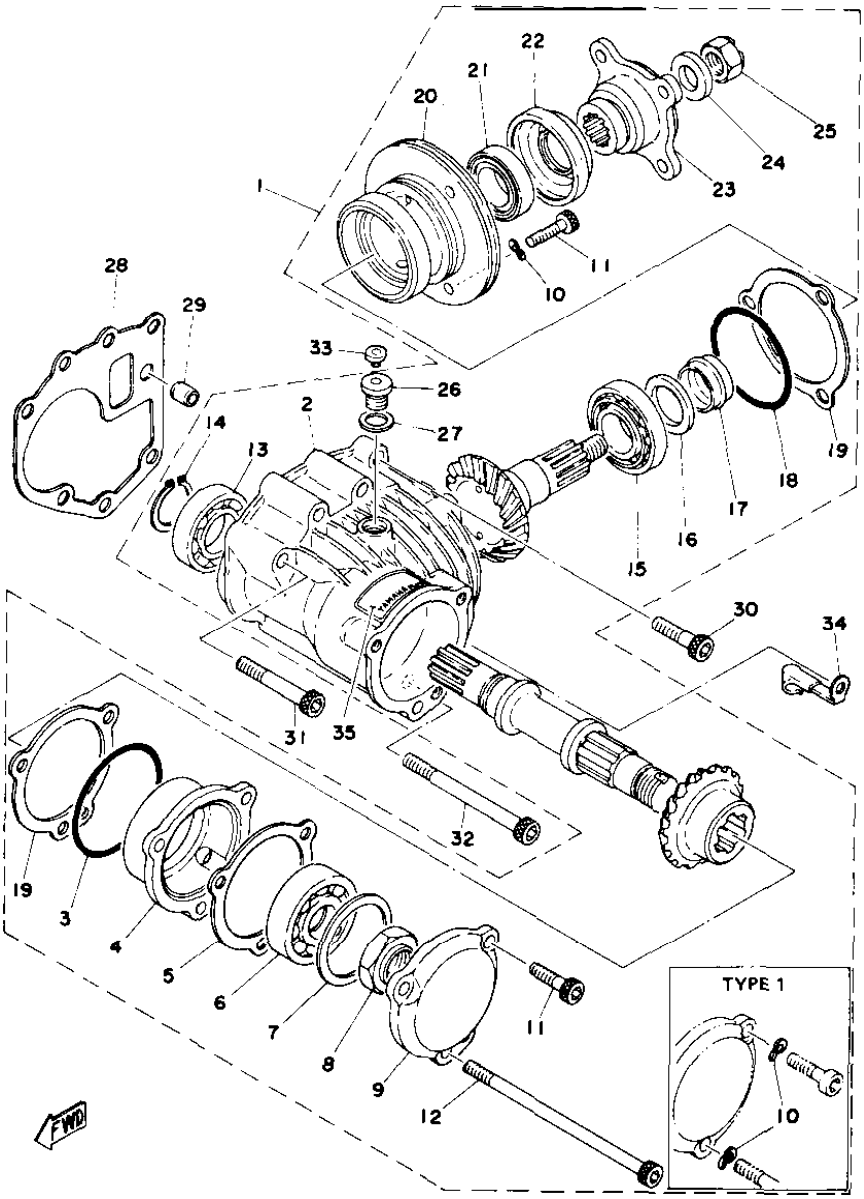

1. Middle gear case ass'y
2. Middle gear housing
3. "O". ring
4. Bearing housing
5. Housing cap gasket
6. Bearing (6305 special)
7. Thrust shim (0.15, 0.3, 0.4, 0.5 mm)
8. Nut
9. Housing cap
10. Wave washer
11. Hexagon socket head bolt
12. Hexagon socket head bolt
13. Bearing (6006C3)
14. Circlip (S-30)
15. Tapered roller bearing
16. Plate washer (25.4-37-6)
17. Expansion spacer
18. "O" ring
19. Pinion shim (0.10, 0.15, 0.30)
20. Bearing housing
21. Tapered roller bearing
22. Oil seal (S-35-63-16.5)
23. Middle gear flange
24. Plate washer (14.1-32-5)
25. Self locking nut
26. Oil inlet plug
27. Gasket
28. Middle gear case gasket
29. Dowel pin (6.4-10-15)
30. Hexagon socket head bolt
31. Hexagon socket head bolt
32. Hexagon socket head bolt
33. Plug cap
34. Harness clamp
35. Oil caution label

NOTE:

If either the drive pinion or driven pinion gears are damaged, both must be replaced as a set. Please note also that all bearings that are removed in the following operations must be replaced during reassembly. By removing only the drive pinion it is possible to perform a thorough inspection of the middle gear assembly.

A. Purpose of Drive Pinion Removal

By removing the drive pinion shaft only, the following can be inspected:

(1) Drive Pinion Bearing (page 117 – 118)
(2) Driven Pinion Bearings (page 118 – 119)
(3) Drive Pinion Bearing Housing Cap clearance (page 120)
(4) Condition of gear teeth (page 117)
(5) Tooth contact pattern (page 121)
(6) Driven pinion bearing preload (page 122 –

B. Disassembly (Initial)

(1) Remove bearing housing cap.

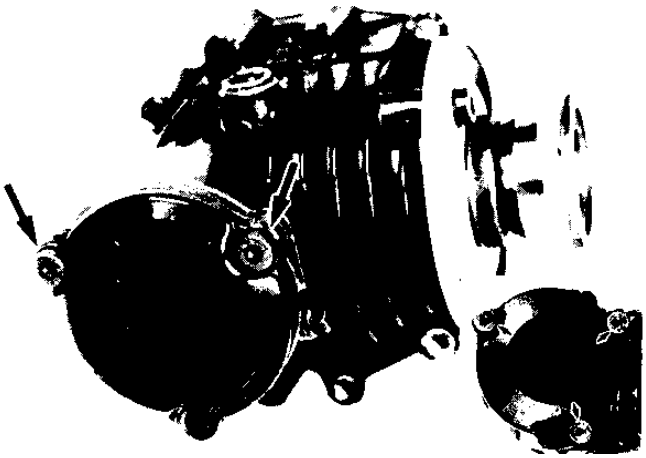

(2) Remove drive pinion circlip.

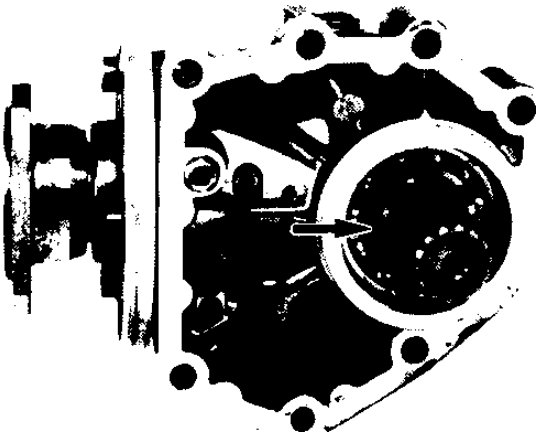

(3) Tap on splined end of drive pinion shaft with a soft hammer. Remove the drive pinion assembly.

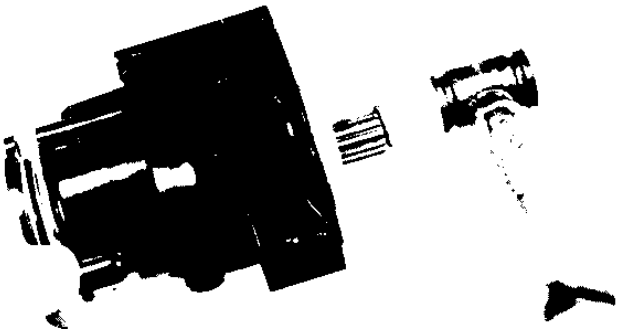

C. Drive Pinion Assembly Inspection

Check bearing movement for damage to balls, rough spots, bearing looseness. Inspect gear teeth. If any gear tooth is damaged, the gear set must be replaced.

D. Driven Pinion Assembly Inspection

Leave driven pinion installed. Spin the shaft to check for bearing damage. Inspect gear teeth.

E. Drive Pinion Bearing Removal (for replacement only)

Bend down locking collar of the nut.

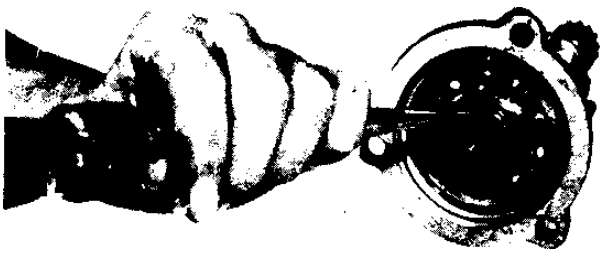

(2) Use special tool to hold splined end of shaft and remove the nut.

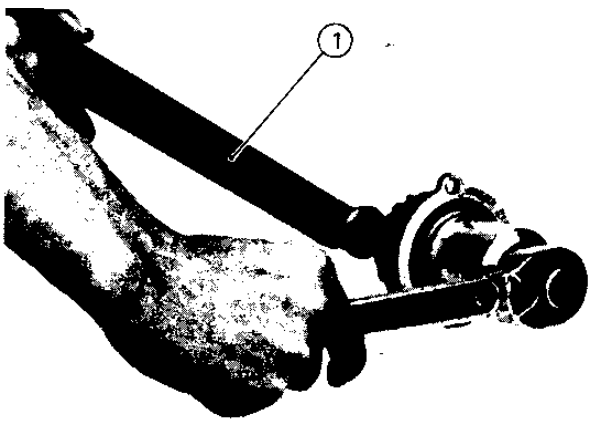

1. Middle and final gear holdint tool

(3) Remove housing with bearing. Remove bearing from case.

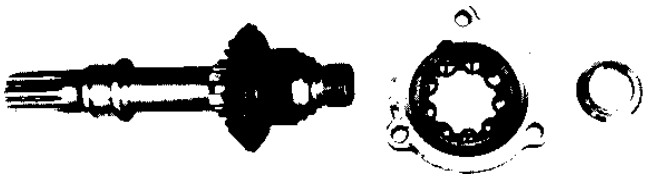

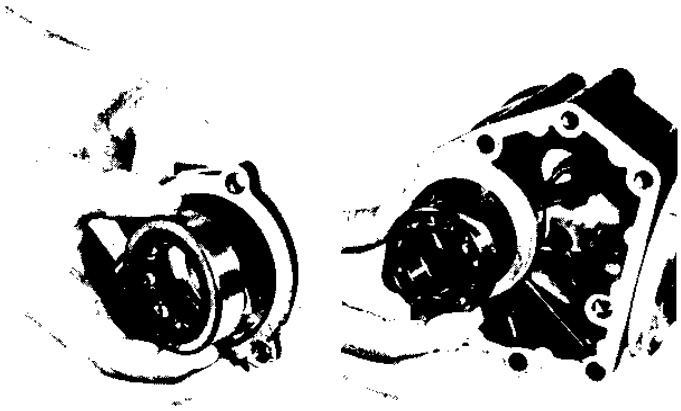

F. Driven Pinion Disassembly (for replacement only)

NOTE:

The following driven pinion disassembly should be performed only if the bearings are to be replaced. Do not re-use bearings or races that have been installed and removed.

(1) Remove bearing housing screws. Remove bearing housing from case.

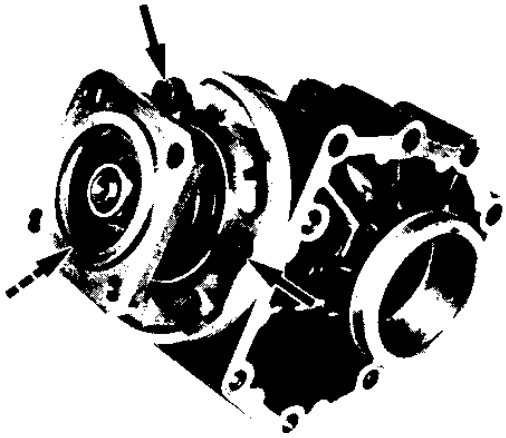

(2) Hold flange in a vise. Remove self-locking nut.

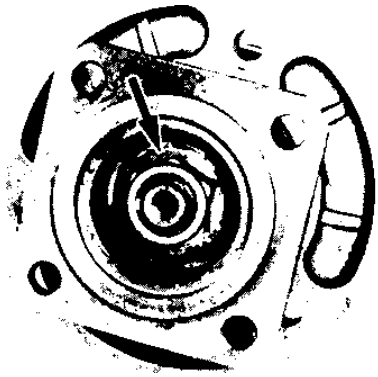

(3) Tap driven pinion with a soft hammer. Remove pinion from bearing housing.

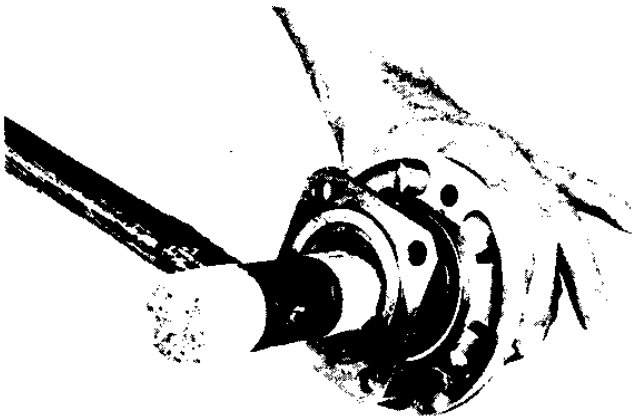

(4) Small bearing (rear):

Remove bearing housing oil seal and bearing inner race.

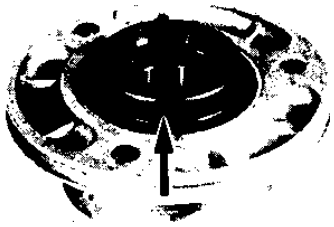

(5) Bearing housing outer race removal requires an oven. Heat bearing housing to 100°C (212°F). If necessary, tap the races out with a punch.

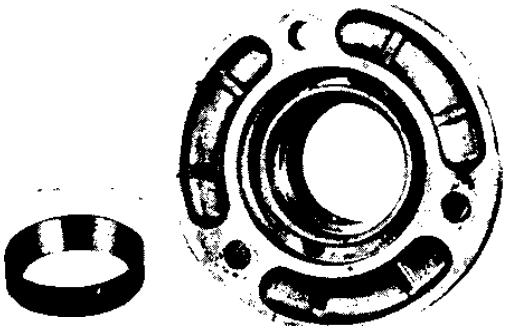

(6) Large bearing (front):
Use a universal-type bearing puller to remove the bearing from the driven pinion.

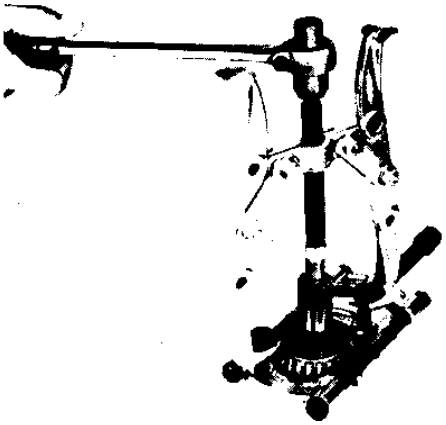

6-2. Reassembly and Adjustment

A. Drive Pinion Assembly

(1) Install bearing into middle gear case.
(2) Install bearing into bearing housing.
(3) Install bearing inner race half onto drive pinion shaft.

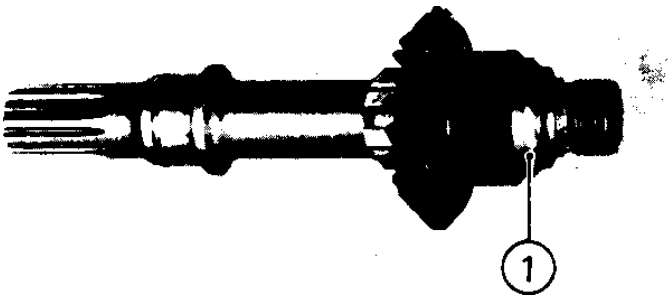

(4) Install bearing housing onto drive pinion. Install remaining bearing inner race half.

(5) Use middle gear holding tool to lock drive pinion shaft and install nut. Tighten to specified torque.

Drive Pinion Nut Torque:
11 m-kg (80 ft.lb)

(6) Stake the locking collar of the nut to the slot on the drive pinion shaft.

(7) Install a new o-ring on the bearing housing.

(8) Install original shim on bearing housing assembly and install drive pinion assembly into middle gear case.

NOTE:
It may be helpful to temporarily install the long mounting screw through the bearing housing and shim.

B. Bearing Housing Cap Clearance

(1) Install the original thrust shim. Install the housing cap without a gasket. The sealing surfaces must be clean to obtain an accurate measurement.

(2) Hold the housing cap in position. Insert a feeler gauge between the cap and the case. If necessary, select an appropriate thrust shim to achieve specified gap.

Cap to housing gap (no gasket):
0.2 – 0.25 mm (0.0079 – 0.0098 in)
New gasket thickness:
0.3 mm (0.012 in)

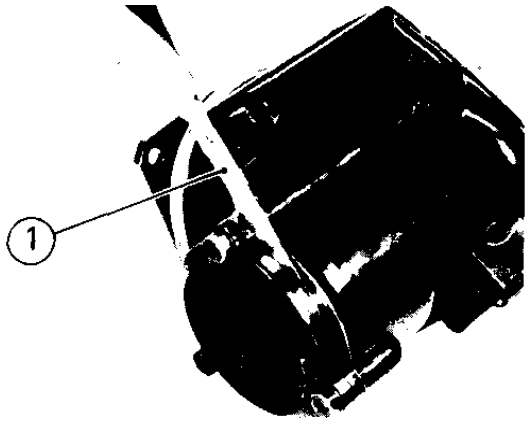

1. Feeler gauge

(3) When gap is adjusted properly, remove cap. Install new housing cap gasket. Reinstall cap and tighten screws to specified torque.

Housing Cap Screw Torque:
2.5 m-kg (18 ft-lb)

C. Gear Lash

(1) Check middle gear lash.
See Section 5 2. Page 114

(2) To reduce gear lash, remove the drive pinion assembly and reduce the thickness of the bearing housing shim-(s). By combining available shims it is possible to decrease total shim thickness in 0.05 mm steps.

Location of Shims for Adjusting Gear Lash and Tooth Contact Pattern

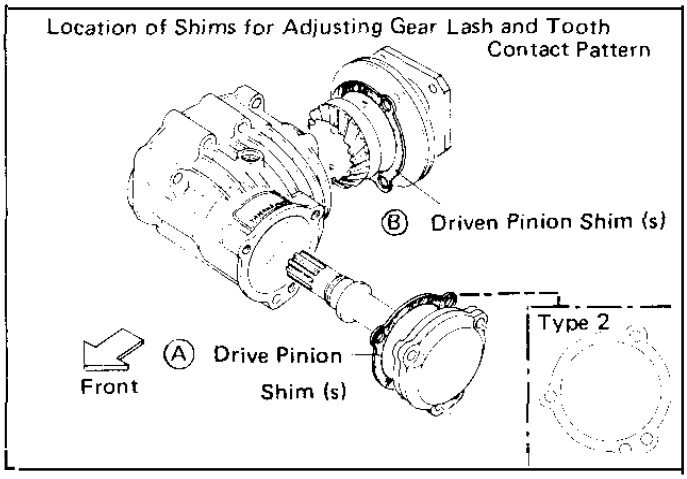

Available Shims (mm):
0.10, 0.15, 0.30

To increase gear lash, use a thicker shim. Gear lash can also be adjusted by changing the driven pinion bearing housing shim(s) in the same way.

CAUTION:
Too little gear lash is extremely destructive to gears. Always recheck an assembled component for specified gear lash.

D. Tooth Pattern Inspection and Adjustment

(1) The middle gear case must be relatively free of oil, with only enough to protect the bearings. Clean the gear teeth with spray solvent.

(2) To mark the gears, use a white paint. White lead or artist's oil zinc white may be used. The paint must be smooth and firm, with the consistency of toothpaste. Apply this paint to 3 or 4 driven pinion teeth. Cover the contact faces of the teeth.

(3) Use the middle gear holding tool to turn the pinion shaft while holding the driven pinion flange to simulate a load. Turn for 2 or 3 revolutions. Then reverse the rotation and load for 2 or 3 revolutions.

(4) Remove the bearing housing cap and tap out the drive pinion shaft. Inspect the gear tooth patterns.

Example 1. Correct pattern

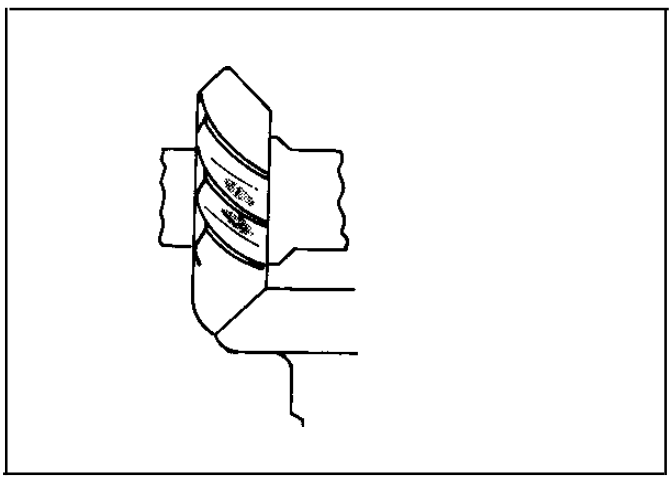

NOTE:
The pattern should be centered in the tooth drive surface. However, wear and drive forces tend to move the contact area to the out side. Therefore the correct pattern can be slightly toward the inside, or heel, of the gear tooth.

(5) To correct an incorrect tooth pattern, change the total shim thickness at each location (A and B) an equal amount. The shims must be changed an equal amount or gear lash will be affected. Use the following guide:

Example 2. Incorrect pattern

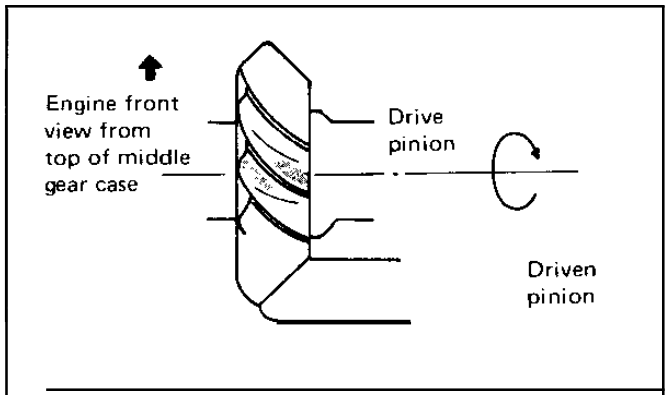

Decrease shim thickness at A increase shim thickness at B an equal amount.

Example 3. Incorrect pattern

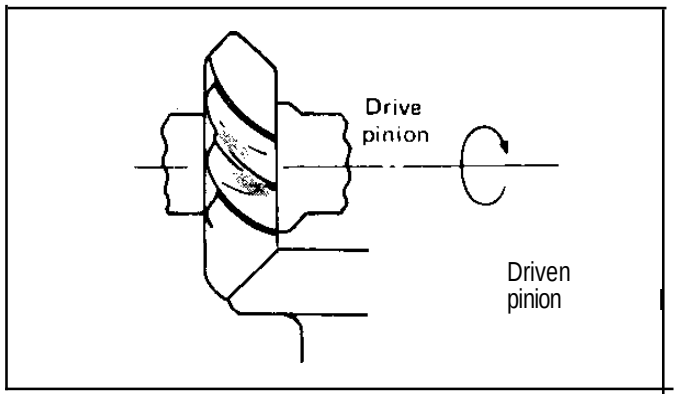

Increase shim thickness at A decrease shim thickness at B an equal amount.

Remove original contact pattern and recheck with fresh paint. If the new pattern is correct, thoroughly clean all paint from the teeth and flush the case several times with solvent to remove all traces of paint. Immediately oil all bearings with gear oil. Recheck gear lash.

(6) Final assembly

a. Install circlip on drive pinion shaft.

b. Remove housing cap screws. Clean threads and apply thread sealant such as "Loctite", and reinstall. Remove driven pinion bearing housing screws, clean threads and apply thread sealant. Tighten all screws to specified torque.

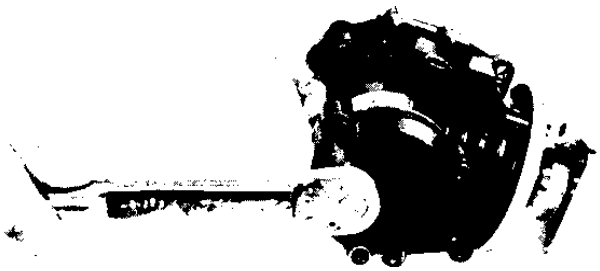

Bearing Housing Screw Torque (drive and driven pinion bearing housings) : 2.5 m-kg (18 ft-lb)

E. Driven Pinion Reassembly

(1) Heat driven pinion bearing housing to 100°C (212°F). Install new bearing outer races.

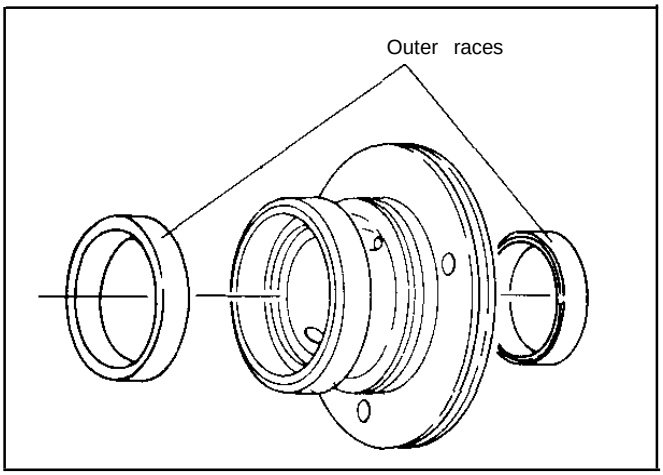

(2) Install the larger bearing on driven shaft using a press and a collar of the proper size. Oil the bearing.

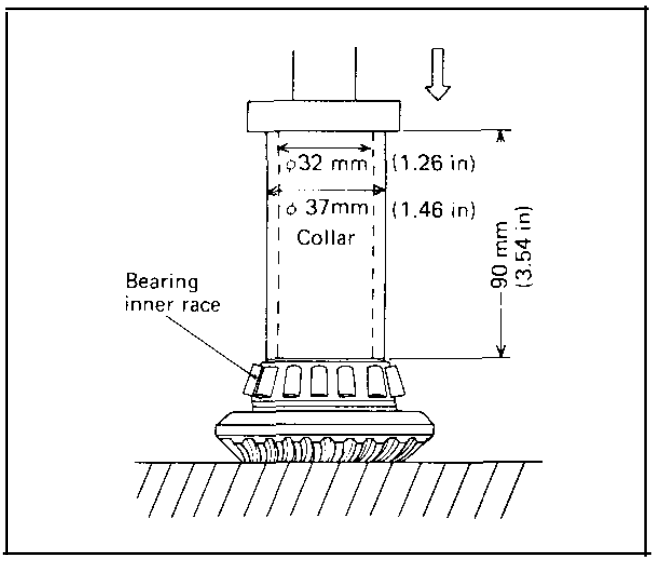

(3) Install smaller bearing inner race into bearing housing. Oil the bearing.

(4) Install a new oil seal into the bearing housing. Use a press if necessary.

(5) Install the washer and a new expansion spacer on the driven pinion shaft.

(6) Install the driven pinion assembly into the bearing housing assembly.

(7) Grease the inside surfaceof the bearing housing oil seal and install the flange.

(8) Install plate washer and nut. Gradually tighten nut to proper pre-load as follows:

a. Use a O-30 cm-kg torque wrench.

b. Hold flange and tighten nut slightly. Avoid obertightening. Overtightening will require disassembly and replacement of the expansion spacer.

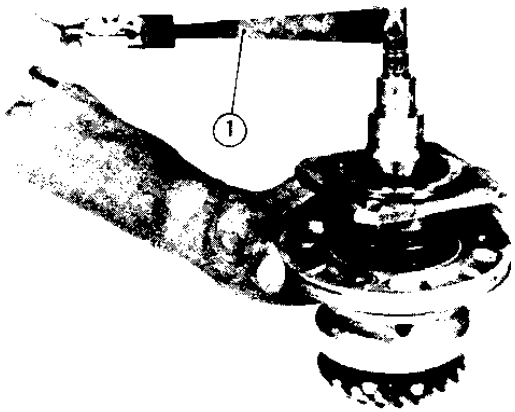

1 Torque wrench

c. Hold bearing housing and check preload. This preload is determined by turning the shaft with a torque wrench and measuring the resistance of the bearings to the rotation of the shaft.

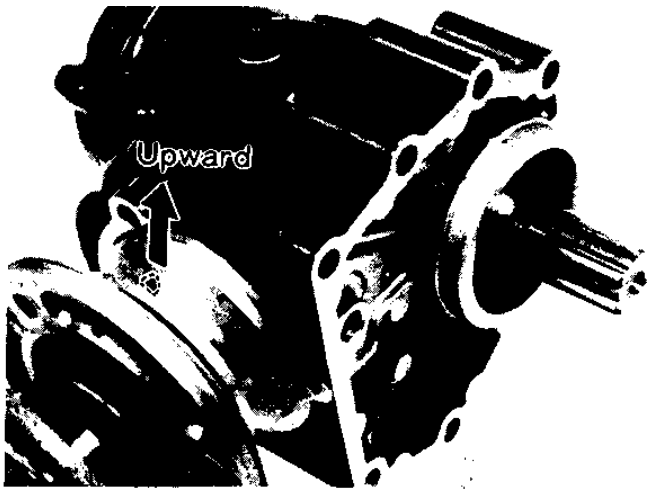

CAUTION:
Do not hold the bearing housing in a vise.

Preload Specification:
4 — 5 cm-kg (3.4 – 4.3 in-lb)
Nut tightening torque (for reference):
10~15m-kg (72 – 108ft-lb)

d. Repeat steps (a), (b) and (c) until proper preload is reached.

NOTE:
Early type 1 units used a slightly greater preload, however, use the above specification for all types,

(9) Apply tooth pattern checking paint to drive pinion gear. Check pattern and adjust if necessary. Use procedure for checking drive pinion.

(10) Install driven pinion assembly into middle gear case as shown. Clean bearing housing screws and apply thread sealant. Tighten to specified torque.

Driven Pinion Bearing Housing Screw
Torque: 2.5 m-kg (18 ft-lb)

FINAL GEAR

7-1. Disassembly and Inspection

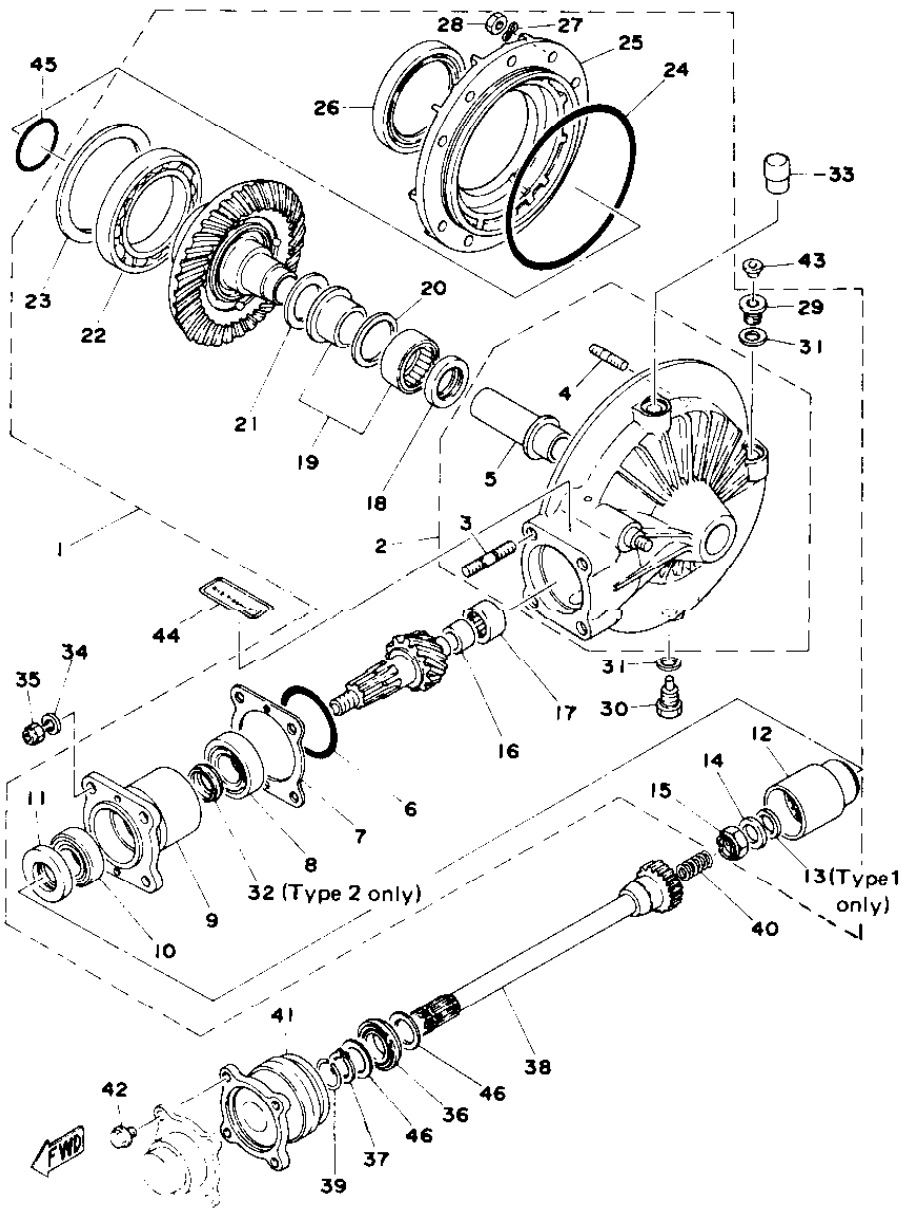

1. Rear axle gear case ass'y (Final gear case ass'y)
2. Drive shaft housing comp.
3. Stud bolt
4. Stud bolt
5. Guide collar
6. "O" ring
7. Drive pinion shim (0.30, 0.35, 0.40, 0.45, 0.50, 0.55)
8. Tapered roller bearing
9. Bearing housing
10. Tapered roller bearing
11. Oil seal (S-38-50-7)
12. Gear coupling
13. Bearing spacer (1.00, 1.52, 1.54, 1.56, 1.58, 1.60, 1.70, 1.80, 1.90)Type 1 only
14. Plate washer (14-26-4)
15. Self locking nut
16. Inner race
17. Bearing
18. Oil seal (S-30-42-7)
19. Bearing
20. Thrust washer (1.8, 1.9, 2.0, 2.1)
21. Thrust shim (0.1, 0.2)
22. Bearing (16014)
23. Ring gear shim ,0.25.0.3. 0.35.0.4.0.45.0.5~
24. "O" ring
25. Bearing housing
26. Oil seal (SD-70-90-10)
27. Wave washer
28. Nut
29. Oil inlet plug
30. Oil drain plug
31. Gasket
32. Expansion spacer (Type 2 only)
33. Breather comp.
34. Spring washer
35. "U"nut
36. Oil seal (OS0-37-43.6-7)
37. Circlip (S-26)
38. Drive shaft
39. Clip
40. Compression spring
41. Ball joint comp.
42. Washer based bolt
43. Bolt cap
44. Oil caution label
45. "O" ring (4-54.5)
46. Plate washer

A. Purpose of Ring Gear Removal

By removing the ring gear assembly only, the following inspections can be made.

(I) Drive pinion bearings (page 117 ~118, 125)

(2) Ring gear bearings

(3) Gear teeth condition

(4) Tooth contact pattern (page 121, 128 - 129)

(5) Drive pinion bearing preload (page 128 - 128)

B. Ring Gear Removal

(1) Remove the nuts (10) holding the bearing housing.

(2) Remove the ring gear assembly and thrust washer from final gear case.

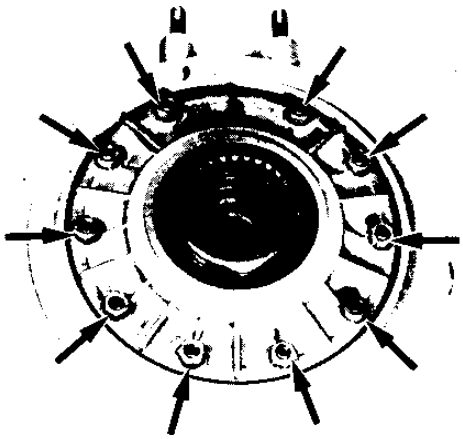

C. Inspection

Inspect bearings and gear teeth as in Middle Gear procedure. If necessary, check tooth contact pattern. See page 128 for basic procedure.

D. Drive Pinion Removal

Use two slied weights and 6 mm shafts to remove bearing housing.

NOTE:

On Type 2 Final Gear assemblies, remove bearing housing securing screw before removing bearing housing.

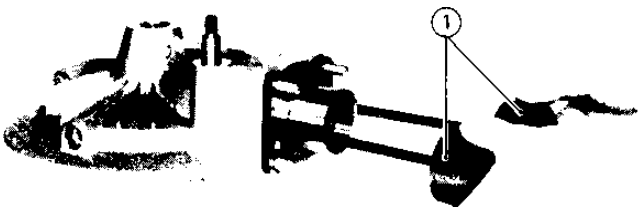

1. Slide weights

E. Drive Pinion Disassembly (replacement

NOTE:

The following drive pinion disassembly should be performed only if gearing replacement is necessary. Do not re-use bearings or races after removal.

(1) Hold gear coupling with special tool. Remove self-locking nut from drive pinion. Tap lightly with a soft hammer . . to remove drive pinion from coupling.

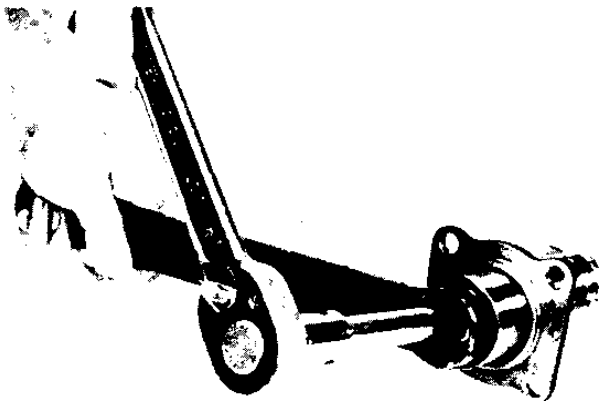

(2) Small bearing (front): Remove oil seal from bearing housing. Remove outer races. Use drift punch to remove outer race. Do not re-use bearing.

(3) Large bearing (rear): Use a universal-type bearing puller to remove inner race of large bearing from the drive pinion.

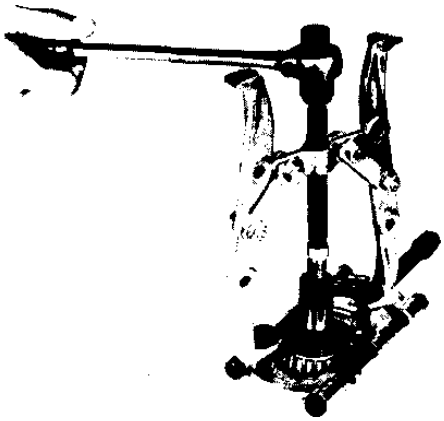

(4) Use a press and the press tool No. 1 (Special Tool) to push the guide oil seal, and roller bearing from the main housing. Use appropriate supports for the main housing during this operation. If undamaged, the roller bearing may be re-used. Do not re-use oil seal.

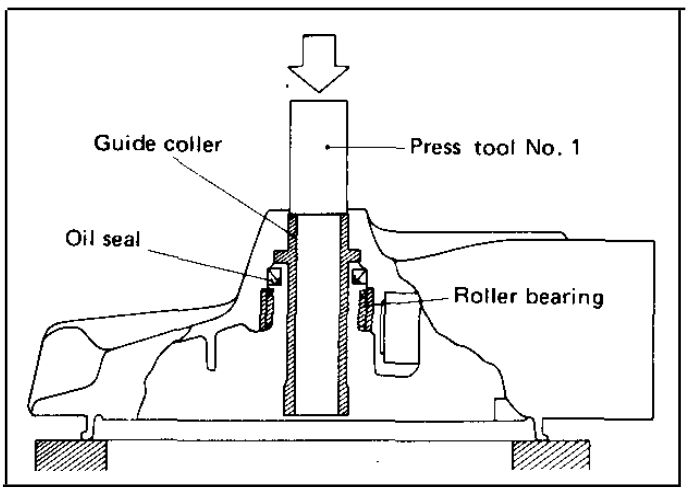

(5) Rear drive pinion roller bearing: Removal of this bearing is difficult and seldom necessary. Heat the bare housing to 150°C (302° F). Use appropriately shaped punch to remove the roller bearing outer race. Remove inner race from the drive pinion.

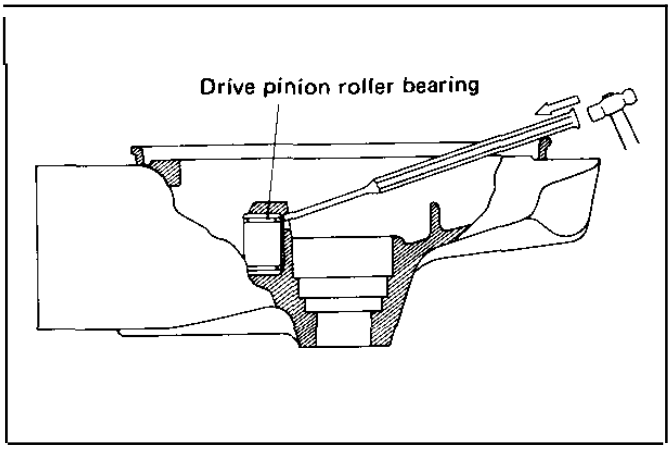

7-2. Reassembly and Adjustment

A. Drive Pinion Assembly

(1) Install 2 new bearing outer races into the drive pinion bearing housing.

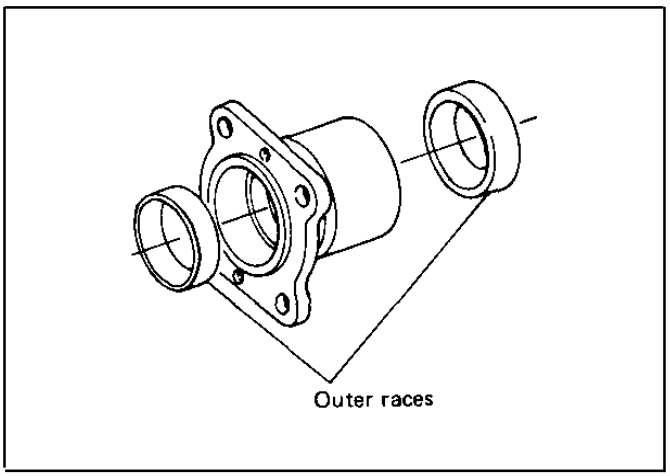

(2) Install the inner race of the smaller bearing to drive pinion shaft. Oil the bearing.

(3) Install the inner race of the smaller bearing into the bearing housing. Oil the bearing.

(4) Grease a new oil seal and install it into the bearing housing.

(5) Type 2 only: Install new expansion spacer on the drive pinion shaft.

(6) Install the drive pinion into the driven pinion bearing housing according to the following types and procedures.

Type 1:

a. Install the gear coupling, plate washer, and self-locking nut. Do not install spacers yet. Tighten nut gradually until proper bearing preload is reached. Overtightening will damage the bearings.

NOTE:

This preload is determined by turning the shaft with a torque wrench and measuring the resistance of the bearings to the rotation of the shaft.

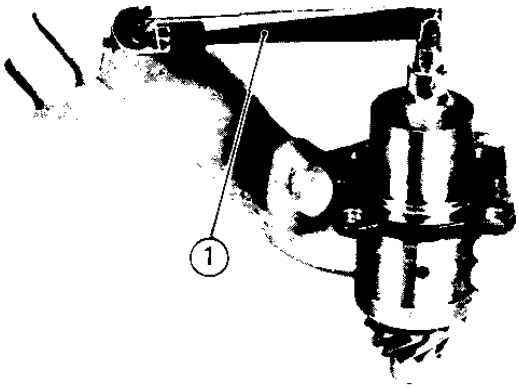

1. Torque wrench

Type 1 Bearing Preload:
10 – 12 cm-kg (9 – 10 in-lb)

b. Remove the nut and washer. Use a dial indicator and dial gauge stand (Special Tool) to measure the distance from the coupling shoulder ("a" in illustration) to drive pinion shoulder ("b").

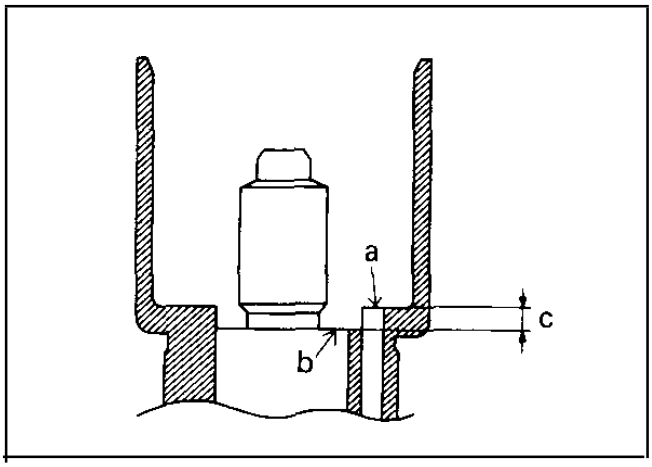

c. Choose spacers that will reduce clearance at "c" in the illustration to 0.02 mm (.0008 in) that is, the thickness of the spacers must be 0.02 mm less than the "c" dimension.

d. Install the spacers, plate washer, and nut. Tighten nut to specified torque and check preload.

Specified torque: 7.5–8.5 m-kg (54-61 ft-lb)

Preload:10-12 cm-kg (9-10 in-lb)

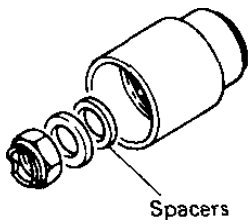

e. If the preload is less than specified, reduce the spacer thickness by 0.02 mm (.0008 in) more (total gap to 0.04 mm). If preload is still not to specification, reduce gap in 0.02 mm steps until the preload is correct. Check for correct assembly of parts.

f. If the preload is over specification, increase the spacer thickness by 0.02 mm in) and recheck preload.

Type 2: Follow the same procedure described for the Middle Gear driven pinion.

Type 2 Bearing Preload: 4 – 5 cm-kg (3.4 – 4.3 in-lb) Nut tightening torque (for reference): 10 – 15 m-kg (72 ~ 108 ft-lb)

(7) Install new O-ring on drive pinion bearing housing (all types).

(8) Install original shim on bearing housing. Align and install bearing housing assembly.

Alignment:

Type 1: The oil hole in the bottom of the bearing housing must align with the slot in the bottom of the final drive housing.

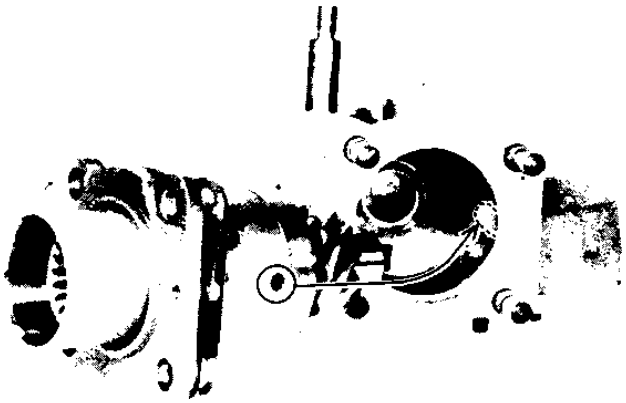

Type2: Align the bearing housing securing screw hole with the corresponding hole in the final drive housing.

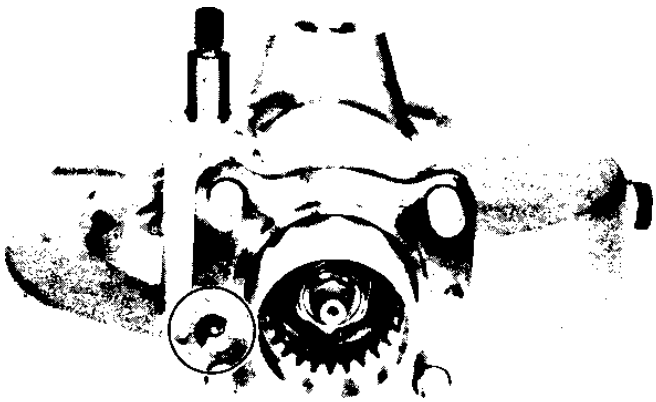

(9) Check gear lash as described in Section **5-2.** Page 114 Adjust as necessary by the following procedure:

a. Lash too large: Install one-size smaller ring gear shim.

b. Lash too small: Install one-size larger ring gear shim. Recheck gearlash.

B. Tooth Contact pattern and Gear Lash

(1) Remove drive pinion assembly from final gear housing. The ring gear must be assembled for this check.

(2) Apply contact pattern checking paint to ring gear. (See Section 6–2 **D** for basic contact pattern checking procedure. Page 121)

(3) Observe the locations of the following components.

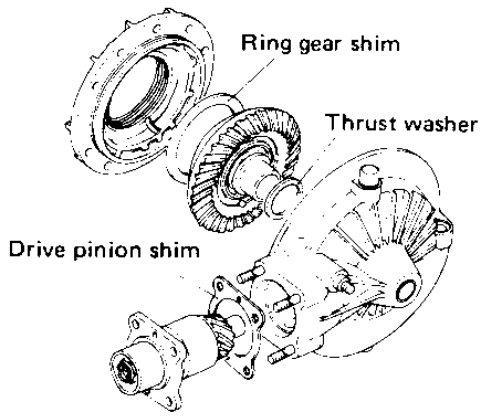

NOTE:

In the following pattern adjustment procedures, always increase or decrease the drive pinion shim for adjusting the tooth contact and increase or decrease the ring gear shim for adjusting the gear lash.

Correct pattern

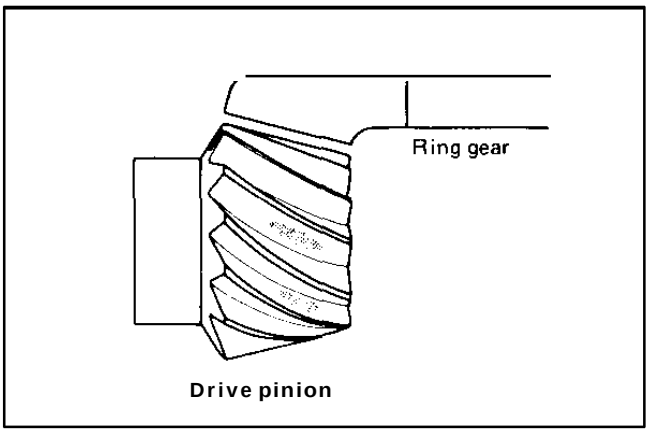

Incorrect Pattern

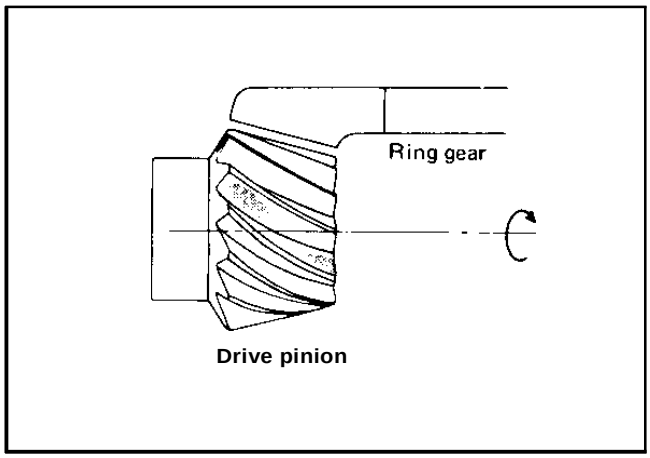

Correction Procedure:

a. Reduce drive pinion shim 0.05 mm.

b. Recheck tooth pattern.

c. If necessary, repeat step "a" in 0.05 mm steps.

Incorrect pattern

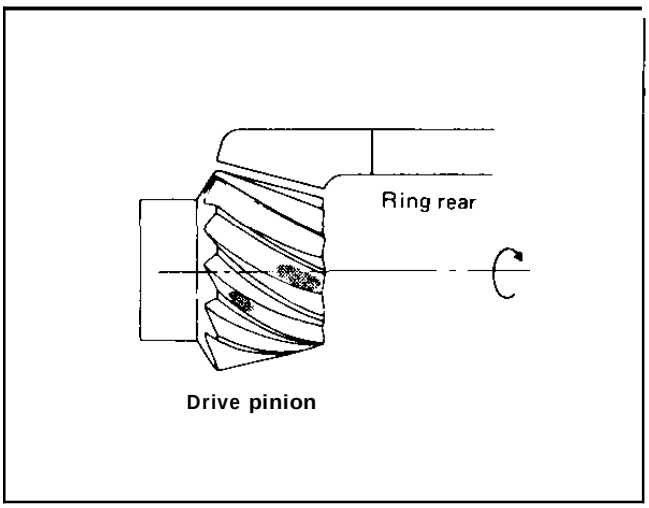

Correct Procedure:

a. Increase drive pinion shim 0.05 mm.

b. Recheck tooth pattern.

c. If necessary, repeat step "a" in 0.05 mm steps.

(4) Check and adjust gear lash. *(See* Page **114** , Section 5-2)

To reduce gear lash, increase ring gear shim. To increase gear lash, reduce ring gear shim. If it is necessary to increase ring gear shim by more than 0.1 mm reduce the thrust washer thickness by 0.1 mm for each 0.1 mm of ring gear shim increase and if it is necessary to reduce shim by more than 0.1 mm, reverse above procedure.

(5) Final assembly

a. Remove drive pinion bearing housing assembly and apply a small amount of Yamaha Bond # **4** as shown.

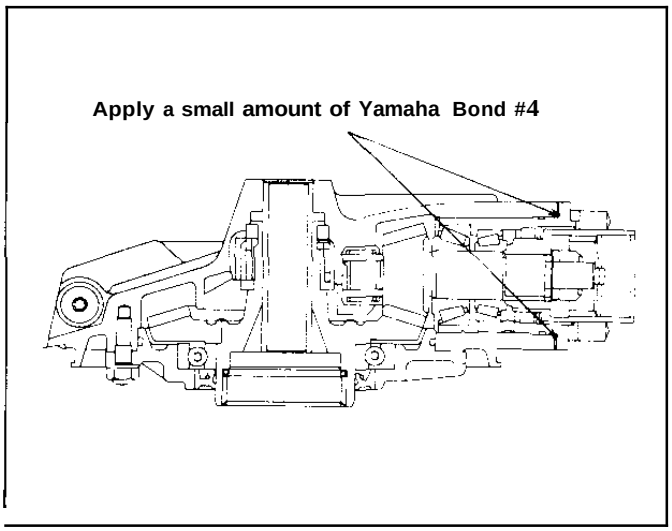

b. Reinstall the bearing housing assembly into final gear case.

c. For Type 2 only: Install the screw to bearing housing and tighten it.

C. Ring Gear Assembly

(1) Ring gear assembly components

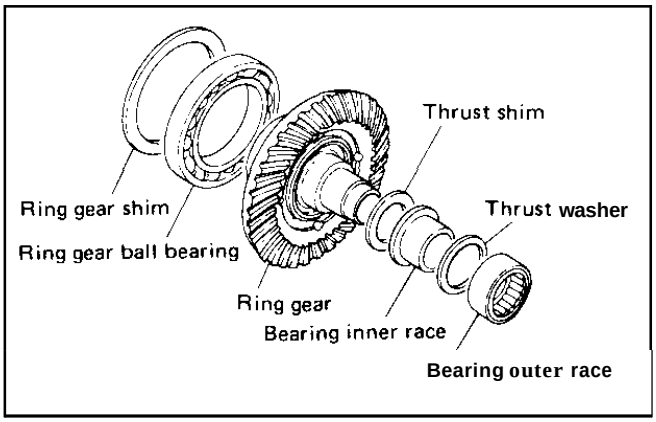

(2) Roller bearing replacement

a, Remove original roller bearing assembly (2 pieces). Remove thrust washer and assemble the inner and outer races of the bearing for measurement. Use a micrometer to measure the assembled size as shown.

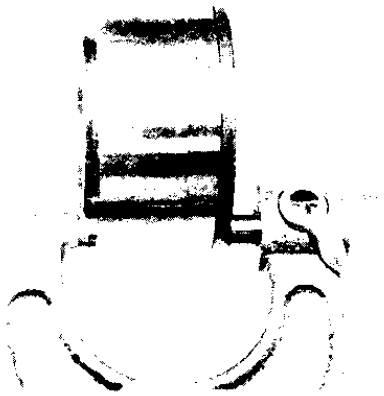

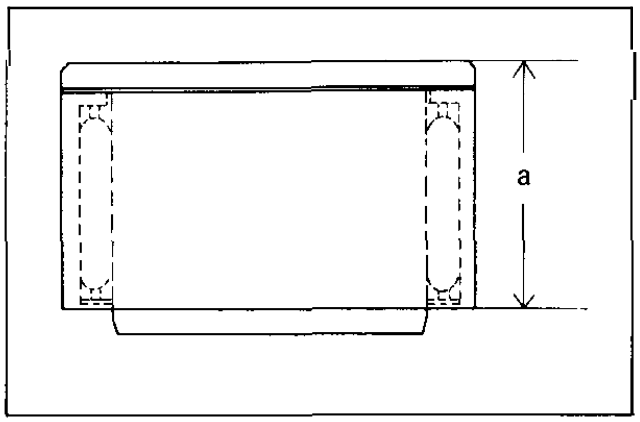

b. Measure the new roller bearing assembly the same way (without thrust shim)

c. **If** the distance "a" of the old and new bearings in different, remove and measure the thrust shim (not the thrust washer).

d. **Use** a new thrust shim that is thicker or thinner to correspond to the difference between the old and new roller bearing assemblies. Install the new bearing and thrust shim.

Example: Old bearing. . . . . .a
New bearing. . . . . a + 0.1 mm
Old thrust shim . . . . . b
Choose: New thrust shim. . b – 0.1 mm

(3) If undamaged, reinstall ring gear ball bearing and original shim. If bearing is replaced, use a new shim of the same size. Continue reassembly in the reverse order of disassembly. Use press tool 2 (Special Tool) to install oil seal and bearing.

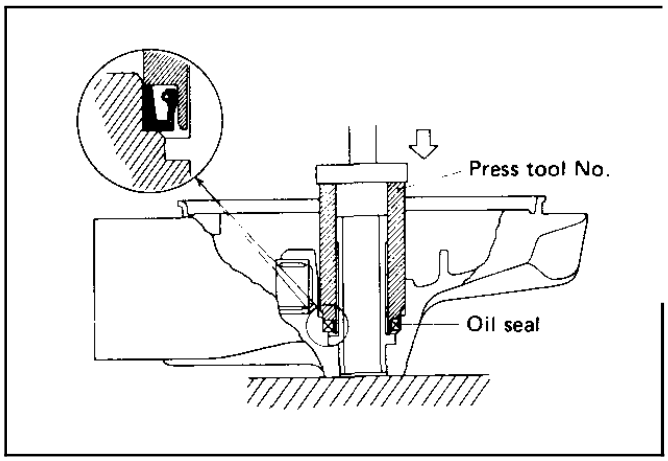

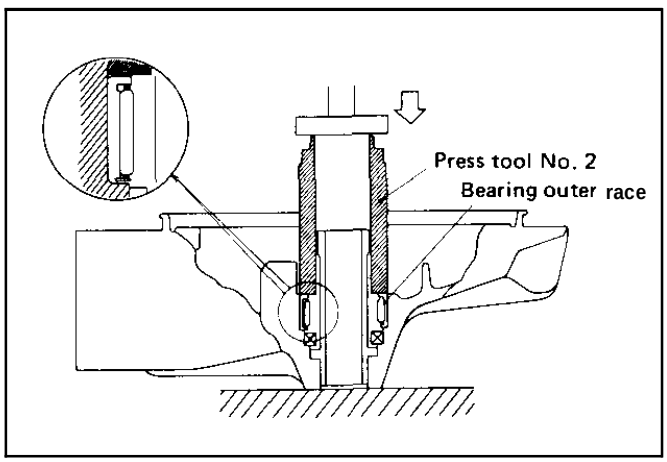

DRIVE SHAFT

8-l. Drive Shaft Inspection

A. Removal

See page 113, Section 5-1D for drive shaft removal.

B. Inspection

(1) Inspect oil seal for damage. If damaged, replace the oil seal.

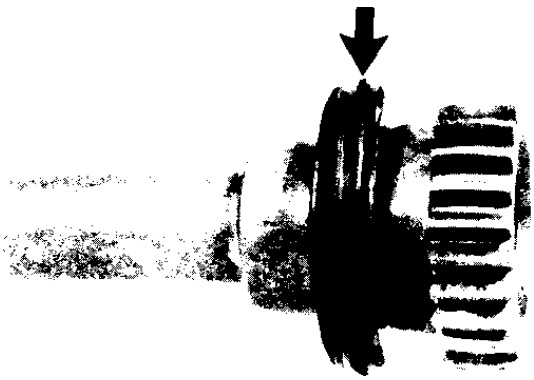

(2) Inspect shaft splines have excessive wear and/or damaged, replace the drive shaft.

NOTE:

When installing the drive shaft, lubricate splines and oil seal with light coat of lithium soap base grease.

8-2. Ball Joint inspection

A. Removal

Remove middle gear and final gear cases. Remove drive shaft. The ball joint can now be easily removed from the swing arm cavity.

NOTE:

The ball joint cannot be disassembled. If damaged, it must be replaced.

Inspection

Inspect ball joint for leakage. The ball joint should move freely up and down, and from side to side. It should not move when twisted. See illustrations.

6-1 ELECTRIC STARTING SYSTEM

A. Starter Motor

1. Circuit diagram.

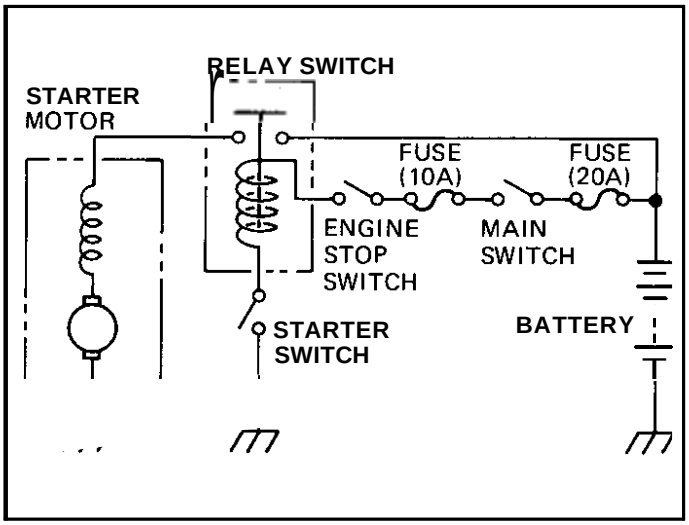

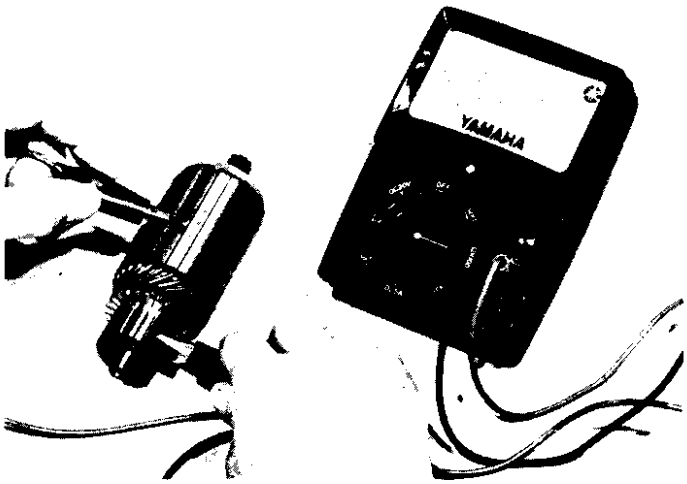

2. Removal (see Section 3-2, Engine Disassembly).

3. Inspection and repair

a. Check the outer surface of the commutator. If its surface is dirty, clean with No. 600 grit sand paper.

b. The mica insulation between commutator segments should be 0.5~0.8mm (0.02~0.03") below the segment level. If not, scrape to proper limits with appropriately shaped tool. (A hack saw blade can be ground to fit.)

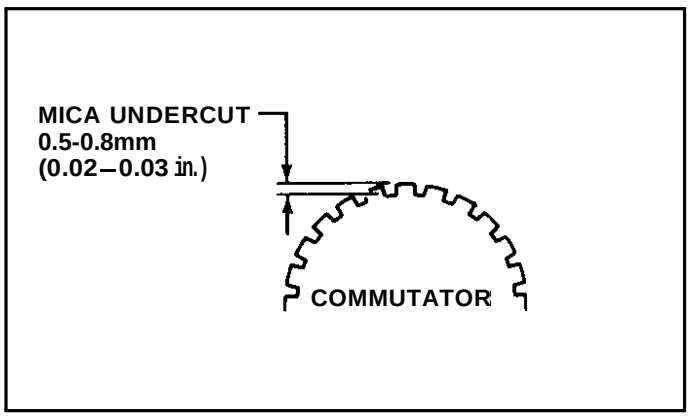

c. Check the armature and field coil for shorting and insulation. Replace armature as required.

	Coil Resistance
Armature coil	0.007 Ω (20°C)
Field Coil	0.01 Ω (20°C)

d. Check the front and rear cover bearings for damage. If damaged, the starter assembly must be replaced.

e. Check brush length. Replace brush if at, or near, limits.

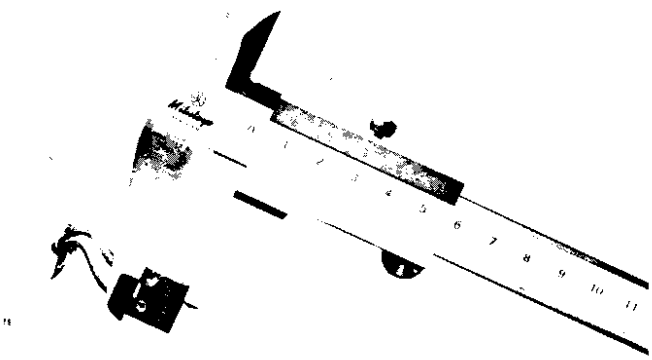

Minimum brush lenoth: 5.5mm (0.22 in.)

f. Check brush spring pressure. Replace spring if it is weak.

B. Starter Relay Switch

1. Inspection

a. Disconnect starter relay leads at the relay.

b. Connect pocket tester leads to the relay terminals (ohms x 1 scale).

c. Turn ignition on ("I" position) and engine stop switch to "RUN".

d. Push starter button. The relay should click once and the scale should read zero ohms. If the relay clicks but the scale does not read zero, the relay must be replaced.

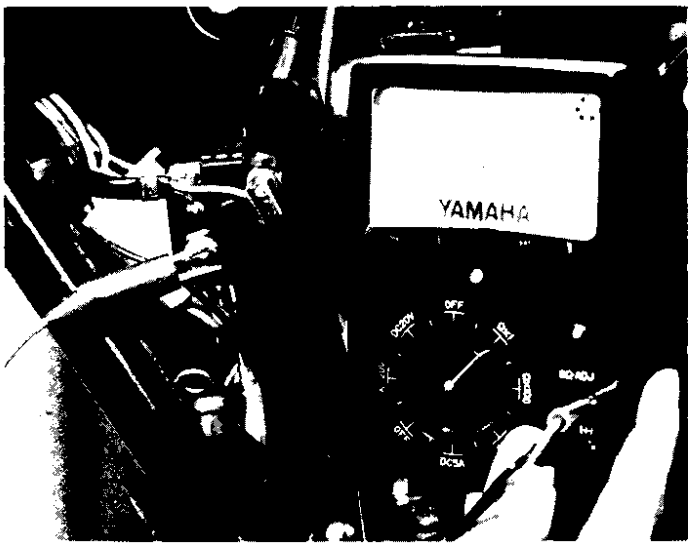

e. If the relay does not click, check the wires from the starter button and the battery (red/white, blue/white). Turn ignition off. Use (ohms x 1) scale on tester. The resistance between these wires should be no more than **3.5** ohms. If there is more resistance, the relay should be replaced.

6-2 CHARGING SYSTEM

A. Charging Circuit Diagram

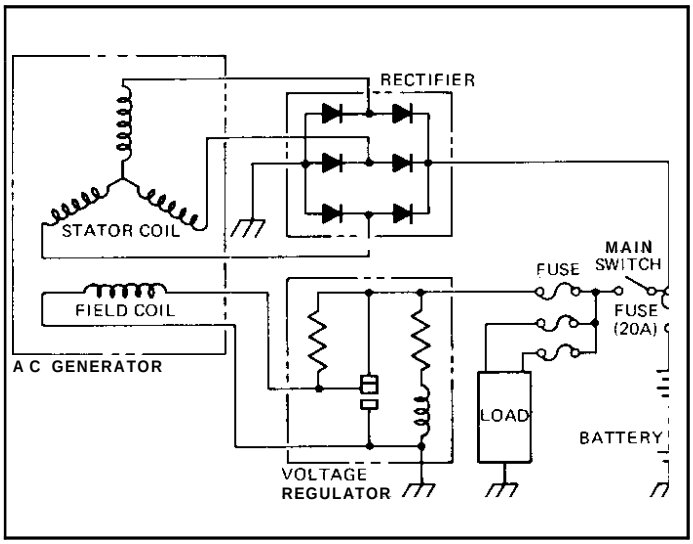

B. A.C. Generator

1. Checking method.

a. Connect D.C. voltmeter to the battery terminals.

b. Start engine.

c. Accelerate engine to approximately 2,000 rpm or more and check generated voltage.

Generated voltage: 14.5±0.5V

d. If the indicated voltage cannot be reached, then perform the tests in step 2.

NOTE: Never disconnect wires from the battery while the generator is in operation. If the battery is disconnected, the voltage across the generator terminals will increase,damaging the

2. Resistance test of field coil and stator coil.

Check the resistance between terminals. If resistance is out of specification, coil is broken. Check the coil connections. If the coil connections are good, then the coil is broken inside and it should be replaced.

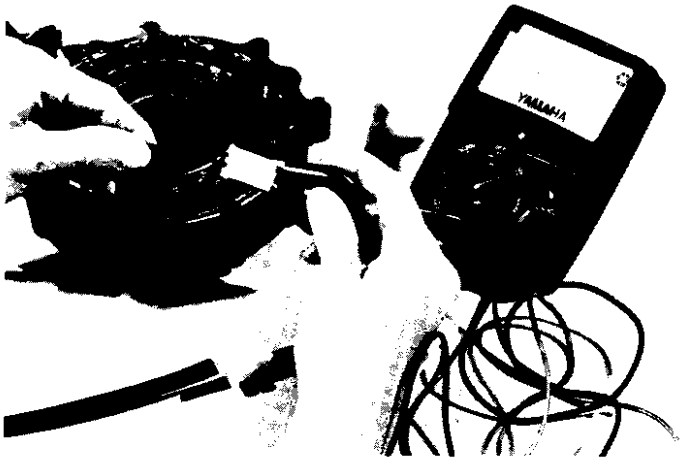

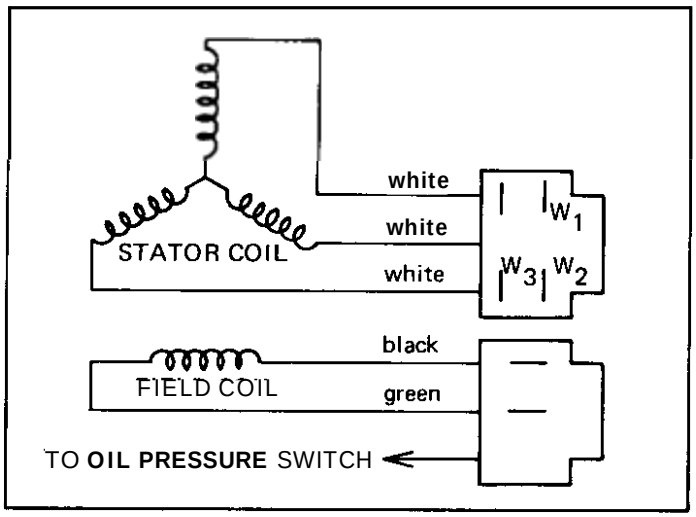

Field coil resistance: (Green-Black)
4.04 ohms ± 10% at 20°C (68°F)

Stator coil resistance:
(W1-W2, W2-W3. W3-W1)
0.48 ohms ± 10% at 20° C (68° F)

C. Voltage Regulator

The regulator's function is to pass a controlled amount of current through the field windings which creates a magnetic field that produces a charging voltage in the three stator windings.

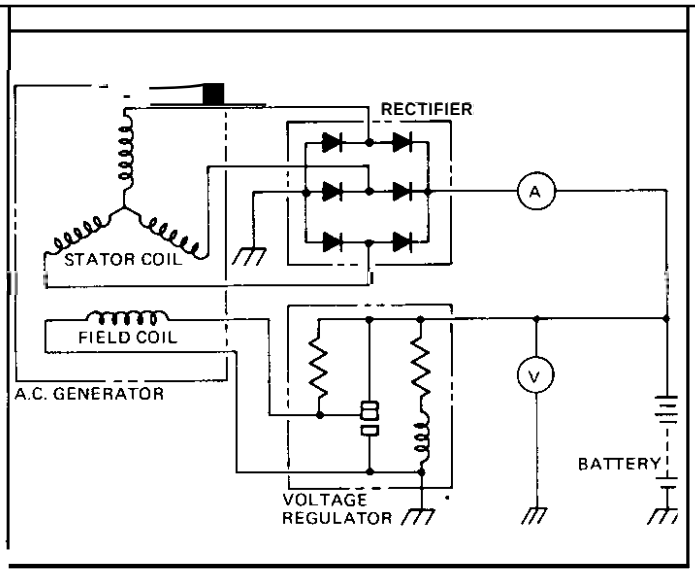

1. When adjusting the regulator, a D.C. voltmeter, ammeter, and tachometer are necessary. They are connected as illustrated, and adjustment should be made in the following sequence:

a. Remove the regulator from the frame, and check the contact points. If the point surfaces are rough, they should be smoothed with sand paper (No. 500 or No. 600). After sandpapering, thoroughly clean contact points with contact point-cleaner.

b. Check the core and points for gap adjustment. If any gap is incorrect, it should be adjusted.

First adjust the core gap and then the point gap.
Core gap . . . . . .0.6~1.0mm
Point gap. . . . . .0.3~0.4mm

NOTE: No adjustment is required for the yoke gap.

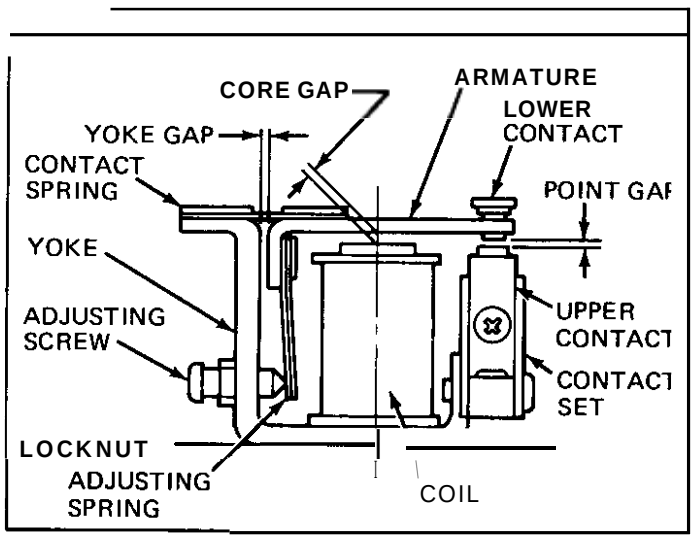

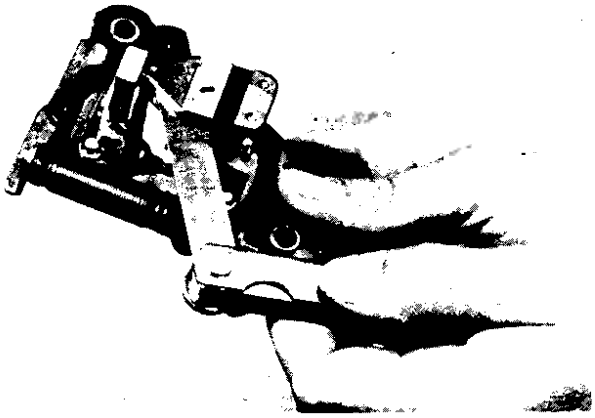

c. Charging voltage output can be controlled at the regulator. Inside the housing is a screw that pushes against a flat spring steel plate. This is the adjusting screw.

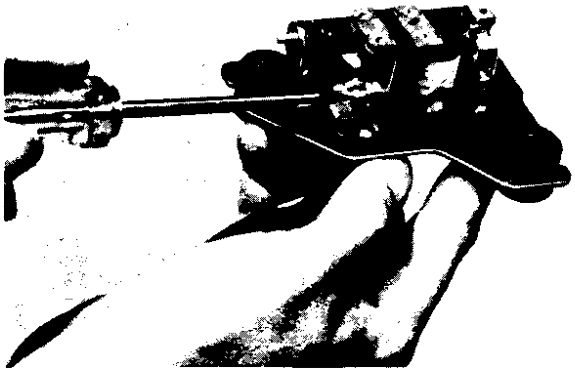

d. Before starting engine, disconnect wire connector (coupler) containing 5 wires from rectifier (1 red, 1 black, 3 white). Remove the RED wire from the connector. Connect pocket tester (DC20V) red tester lead (+) to red wire from rectifier. Connect tester black (–) to good ground. Start engine. Tester should indicate 14.5~15V (DC).

CAUTION: Take care to not short the red wire. If this wire is shorted, the rectifier could be damaged.

After the adjustment, the generated voltage shows slight fluctuations as illustrated below. When the generator speed increases from low (the lower contact is in operation) to high (the upper contact is in operation), the voltage fluctuates slightly, but this is a normal phenomenon. If the voltage shows a 0.5 volt increase, the adjustment is considered to be correct. If the voltage increase is more or less than 0.5 volt, the core gap should be readjusted.

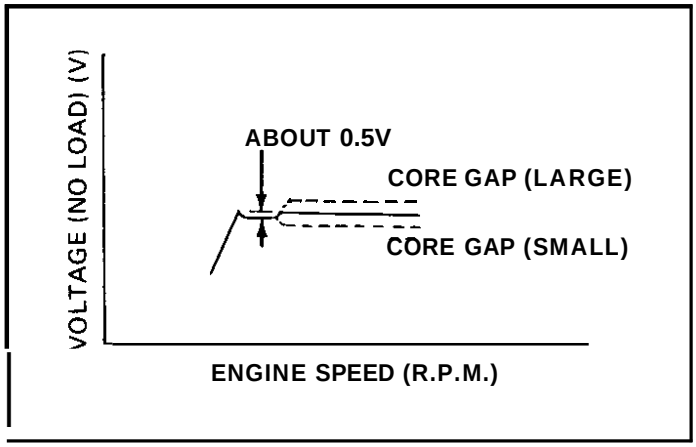

NOTE: The regulator should be checked every 12,000 km (8,000 mi.) of operation.

D. Checking Silicon Rectifier

1. Check silicon rectifier as specified using the Yamaha Pocket Tester.

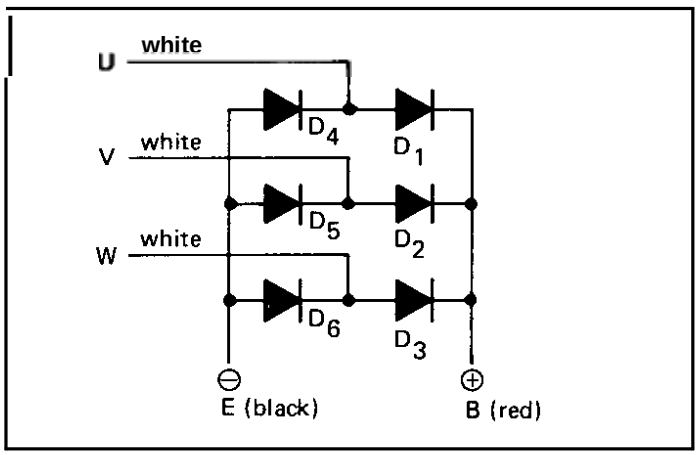

Continuity: Con
Discontinuity: Dis

Checking element	Pocket test connecting point (+) (red)	Pocket test connecting point (-) (black)	Element O.K.	Replace (element shorted)	Replace (element
D1	B U	U B	Con inf	Con Con	inf inf
D2	B V	V B	Con ∞	Con Con	inf inf
D3	B W	W B	Con inf	Con Con	inf inf
D4	U E	E U	Con inf	Con Con	inf inf
D5	V E	E V	Con inf	Con Con	inf inf
D6	W E	E W	Con inf	Con Con	inf inf

Even if only one element is broken, replace assembly.

CAUTION: The silicon rectifier can be damaged if subjected to overcharging. Special care should be taken to avoid a short circuit and/or incorrect connection of the positive and negative leads at the battery. Never connect the rectifier directly to the battery to make a continuity check.

E. Battery

1. Checking

a. If battery sulfation (white accumulation) occurs on plates due to lack of battery electrolyte. the battery should be replaced.

b. If the bottoms of the cells are filled with corrosive material falling off the plates, the battery should be replaced.

c. If the battery shows the following defects, it should be replaced:

1) The voltage will not rise to a specific value even after many hours of charging.

2) No gassing occurs in any cell

3) The battery requires a charging voltage of more than regulating voltage in order to supply a current of 1.4A for 10 hours.

2. The service life of a battery is usually 2 to 3 years, but lack of care as described below will shorten the life of the battery.

a. Negligence in keeping battery topped off with distilled water.

b. Battery being left discharged.

c. Over-charging with heavy charge.

d. Freezing.

e. Filling with water or sulfuric acid containing impurities.

f. Improper charging voltage or current on new battery.

Battery	12V 14AH
Electrolyte	Specific gravity: 1.28 Quantity: 81Occ
Initial charging current	1.4 amp for 10 hours (new battery)
Recharging current	10 hours (or until specific gravity reaches 1.28)
Refill fluid	Distilled water (to maximum level line)
Refill period	Check once per month (or more often, as required)

3. If the motorcycle is not to be used for a long time, remove the battery and have it stored. The following instructions should be observed:

a. Recharge the battery periodically.

b. Store the battery in a cool, dry place.

c. Recharge the battery before reinstallation.

6-3 IGNITION SYSTEM

A. Ignition Circuit Diagram

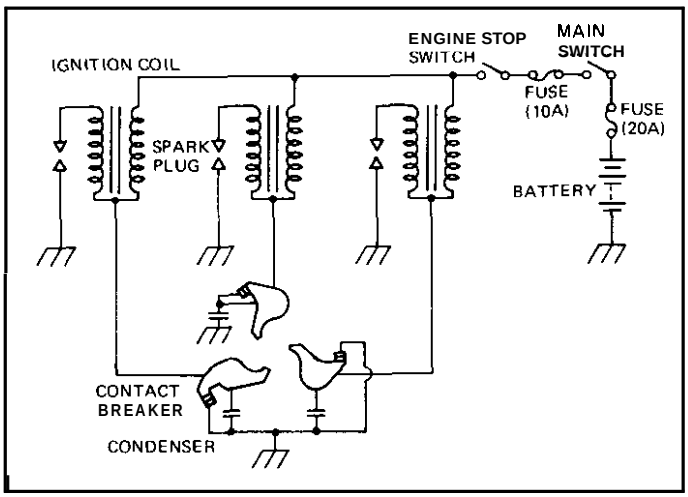

B. Governor Assembly

1. Inspection

a. Both weights must pivot smoothly or ignition advance will not occur at the proper rpm, nor will it advance to its fullest extent. On occasion, lightweight grease must be applied to the weight pivot pins.

b. Check the operation of the point cam on the shaft. It must rotate smoothly.

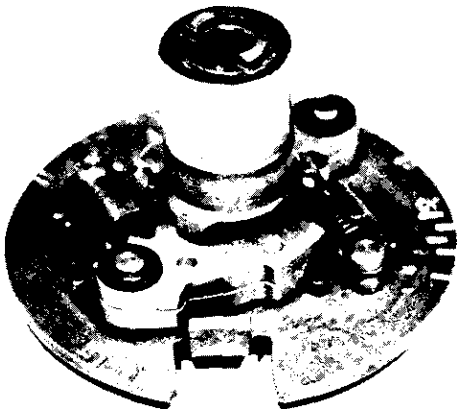

c. Examine point cam surface. If surface is pitted or worn, the governor assembly must be replaced.

C. Spark Gap Test

The entire ignition system can be checked for misfire and weak spark using the ElectroTester. If the ignition system will fire across a sufficient gap, the engine ignition system can be considered good. If not, proceed with individual component tests until the problem is found.

1. Warm up engine thoroughly so that all electrical components are at operating temperature.

2. Stop engine and connect tester as shown.

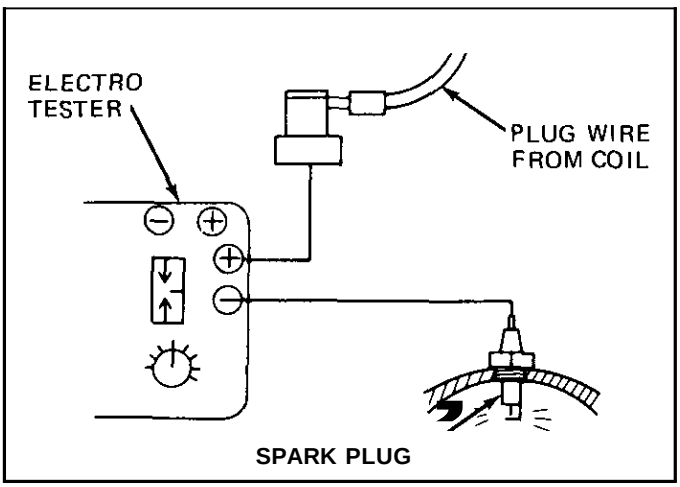

3. Start engine and increase spark gap until misfire occurs. (Test at various rpm's between idle and red line.)

Minimum spark gap: 6mm (0.24 in.)

D. Ignition Coil

1. Coil spark gap test.

a. Remove fuel tank and disconnect ignition coil from wire harness and spark plug.

b. Connect Electro Tester as shown.

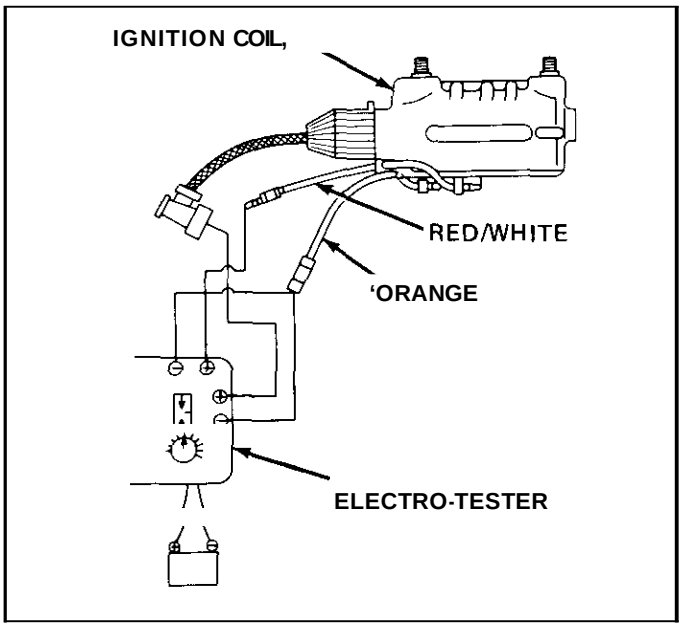

c. Connect fully charged battery to tester.

d. Turn on spark gap switch and increase gap until misfire occurs.

Minimum spark gap: 6mm (0.24 in.)

2. Direct current resistance test.

Use a pocket tester or equivalent ohmmeter to determine resistance and continuity of primary and secondary coil windings.

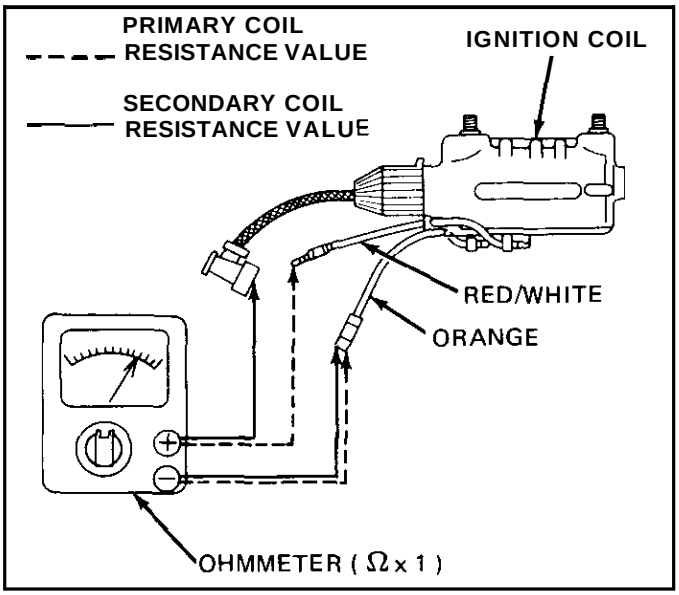

Standard values:

Primary coil resistance:
4.0 ohms ± 10% at 20°C (68°F)

Secondary coil resistance
11.0K ohms ± 20% at 20°C (68°F)

Insulation test.

a. Connect ohmmeter as shown (ohms x 1,000 or more).

b. Resistance reading should be ∞ or at least 3M ohms. If less, replace.

E. Condenser Test

If the contact points show excessive wear, or the spark is weak (but the ignition coil is in good condition), check the condenser.

1. Capacity test (use Electro Tester).
   INSULATION TEST.
   a. Calibrate capacity scale.

   b. Connect tester

   c. Meter needle will deflect and return to center as condenser is charged. After needle stops, note reading on "μF" scale.

Condenser capacity: 0.22μF ± 10%

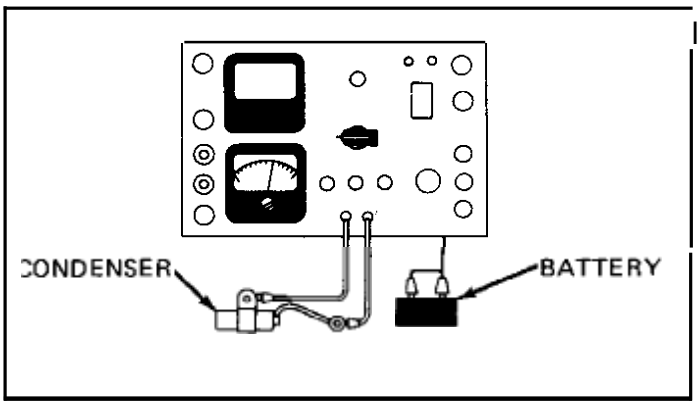

CAUTION: After this measurement, the condenser should be discharged by shorting the positive lead wire to the condenser case.

6-4 SPARK PLUG

The life of a spark plug and its discoloring vary according to the habits of the rider. At each periodic inspection, replace burned or fouled plugs with suitable ones determined by the color and condition of the bad plugs. One machine may be ridden only in urban areas at low speeds; another may be ridden for hours at high speed. Confirm what the present plugs indicate by asking the rider how long and how fast he rides. Recommend a hot, standard, or cold plug type accordingly. It is actually economical to install new plugs often since it will tend to keep the engine in good condition and prevent excessive fuel consumption.

A. How To "Read" A Spark Plug (Condition)

1. Best condition: When the porcelain around the center electrode is a light tan color.

2. If the electrodes and porcelain are black and somewhat oily, replace the plug with a hotter type for low speed riding.

3. If the porcelain is burned or glazed white and/or the electrodes are partially burned away, replace the plug with a colder type for high speed riding.

B. Inspection

Instruct the rider to:

1. Inspect and clean the spark plug every 3,200km (2,000 miles).

2. Clean the electrodes of carbon and adjust the electrode gap.

3. Be sure to use the proper reach plug as a replacement to avoid overheating, fouling or piston damage.

Spark plug type: N-7Y (Champion) or BP-7ES (NGK)

Spark plug gap: 0.7~0.8mm (0.028~0.031")

6-5 LIGHTING AND SIGNAL SYSTEMS

A. Lighting Tests and Checks

The battery provides power for operation of the horn, tail light, stop light, neutral light, and flasher light. If
The battery provides power for operation of the horn,

The battery provides power for operation of the horn, tail light, stop light, neutral light, and flasher light. If none of the above operates, always check battery voltage before proceeding further. Low battery voltage indicates either a faulty battery, low battery water, or a defective charging system. See section

6-2 Charging System, for checks of battery and charging system. Also check fuse condition. Replace any "open" fuses. There are individual fuses for various circuits (see complete Circuit Diagram).

1. Horn does not work:

a. Check for 12V on brown wire to horn.

b. Check for good grounding of horn (pink wire) when horn button is pressed.

2. Brake light does not work:

a. Check bulb.

b. Check for 12V on yellow wire to brake light.

c. Check for 12V on brown wire to each brake light switch (front brake' and rear brake switches).

3. Tail light does not work:

a. Check bulb.

b. Check for 12V on blue wire.

c. Check for ground on black wire to tail/brake light assembly.

4. Flasher light(s) do not work:

a. Check bulb.

b. Right circuit:

1) Check for 12V on dark green wire to light.

2) Check for ground on black wire to light assembly.

c. Left circuit:

1) Check for 12V on dark brown wire to light.

2) Check for ground on black wire **to** light assembly.

d. Right and left circuits do not work:

1) Check for 12V on brown/white wire to flasher switch on left handlebar.

2) Check for 12V on brown wire to flasher relay.

3) Replace flasher relay.

4) Replace flasher switch.

e. Check flasher self-canceling system. (Refer to flasher self-canceling system.)

5. Neutral light does not work:

a. Check bulb.

b. Check for 12V on sky blue wire to neutral switch.

c. Replace neutral switch.

6. Oil pressure light does not work:

a. Connect oil pressure switch (black/red wire) to ground. If light comes on, check for proper oil pressure.

b. If oil pressure is correct, replace oil pressure switch.

B. Reserve Lighting System

1. Description:

The reserve lighting system has two functions: (1) It notifies the rider that one of the head lamp filaments is inoperative, and (2) it switches current from the inoperative filament to the remaining functional filament.

The system is connected to the headlight circuit only. The reserve lighting system unit is located under the fuel tank.

HEADLIGHT CONDITION	"HEAD" INDICATOR LIGHT	RESERVE LIGHTING FUNCTION
Normal	*Comes on (very dim)	
High beam faulty	Comes on	Low beam comes on
Low beam faulty	Comes on	High beam comes on at low brilliance

C. Self-Canceling Flasher System

1. Description:

The self-canceling flasher system turns off the turn signal after a period of time or distance involved in turning or changing lanes. Generally, the signal will cancel after either10 seconds. or 130 meters (142 yards), whichever is greater. At very low speed, the function is determined by distance; at high speed, it is determined by time. At low speed, especially when changing speeds, the canceling determination is a combination of both time and distance.

2. Operation:

The handle switch has three positions: -- L (left), OFF, and R (right). The switch lever will return to the "OFF" position after being pushed to L or R, but the signal will function. By pushing the lever in, the signal may be cancelled manually.

3. Circuit diagram.

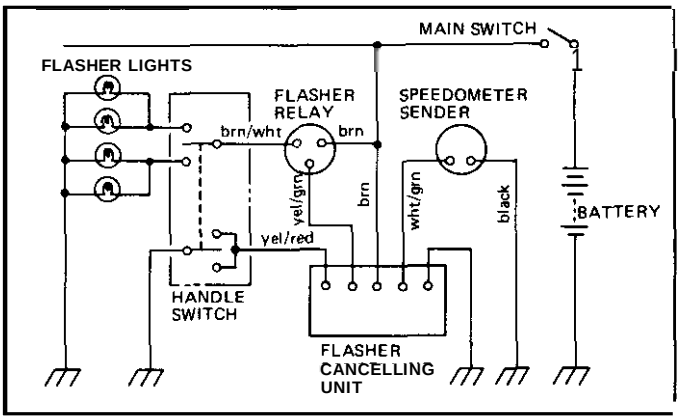

4. Inspection:

If the flasher self-canceling system should be. come inoperative, proceed as follows:

a. Pull off the 6-pin connector from the flasher canceling unit, and operate the handle switch.

If the signal operates normally in L, R, and OFF, the following are in good condition:

1) Flasher unit.
2) Bulb.
3) Lighting circuit.
4) Handle switch light circuit.

If (1) through (4) are in good condition, the following may be faulty:

1) Flasher canceling unit.
2) Handle switch reset circuit.
3) Speedometer sensor circuit.

b. Pull off the 6-pin connector from the flasher canceling unit, and connect a tester (ohms x 100 range) across the white/green and the black lead wires on the wire harness side. Turn the speedometer shaft. If the tester needle swings back and forth, four times between 0 and ∞, the speedometer sensor circuit is in good condition. If not, the sender or wire harness may be inoperative.

c. Pull off the 6-pin connector from the flasher canceling unit. Check if there is continuity between the yellow/red lead wire on the wire harness side and the chassis.

Flasher switch OFF.	.inf
Flasher switch L or R	.0 ohms

If the tester needle does not swing as indicated above, check the handle switch circuit and wire harness.

d. If no defect is found with the above three check-ups and the flasher canceling system is still inoperative, replace the flasher canceling unit.

e. If the signal flashes only when the handle switch lever is turned to L or R and it turns off immediately when the handle switch lever returns to center, replace the flasher canceling unit.

HEADLIGHT DOES NOT FUNCTION

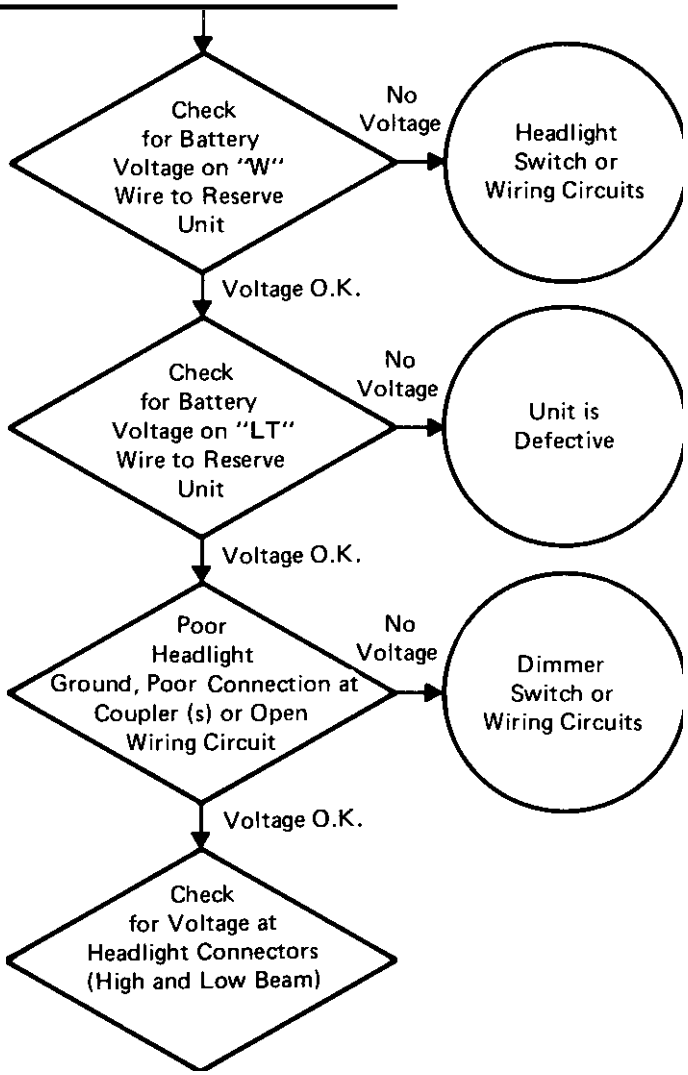

"HEAD" INDICATOR BULB DOES NOT GLOW

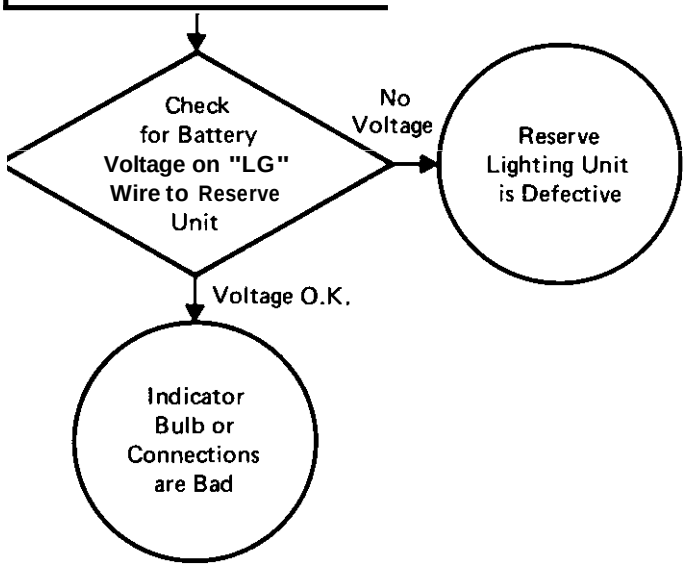

INDICATOR LIGHT DOES NOT LIGHT WHEN LOW BEAM COMES ON—HIGH BEAM IS DEFECTIVE

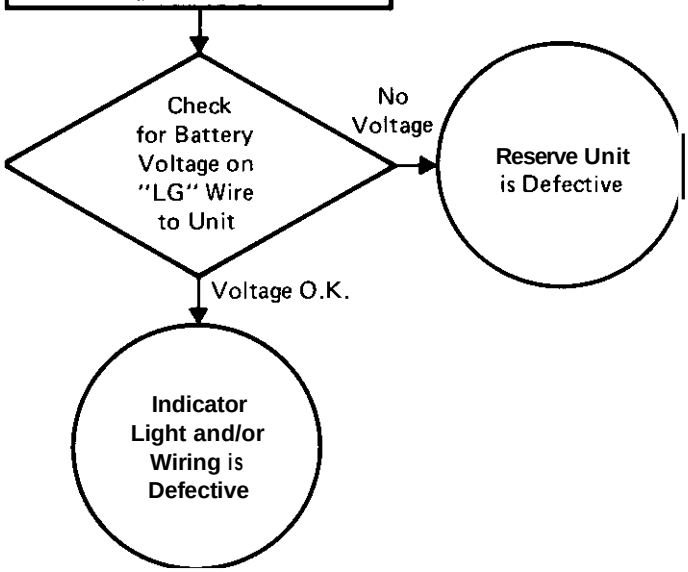

LOW BEAM DOES NOT FUNCTION WITH HIGH BEAM DEFECTIVE

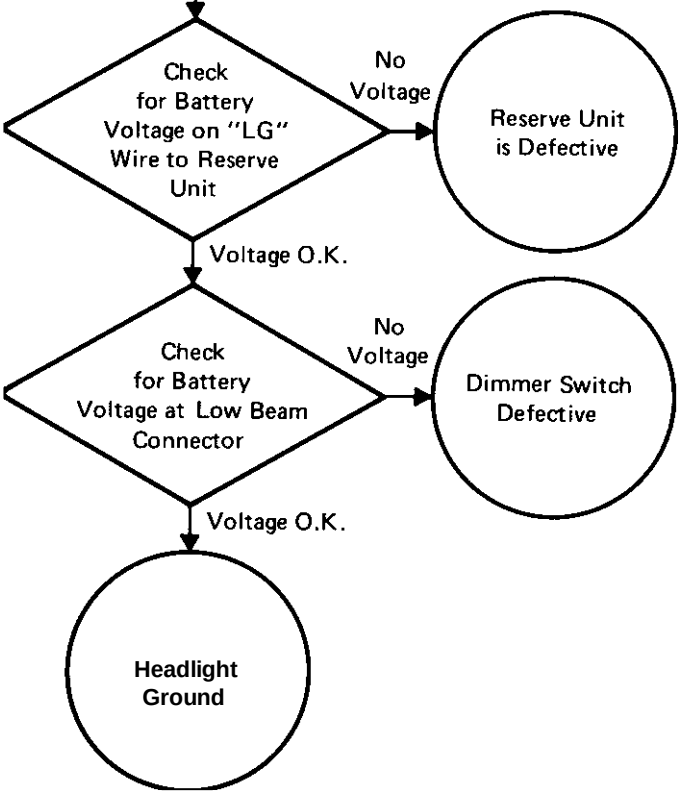

HIGH BEAM DOES NOT LIGHT WHEN LOW BEAM IS DEFECTIVE

Check for Battery Voltage on "LG" Wire to Reserve Unit

No Voltage → Reserve Unit is Defective

Voltage O.K. ↓

Check for Battery Voltage at (6) Resister Terminal

No Voltage → Dimmer Switch is Defective

Voltage O.K. ↓

Check for Battery Voltage at (7) Resister Terminal

No Voltage → Register is Defective

Voltage O.K. ↓

Check for Battery Voltage at Headlight High Beam Terminal

No Voltage → Open or Poor Connection between Headlight and (7) Resister Terminal

Voltage O.K. → Poor Ground or Poor Connection of Headlight Wiring

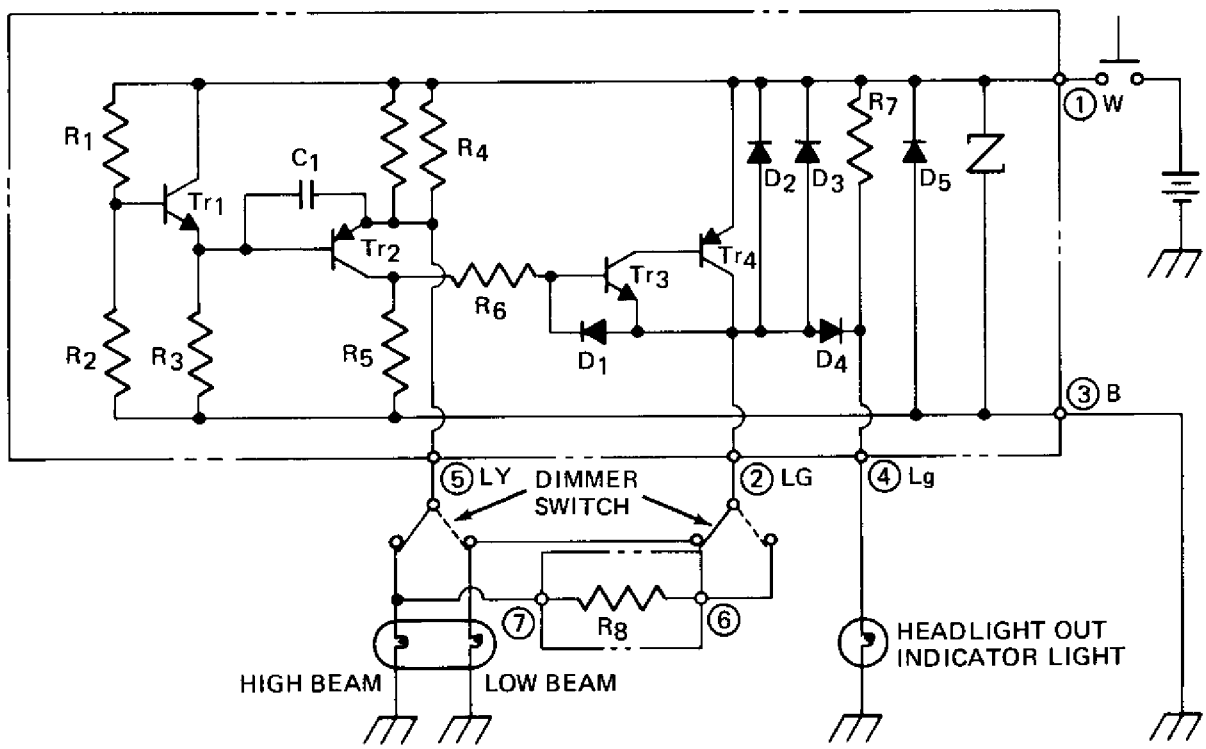

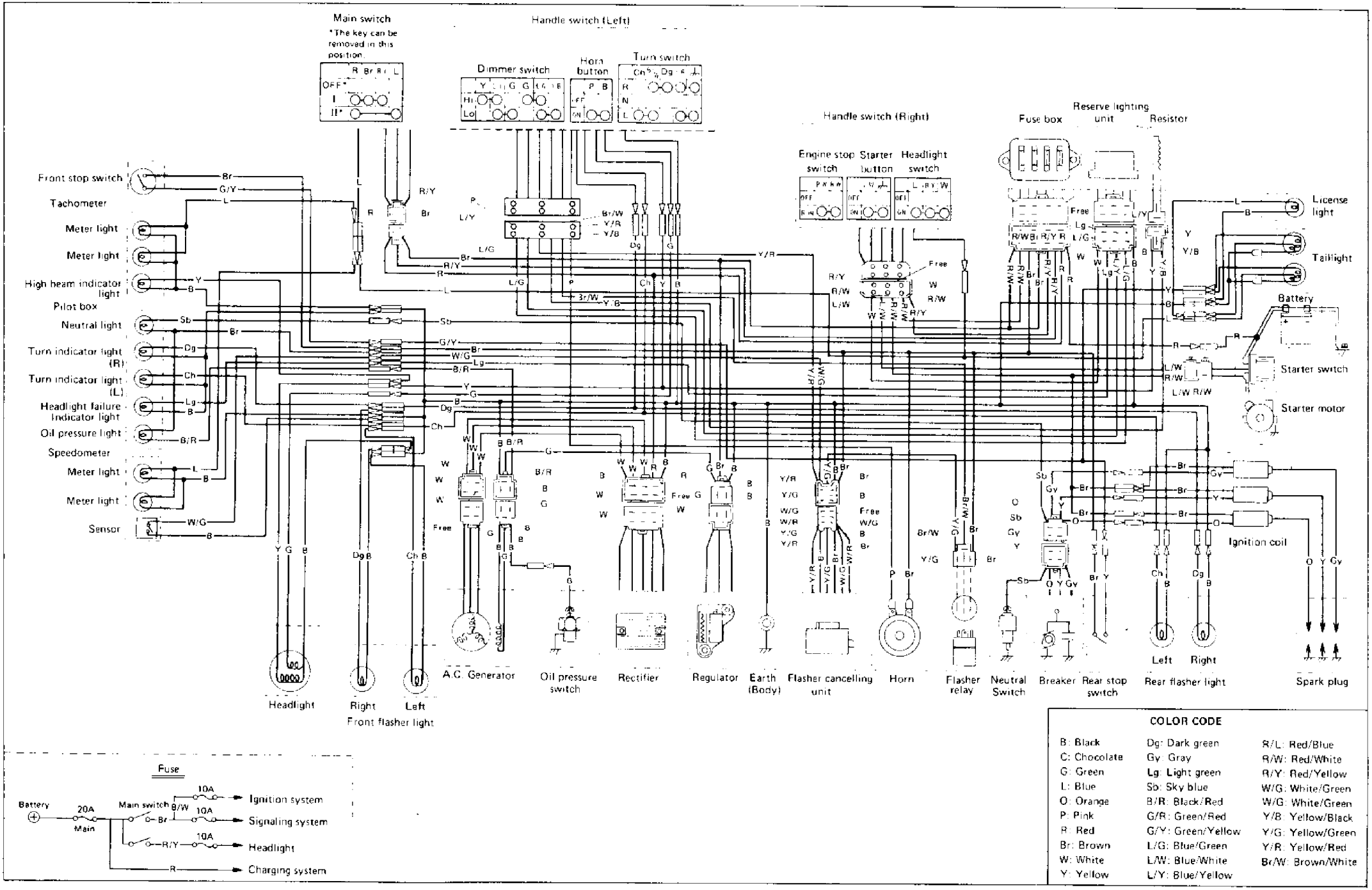
Main switch
*The key can be removed in this position.
Handle switch (Left)
Dimmer switch
Horn button
Turn switch
Handle switch (Right)
Engine stop switch
Starter button
Headlight switch
Fuse box
Reserve lighting unit
Resistor
Front stop switch
Tachometer
Meter light
Meter light
High beam indicator light
Pilot box
Neutral light
Turn indicator light (R)
Turn indicator light (L)
Headlight failure Indicator light
Oil pressure light
Speedometer
Meter light
Meter light
Sensor
License light
Taillight
Battery
Starter switch
Starter motor
Ignition coil
Headlight
Right
Left
Front flasher light
A.C. Generator
Oil pressure switch
Rectifier
Regulator
Earth (Body)
Flasher cancelling unit
Horn
Flasher relay
Neutral Switch
Breaker
Rear stop switch
Rear flasher light
Left
Right
Spark plug
Fuse
Battery
20A
Main
Main switch
10A
Ignition system
10A
Signaling system
10A
Headlight
Charging system
COLOR CODE
B: Black
C: Chocolate
G: Green
L: Blue
O: Orange
P: Pink
R: Red
Br: Brown
W: White
Y: Yellow
Dg: Dark green
Gy: Gray
Lg: Light green
Sb: Sky blue
B/R: Black/Red
G/R: Green/Red
G/Y: Green/Yellow
L/G: Blue/Green
L/W: Blue/White
L/Y: Blue/Yellow
R/L: Red/Blue
R/W: Red/White
R/Y: Red/Yellow
W/G: White/Green
W/G: White/Green
Y/B: Yellow/Black
Y/G: Yellow/Green
Y/R: Yellow/Red
Br/W: Brown/White

CASE EXCHANGE

When the exterior of the middle gear or final gear case is damaged and must be replaced, pay attention to the numbers scribed on the replacement cases. Follow assembly instructions in the appropriate section of this manual.

9-1. **Middle** Gear Case Replacement

A. Selection **of** Drive Pinion Shim
Note the number scribed on the middle gear cases (original and replacement). Note the original drive shim thickness:

Example: Replacement 79.73
Original 79.93
Original shim . . . . . .0.10 rnm

Formula for determining new shim: Original shim – (new case number – original case number)

Example: 0.10-(79.73-79.93)
0.10-(-0.2.)
0.10 + 0.20
0.30 new shim

Notice that the subtraction of a negative number-(-0.20) is the same operation as adding that amount as a positive number. Use this shim and the normal instructions for installation of middle gear components described in Page 119, Section 6-2.

B. Selection **of** Driven Pinion Shim
Note the number scribed on the middle gear cases. Proceed as in above steps (Page 122, Section 6–2. E).

C. Final Inspection
Install gear assemblies according of appropriate sections of this manual. Check tooth contact patterns and gear lash before mounting new assembly on machine. Refer to 6, Section 6-2D for tooth contact pattern inspection. Page 121

9-2. Final Gear Case Replacement

Selection of new drive pinion shim(s) and thrust shim(s) is similar *to* middle gear drive pinion shim determination.

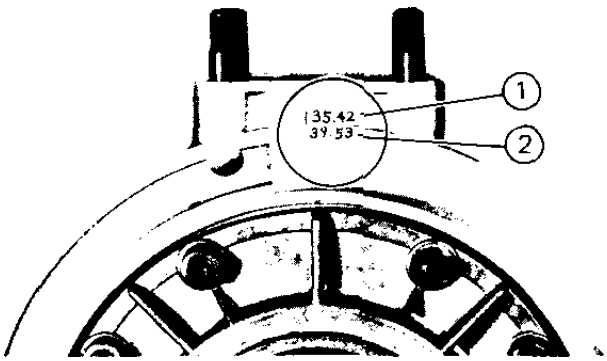

1. **Drive** pinion **ride**
2. Ring **gear**

APPENDICES

1. Tightening Torque, Gear Lash and Bearing Preload Chart

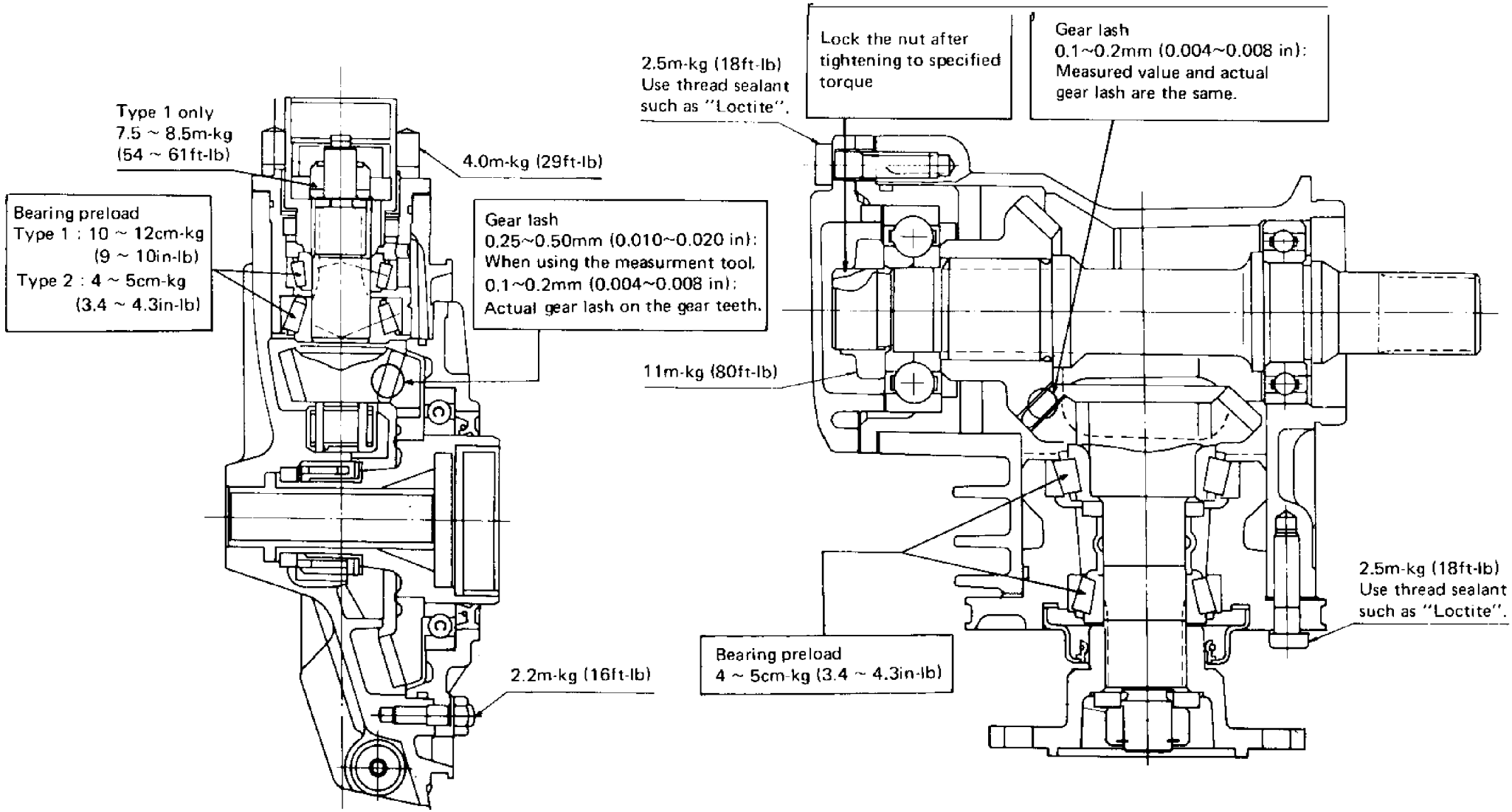

2. Interchangeability of Parts for Type 1 and Type 2

NOTE:

All the parts except the following parts are interchangeable for both Type 1 and Type 2. These items can be used, however, on both Type 1 and Type 2 provided they are used for replacement in a set.

A. Middle Gear

Parts Name	Parts No.	
	Type 1	Type 2
Middle gear housing	YG4-11011-00-1G	1J7-17511-Y0
Bearing housing	YG4-11011-10-0G	1J7-17521-Y0
Pinion shim	YG4-11710-70-0G	1J7-17531-Y0
Housing cap gasket	YG4-11005-40-0G	1J7-17519-Y0
Housing cap	1J7-17538-01	1J7-17538-Y1

B. Final Gear

Parts Name	Parts No.	
	Type 1	Type 2
Drive shaft housing camp.	YG4-11011-50-0G	1J7-46150-Y0
Bearing housing	YG4-11006-90-1G	1J7-46124-Y0
Gear coupling	YG4-11707-11-0G	1J7-46123-Y0
Expansion spacer	———	

OIL PRESSURE INFORMATION

Relief valve opening 5kg/cm^2 (70psi)

Cruising speed oil pressure
(at operating temperature) over 3kg/cm^2 (42psi)

Oil warning light activation pressure 0.3kg/cm^2 (4.2psi)

OIL FEED

OIL SCAVENGE (Return)

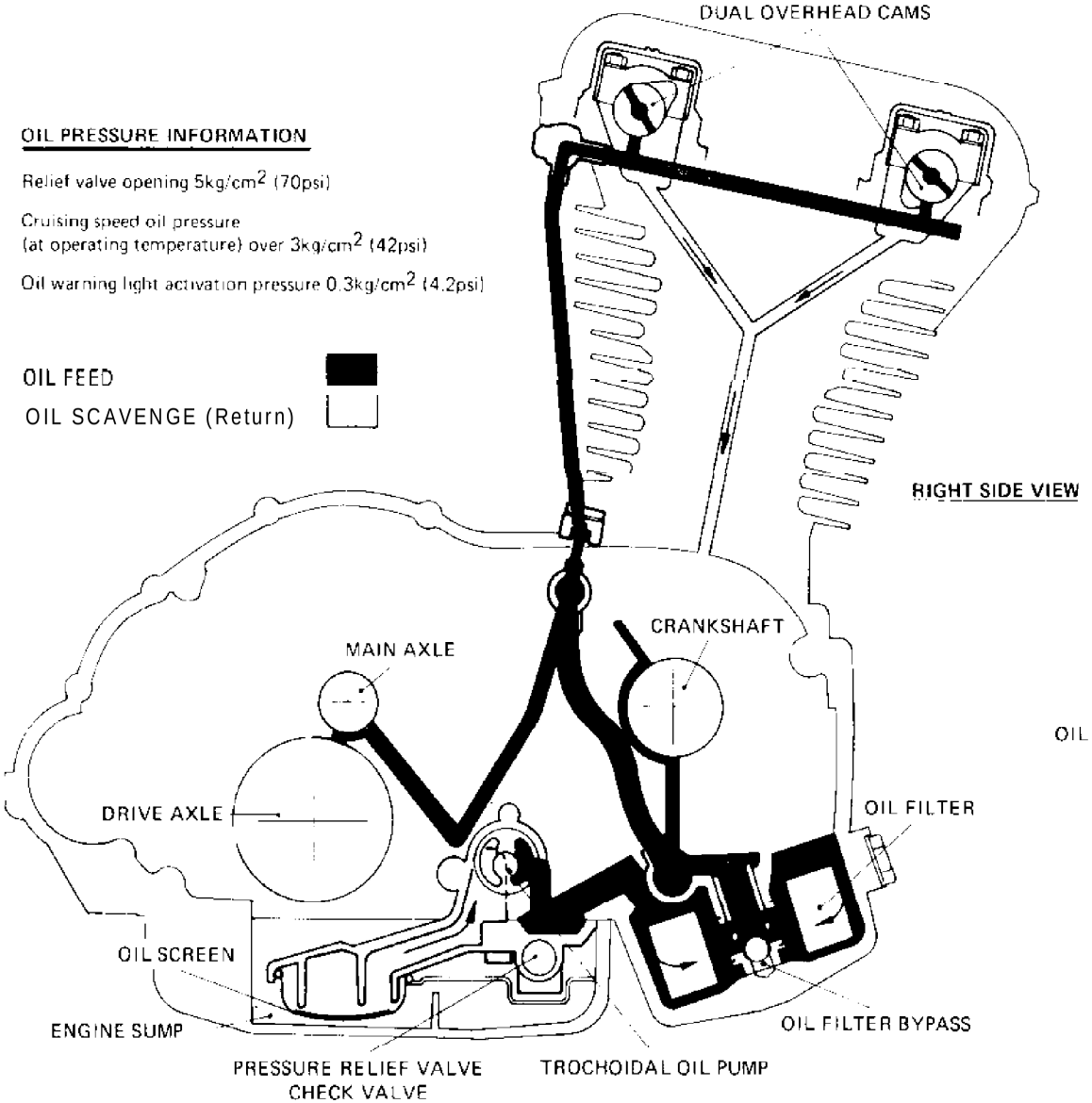

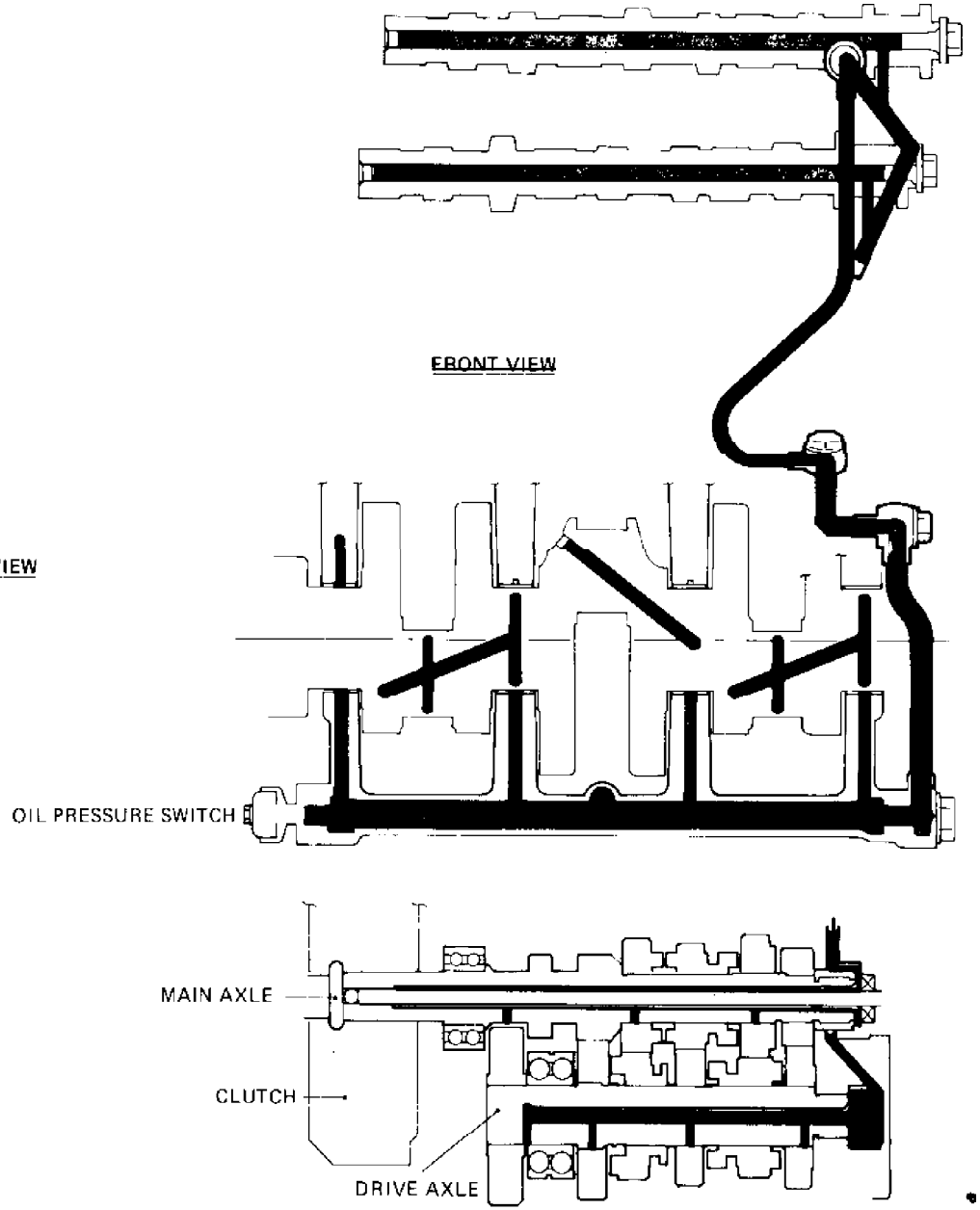

S U P P L E M E N T

XS750 – 2D

Note: This section only covers those points which are different from the XS 750 D.
If the subject does not appear in this section, please refer to the Contents page.

SPECIFICATIONS (XS750-2D Only)

A. GENERAL SPECIFICATIONS	
Dimensions:	
Overall length	2,160 mm (85.0 in)
Overall width	895 mm (35.2 in)
Overall height	1,150 mm (45.3 in)
Seat height	820 mm (32.3 in)
Wheelbase	1,470 mm (57.9 in)
Minimum ground clearance	140 mm (5.5 in)
Caster (steering head angle)	27°
Trail	110 mm (4.3 in)
Weight:	
Net	232 kg (512 lb)
Engine:	
Type	D.O.H.C., air-cooled, triple
Bore x stroke x cylinders	68 mm x 68.6 mm x 3
Displacement	747 cc
Compression ratio	8.5 : 1
Lubrication:	
Lubrication system	Pressure lubricated, wet sump
Delivery pump type	Trocoid pump
Carburetion:	
Manufacture	Mikuni
Type, I.D. No., Quantity	BS34, Constant velocity, 1J701,3pcs
Rated venturi size	34 mm

Air filter:	
Type	Dry foam rubber
Ignition:	
Type	Battery/coil
Spark plug	NGK BP-7ES or CHAMPION N-7Y
Charging:	
Type	Three-phase, regulated alternator
Manufacture, I.D. No.	Hitachi LD120-02
Maximum output	14.5 V/18A
Battery type	12V 14A-Hr.
Battery dimensions	134 x 166 x 89 mm
Regulator	National RD1143. IC Regulator
Rectifier	National RD1143, Silicon, full wave
Starting	Transmission Coupled kick Mitsuba Electric SM-224C
Primary deive	
Type	Hy-Vo silent chain
Teeth, ratio	45/27 (1.666)
Clutch	Wet, multiple disc
Transmission:	
Type	Constant mesh, 5-peed, drum shifter
Teeth. ratio, overall 1st	32/13 (2.461) 13.285
2nd	27/17 (1.588) 8.636
3rd	26/20 (1.300) 7.069
4th	23/21 (1.095) 5.955
5th	22/23 (0.956) 5.201
Secondary Drive:	
Type	Shaft drive
Transmission Output:	
Type. teeth, ratio	Spur gear, 34/32, 1.063
Middle gear case	
Type. teeth, ratio	Bevel gear, 19/18, 1.056
Final gear case	
Type, teeth, ratio	Bevel gear. 32/11,2.909
Chassis:	
Frame	Tubular steel double cradle
Suspension:	
Front (type, travel)	Telescopicfork, 175 mm (6.9 in)
Rear (type, travel)	Swing arm,80 mm (3.2 in)
Tires:	
Front	3.25 H 19-4PR Bridgestone
Rear	4.00 H 18-4PR Bridgestone
Brakes:	
Front	Dual hydraulic disc
Rear	Single hydraulicdisc
Fuel tank	17.0 lit (4.5 USgal) leaded or unleaded
Wheels:	
Front	1.85 x 19 Cast Aluminum
Rear	2.15 x 18 Cast Aluminum

B. MAINTENANCE SPECIFICATIONS

1. Engine	
Engine/Transmission oil capacity	
Total amount	3,800 cc (4.0 US qt)
Oil and filter change	3,500 cc (3.7 US qt)
Oil change	3,000 cc (3.2 US qt)
2. Carburetion	
Manufacturer: Mikuni	Float level: 26.5 ± 2.5mm (from gasket surface)
Model, I.D.No.: BS34.1J701	Pilot screw: 2-1/4 turns
Main jet: No. 145	Air jet, Main: 1.0 mm
Needle jet: Y-2	Air jet, Pilot: 1.6 mm
Pilot jet: No. 17.5	Throttle valve, No. 140
Starter jet: No. 25	Inlet valve size: 2.0 mm
Jet needlelclip position: 4H	Engine idle speed: 1,050 - 1,150 rpm
Brakes	
Recommended fluid	DOT No.3
Minimum boiling point	240°C (464°F)
Pad thickness wear limit	6.0 mm (0.24 in)
Brake disc maximum deflection	0.15 mm (0.006 in)
Brake disc minimum thickness	6.5 mm (0.26 in)
Front brake freeplay (end of lever)	5 — 8mm (0.2— 0.3 in)
Rear brake freeplay (end of pedal)	10 mm (0.40 in)
Front forks	
Spring free length	503.2 mm (19.81 in)
Spring preload length	473.2 mm (18.63 in)
Spring rate (0~100 mm travel)	0.5 kg/mm (28 lb/in)
(100~175 mm travel)	0.648 kg/mm (36.3 lb/in)
Fork oil capacity (each side)	200 cc (6.76 US fl.oz.)
Rear shock absorbers	
Spring free length	256 mm (10.08 in)
Spring preload length	228 mm (9.0 in)
Spring rate (0~45 mm travel)	1.9 kg/mm (106 lb/in)
(45~80 mm travel)	2.52 kg/mm 1141.1 lb/in)
4. Electrical	
Ignition timing retarded	10°@1.100 rpm
advanced	28.5°±1.5°@3.050±150rpm
advance starts	1,800±100 rpm
Spark plug cap resistance	4.25~6.0 K ohms
Regulator type	National RD1143
Regulated voltage	14.5±0.3V
Lighting	
Headlight	Sealed beam 12V, 50/40W
Taillight/stoplight	12V. 8/27W (two bulbs)
Flasher light	12V. 27W (four bulbs)
Flasher pilot light	12V. 3.4W (two bulbs)
Meter lights	12V. 3.4W (two bulbs)
High beam indicator light	12v. 3.4W
Oil pressure warning light	12v. 3.4w
Neutral light	12v. 3.4w

Valve Timing (XS750D, XS750-2D)

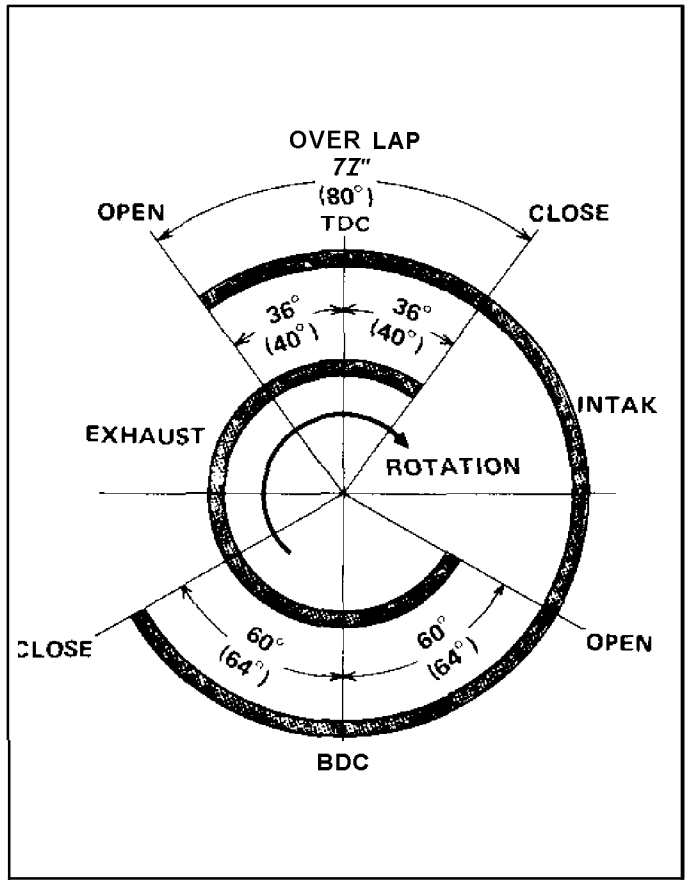

Specifications in parentheses ( ) are for XS 750-2D. Specifications without parentheses are for XS750D.

	Open	Close	Over Lap
Intake	36° (40°) BTDC	60° (64°) ABDC	72° (80°)
Exhaust	60° (**64°**) BBDC	36° (40°) ATDC	

Page numbers shown in brackets correspond to page numbers of the XS750D Service Manual.

(PAGE 19 - 20)

A. Maintenance Intervals For New Machines (XS750D, XS750-2D)

Initial 400Km (250miles): Cam chain adjustment Spark plug inspection Wheel, tire inspection Fuel petcock cleaning Battery maintenance Lights, signals check Fittings, fasteners tightening Brake system inspection Initial 800km (500miles): Carburetor adjustment Brake system inspection Wheel, tire inspection Battery maintenance Ignition timing check Lights, signals check Fittings, fasteners tightening Clutch adjustment Steering head adjustment	Initial 1,600km (1,000miles): Air filter cleaning Brake system inspection Wheel, tire inspection Fuel petcock cleaning Battery maintenance Lights. signals check Fittings, fasteners tightening Initial 3.200km(2,000miles): Clutch adjustment Cylinder cornpression check Valve clearance check Cylinder head torque check Cam chain adjustment (4,800km or 3,000miles) Spark plugs inspection and cleaning Carburetor adjustment Brake system inspection Wheel, tire inspection Battery maintenance Ignition timing adjustment Lights, signals check Fittings, fasteners tightening

B. Routine Maintenance intervals (XS750D, XS750-2D)

Every 1,600km (1,000miles): Air filter cleaning Brake system inspection Wheel, tire inspection Battery maintenance Lights, signals check Fittings, fasteners tightening Every 3,200km (2,000miles): Spark plug inspection Carburetor adjustment Fuel petcock cleaning Ignition timing check and adjustment Clutch adjustment	Every 6,400km (4,000miles): Cylinder compression check Valve clearance check and adjustment (9,600km or 6,000miles) Cylinder head torque check Cam chain adjustment (4,800km or 3,000miles) Steering head adjustment Swing arm bearing adjustment

C. Lubrication Intervals For New Machines (XS750D, XS750-2D)

Initial 400km (250miles): Replace engine/transmission oil Replace oil filter Replace middle/final(rear)gear oil Lubricate throttle griplhousing Check brake fluid Initial 800km (500miles): Check brake fluid Initial 1,600km (1,000miles) Check brake fluid	Initial 3,200km (2,000miles): Replace engine/transmission oil (2,400km or 1,500miles) Lubricate control/meter cables Lubricate throttle grip/housing Check brake fluid Replace front fork oil Replace oil filter (4,800km or 3,000miles) Replace steering bearing grease Lubricate speedometer gear housing

D. Routine Lubrication Intervals (XS750D, XS750-2D)

Every 1,600km (1,000miles): Check brake fluid Every 3,200km (2,000miles): Lubricate control/meter cables Lubricate point cam lubrication wicks Every 4,800km (3,000miles): Replace engine/transmission oil Every 6,400km (4,000miles): Lubricate throttle grip/housing Replace front fork oil Lubricate speedometer gear housing	Every 9,600km (6,000miles): Replace oil filter Replace middle/final (rear) gear oil Every 12,800km (8,000miles): Replace steering bearing grease Replace rear arm pivot bearing grease Replace wheel bearing grease

NOTE:

Brake fluid replacement:

1. When disassembling the master cylinder or caliper cylinder, replace and bleed the air from the brake fluid. Normally check the brake fluid level and add the fluid as required.
2. Replace the master cylinder and caliper cylinder internal seals every two years.
3. Replace the brake hoses every four years, or if cracked or damaged.

E. Recommended Lubricants (XS750D, XS750-2D)

Middle/Final (rear) gear	3. SAE 80, API "GL-4" Hypoid gear oil, for use below 15°C (41°F)

Torque Specifications

Engine:		
Spark plug	2.0 m-kg	(14 ft-lb)
Cam cap nut	0.9 m-kg	(7 ft-lb)
Rod cap	3.8 m-kg	(27 ft-lb)
Starter clutch bolt	3.0 m-kg	(22 ft-lb)
Shift cam locating bolt	1.7 m-kg	(12 ft-lb)
Detent assembly	4.3 m-kg	(31 ft-lb)
Transmission bearing caps	2.0 m-kg	(14 ft-lb)
Crankshaft bolts 8 mm	2.0 m-kg	(14 ft-lb)
10 mm	3.7 m-kg	(27 ft-lb)
Clutch holding nut	12.0 m-kg	(87 ft-lb)
Clutch spring screws	0.9 m-kg	(7 ft-lb)
Middle gear case mounting screws	2.3 m-kg	(17 ft-lb)
Rotor holding bolt	3.5 m-kg	(25 ft-lb)
Bearing housing bolt	2.2 m-kg	(16 ft-lb)
Oil pipe union bolt	2.1 m-kg	(15 ft-lb)
Oil pump drive gear nut	10.0 m-kg	(72 ft-lb)
Crankshaft turning nut	2.3 m-kg	(17 ft-lb)
Cylinder head 8 mm	2.0 m-kg	(14 ft-lb)
10 mm	3.5 m-kg	(25 ft-lb)
Cylinder holding nuts	2.0 m-kg	(14 ft-lb)
Camshaft cap nuts	1.0 m-kg	(7 ft-lb)
Engine mounting bolts 10 mm	5.5 m-kg	(40 ft-lb)
12 mm	9.5 m-kg	(69 ft-lb)
Engine oil drain plug	4.3 m-kg	(31 ft-lb)
Oil filter mounting bolt	3.2 m-kg	(23 ft-lb)
Middle gear drain plug	4.3 m-kg	(31 ft-lb)
Final gear assembly mounting nuts	4.0 m-kg	(29 ft-lb)
Chassis		
Front axle nut	10.7 m-kg	(77 ft-lb)
Front axle holder nuts	2.0 m-kg	(14 ft-lb)
Rear axle nut	15.0 m-kg	(108 ft-lb)
Rear axle pinch bolt	0.6 m-kg	(4 ft-lb)
Rear shock absorber (Top)	3.5 m-kg	(25 ft-lb)
(Bottom)	4.0 m-kg	(29 ft-lb)
Brakes		
Caliper support bolt	1.8 m-kg	(13 ft-lb)
Caliper mounting bolt	3.5 m-kg	(25 ft-lb)
Brake hose union bolt	2.6 m-kg	(19 ft-lb)
Disc mounting bolt	2.0 m-kg	(14 ft-lb)
Front fork pinch bolt	1.8 m-kg	(13 ft-lb)
Steering stem top bolt	8.6 m-kg	(62 ft-lb)
Swing arm pivot lock nut	10.0 m-kg	(72 ft-lb)
Rear shock absorber nut	3.0 m-kg	(22 ft-lb)

(PAGE 24)

C. Engine/Transmission oil (XS750-2D)

2. Engine/Transmission oil and oil filter replacement.

g. Add oil through the dip stick hole. Specifications should be changed as follows:

Oil quantity:	Periodic Oil Change
	3.0 liter (3.3 US qt)
	With oil filter change
	3.5 liter (3.7 US qt)

(PAGE 25)

D. Middle Gear/Final Gear Oil (XS750D, XS750-2D)

2. Gear oil replacement

d. Fill the gear case(s) up to specified level. Specifications should be changed as follows:

Oil Capacity:	
Middle gear case:	375cc(12.7 U.S. fl oz)
Final gear case:	300cc(10.0 U.S. fl oz)

(PAGE 26)

F. Cam Chain Adjustment (XS750-2D)

The cam chain tensioner stopper bolt is located on the right (inboard) side of the tensioner boss.

(PAGE 28)

H. Compression Pressure Measurement (XS 750D, XS750-2D)

Procedure 5.

Specifications should be changed as follows:

Compression pressure:	(at sea level)	
Standard:	10 kg/cm²	(142 psi)
Minimum:	9 kg/cm²	(128 psi)
Maximum:	11 kg/cm²	(156 psi)

(PAGE 30)

C. Front And Rear Brake (XS750D, XS 750-2D)

1. Brake adjustment

a. Front brake lever free play

The front brake lever should be so adjusted that it has a free play 5 ~ 8mm (0.2 ~ 0.3 in) at the lever end.

1) Loosen the locknut on the brake lever.

2) Turn the adjustor so that the brake lever movement at the lever end is 5 ~ 8 mm (0.2 ~ 0.3 in) before the adjustor contacts the master cylinder piston.

3) After adjusting, tighten the locknut.

NOTE:

Check for correct play and make it is working properly.

Free play: 5 ~ 8 mm (0.2 ~ 0.3 in)

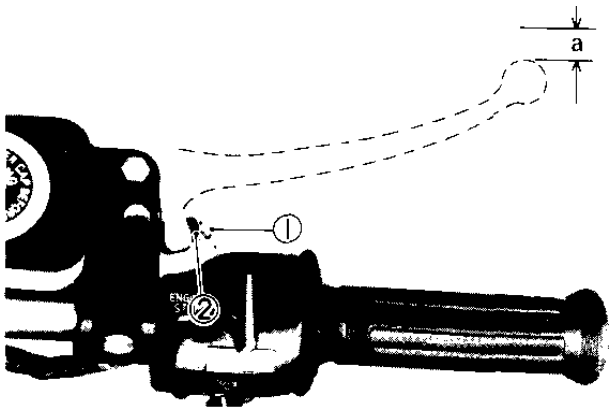

1. Adjustor 2. Locknut

a. 5 ~ 8 mm (.02 ~ 0.3in)

b. Rear brake pedal free play

CAUTION:

Proper pedal free play is essential to avoid excessive brake drag.

1) Loosen the adjustor locknut (for pedal height).

2) By turning the adjustor bolt clockwise or counterclockwise, adjust the brake pedal position as shown in the illustration.

3) Secure the adjustor locknut.

4) Loosen the brake rod adjustor locknut.

5) Turn in the brake rod until it lightly touches the master cylinder, then turn it out by approx. 1-½ ~ 1-¾ turns.

NOTE:

See that the punched mark on the brake rod is not above the top surface of the adjustor locknut in securing the brake rod adjustor locknut.

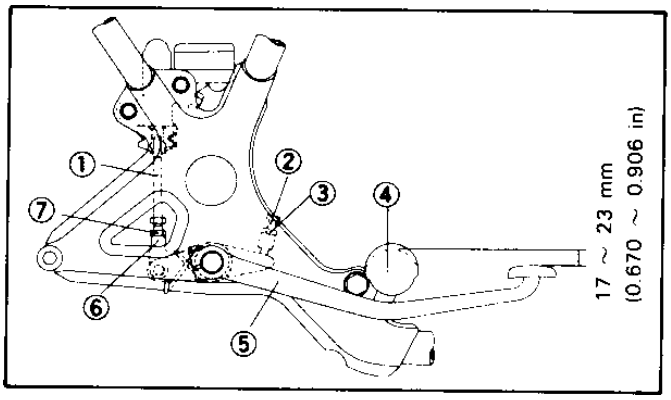

1. Brake rod
2. Adjustor bolt (for pedal height)
3. Locknut
4. Footrest
5. Brake pedal
6. Joint
7. Locknut

(PAGE 68)

XS750D, XS750-2D

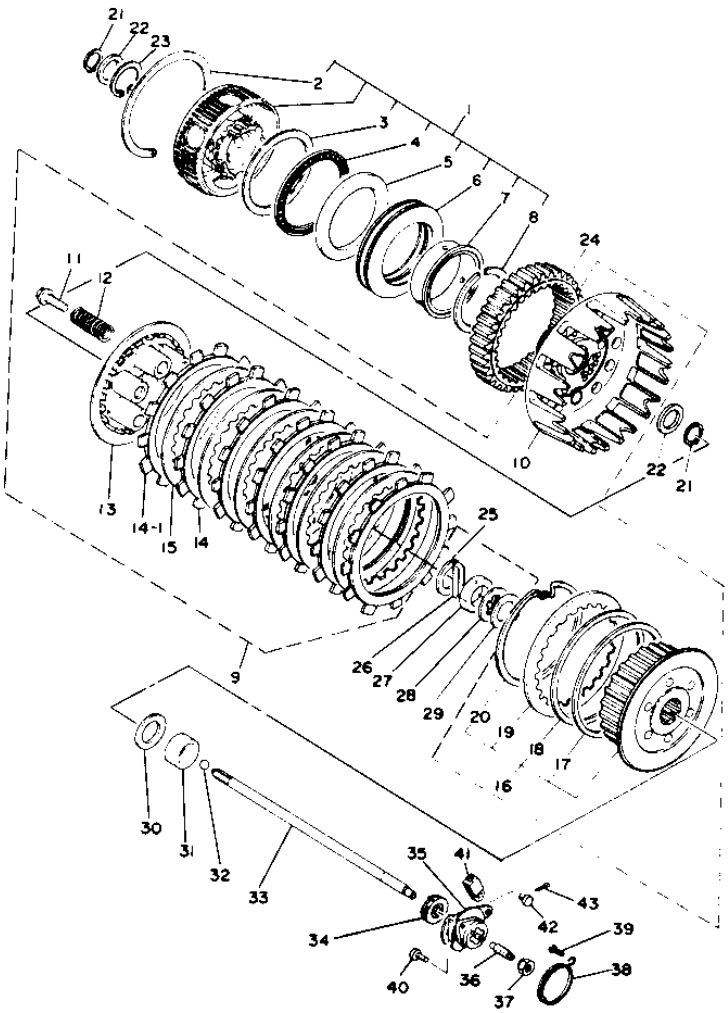

1 Damper assembly
2. Circlip
3 Plate washer (76-95-0.8)
4. Bearing
5. Plate washer (69-95-5.4)
6. Damper spring
7. Collar
8. Circlip
9. Clutch assembly
10. Clutch housing complete
11. Screw
12. Compression spring
13. Pressure plate
14. Friction plate
14-1. Friction plate (cork lining)
15. Clutch plate 1
16. Clutch boss assembly
17. Seat plate
18. Clutch boss spring
19. Clutch plate 2
20. Circlip
21. Circlip (S-20)
22. Plate washer (21.2-29.2)
23. Circlip
24. Primary driven gear (45T)
25. Plate washer (22-36-2.6)
26. Push rod 1
27. Hexagon nut
28. Lock washer
29. Conical spring washer
30. Plate washer (25.2-39-1.0)
31. Spacer
32. Ball (5/16 inch)
33. Push rod
34. Oil seal (SD-8-25.8)
35. Ball screw assembly
36. Adjusting screw
37. Adjusting nut
38. Torsion spring
39. Spring hook
40. Pan head screw
41. Joint
42. Pin
43. Cotter pin

(PAGE 86~90)

5-3. BRAKES (XS750D, XS750-2D)

The shim in the caliper is no longer used, and a set of two pad springs has been changed into a one piece type.

(PAGE 37)

C. Muffler, Footrest, Brake Pedal (XS750-2D Only)

The muffler has been changed from 3 into 1 to 3 into 2.

(PAGE 69)

G. Clutch and Primary Drive **(XS750D, XS750-2D)**

1. Install clutch spacer, plate washer, and clutch boss. Install the spring washer, lock washer and locknut. Use the clutch holding tool and special 32mm deep socket (special tool) to tighten the clutch nut.

NOTE:

Bend over locking tab after locknut is tightened.

Clutch nut torque: 12.0 m-kg (87 ft-lb)

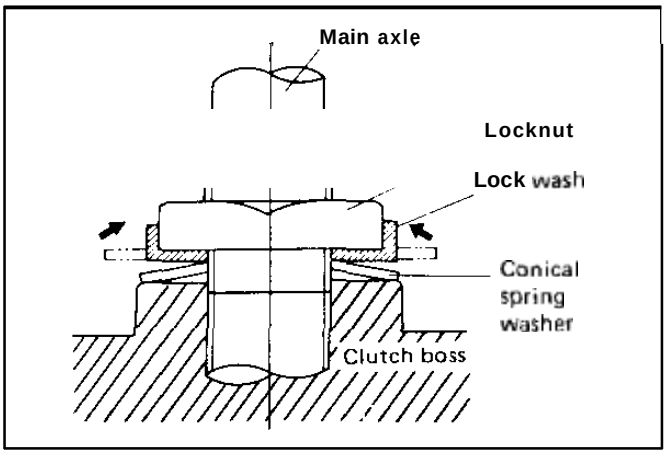

2. Install a clutch friction plate, then a steel clutch plate. Install clutch friction plates and steel plates alternately.

NOTE:

Each steel clutch plate has a tab. There is a dot on the clutch boss to correspond to each tab. Install a clutch plate tab next to one dot. Position the next steel plate next to the next dot on the clutch boss. Follow this pattern clockwise around the clutch boss until all friction and steel clutch plates are installed. In this case, the friction plate with cork lining should be installed on the extreme outside.

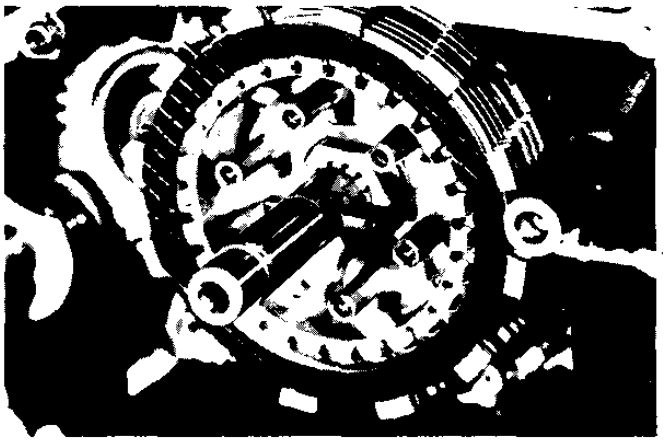

(PAGE 73)

N. Piston and Cylinder **(XS750D. XS750-2D)**

4. Position piston rings as shown.

NOTE:

1) Make sure ends of oil ring expanders are not overlapped.
2) Manufacturer's marks or numbers stamped on the rings are on the top side of the rings. Coat pistons and rings well with oil.

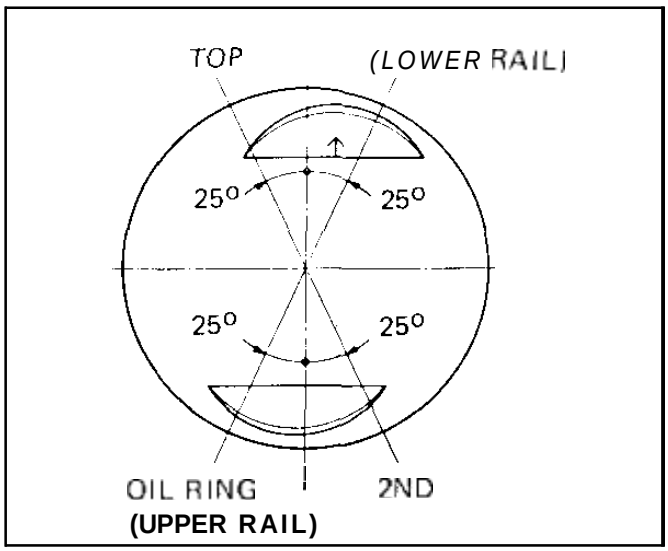

5. Install the cylinder. A ring compressor is usually not necessary.

(PAGE 74)

P. Camshaft installation

Delete the following sentences.

NOTE:

Manufacturer's marks or numbers stamped on the rings are on the top side of the rings. Coat pistons and rings well with oil.

5. Install the cylinder. A ring compressor is usually not necessary.

3-6. TIMING PLATE SETTING (XS750D, XS750-2D)

A. Timing plate setting

Adjustments required when the following parts are replaced; crankcase, crankcase cover (left side) governor assembly and/or crankshaft.

1. Install the governor and breaker plate assembly on the crankcase cover (left side).
2. Install the dial gauge in the spark plug hole in the left cylinder (No.1 cylinder).
   The dial gauge stand (special tool) is required.
3. By turning the crankshaft counter-clockwise slowly, locate T.D.C. on the power stroke in the left cylinder (No. 1 cylinder).
4. Align the timing plate tip with the "T" mark on the governor for the left cylinder (No. 1 cylinder). Lock the timing plate setting screw with paint.
5. For the subsequent operations, follow the procedure described "2-5. C. Ignition Timing".

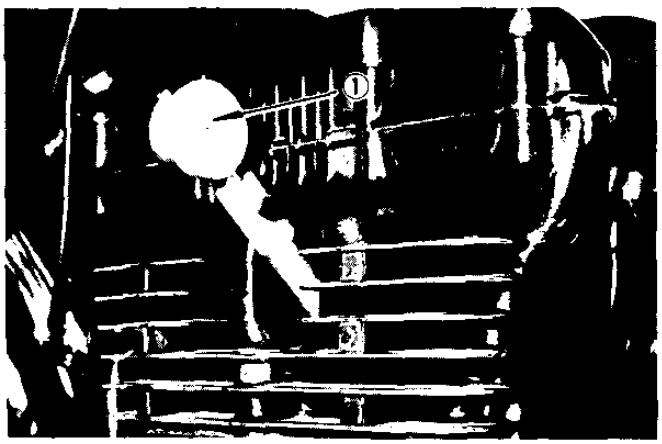

1. Dial gauge

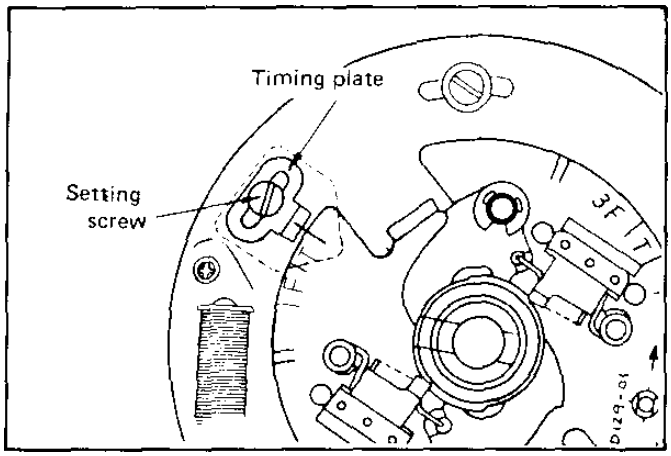

(PAGE 78)

4-1. CARBURETOR (XS750-2D)

B. Specifications

Specification should be changed as follow:

Starter jet: #25

(PAGE 82)

5-2. REAR WHEEL (XS750-2D Only)

A. Removal

1. Place machine on side stand and remove left rear shock absorber.

   NOTE:
   When reinstalling rear shock absorber, tighten to following torque:

Top mount:	3.5 m-kg (25 ft-lb)
Bottom mount:	4.0 m-kg (29 ft-lb)

2. Hook one end of the wire tool to the hook attached to the frame.
3. Apply your weight to the rear part of the seat, and contract the rear shock absorber by pulling up the right side of the swing arm with your hand, then connect the free end *of* the wire tool to the swing arm as shown.
4. With the wire tool in this position, pull machine onto center stand.

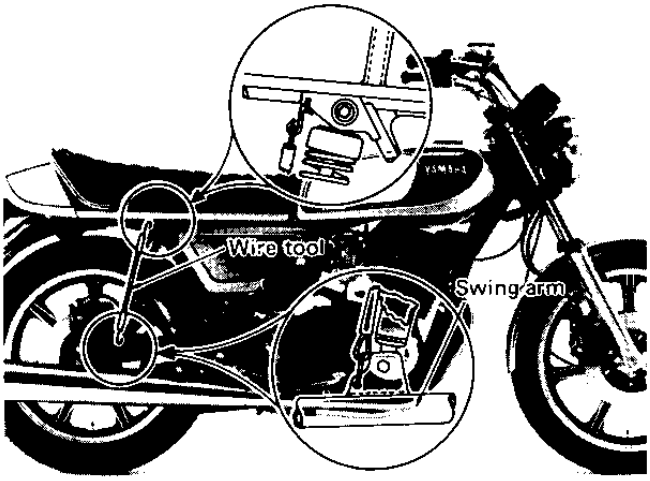

5. Raise the seat and unscrew the rear fender installation bolts until their threaded portion is completely out. Reinsert those bolts as stoppers while holding the rear fender.

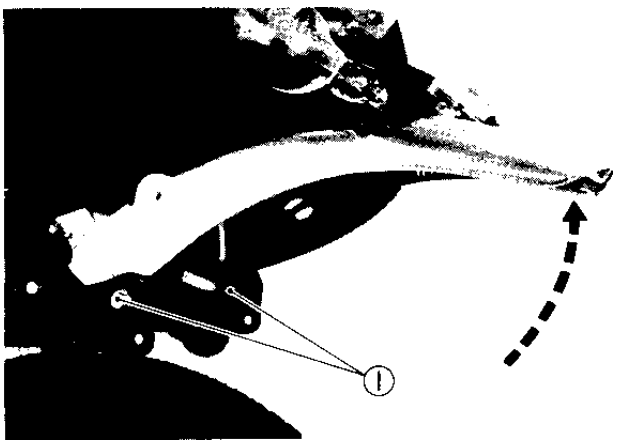

1. **Installation** bolts

6. Remove the axle nut cotter pin and the axle nut.

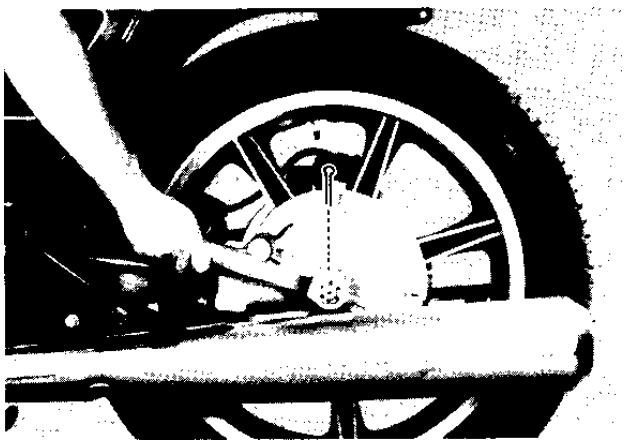

7. Loosen the rear axle pinch bolt.

8. While supporting the brake caliper, pull out the rear axle.

9. Hold up the brake caliper assembly and place it on the hook of the rear arm.

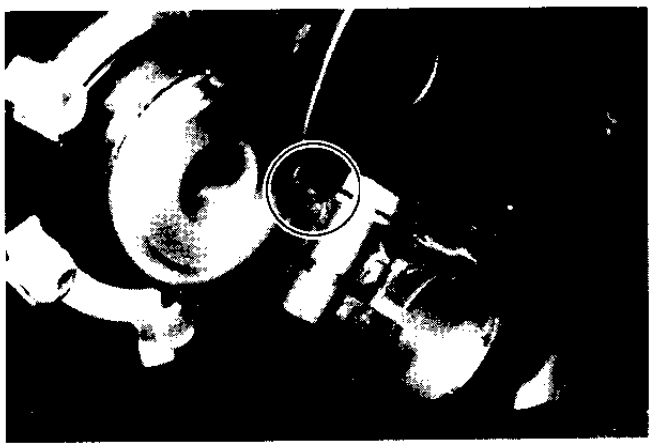

10. Move the wheel to the right side to separate it from the final gear case and remove the rear wheel.

NOTE:

Do not depress the brake pedal when the wheel is off the machine so that the caliper piston is not forced out of the cylinder.

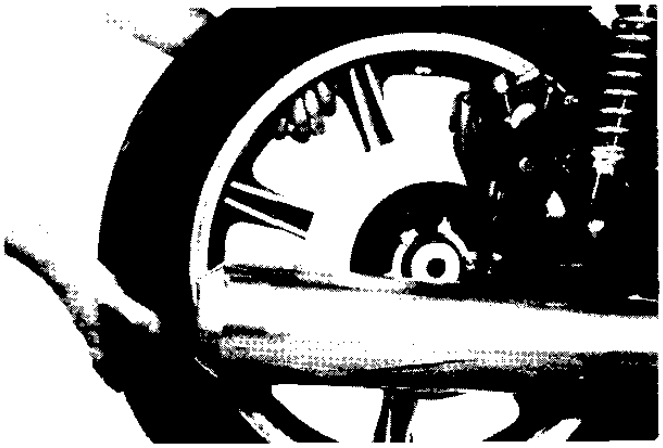

11. To install the rear wheel, reverse the removal procedure.

NOTE:

When installing the rear wheel, be sure the splines on the wheel hub fit into the final gear case. Make sure there is an enough gap between the disc pads for the brake disc.

CAUTION:

Always use a new cotter pin when re-assembling rear axle nut.

Tightening torque:		
Axle nut:	15.0 m-kg	(108 ft-lb)
Axle pinch bolt:	0.60 m-kg	(4 ft-lb)

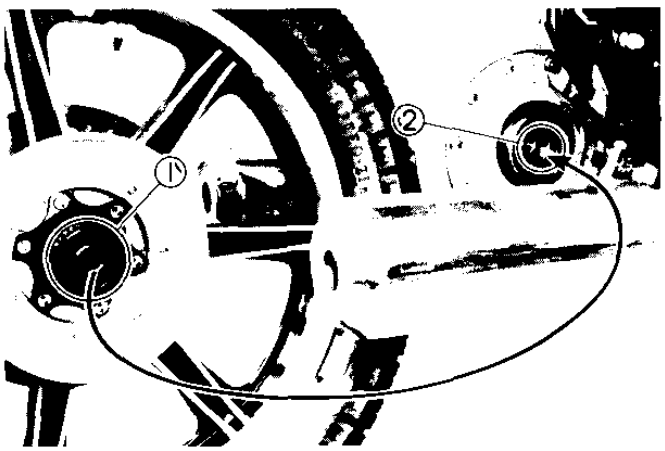

1 **Rear wheel hub splines** 2. Final gear case splines

6-2. CHARGING SYSTEM (XS750-2D Only)

A. Charging Circuit Diagram

NOTE:

Rectifier is combined with the Voltage Regulator in the same housing.

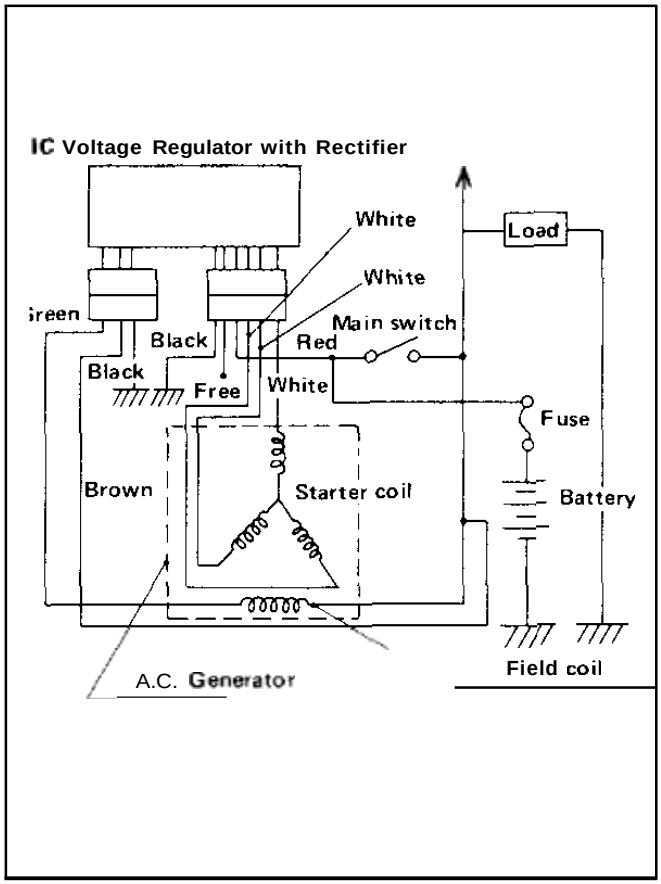

(PAGE 137)

C. Voltage Regulator (XS750-2D Only)

The regulator has been changed from a mechanical-point type to an IC(Integrated Circuit) type. The IC Voltage Regulator is a small and normally very reliable component. Due to its construction, it is lightweight and free from the wear and misadjustment associated with mechanical voltage regulators. If the following inspection reveals that the regulator is faulty, it cannot be adjusted and must be replaced.

Checking IC Voltage Regulator

1. Measure the specific gravity of the battery fluid. If it is less than 1.26, remove the battery and recharge until it is more than 1.26.
2. Remove the left hand side cover.
3. Check the battery terminals and couplers for looseness.
4. Connect two Yamaha pocket testers to the regulator coupler as illustrated.

CAUTION:

Beware of short-circuiting when connecting tester lead wires to the coupler.

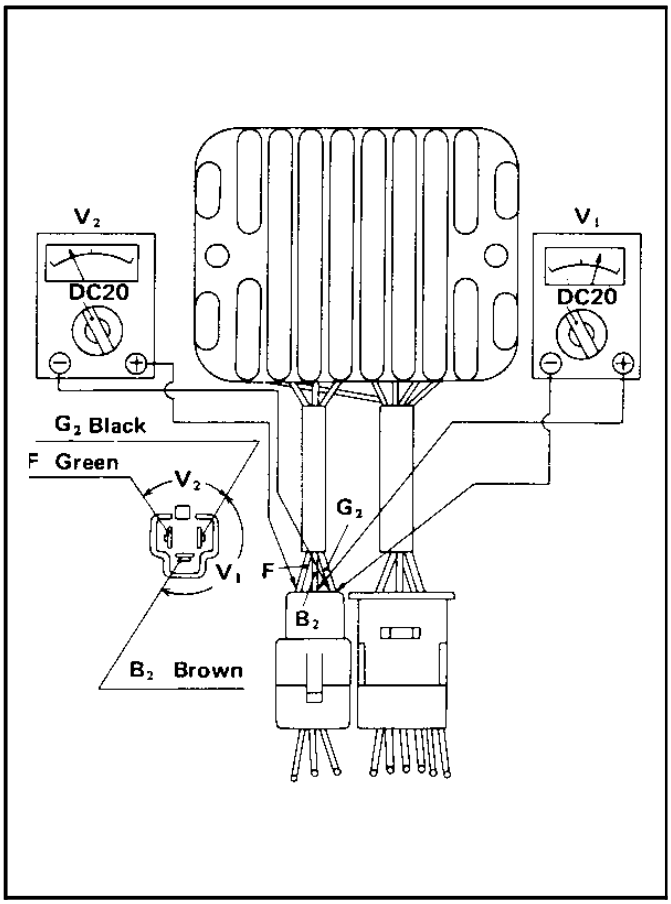

5. Turn the main switch on. Make sure that V 2is less than1.8V.

NOTE:
Do not turn on lights or signals.

6. Make sure that V2 gradually increases up to 9 ~ 11V when the engine is started and its revolutions go up.
7. Make sure that V1 keeps the level of 14.2 ~ 14.8V even when engine revolutions increase.

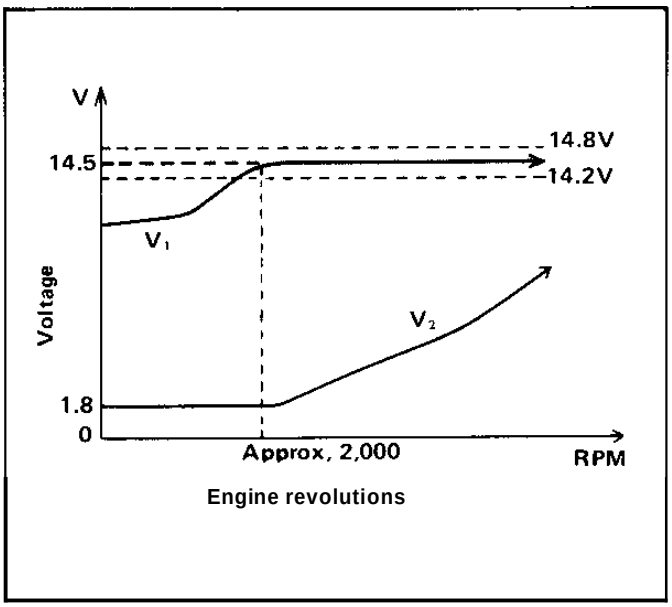

8. If these levels are not maintained, the regulator is defective and must be replaced.

Checking Silicon Rectifier

1. Check silicon rectifier as specified using Yamaha pocket tester.

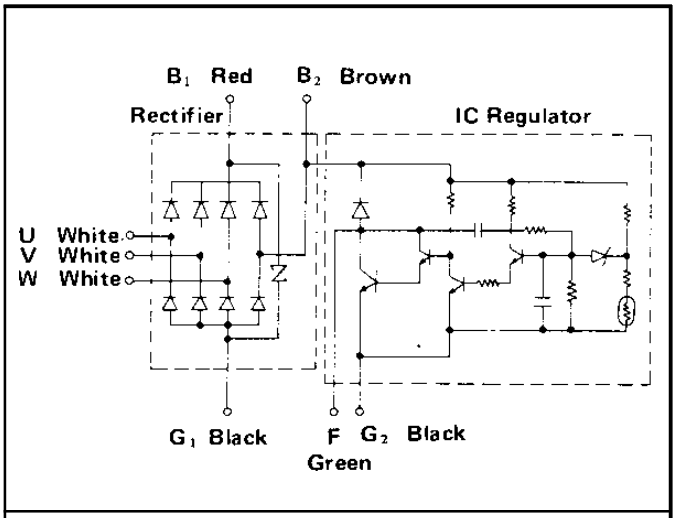

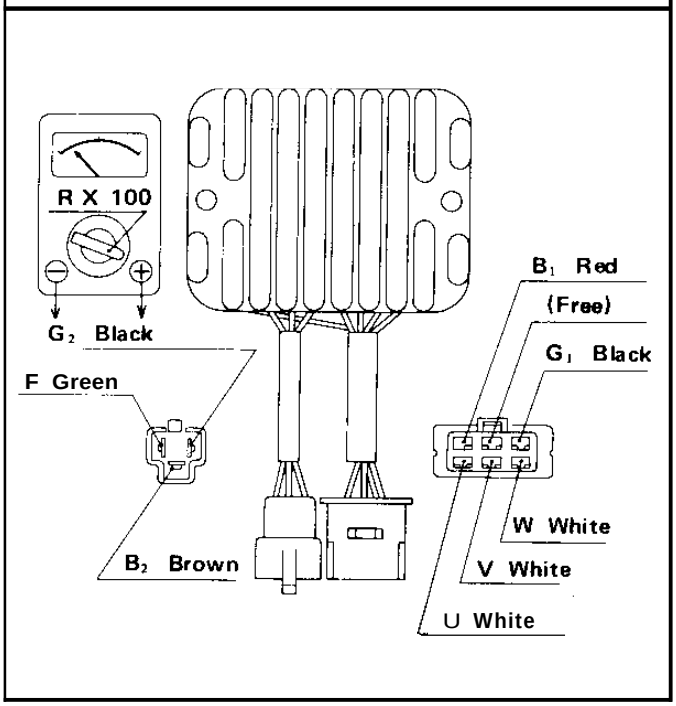

Checking element	Pocket tester connecting point		Good	Replace [element shorted]	Replace [element opened]
	(+)Red	(-)Black			
D_1	B_1	U	O	O	X
	U	01	X	O	X
D_2	B_1	V	O	O	X
	V	B_1	X	O	X
D_3	B_1	W	O	O	X
	W	B_1	X	O	X

D_4	B_1 B_2	B_2 B_1	O X	O O	X X
D_5	U G_1	G_1 U	O X	O O	X X
D_6	V G_1	G_1 V	O X	O O	X X
D_7	W G_1	G_1 W	O X	O O	X X
D_8	B_2 G_1	G_1 B_2	O X	O O	X X

O: Continuity X: Discontinuity (∞)

Even of one of elements is broken, replace assembly.

CAUTION:

The silicon rectifier can be damaged if subject to overcharging. Special care should be taken to avoid a short circuit and/or incorrect connection of the positive and negative leads at the battery. Never connect the rectifier directly to the battery to make a continuity check.

XS750-2D Circuit Diagram

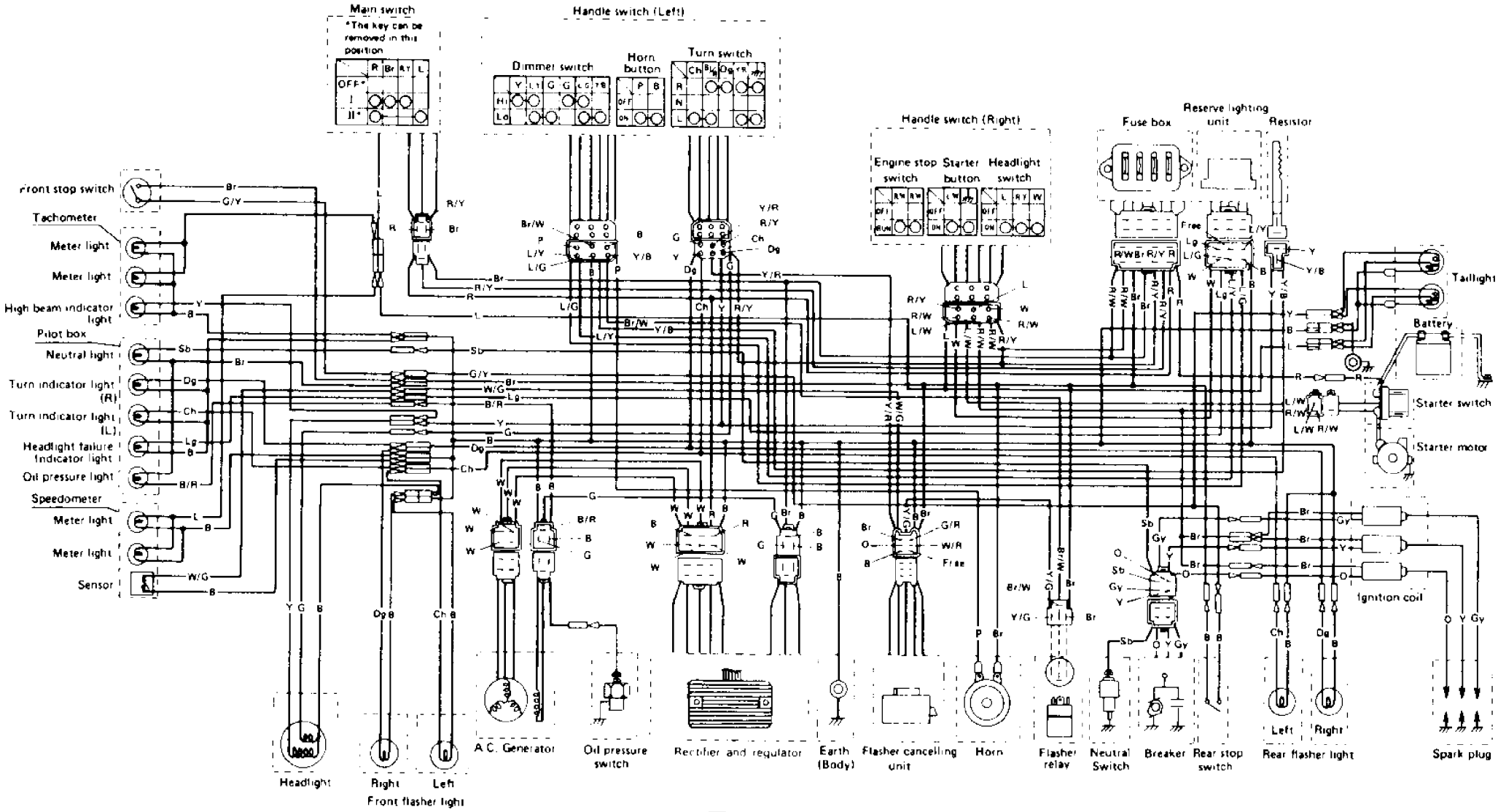

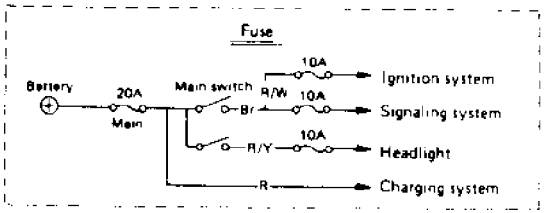

COLOR CODE

Br	Brown	L	Blue	Y/B	Yellow/Black
R	Red	Gy	Gray	Br/W	Brown/White
W	White	O	Orange	Y/G	Yellow/Green
Lg	Light Green	R/W	Red/White	W/G	White/Green
B	Black	L/W	Blue/White	Y/R	Yellow/Red
Y	Yellow	R/L	Red/Blue	W/R	White/Red
Dg	Dark Green	L/Y	Blue/Yellow	G/R	Green/Red
Ch	Chocolate	L/G	Blue/Green		