Owner's manual

E

DUCATI ST4s ABS

E

Hearty welcome among Ducati fans! Please accept our best compliments for choosing a Ducati motorcycle. We think you will ride your Ducati motorcycle for long journeys as well as short daily trips. Ducati Motor Holding S.p.A. wishes you smooth and enjoyable riding.
We are steadily doing our best to improve our "Technical Assistance" service. For this reason, we recommend you to strictly follow the indications given in this manual, especially for motorcycle running-in. In this way, your Ducati motorbike will surely give you unforgettable emotions. For any servicing or suggestions you might need, please contact our authorized service centers.

Enjoy your ride!

Note
Ducati Motor Holding S.p.A. declines any liability whatsoever for any mistakes incurred in drawing up this manual. The information contained herein is valid at the time of going to print. Ducati Motor Holding S.p.A. reserves the right to make any changes required by the future development of the above-mentioned products.

E

For your safety, as well as to preserve the warranty, reliability and worth of your motorcycle, use original Ducati spare parts only.

Warning
This manual forms an integral part of the motorcycle and - if the motorcycle is resold - must always be handed over to the new owner.

TABLE OF CONTENTS

E

General 6
Warranty 6
Symbols 6
Useful information for safe riding 7
Carrying the maximum load allowed 8
Identification data 10

Controls 11
Position of motorcycle controls 11
Instrument panel 12
Digital display 14
The immobilizer system 15
Keys 15
Code card 16
Operation 17
Duplicate keys 17
Key-operated ignition switch and steering lock 18
Left switch 19
Clutch lever 20
Cold start lever 21
Right switch 22
Throttle twistgrip 23
Front brake lever 23
Rear brake pedal 24
Gear change pedal 24
Setting the gear change and rear brake pedals 25

Main components and devices 27
Location 27
Tank filler plug 28
Seat catch and helmet hooks 29
Side stand 30
Lifting handgrip 31
Power outlet 31
Centre stand 32
Rear view mirrors 33
Front fork adjusters 34
Shock absorber adjusters 36

Directions for use 38
Running-in recommendations 38
Pre-ride checks 40
Starting the engine 41
Moving off 44
Braking 44
ABS system 44
Stopping the motorcycle 46
Parking 46
Refueling 47
Tool kit and accessories 48

Main maintenance operations 49
Removing the fairing 49
Side panniers 52

Lifting the fuel tank 53
Cleaning and changing air filters 54
Checking the coolant level 55
Checking brake and clutch fluid level 56
Checking brake pads for wear 57
Lubricating cables and joints 58
Throttle cable adjustment 59
Charging the battery 60
Chain tensioning 61
Chain lubrication 62
Replacing bulbs 62
Beam setting 68
Tyres 70
Checking engine oil level 72
Cleaning and replacing the spark plugs 73
Cleaning the motorcycle 74
Storing the bike away 75
Important notes 75

Technical data 76
Overall dimensions 76
Weights 76
Top-ups 77
Engine 78
Timing system 78
Performance data 79
Spark plugs 79
Frame 79
Wheels 79
Tyres 79
Brakes 80
Transmission 81
Suspensions 82
Exhaust system 82
Available colours 82
Electric system 82

For United States of America version Only 87

Routine maintenance record 96

E

E

Warranty

In your own interest, and in order to guarantee product reliability, you are strongly advised to refer to our authorized Dealers and workshops for any servicing requiring particular technical expertise. Our highly skilled staff have access to the implements required to perform any servicing job at best, and use Ducati original spare parts only as the best guarantee for full interchangeability, smooth running and long life.

All Ducati motorcycles come with a "Warranty Card". However, warranty does not apply to the motorcycles used in competitions or competitive trials. No motorcycle part may be tampered with, altered, or replaced with parts other than original Ducati spare parts during the warranty period, or the warranty right will be automatically invalidated.

Symbols

Ducati Motor Holding S.p.A. advises you to read this booklet carefully so as to become familiar with your motorcycle. In case of any doubts, please call a Ducati dealer or authorized workshop. The information contained herein will prove useful on your trips - and Ducati Motor Holding S.p.A. wishes you smooth, enjoyable riding - and will help you keep the performance of your motorcycle unchanged for a long time.
This manual contains some special remarks:

Warning
Failure to comply with these instructions may put you at risk and lead to severe injury or death.

Important
Possibility of damaging the motorcycle and/or its components.

Note
Additional information concerning the job being carried out.

*The terms **right** and **left** are referred to the motorcycle viewed from the riding position.*

Useful information for safe riding

Warning
Read this section before riding your motorcycle.

Accidents are frequently due to inexperience. Always make sure you have your licence with you when riding; you need a valid licence to be entitled to ride your motorcycle.
Do not lend your motorcycle to inexperienced riders or who do not hold a valid licence.
*Both rider and pillion passenger must **always** wear a safety helmet.*
Wear proper clothing, with no loose items or accessories that may become tangled in the controls or limit your zone of vision.
Never start or run the engine indoors. Exhaust gases are poisonous and may lead to loss of consciousness or even death within a short time.
Both rider and pillion passenger should keep their feet on the footpegs when the motorcycle is in motion.
***Always** hold the handlebars firmly with both hands so you will be ready for sudden changes of direction or in the road surface. The pillion passenger should **always** hold on to the suitable rear handgrip with both hands.*
Ride within the law and observe national and local rules.
***Always** respect speed limits where these are posted. However, **always** adjust your speed to the visibility, road and traffic conditions you are riding in.*
***Always** signal your intention to turn or pull to the next lane in good time using the suitable turn indicators.*
Be sure you are clearly visible and do not ride within the blind spot of vehicles ahead.
Be very careful when tackling road junctions, or when riding in the areas near exits from private grounds, car parks or on slip roads to access motorways.
***Always** turn off the engine when refueling.*
Be extremely careful not to spill fuel on the engine or on the exhaust pipe when refueling.
Do not smoke when refueling.
While refueling, you may inhale noxious fuel vapors.
Should any fuel drops be spilled on your skin or clothing, immediately wash with soap and water and change your clothing.
***Always** remove the key when you leave your motorcycle unattended.*
The engine, exhaust pipes, and mufflers stay hot for a long time.

Warning
The exhaust system might be hot, even after engine is switched off; pay particular attention not to touch exhaust system with any body part and do not park the vehicle next to inflammable material (wood, leaves etc.).

Park your motorcycle where no one is likely to hit it and use the side stand.
Never park on uneven or soft ground or your motorcycle may fall over.

E

E

Carrying the maximum load allowed

Your motorcycle is designed for long-distance riding, carrying the maximum load allowed in full safety and comfort.
Even weight distribution is critical to preserving these safety features and avoiding trouble when performing sudden manoeuvres or riding on bumpy roads.
When the side panniers are fitted, never exceed 130 Km/h.
Further reduce speed if tyres are worn down and when riding on poor road surface or with poor visibility.

Information about carrying capacity

The total weight of the motorcycle in running order including rider, pillion passenger, luggage and additional accessories should not exceed 420 Kg.
The weight of luggage alone should never exceed 23 Kg divided as follows (fig. 1):

max 9 kg for each side pannier;
max 5 kg for tank bag.

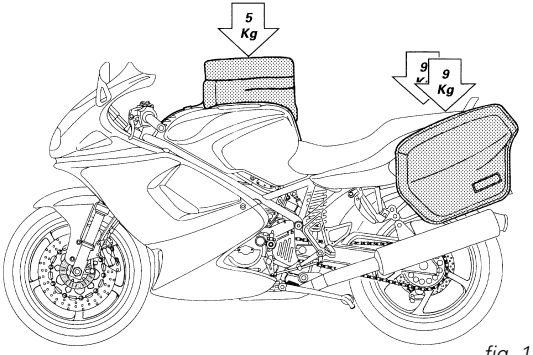

fig. 1

Try to arrange your luggage or heavy accessories in the lowest possible position and close to motorcycle centre.
Be sure to secure the luggage to the supports provided on the motorcycle as firmly as possible. Improperly secured luggage may affect stability.
Never fix bulky or heavy objects to the handlebar or to the front mud guard as this would affect stability and cause danger.
Do not insert any objects you may need to carry into the gaps of the frame as these may foul moving parts.
If you install the side panniers (available from Ducati Spare Parts Department):
sort luggage and accessories so to distribute weight evenly and then arrange them in the panniers so that they are well balanced; lock both side panniers using the suitable key lock.
Make sure the tyres are inflated to the proper pressure indicated at page 70 and that they are in good condition.

Identification data

All Ducati motorcycles have two identification numbers, for frame (fig. 2) and engine (fig. 3).

Frame number

Engine number

E

Note

These numbers identify the motorcycle model and should always be indicated when ordering spare parts.

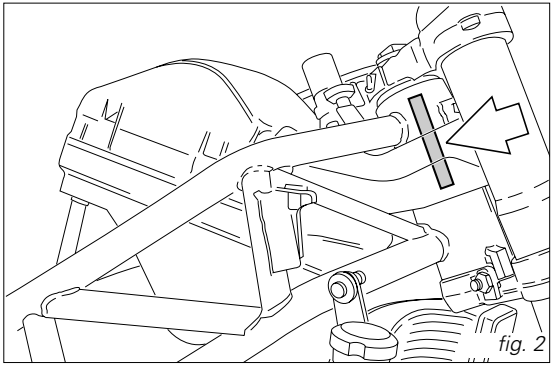

fig. 2

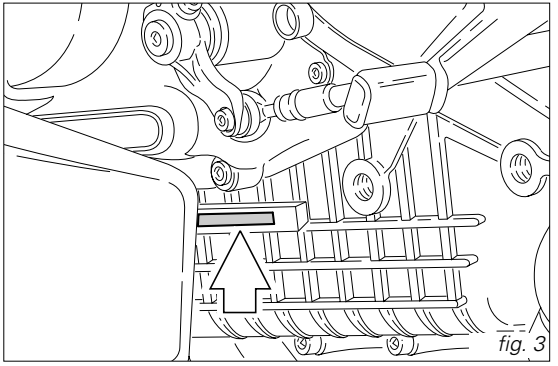

fig. 3

CONTROLS

Warning
This section details the position and function of all the controls you need to drive your motorcycle. Be sure to read this information carefully before you use the controls.

Position of motorcycle controls *(fig. 4)*

1) Instrument panel.
2) Key-operated ignition switch and steering lock.
3) Left switch.
4) Clutch lever.
5) Cold start lever.
6) Right switch.
7) Throttle twistgrip.
8) Front brake lever.
9) Gear change pedal.
10) Rear brake pedal.

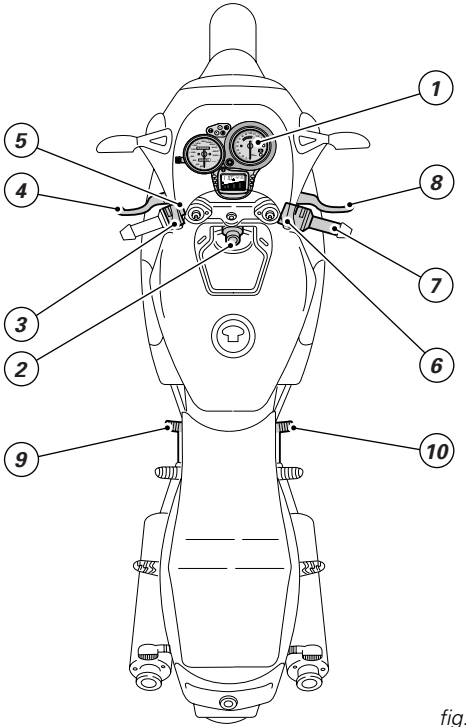

fig. 4

E

E

Instrument panel *(fig. 5)*
1) ***Speedometer*** *(km/h or mph).*
Gives road speed.
a) ***Odometer*** *(km or miles).*
Gives total distance covered.
b) ***Trip meter*** *(km or miles).*
Gives distance covered since last resetting.
c) Trip meter ***resetting knob****.*
Turn to reset trip meter to "0000".
2) ***Engine revolution meter*** *(rpm)*
Indicates engine rpm.
3) ***Neutral light N (green).***
Comes on when gearbox is in neutral.
4) ***Fuel warning light*** ***(yellow)****.*
Comes on when there are about 6 liters fuel left in the tank, corresponding to 1 bar of the digital display (8.1, fig.6).
5) ***Turn indicator light*** ***(green)****.*
Comes on and flashes when a turn indicator is on.
6) ***Engine oil pressure light*** ***(red)****.*
Comes on when engine oil pressure is too low. It briefly comes on when the ignition is switched to ***ON*** *and normally goes out a few seconds after engine starts.*
It may shortly come on when the engine is hot, however, it should go out as the engine revs up.

Important
If this light stays on, stop the engine or it may suffer severe damage.

7) ***High beam light*** ***(blue)****.*
Comes on when high beams are on.

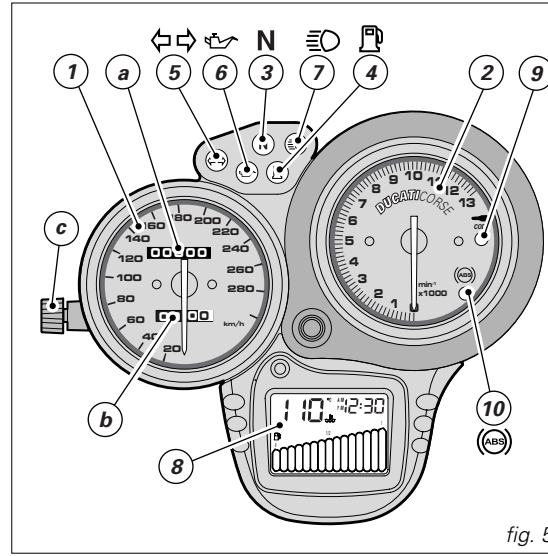

fig. 5

8) ***Digital display.***
Offers four functions (see page 14).
9) ***Orange light.***
Comes on and flashes when the motorcycle is stopped (Immobilizer on) it is also used for immobilizer diagnosis.

Note
When the Immobizer has been activated, this light keeps flashing for 24 hours and then goes out.The Immobilizer is still working.

10) ***Orange light (ABS).***
Turns on for a few seconds when the key is turned to ON (CHECK) and then goes out; ABS on.
Turns on and flashes when the ABS system has been turned off using the button incorporated in the LH switch (see page 19).

Important
When the ABS light stays on, it means the ABS is not working. This will not affect the operation of the regular braking system. However, contact a Dealer or Authorized Workshop. A possible cause is insufficient battery voltage and it is a good rule to charge the battery. Another possible cause is a fault in the system.

E

Digital display *(fig. 6)*
8.1) Fuel level indicator ⛽.
The fuel level in the tank is indicated by full bars. When there is only 1 full bar left on, it will start blinking while the fuel warning light (4, fig. 5) will come on.
8.2) Coolant temperature indicator 🌡.
Shows engine coolant temperature. When the engine is cold, the flashing message ***LO*** *is displayed.*
Engine temperature is displayed from 45 °C (113 °F) and over. If engine maximum temperature 120 °C (248 °F) is reached, the indicator will start blinking.

Important
Stop the engine if it reaches maximum temperature or it may suffer severe damage.

8.3) Clock
The first figure gives hours, the second one minutes.
8.4) Clock setting button
Press it briefly to increase minutes. Keep it pressed to speed up the process.

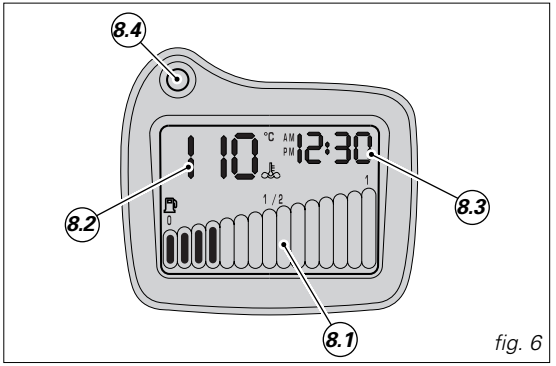

fig. 6

E

The immobilizer system

For improved anti-theft protection, the motorcycle is equipped with an IMMOBILIZER, an electronic system that inhibits engine operation whenever the ignition switch is turned off.
Accommodated in the handgrip of each ignition key is an electronic device that modulates an output signal. This signal is generated by a special antenna incorporated in the switch when the ignition is turned on and changes every time. The modulated signal acts as a "password" and tells the CPU that an "authorised" ignition key is being used to start up the engine. When the CPU recognises the signal, it enables engine start-up.

Note

The three keys have a small plate (1) attached that reports their identification number.

Warning

Keep the keys in different places. Store the plate (1) and the key A in a safe place.
It is also recommended to use always the same black key to start the bike.

E

Keys *(fig. 7)*
The Owner receives a set of keys comprising:
- 1 RED key A
- 2 BLACK keys B

The keys B are regular ignition keys and are used to:
- start up the engine
- open the lock of the fuel tank filler plug
- open the seat lock.

The key A performs the same functions as the keys B, and is also used to wipe off and re-program other black keys, if needed.

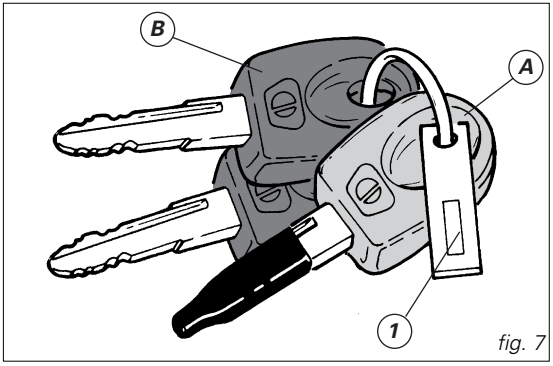

fig. 7

Code card

The keys come with a CODE CARD (fig. 8) that reports:

A) (fig. 9) the electronic code to be used to start the engine in the event of an emergency;

B) (fig. 9) the mechanical code for the keys to be reported to the DUCATI Service network when you are ordering any duplicate keys.

E

Warning

Keep the CODE CARD in a safe place. However, it is advisable to keep the electronic code printed on the CODE CARD handy when you ride your motorcycle, so you will be able to start the engine in the event of an emergency.

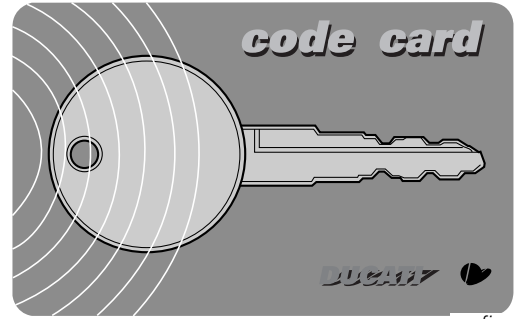

fig. 8

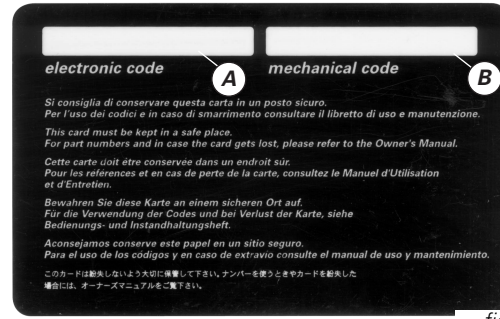

fig. 9

Operation

*When the ignition key is turned to **OFF**, the immobilizer inhibits engine operation.*
*When the ignition key is turned back to **ON** to start the engine, the following happens:*
*1) if the CPU recognised the code, the **CODE** light on the instrument panel will flash briefly. This means that the immobilizer system has recognised the key code and enabled engine ignition. When you press the **START** button, the engine will start up.*
*2) If the **CODE** light stays on, it means that the code has not been recognised. When this is the case, turn the ignition key back to **OFF** and then to **ON** again. If the engine still does not start, try with another black key.*
If the other key does not work out either, contact the DUCATI Service network.

Warning

The keys accommodate electronic components inside. If dropped or hit, they might damage.

Duplicate keys

If you need any duplicate keys, contact the DUCATI Service network with all the keys you have left and your CODE CARD.
DUCATI Service will program new keys and re-program your original keys, up to 8 keys in total.
You may be asked to identify yourself as the legitimate owner of the motorcycle. Be sure have any documents you might need to this end ready.
The codes of any keys not submitted will be wiped off from the memory to make those keys unserviceable in case they have been lost.

Note

If you sell your motorcycle, do not forget to give all keys and the CODE CARD to the new owner.

E

Key-operated ignition switch and steering lock

(fig. 10)
It is located in front of the fuel tank and has four positions:
*A) **ON**: lights and engine on;*
*B) **OFF**: lights and engine off;*
*C) **LOCK**: steering locked;*
*D) **P**: parking light and steering lock.*

E

Note

To move the key to the last two positions, press it down before turning it. Switching to (B), (C) and (D), you will be able to take the key out.

Warning

*This vehicle is equipped with an energy-saving CPU. If the key stays **ON** for a long period but the ignition button is not pressed within 15 seconds, the CPU will stop operating to avoid current absorption. Move the key to **OFF** and then to **ON** again.*

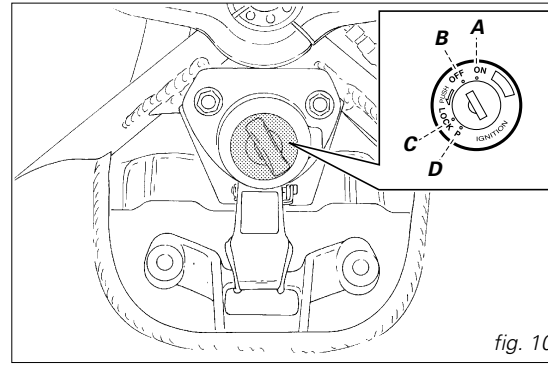

fig. 10

Left switch *(fig. 11)*
1) Dip switch, light dip switch, two positions:
position = low beam on;
position = high beam on.

2) Switch = 3-position turn indicator:
centre position = OFF;
position = left turn;
position = right turn.
To cancel turn indicators, push in once switch returns to central position.

3) Button = warning horn.

4) Button = passing.

5) Button = ABS off.
To turn off the ABS, hold down the button for over 3 seconds until the orange ABS light on the instrument panel starts to flash.
Release the ABS button.

Note
When the button is held down for over 5 seconds or is released before the ABS light comes on, the ABS stays on.

Warning
*Perform this operation when the vehicle is stopped (key turned to **ON**).*

Note
The orange light will keep flashing as a reminder that the ABS system is off.

Note
*The ABS is reset automatically when the key is turned to **OFF**. The next time the key is turned to **ON**, the ABS will be on.*

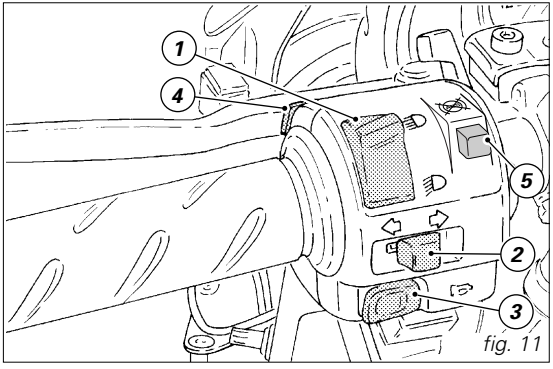

fig. 11

E

Clutch lever *(fig. 12)*
Lever (1) disengages the clutch. When you pull in the lever, you will disengage the engine from the gearbox and therefore from the driving wheel. Using the clutch properly is essential to smooth riding, especially when moving off.

Important
Using the clutch properly will avoid damage to transmission parts and spare the engine.

Note
It is possible to start the engine with side stand down and the gearbox in neutral. When starting the bike with a gear engaged, pull the clutch lever (in this case the side stand must be up).

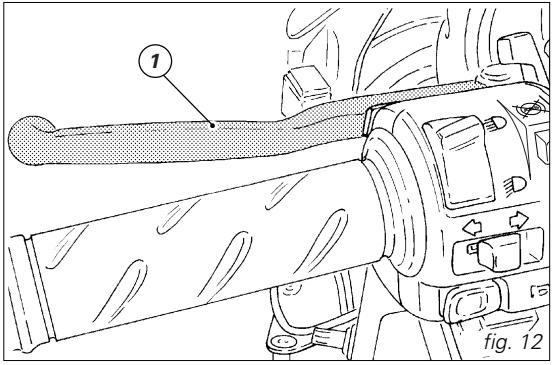

fig. 12

Cold start lever *(fig. 13)*
Use this device to start the engine from cold. It will increase the engine idling speed after starting.
Lever positions:
A) closed
B) fully open.
The lever can be opened and closed gradually to adjust speed until engine is fully warm.

Important
Never use the cold start device when the engine is warm or leave it open when riding.

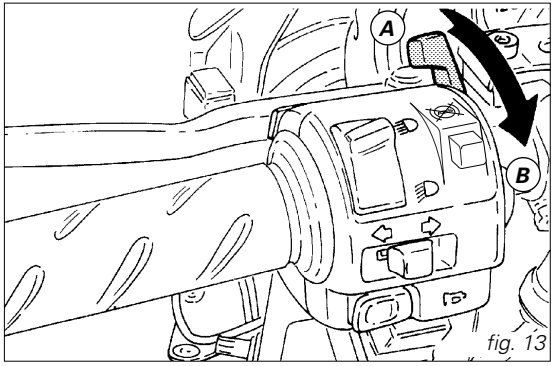

fig. 13

E

Right switch *(fig. 14)*
1) Switch, light switch, three positions:
right position **O** *= light off;*
centre position ≡D◐≡ *= front and rear parking lights, number plate and instrument panel lights on;*
left position ☼ *= headlight, front and rear parking lights, number plate and instrument panel lights on.*

2) Switch for ***ENGINE STOP****, two positions:*
position ◯ *(****RUN****) = run.*
position ⊗ *(****OFF****) = stop.*

E

Warning
This switch is mainly intended for use in emergency cases when you need to stop the engine quickly. After stopping the engine, return the switch to the ◯ *position to enable starting.*

Important
Stopping the engine using switch (2) when riding with lights on and leaving the ignition key in the ***ON*** *position, may run the battery flat as the lights will remain on.*

3) Button ⓘ *= engine start*

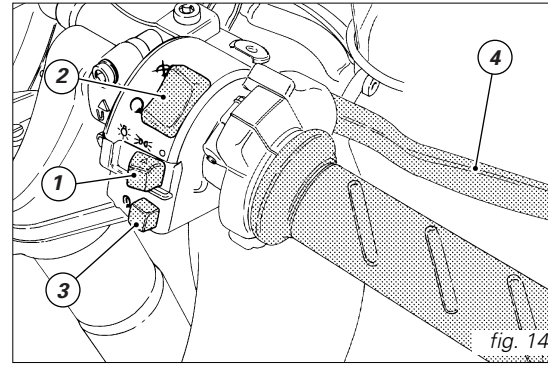

fig. 14

Throttle twistgrip *(fig. 14)*
The twistgrip on the right handlebar opens the throttles. When released, it will spring back to the initial position (idling speed).

Front brake lever *(fig. 14)*
Pull in the lever (4) towards the twistgrip to operate the front brake. The system is hydraulically operated and you just need to pull the lever gently.

Warning
Please read the instructions on pages 44 and 45 before using these controls.

E

Rear brake pedal *(fig. 15)*
Push down on the pedal (1) to apply the rear brake. The system is hydraulically operated.

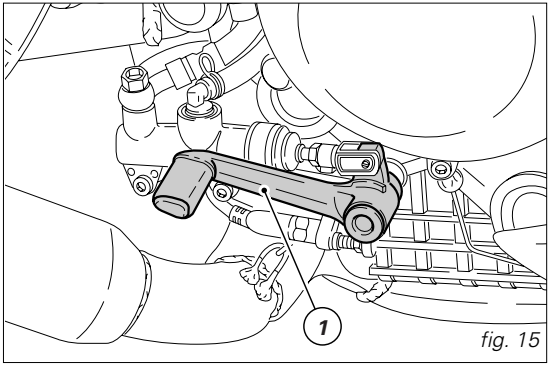

fig. 15

E

Gear change pedal *(fig. 16)*
The gear change pedal is at rest when in the central position ***N****, is moved up and down to change gears and then returns to the central position.*
down = push down on the pedal to engage 1st gear and to shift down. The ***N*** *light will go out.*
up = lift the pedal to engage the 2nd gear and then the 3rd, 4th, 5th and 6th gear.
Each time you move the pedal you will engage the next gear.

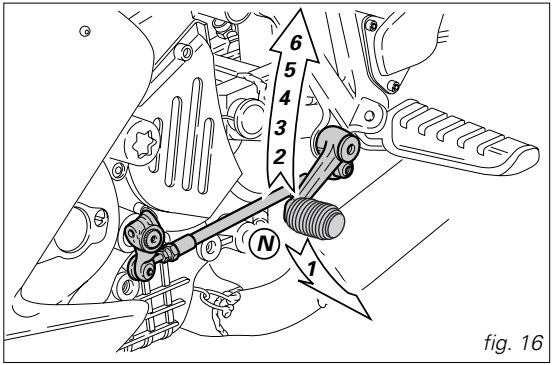

fig. 16

Setting the gear change and rear brake pedals

(fig. 17 and 18)
The gear change and rear brake pedals can be adjusted to suit the preferred riding position of each rider.
To set the gear change pedal,
lock linkage (1) and loosen the check nuts (2) and (3).

Note
Nut (2) has a left-hand thread.

Fit an open-end wrench to hexagonal element of linkage (1) and rotate until setting pedal in the desired position. Tighten both check nuts onto linkage.

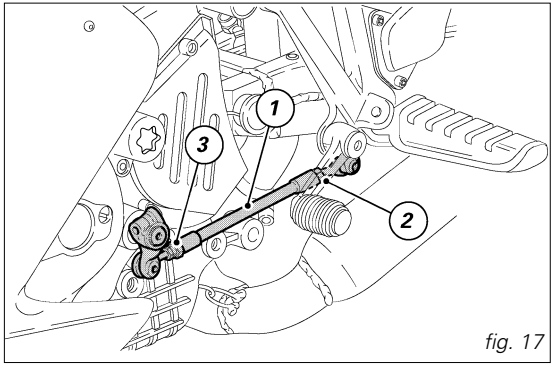

fig. 17

E

To set the rear brake pedal,
loosen check nut (4).
Turn pedal travel adjusting screw (5) until pedal is in the desired position.
Tighten check nut (4).
Work pedal by hand to make sure it has 1.5 - 2 mm free play before brake begins to bite.
If not so, set the length of cylinder linkage as follows.
Loosen the check nut (6) on cylinder linkage.
Tighten linkage into fork (7) to increase play, or unscrew linkage to reduce it.
Tighten check nut (6) and check pedal free play again.

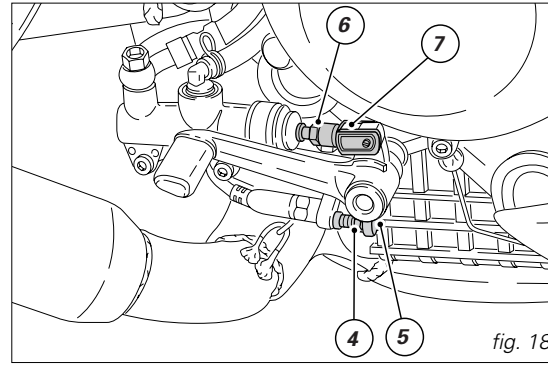

fig. 18

E

MAIN COMPONENTS AND DEVICES

Location *(fig. 19)*
1) Tank filler plug.
2) Seat catch and helmet hook.
3) Side stand.
4) Lifting handgrip.
5) Centre stand.
6) Rear view mirrors.
7) Front fork adjusters.
8) Rear shock absorber adjusters.
9) Power outlet.
10) Catalyzer.

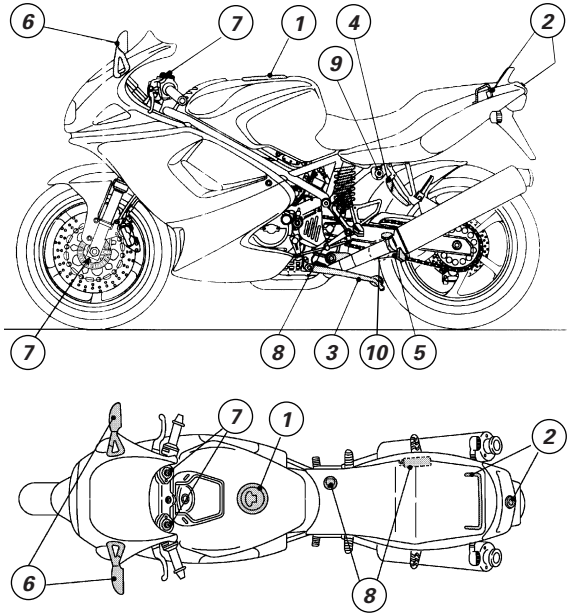

fig. 19

E

Tank filler plug *(fig. 20)*

Opening
Lift the protection lid (1) and fit the ignition key into the lock. Turn the key clockwise 1/4 turn to unlock. Lift the plug.

Closing
Refit the plug with the key in it and push it down into its seat.
Turn the key anticlockwise to its initial position and take it out. Close the lock protection lid (1).

Note
The plug can only be closed with the key in.

Warning
Always make sure you have properly refitted (see page 47) and closed the plug after each refueling.

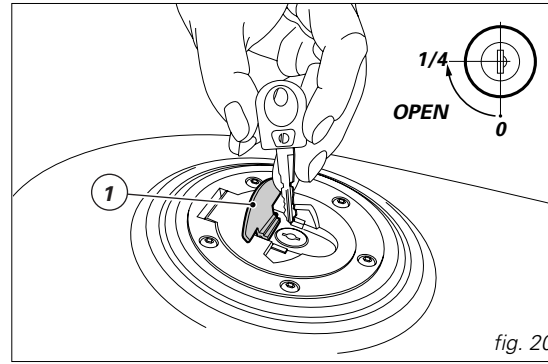

fig. 20

E

Seat catch and helmet hooks

Opening *(fig. 21)*
Fit the ignition key into the lock (4) and turn the key clockwise about 1/4 turn until the rear end of the seat lifts up. Pull the seat backwards to slide it off its front holders (1).
On the rear end of the compartment underneath the seat, there is the helmet fastening cable (2) (see page 48). Insert the cable into the helmet and insert the ends of the cable into one of the two hooks (3). Leave the helmet hanging outside (fig. 22) and refit the seat.

Warning
This system is intended to lock your helmet safely when you park your motorcycle. Never leave the helmet hanging from the hook when riding or it may get in the way and make you lose control of the motorcycle.

Closing
Make sure that all parts are arranged and secured properly inside the compartment under the seat. Slide the front ends of the seat bottom underneath the frame U-bolt and push down on the rear end of the seat until you hear the catch click. Make sure the seat is firmly secured to the frame and take the key out of the lock.

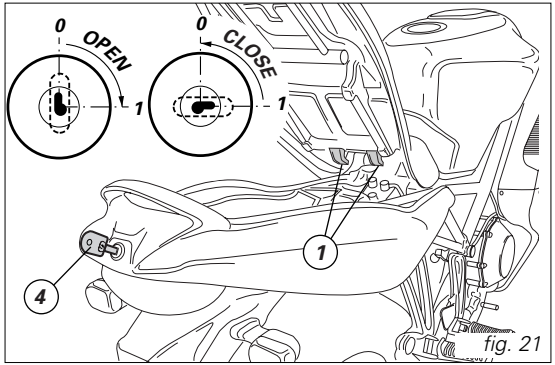

fig. 21

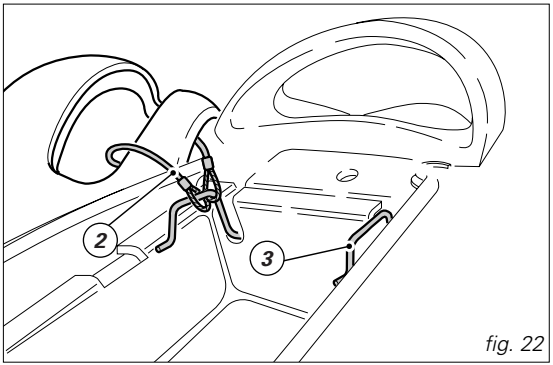

fig. 22

E

Anti-theft padlock *(fig. 23)*
The anti-theft padlock (1) is stored under the seat.
Remove strap (2) to take padlock out.
Use the padlock in addition to the steering lock when parking your motorcycle in unsafe areas.

Warning
Using padlocks or other locks designed to prevent motorcycle motion, such as brake disc locks, rear sprocket locks, and so on is dangerous and may impair motorcycle operation and affect the safety of rider and passenger.

E

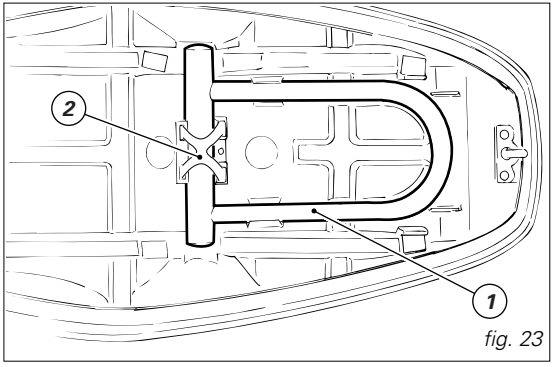

fig. 23

Side stand *(fig. 24)*

Important
Put the motorcycle on the side stand only when you expect to stop for a short time.
Before lowering the side stand, make sure that the bearing surface is hard and flat.

Do not park on soft or pebbled ground or on asphalt melt by the sun heat and similar or the motorcycle may fall over.
When parking in downhill road tracts, always park the motorcycle with its rear wheel facing downhill.
To pull down the side stand, hold the motorcycle handlebars with both hands and push down on the thrust arm (1) with your foot until it is fully extended. Tilt the motorcycle until the side stand is resting on the ground.

Warning
Do not sit on the motorcycle when it is supported on the side stand.

To move the side stand to its rest position (horizontal position), tilt the motorcycle to the right and, at the same time, lift the thrust arm (1) with your foot.

Note
Check for proper operation of the stand mechanism (two springs, one into the other) and the safety sensor (2) at regular intervals.

Note
It is possible to start the engine with side stand down and the gearbox in neutral. When starting the bike with a gear engaged, pull the clutch lever (in this case the side stand must be up).

Lifting handgrip
A handgrip (1, fig. 25) that pivots on the left pillion passenger footpeg is provided to help you place the motorcycle on the centre stand or keep it upright when manoeuvring to park it.
Fold out the handgrip. After use, just release it and it will fold back to its rest position.

Power outlet
A specific power outlet (2, fig. 25) has been fitted to feed dedicated accessories. Outlet is protected by a 20A fuse.

E

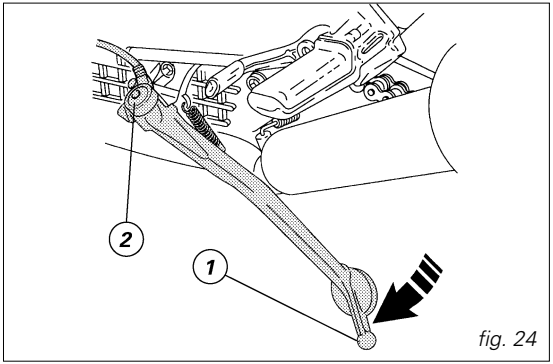

fig. 24

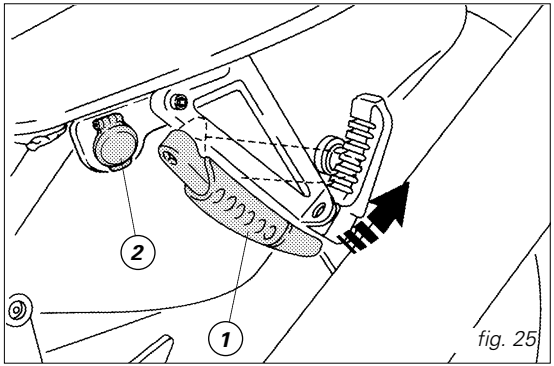

fig. 25

E

Centre stand

Always use the centre stand (1, fig. 26) to support the motorcycle steadily when parked. It is designed to support the motorcycle even when carrying the maximum load allowed.

Warning

Before putting the motorcycle on the centre stand, make sure the bearing surface is hard and flat.

Hold the left handlebar with your left hand and the lifting handgrip (2, fig. 27) with your right hand. Push down on the thrust arm (3) of the centre stand until it touches the ground. At the same time, hold the handgrip and pull the motorcycle upward and backward.
To take the bike off the centre stand, simply hold the handlebars and push the motorcycle forward, until the rear wheel touches the ground. The stand will spring back to rest position automatically.

Warning

Before moving off, always make sure the centre stand is fully up.

Check for proper operation of the stand mechanism (two springs, one into the other) at regular intervals.

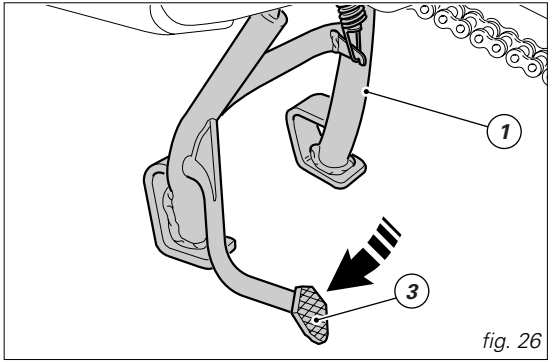

fig. 26

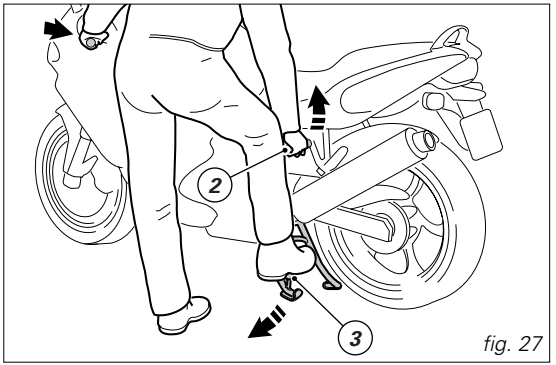

fig. 27

Rear view mirrors *(fig. 28)*
The rear view mirrors of your motorcycle are made up of two parts held together by a special inner spring. This spring counters mirror rotation so the mirror will not smash the headlamp fairing if hit accidentally. The spring then moves the mirror back to its original position.

Important
If either of the mirror parts comes off, have the mirror repaired or replaced by a Ducati Dealer or Authorized Workshop.

Warning
Never ride with a missing rear view mirror: the inability to see the traffic behind you may lead to severe accidents.

The mirrors have bifocal lenses that offer a wider range of vision, with no blind spots:
A) inner area = normal view
B) outer area = magnified view.

Warning
What you see in the mirror is actually closer to you than it appears in the mirror view, even more so when looking at the magnifying outer area (B).

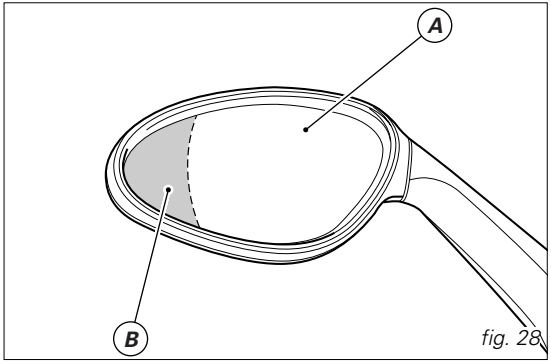

fig. 28

E

Front fork adjusters

The front fork has rebound and compression damping adjusters.

This adjustment is done using the outer adjusters:
1) (fig. 29) to adjust rebound damping;
2) (fig. 29) to adjust inner springs preload;
3) (fig. 30) to adjust compression damping.

Turn the adjuster (1) on fork leg top with a flat screwdriver to adjust rebound damping.
To reach the adjuster (3, fig. 30), insert a screwdriver into the passing hole on the wheel shaft at fork leg axis.
As you turn the adjusting screws (1 and 3), you will hear them click. Each click identifies a setting. Turn the screw all the way in to set the hardest damping (position 0). This will be your starting point. Now turn the screw anticlockwise and listen for the clicks that identify setting positions no. "1", "2" and so on.

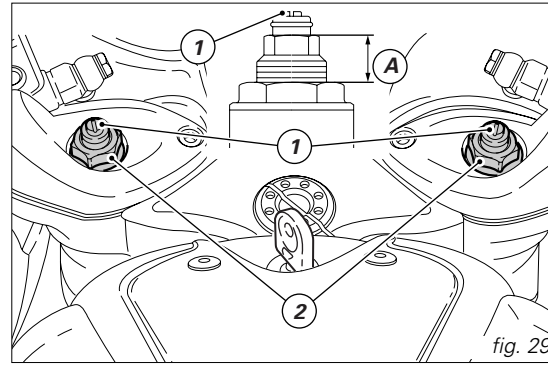

fig. 29

STANDARD factory setting is as follows:
compression: 12 clicks;
rebound: 11 clicks.
The setting range is 14 clicks (both for rebound and compression). The 14th click gives the softest damping.
To change the preload of the spring inside each fork leg turn the hex. adjusting nut (2) with a 22-mm hexagon wrench.
Height A (fig. 29) determines preload and may vary from 25 to 10 mm.
Factory setting is 16 mm.

Important
Adjust both fork legs to same settings.

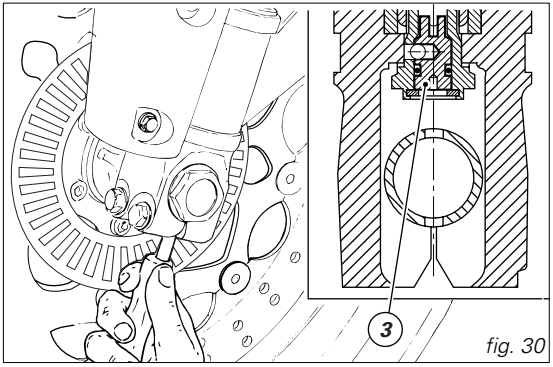

fig. 30

E

E

Shock absorber adjusters

The rear shock absorber has outer adjusters that enable you to adjust your motorcycle to the load.
The adjuster (1, fig. 31) located on the rear right hand side - at the control unit - sets rebound damping.
The adjuster (2, fig. 32) on the shock absorber expansion reservoir controls compression damping.
*Turning the adjusters (1 and 2) clockwise gives harder damping **H**, turning anticlockwise gives softer damping **S**.*
STANDARD setting. Turn the adjusters all the way in (clockwise) then:
- undo the adjuster (1) 14 clicks;
- undo the adjuster (2) 14 clicks.
The knob (3, fig. 32) located on the rear right hand side under the passenger footpeg controls outer spring preload.
To change spring preload, turn the knob (3) by hand clockwise or anticlockwise to increase or decrease spring preload as required.
STANDARD spring length:
149.5 mm.

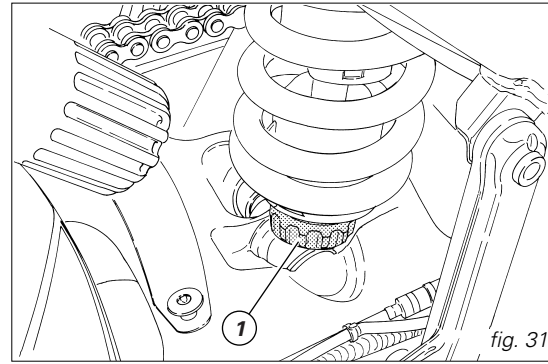

fig. 31

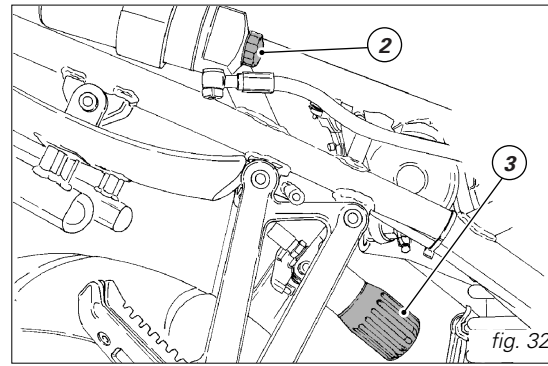

fig. 32

Warning
The shock absorber is filled with gas under pressure and may cause severe damage if taken apart by unskilled persons.

Important
When carrying a passenger and luggage, set the rear shock absorber spring to proper preload to improve motorcycle handling and keep safe clearance from the ground. You may find that rebound damping needs adjusting as well.

Running-in recommendations

Max. rotation speed *(fig. 33)*
Rotation speed for running-in period and during standard use (rpm)
1) up to 1000 km;
2) from 1000 to 2500 km;
3) after 2500 km.

Up to 1000 km
During the first 1000 km, keep an eye on the rev counter. It should never exceed 6000 rpm.
During the first hours of riding, it is advisable to run the engine at varying load and rpm, though still within recommended limit.
To this end, roads with plenty of bends and even slightly hilly areas are ideal for a most efficient running-in of engine, brakes and suspensions.
For the first 100 km, use the brakes gently. Do not brake violently or keep brake applied for too long. This will enable a correct break-in of friction material on brake pads against brake discs.
For all mechanical parts of the motorcycle to adapt to one another and above all not to adversely affect the life of basic engine parts, it is advisable to avoid harsh accelerations and not to run the engine at high rpm for too long, especially uphill.
Furthermore, the drive chain should be inspected frequently. Lubricate as required.

From 1000 to 2500 km
At this point, you can squeeze some more power out of your engine. However never exceed 7500 rpm.

Important
During the whole running-in period, the maintenance and service rules recommended in the Warranty Card should be observed carefully. Have the service inspections performed as recommended in the Warranty Card.
Failure to comply with these rules will release Ducati Motor Holding S.p.A. from any liability whatsoever for resulting engine damage or shorter engine life.

After 2500 km
After running-in, never exceed 10000 rpm under standard conditions of use.

Strict observance of running-in recommendations will ensure longer engine life and reduce the likelihood of overhauls and tune-ups.

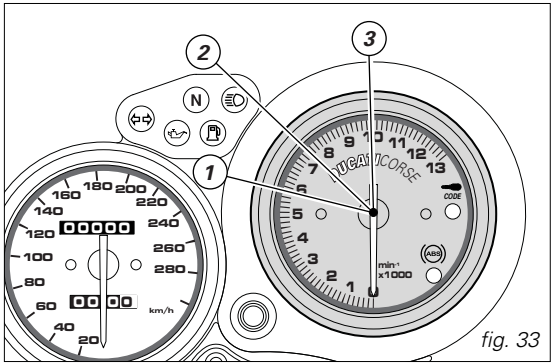

fig. 33

E

Pre-ride checks

Warning
Failure to carry out these checks before riding, may lead to motorcycle damage and injury to rider and passenger.

Before riding, perform a thorough check-up on your bike as follows:

E

Fuel level in the tank
Check fuel level in the tank.
Fill tank if needed (page 47).

Engine oil level
Check oil level in the sump through the sight glass. Top up if needed (page 72).

Brake and clutch fluid
Check fluid level in the relevant reservoirs.

Coolant level
Check coolant level in the expansion reservoir. Top up if necessary (page 55).

Tyre condition
Check tyre pressure and condition (page 70).

Controls
Work the brake, clutch, throttle and gear change controls (levers, pedals and twistgrips) and check for proper operation.

Lights and indicators
Make sure lights, indicators and horn work properly. Replace any burnt-out bulbs (page 62).

Key-operated locks
Check that fuel filler plug and seat catch locks are closed firmly.

Stand
Make sure side stand (pages 30 and 31) and centre stand (page 32) operate smoothly and are in the correct position.

ABS light
Set the key to ON and make sure the light comes on for a few seconds. When the light turns off, it means that the ABS is on.

Warning
In case of malfunctioning, do not start the motorcycle and call a Ducati Dealer or Authorized Workshop.

Starting the engine

Note
Follow the "High ambient temperature" procedure to start the engine when it is warm.

Warning
Before starting the engine, become familiar with the controls you will need to use when riding.

Regular ambient temperature
(10 °C/50 °F to 35 °C/ 95 °F):
1) Move the ignition key to ***ON*** *(fig. 34). Make sure both the green light* ***N*** *and the red light on the instrument panel come on.*

Important
The oil pressure light should go out a few seconds after the engine has started (page 12).

Warning
The side stand must be fully up (in a horizontal position) as its safety sensor prevents engine start when down.

Note
It is possible to start the engine with side stand down and the gearbox in neutral. When starting the bike with a gear engaged, pull the clutch lever (in this case the side stand must be up).

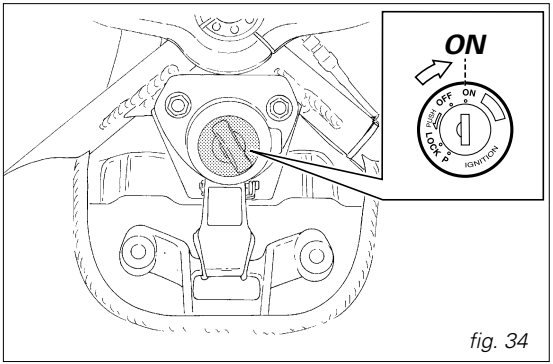

fig. 34

E

2) Move the cold start lever to the B position (fig. 35).

*3) Check that the stop switch (1, fig. 36) is positioned to ∩ (**RUN**), then press the starter button (2).*
Let the engine start without using the throttle control.

Important
Never operate the electric start button more than 5 seconds at a time. If needed, allow 10 seconds before attempting to restart the engine.

4) Move the cold start lever to the vertical position (A) to let engine idle at about 1400-1500 rpm.

Important
Do not rev up the engine when it is cold. Allow some time for oil to reach all points that need lubricating.

5) As the engine warms up, move the cold start lever gradually towards the vertical position (A, fig. 35). Once fully warm, the engine should hold idling rpm with the cold start shut down.

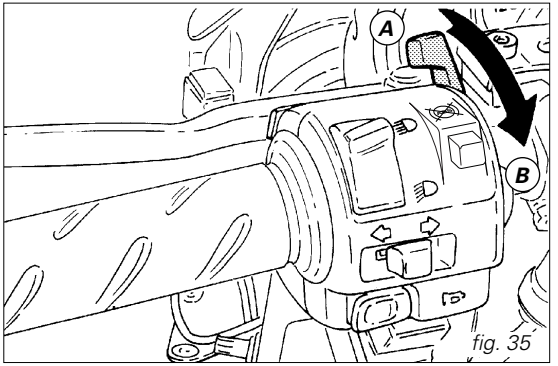

fig. 35

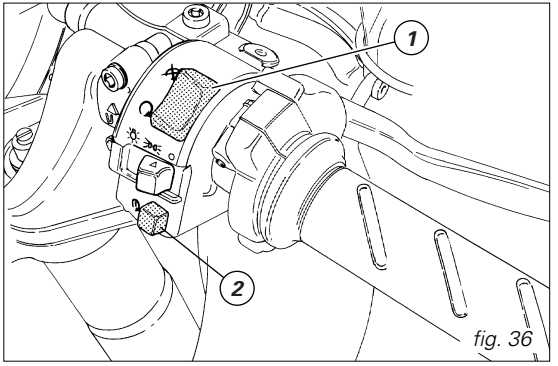

fig. 36

High ambient temperature *(over 35 °C/95 °F):*
Follow the same procedure, however, do not use the cold start device.

Cold ambient temperature *(below 10 °C/50 °F):*
Follow the procedure for "Regular ambient temperature", however allow 5 minutes for the engine to warm up (see step 5).

E

E

Moving off

1) Disengage the clutch squeezing the control lever.
2) Push down on gear change lever sharply with the tip of your foot to engage the first gear.
3) Speed up engine, by turning the throttle twistgrip and slightly releasing the clutch lever at the same time. The motorcycle will start moving off.
4) Let go of clutch lever and speed up.
5) To shift up, close the throttle to slow down engine, disengage the clutch, lift the gear change lever and let go of clutch lever.
To shift down, release the twistgrip, pull the clutch control lever, shortly speed up to help gears synchronize, shift down and release the clutch.
The controls should be used correctly and timely: when riding uphill do not hesitate to shift down as soon as the motorcycle tends to slow down, so you will avoid stressing the engine and the motorcycle abnormally.

Important

Avoid harsh accelerations, as this may lead to misfiring and transmission snatching. The clutch lever should not be pulled longer than necessary after gear is engaged, or friction parts may overheat and wear out.

Braking

Slow down in time, shift down to engine-brake first and then brake applying both brakes. Pull the clutch lever before stopping the motorcycle, to avoid sudden engine stop.

ABS system

Using the brakes correctly under adverse conditions is the hardest – and yet the most critical - skill to master for a rider. Statistically, the risk of a fall or an accident is highest during braking. A locked front wheel leads to loss of traction and stability, resulting in loss of control.
The Anti-Lock Brake System (ABS) has been developed to enable riders to use the vehicle's braking force to the fullest possible amount in emergency braking or under poor pavement or adverse weather conditions.
ABS uses hydraulics and electronics to limit pressure in the brake circuit when a special sensor mounted to the wheel signals the electronic control unit that the wheel is about to lock up. This avoids wheel lockup and preserves traction.

Pressure is raised back up immediately and the control unit keeps pumping the brake until the risk of a lockup disappears.
Normally, the rider will perceive ABS operation as a harder feel or a pulsation of the brake lever and pedal.
The front and rear brakes use separate control systems, meaning that they operate independently. Likewise, the ABS is not an integrated braking system and does not control both the front and rear brake at the same time.
The ABS may be turned off by pressing the button incorporated in the LH switch (see page 19).

Warning
When the ABS is off, the vehicle provides the standard braking force offered by the regular braking system. As a result, using one brake at a time will reduce braking efficiency.
Never use brake controls harshly or violently or you may lock the wheels and lose control of the motorcycle.
When riding in the rain or on slippery surfaces, braking will become less effective. Always use the brakes very gently and carefully when riding under these conditions.
Any sudden manoeuvres may lead to loss of control.
When tackling long, high-gradient downhill road tracts, shift down gears to use engine braking. Apply one brake at a time and use brakes sparingly. Keeping the brakes applied all the time would cause the friction material to overheat and reduce braking power dangerously.
Underinflated tyres reduce braking efficiency, handling accuracy and stability in a bend.

Stopping the motorcycle

If you let go of the throttle twistgrip, the motorcycle will slow down gradually and smoothly. Then, shift down releasing the clutch, and finally change from first to neutral. Apply brakes and you will bring the motorcycle to a complete stop. To switch the engine off, simply turn the key to ***OFF*** *(fig. 37).*

E

Important

Never leave the key in the ***ON*** *position when engine is stopped, or this will damage the electric components.*

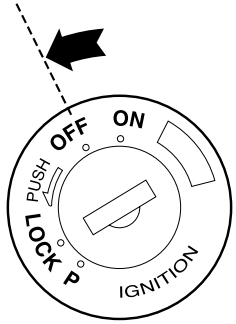

fig. 37

Parking

Stop the motorcycle, then put it on the centre stand to park it (see page 32).
Turn the handlebar fully left and turn the key to the ***LOCK*** *position (fig. 38).*
To avoid theft, use the supplied padlock (see page 30).
If you park in a garage or other facilities, make sure that there is proper ventilation and that the motorcycle is not near a source of heat.
You may leave the parking lights on by turning the key to position ***P****.*

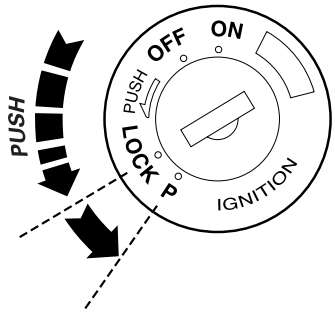

fig. 38

Important
*Do not leave the key turned to **P** for long periods or the battery will run down.*
Never leave the ignition key in the switch when you are leaving your bike unattended.

Warning
The exhaust system might be hot, even after engine is switched off; pay particular attention not to touch exhaust system with any body part and do not park the vehicle next to inflammable material (wood, leaves etc.).

E

Refueling
Never overfill the tank when refueling. Fuel should never be touching the rim of filler recess (fig. 39).

Warning
Use low-lead fuel having at least 95 fuel octane rating. Be sure there is no fuel trapped in the filler recess.

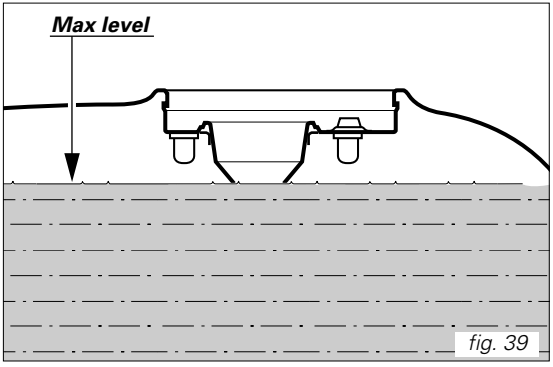

fig. 39

Tool kit and accessories *(fig. 40)*
The compartment under the seat holds:
an Owner's manual
a helmet fastening cable
a tool bag for normal maintenance and checks.

To reach this compartment, the seat must be removed by opening the catch (8) (page 29).

E

Tool bag holds *(fig. 41)*
1) Box wrench for spark plugs.
2) Double-bit screwdriver.
3) Allen wrenches.
4) Helmet fastening cable.
5) Extension.
6) Box wrench.

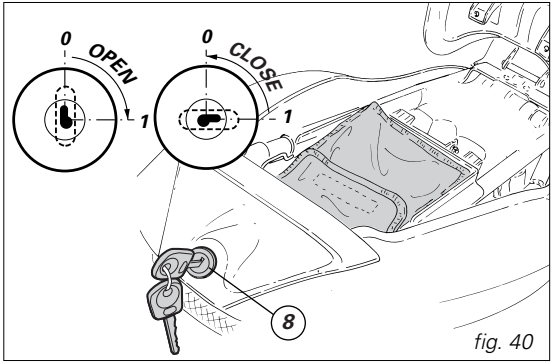

fig. 40

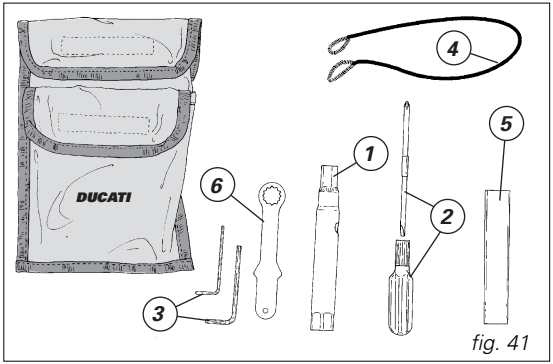

fig. 41

Removing the fairing

Some servicing operations need the motorcycle fairing to be removed.

Warning

Firmly secure all removed parts when refitting them, otherwise some of them might suddenly come off when riding and you may lose control of your motorcycle.

Important

At reassembly always use nylon washers when tightening fastening screws, not to damage painted parts and Plexiglas windproof cover of headlight fairing. Some fastening screws are of the self-tapping type; do not overtighten, otherwise threading might damage and screws would not be tightened properly next time.

Lower body panels

Unscrew the four screws (1) that hold each lower body panel to the upper body panels (fig. 42).

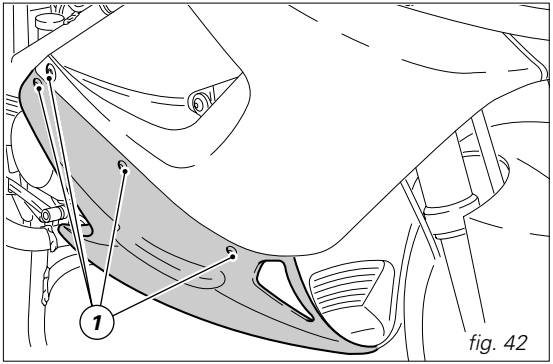

fig. 42

Unscrew 2 of the 4 lower screws (2, fig. 43) that hold the body panels together and to the central air conveyor. Remove the lower body panels.

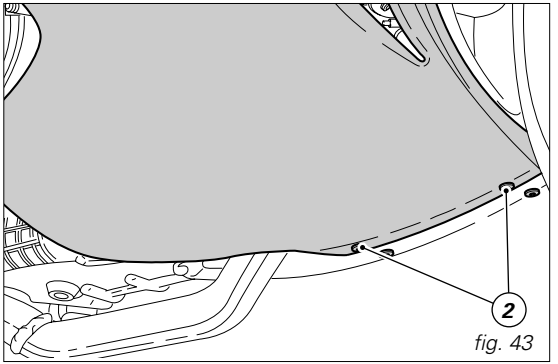

fig. 43

E

Instrument panel side guards *(fig. 44)*
Remove the screw in the centre (3) joining the two side guards together and the two screws (4) that secure them to the inner headlight fairing.

Note
These screws have nylon washers (5).

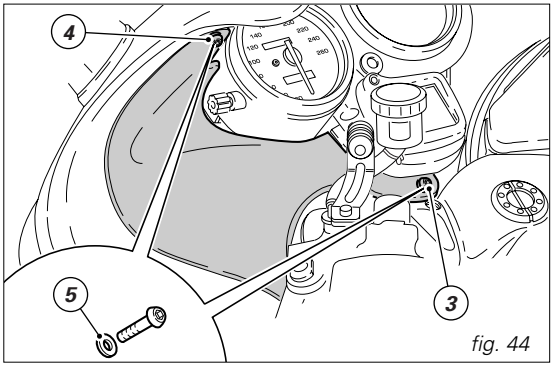

fig. 44

Headlamp fairing

Remove the side guards.
Detach the rear view mirrors from the headlamp fairing by unscrewing the four inner screws (1, fig. 45).
Disconnect the cables of the turn indicators.
Unscrew the 6 fastening screws (2, fig. 46) that hold the headlamp fairing to the side body panels.
Remove the fairing sliding it off the headlamp.

Important

When refitting, it is necessary to loosen the screws of both rear-view mirror mounts and then fit the headlight fairing. Make sure direction indicator cables are not squeezed and fit rear-view mirrors with the relevant gasket, secure them with screws (1).
Set the headlight fairing so that its top edge is horizontal. Tighten screws (2) starting from the front ones then tighten mirror mount screws previously loosened.

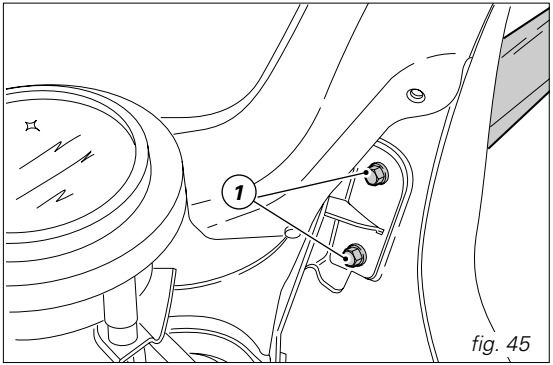

fig. 45

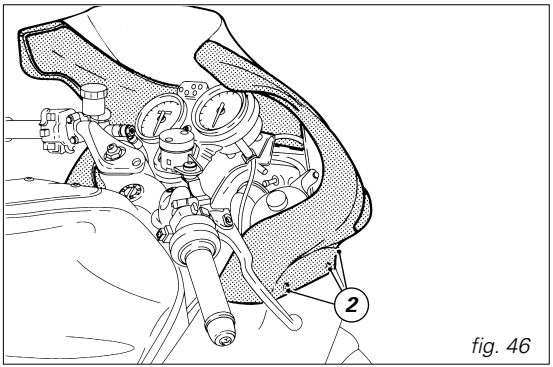

fig. 46

E

Removing the upper and lower body panels together

Remove the side guards of the instrument panel and the headlamp fairing.
Unscrew the fastening screw (1, fig. 47) that holds each body panel to the side subframe on the left side or to the expansion reservoir on the right side and the rear screws (2) that hold each of them to the frame bracket.
Unscrew the front fastening screw (3, fig. 48) that holds each body panel to the front baffle.
Unscrew the rear fastening screw (4) holding each body panel to the frame.
Unscrew the two lower fastening screws (5) holding the body panels to the central air conveyor.
Unscrew one of the two screws (6) joining the body panels together. Remove the body panels.

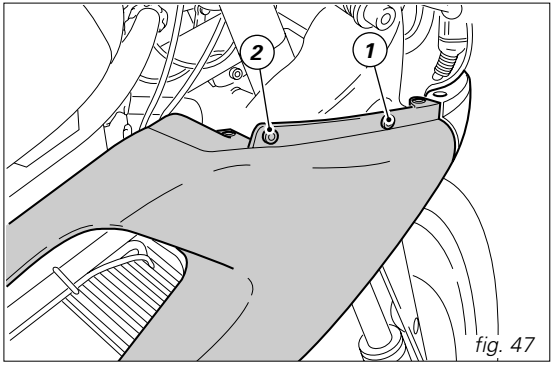

fig. 47

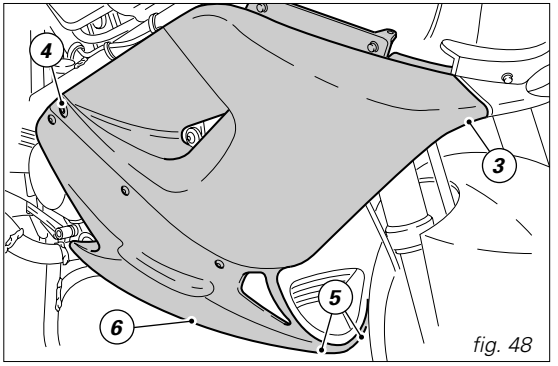

fig. 48

Side panniers

The motorcycle comes ready to fit the side panniers.
Side panniers kit in the same colour as the motorcycle is available from Ducati Spare Parts Department.
Kit includes all parts needed to install the panniers as well as the relevant instructions.

Lifting the fuel tank

Unscrew the 2 screws (1, fig. 49) that hold the cover to the tank support. Remove the cover sliding it off the ignition switch.
Pull and lift the clip (2, fig. 50) off the tank support.
Lift the tank and unhook the support rod (3, fig. 51). Rest the tank onto the rod as shown in the figure.
When you are finished, reverse the above procedure to refit all the parts you have removed.

⚠ *Warning*
Make sure the fuel in the tank is less than 5 litres (the fuel warning light on the instrument panel should be on) or fuel may leak out through the filler plug breather.

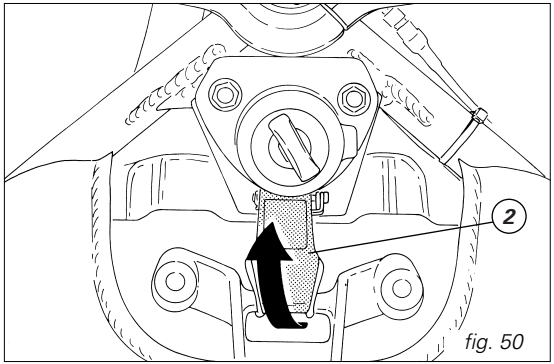

fig. 50

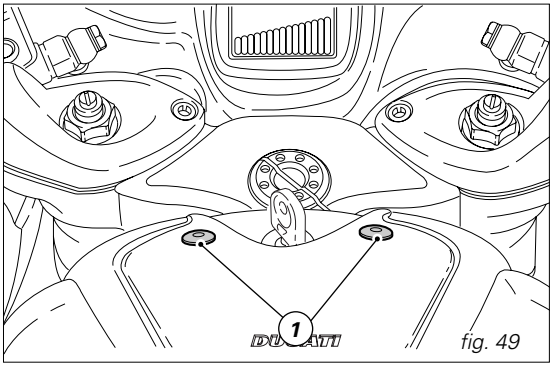

fig. 49

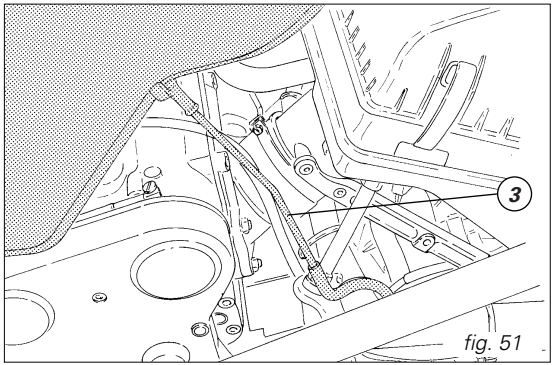

fig. 51

E

E

Cleaning and changing air filters

Replace air filter at the required intervals shown in the routine maintenance chart (see Warranty Card). The air box is accessible after lifting the fuel tank.
Undo the clips (1, fig. 52) of the cover on both sides of the air box, then remove cover (2).
Remove the filter (3, fig. 53) and fit a new one.

Important
A dirty filter will reduce air intake, increase fuel consumption, reduce engine power, and foul the spark plugs. Do not use the motorcycle without filter or suspended matters could get into the engine and cause damage.
Install the filter properly into its seat in the air box as shown in figure 53 and refit all the parts you have removed.

Important
If you are using the motorcycle on dusty or very wet roads, replace filter more frequently than recommended intervals (see Warranty Card).

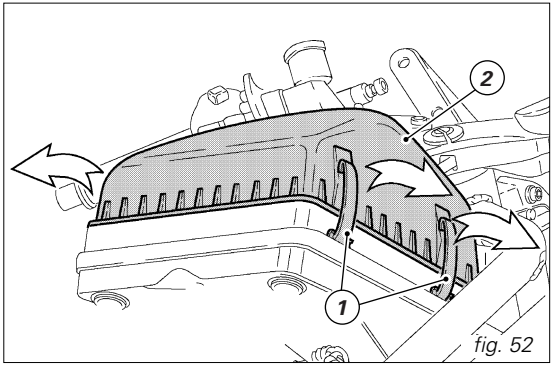

fig. 52

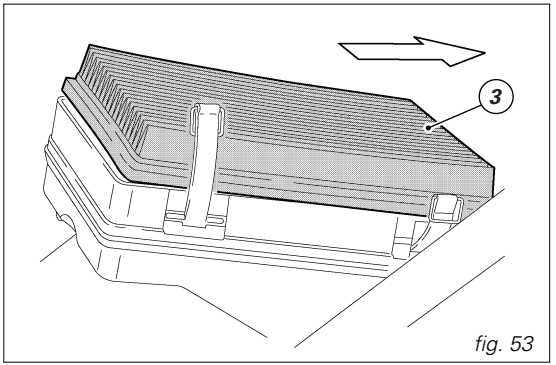

fig. 53

Checking the coolant level

Check the coolant level in the expansion tank, on the RH side of the motorcycle.
*The coolant level must be between the **MAX** and **MIN** marks (fig. 54).*
Top up if the level is too low.
Remove the r.h. side guard of the instrument panel.
*Unscrew the filler (1, fig. 55) and add a mixture consisting of water and antifreeze SHELL Advance Coolant or Glycoshell (35-40% of the volume) up to **MAX** mark.*

Refit the filler (1) and reassemble all removed parts.

This mixture improves operating conditions (coolant will start freezing at –20 °C/- 4 °F).

Coolant circuit capacity: 3.5 cu dm (liters).

Warning
Place the motorcycle on a flat surface and make sure the engine is cold before proceeding.

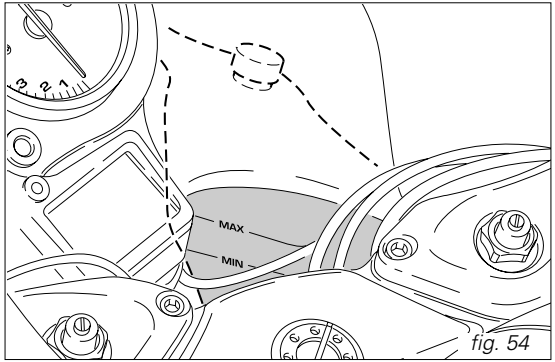

fig. 54

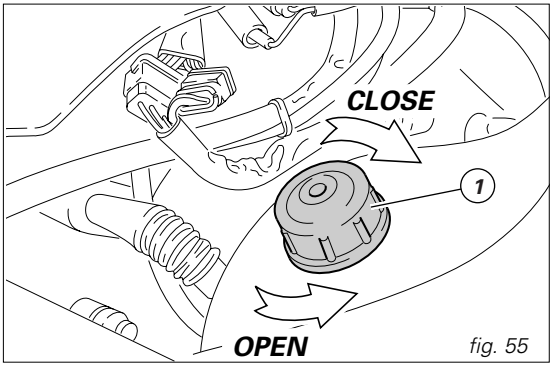

fig. 55

E

E

Checking brake and clutch fluid level

Fluid level should never fall below the MIN mark on each reservoir (fig. 56). If level drops below the limit, air might get into the circuit and affect the operation of the system involved.
Brake and clutch fluid must be topped up and changed at the intervals specified in the routine maintenance chart (see Warranty Card) by a Ducati Dealer or Authorized Workshop.

Important
It is recommended all brake and clutch lines be changed every four years.

Clutch system

If the control lever has exceeding play and the transmission snatches or jams as you try to engage a gear, it means that there is air in the circuit. Contact your Ducati Dealer or an Authorized Workshop to have the system inspected and air drained out.

Warning
Clutch fluid level will increase as clutch plate friction material wears down. Do not exceed specified level (3 mm above minimum level).

Brake system

If you find exceeding play on brake lever or pedal and brake pads are still in good condition, contact your Ducati Dealer or an Authorized Workshop to have the system inspected and any air drained out of the circuit.

Warning
Brake and clutch fluid will damage paintwork and plastic parts if accidentally spilled.

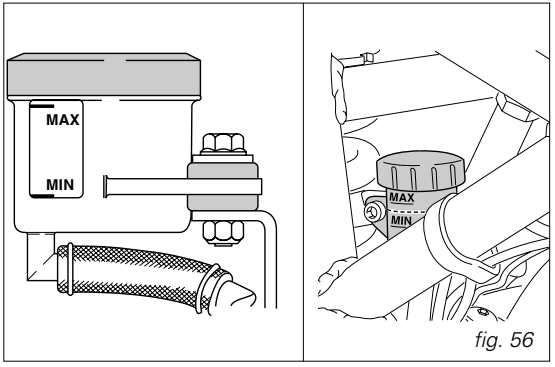

fig. 56

Checking brake pads for wear

Front brake *(fig. 57)*
To facilitate inspection without removing the pads from the calipers, brake pads have a wear mark. If the grooves in the friction material are still visible, the pad is still in good condition.

Rear brake *(fig. 57)*
The friction material on each pad should be at least 1 mm thick.

Important
Have the brake pads replaced at a Ducati Dealer or Authorized Workshop.

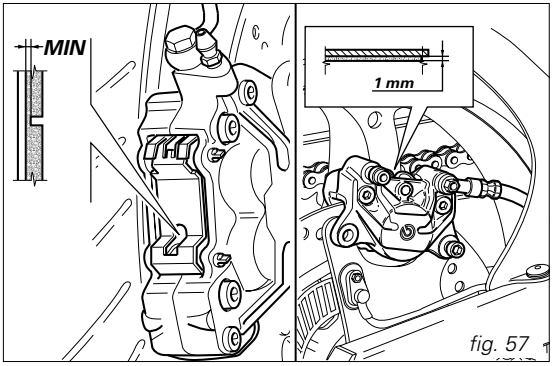

fig. 57

E

Lubricating cables and joints

The condition of the outer sheaths of the throttle and cold start cables should be checked at regular intervals. The sheaths should show no signs of squeezing or cracking. Work the controls to make sure the cable slides smoothly inside the sheath: if you feel any friction or hard spots, have the cable replaced by a Ducati Dealer or Authorized Workshop. To prevent these failures, smear the ends of the Bowden cables with SHELL Advance Grease or Retinax LX2 at regular intervals.

For the throttle cable, it is best to remove the cover (1, fig. 58) by unscrewing the two fastening screws (2) and then grease the cable end and the pulley.

⚠ *Warning*

When refitting the cover, be sure to slide the cable properly onto the suitable pulley and inside the guide in the cover (3).

Refit the cover and tighten the screws (2).

To ensure smooth operation of the stand joints, clean off any dirt and apply SHELL Alvania R3 at all points exposed to friction.

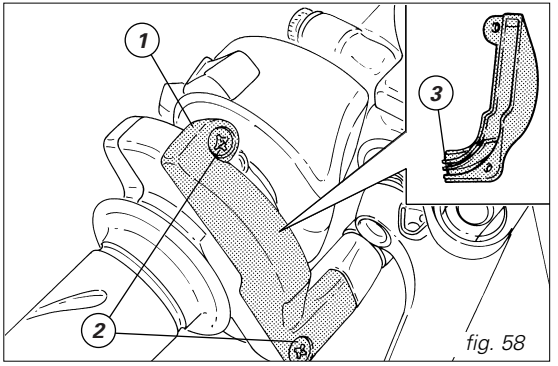

fig. 58

E

Throttle cable adjustment

The throttle twistgrip must have a free play of 1.5 - 2 mm measured at the edge of the twistgrip, at all positions of the handlebars. If it needs adjusting, use the suitable adjuster (1, fig. 59) provided on the throttle control.

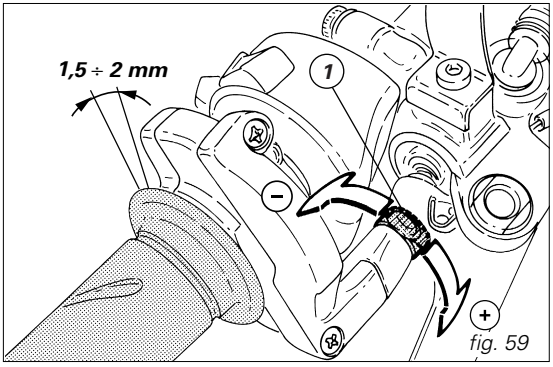

fig. 59

E

Charging the battery *(fig. 60)*
Before charging the battery, it is best to remove it from the motorcycle.
Remove the r.h. side fairing (see page 49), undo the screw (1) and remove the upper bracket.
*Always disconnect the black negative terminal (**-**) first, and then the red positive terminal (**+**).*

E

Warning
Batteries develop explosive gases: keep it away from heat sources.

Charge the battery in a ventilated room.
*Connect the battery charger leads to the battery terminals (red to positive terminal **+**, black to negative terminal **-**).*

Important
Make sure the charger is off when you connect the battery to it, or you might get sparks at the battery terminals that could ignite the gases inside the cells.
Always connect the red positive (+) terminal first.

Reinstall the battery on its mount and secure the upper bracket with the screw (1). Apply some grease on the fastening screws to improve conductive capacity and connect the terminals.

Warning
Keep the battery out of the reach of children.

Charge the battery at 1 A for 5-10 hours.

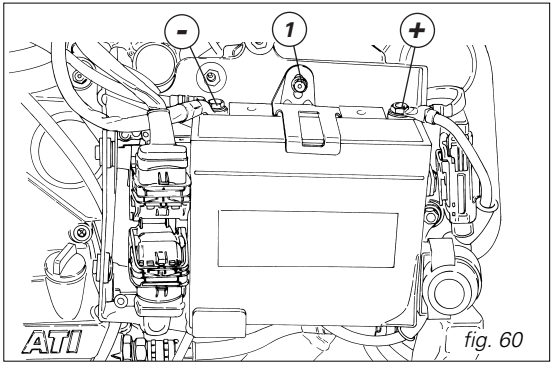

fig. 60

Chain tensioning

Turn the rear wheel slowly until you find the position where chain tension is tightest.
Put motorcycle on the centre stand and push the chain up pressing with a finger at mid-length of swingarm. The lower stretch of chain must have a slack (fig. 61) of 32 mm.
Chain tension is adjusted as follows:
Slacken the nut (1, fig. 62) of the wheel shaft, tighten (turn clockwise) or slacken the screw (2) on either side of the swingarm equally to increase or reduce chain tension. If you are slackening the chain, you will have to push the wheel forward.

Important
Improper chain tension will lead to early wear of transmission parts.

Make sure you have adjusted to the same setting marks on both sides of the swingarm.
This will ensure perfect wheel alignment.
Grease the thread of the wheel shaft nut (1) with SHELL Retinax HDX2 grease and torque nut to 83 Nm.
Grease the threads of adjusting screws (2) with SHELL Alvania R3 grease and torque them to 8 Nm.

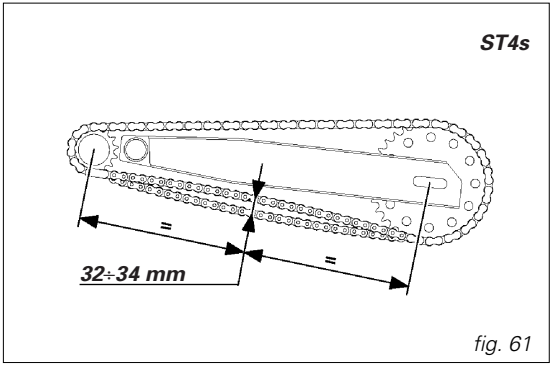

fig. 61

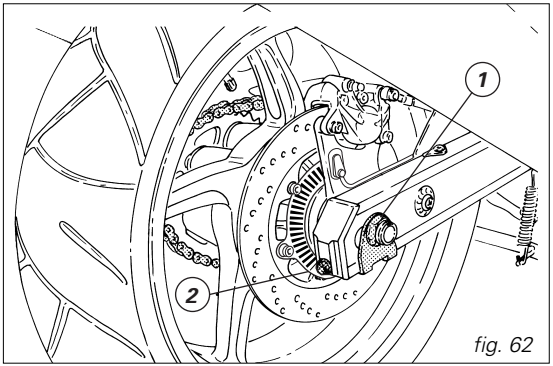

fig. 62

E

E

Chain lubrication

The chain fitted on your motorcycle has O-rings that keep dirt out of and lubricant inside the sliding parts. The seals might be irreparably damaged if the chain is cleaned using any solvent other than those specific for O-ring chains or washed using steam or water jets. After cleaning, blow the chain dry or dry it using absorbent material and apply SHELL Advance Chain or Advance Teflon Chain on each link.

Important

Using non-specific lubricants may lead to severe damage to chain, front and rear sprocket.

Replacing bulbs

Before replacing a burnt-out bulb, make sure that the new one complies with voltage and wattage as specified on the "Electric System" for that lighting device (page 82).

***Headlamp** (fig. 63)*

To gain access to headlamp bulbs remove the side guards of the instrument panel (see page 50). To facilitate this operation, you may remove the screw (1, fig. 63) that holds the instrument panel to the headlamp holder and lift the instrument panel.

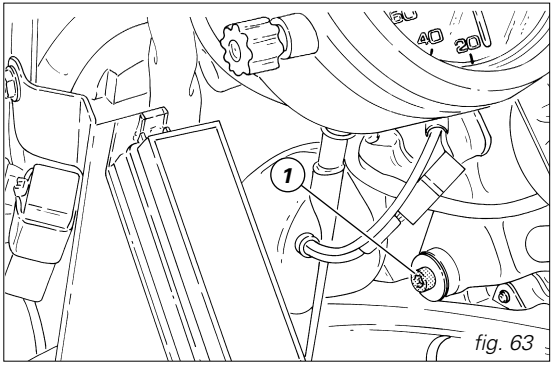

fig. 63

Disassembly
R.h. low beam bulb:
remove the rubber cover. Press the lower quick-release button to disconnect the connector (1, fig. 64).

L.h. high beam bulb (fig. 65):
disconnect the connector of the white bulb cable from the front wiring. Remove the rubber cover from the headlamp body and pull out the bulb cable.

Note
The black ground cable connector does not need to be disconnected to replace the headlamp bulbs.
Release the clip (3) that secures the bulb and remove it from the socket (fig. 64 and 65).
Replace the bulb.

Note
Be careful to hold the new bulb at the base only. Never touch the transparent body with your fingers or it will blacken resulting in reduced bulb brilliancy.

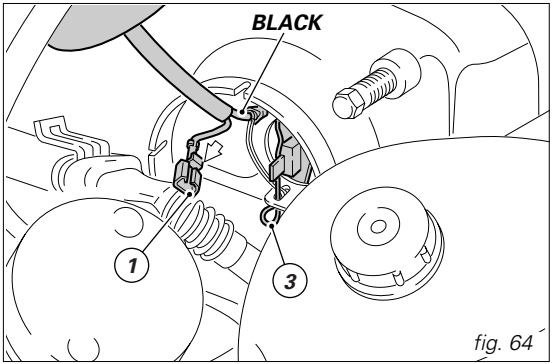

fig. 64

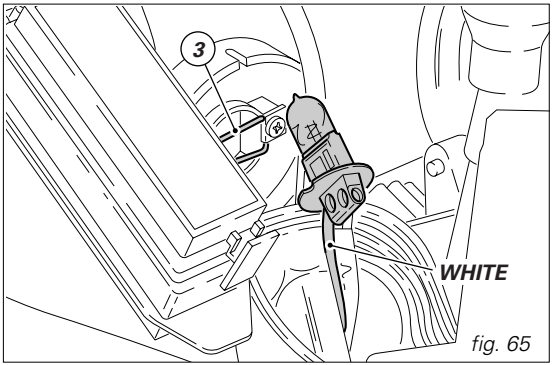

fig. 65

E

Reassembly

Insert the locating pegs of the bulb base into their seats to obtain correct alignment (fig. 66).
Hook the clip (3) to the headlamp holders; reconnect the cables and refit the rubber cover.

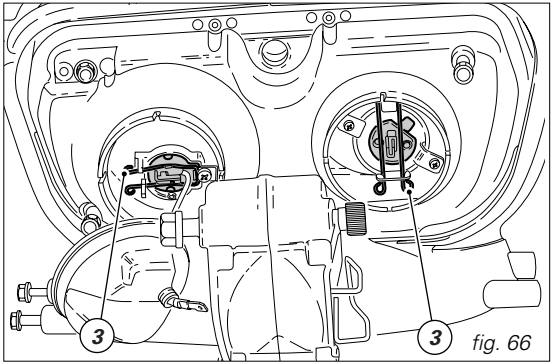

fig. 66

To change the parking light bulb, pull out the bulb holder (4, fig. 67) from the rear of headlamp first.
Remove the bulb and fit a new one.

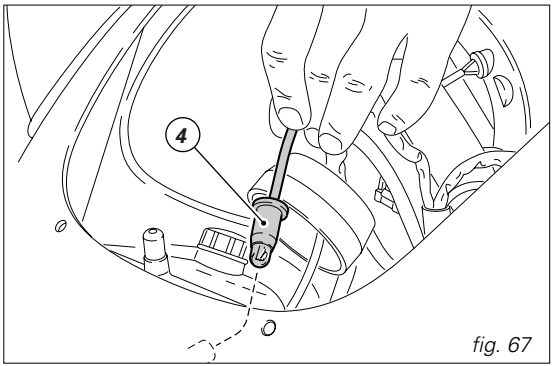

fig. 67

Instrument panel *(fig. 68)*
Remove the headlamp fairing to reach the instrument panel bulbs. Extract the lamp holder from behind the instrument and pull out the bulb from its holder to replace it. The bulb holder cables are numbered to avoid confusion in the event more bulbs need replacing at the same time. Be sure to match the numbers marked on the connectors in the instrument panel.

Note
The bulb holders of the instrument panel lights have a tag (A) to aid removal without risking to tear the cables.

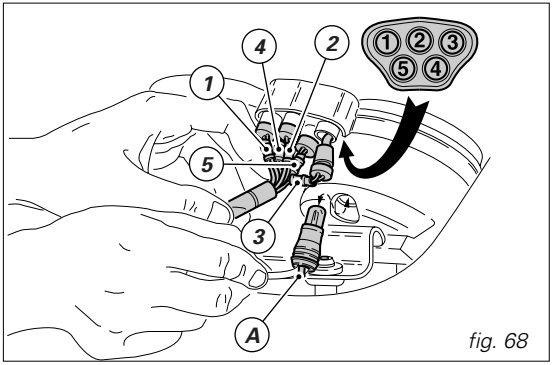

fig. 68

E

Turn indicators
The bulbs of the turn indicators are accessible after removing the instrument panel side guards.

Front:
Turn the bulb holder (1, fig. 69) anticlockwise and remove it from indicator body. Withdraw the burnt-out bulb and replace it.
Refit the bulb holder with the round slot pointing upward and turn it clockwise until it locks in place in the indicator body.

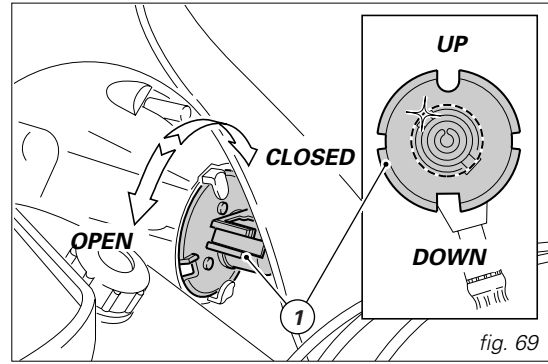

fig. 69

Rear:
remove the screw (2, fig. 70) and detach the glass (3) from the indicator body holder.
The bulb is of the banjo-type: press and rotate anti-clockwise to remove; fit the spare bulb by pressing and turning clockwise until it clicks.
Refit the glass sliding the small tab (A) into the suitable slot in the indicator body and tighten the screw (2).

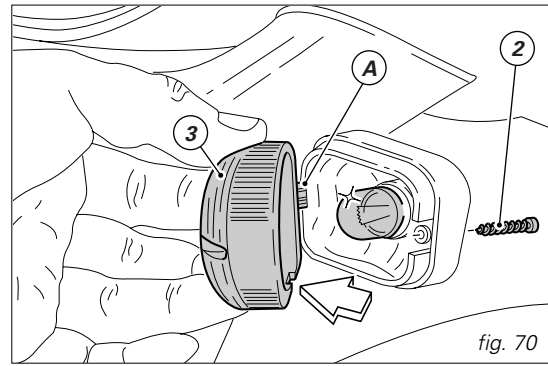

fig. 70

Number plate light
To expose the number plate bulb, withdraw the lamp holder from the number plate holder, then extract the bulb and replace it.

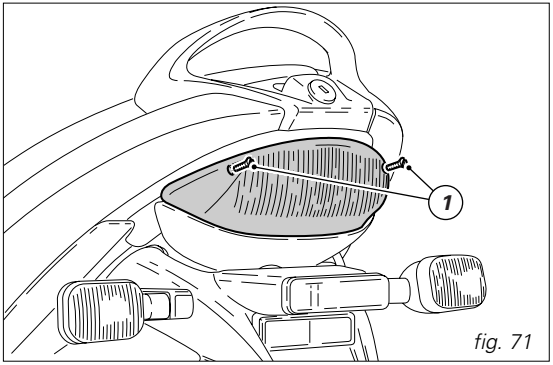

fig. 71

Stop light
To replace the stop and parking light bulb, unscrew the two screws (1, fig. 71) that secure the glass and remove glass. The bulb is of the banjo-type: press and rotate anti-clockwise to remove; fit the spare bulb by pressing and turning clockwise until it clicks (fig. 72). Refit the glass and tighten the screws (1).

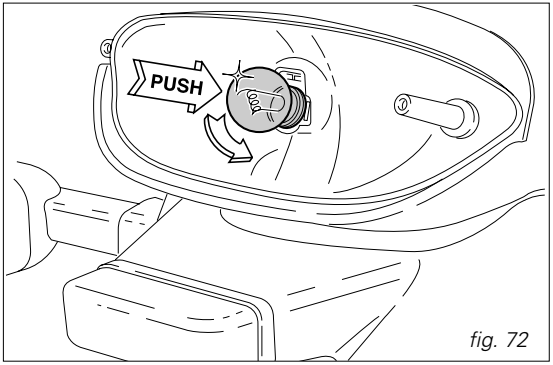

fig. 72

E

Beam setting *(fig. 73)*
When checking beam setting, put the motorcycle upright. Tyres should be inflated at the correct pressure and one person should be sitting astride the motorcycle, keeping it at right angles to its longitudinal axis. Place the motorcycle opposite a wall or a screen, 10 meters apart from it, then draw a horizontal line dictated by headlamp center and a vertical one in line with the longitudinal axis of motorcycle.
If possible, perform this check in dim light.
Switch on the low beam. The height of the light spot (measured at the upper limit between dark and lighted-up area) should not exceed 9/10th of the height from ground of headlamp center.

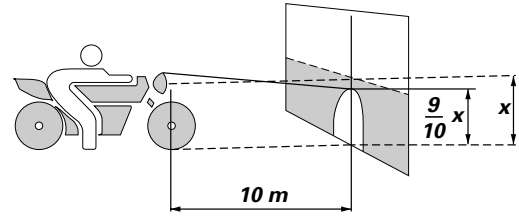

fig. 73

Note
The procedure described here is in compliance with the "Italian Standard" establishing the maximum height of the light beam. Owners in other countries will adapt said procedure to the provisions in force in their countries.

E

The height of the light beam can be corrected using the screw (1, fig. 74) on the left side of the headlamp. Remove the left side guard of the instrument panel to expose the screw. Turn the screw anticlockwise to lower the beam, clockwise to raise it.

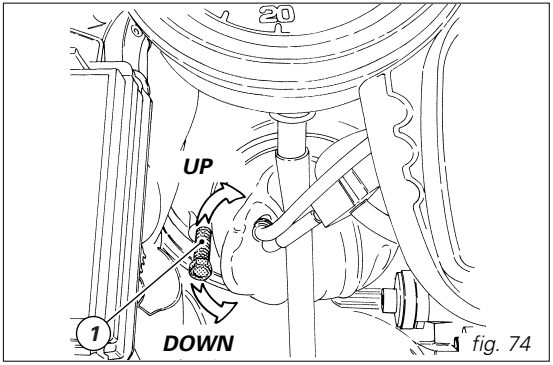

fig. 74

The side position of the headlamp is adjusted using the adjusting screw (2, fig. 75) on the right side of headlamp. Remove the right side guard of the instrument panel (see page 50) to expose the screw. Turn the screw anticlockwise to move the beam to the right, clockwise to move it to the left.

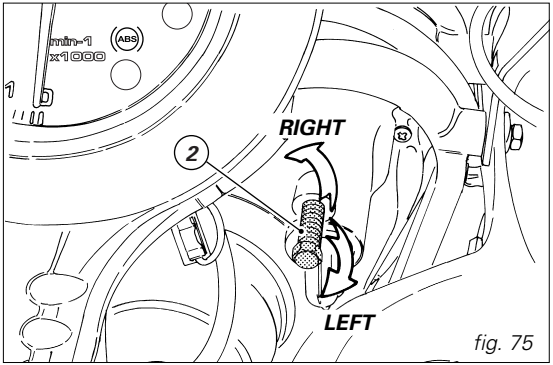

fig. 75

E

E

Tyres

Tyre pressure
Rider + luggage
Front:
2.1 bar - 2.3 Kg/sq cm
Rear:
2.2 bar - 2.4 Kg/sq cm

Rider + passenger + luggage
Front:
2.4 bar - 2.5 Kg/sq cm
Rear:
2.8 bar - 2.9 Kg/sq cm

As tyre pressure is affected by temperature and altitude variations, you are advised to check and adjust it whenever you are riding in areas where ample variations in temperature or altitude occur.

Important
Check and set tyre pressure when tyres are cold. To avoid front wheel rim distortion, when riding on bumpy roads, increase front tyre pressure by 0.2 - 0.3 bar.

Tyre repair or replacement
In the event of a tiny puncture, tubeless tyres will take a long time to deflate, as they tend to keep air inside. If you find low pressure on one tyre, check the tyre for punctures.

Warning
A tyre must be replaced when punctured. Replace tyres with recommended standard tyres only.
Be sure to tighten the valve caps securely to avoid leaks when riding. Never use tube type tyres. Failure to heed this warning may lead to sudden tyre bursting and to serious danger to rider and passenger.

After replacing a tyre, the wheel must be balanced.

Important
Do not remove or shift the wheel balancing weights.

Warning
Have the tyres replaced at a Dealer or Authorized Workshop. Correct removal and installation of the wheels is essential, as some parts of the ABS (such as sensors and phonic wheels) are mounted to the wheels and require specific adjustment.

Minimum tread depth

Measure tread depth (S, fig. 76) at the point where tread is most worn down. It should not be less than 2 mm and anyway not below the legal limit.

Important

Visually inspect the tyres at regular intervals for detecting cracks and cuts, especially on the side walls, bulges or large spots that are indicative of internal damage. Replace them if badly damaged.
Remove any stones or other foreign bodies caught in the tread.

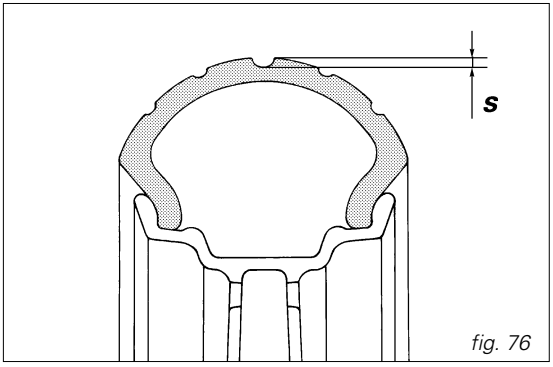

fig. 76

E

Checking engine oil level *(fig. 77)*
Engine oil level can be checked through the sight glass (1) provided on the clutch cover.
When checking oil level, the motorcycle should be upright and the engine warm.
Allow a few minutes for oil to settle to a steady level after stopping the engine.
Oil level should be between the marks on the sight glass.
Top up oil level with SHELL Advance Ultra 4, if low.
Undo the filler plug (2) and top up to correct level.
Refit the plug.

E

Important
Engine oil and oil filters must be changed by a Ducati dealer or authorized workshop at regular intervals, as specified in the routine maintenance chart (see Warranty Card).

Viscosity
SAE 10W-40
The other viscosity degrees indicated in the table can be used if the local average temperature is within the limits specified for that oil viscosity.

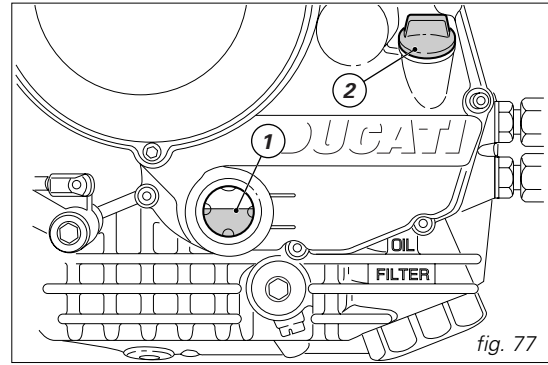

fig. 77

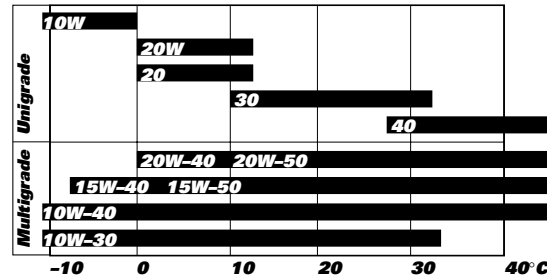

Cleaning and replacing the spark plugs *(fig. 78)*
Spark plugs are essential to smooth engine running and should be checked at regular intervals. This is done quite easily and quickly and provides a good measure of engine condition.
Remove the l.h. fairing, remove the spark plug caps and spark plugs from the cylinder head using the wrench supplied with the bike.
Check the color of the insulating ceramic material of the central electrode: a light brown, even color is a sign of good engine condition. If color has altered or you find any dark deposits, change the spark plug and report this to your Dealer or authorized workshop.
Check wear on the central electrode. If it looks worn out or has a vitreous appearance, change the spark plug.
Check electrode gap: it should be 0.6-0.7 mm.

Important
If the gap needs adjusting, be very careful when bending the side electrode. If gap is too wide or too close, engine performance will be affected. This could also cause difficult starting or irregular idling.
Clean the electrode and the insulating material accurately using a small metal brush and check seal condition.
Clean the seat in the cylinder head. Be careful not to let any foreign matters fall into the combustion chamber.
Refit spark plug into cylinder head. Snug it finger-tight until it is fully seated into the head. Tighten the spark plug to 20 Nm.

If you do not have a torque wrench, you can use the wrench supplied with the tool kit to tighten the spark plug an additional 1/2 turn.

Important
Never use spark plugs with a heat rating other than recommended or a thread length other than standard. Spark plugs should be tightened properly.

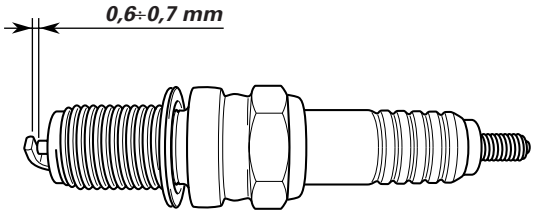

fig. 78

E

Cleaning the motorcycle

To preserve the finish of metal parts and paintwork, wash and clean your motorcycle at regular intervals, anyway according to the road conditions you ride in. Use specific products only. Prefer biodegradable products. Avoid aggressive detergents or solvents.

E

Important

Do not wash your motorcycle right after use. When the motorcycle is still hot, water drops will evaporate faster and spot hot surfaces.
Never clean the motorcycle using hot or high-pressure water jets.
Cleaning the motorcycle with water cleaners may lead to seizure or severe failure of front fork, wheel hub assembly, electric system, front fork seals, air inlets or exhaust silencers and adversely affect the operation of motorcycle safety features.
Clean off stubborn dirt or exceeding grease from engine parts using a degreasing agent. Be sure to avoid contact with drive parts (chain, sprockets, etc.)
Rinse with warm water and dry all surfaces with chamois leather.

Warning

Braking performance may be impaired immediately after washing the motorcycle.
Never grease or lubricate the brake discs. Loss of braking and further accidents may occur. Clean the discs with an oil-free solvent.

Storing the bike away

If the motorcycle is to be left unridden over long periods, it is advisable to carry out the following operations before storing it away:
clean the motorcycle;
undo the drain plug with its seal and empty the fuel tank;
pour a few drops of engine oil into the cylinders through the spark plug seats, then crank the engine by hand a few times so a protective film of oil will spread on cylinder inner walls;
place the motorcycle on the service stand;
remove the battery and keep it well charged and efficient. Battery should be checked and charged whenever the motorcycle has been left unridden for over a month;
protect the motorcycle with a suitable canvas available from Ducati Performance. This will protect paintwork and let condensate breathe out.

Important notes

Some countries, such as France, Germany, Great Britain, Switzerland, etc. have compulsory emission and noise standards that include mandatory inspections at regular intervals.
It is the Owner's responsibility to have any parts not in compliance with the standards in force in his/her country replaced with Ducati original spare parts complying with local law.

E

Overall dimensions *(mm) (fig. 79)*

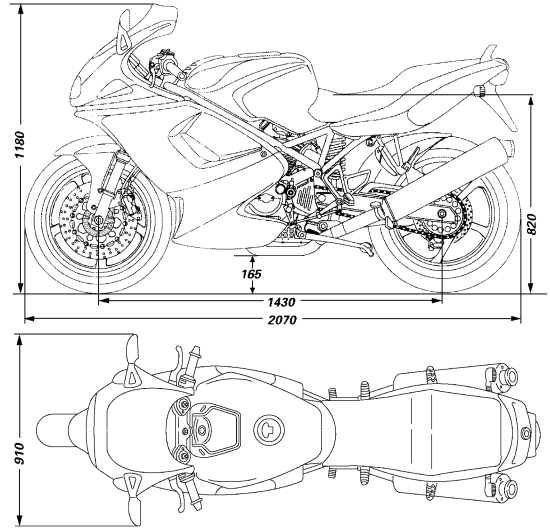

fig. 79

Weights
Dry weight:
217 Kg.
Carrying full load:
420 Kg.

Warning
Failure to observe weight limits could result in poor handling and impair the performance of your motorcycle, and you may lose control of the motorcycle.

Top-ups	**Type of fluid**	**cu dm(liters)**
Fuel tank, including a reserve of 6 cu dm (liters).	Unleaded fuel 95 fuel octane rating (at least)	21
Oil sump and oil filter	SHELL Advance Ultra 4	3.7
Front/Rear brake and clutch circuits	Special fluid for hydraulic systems SHELL-Advance Brake DOT 4	—
Protectant for electric contacts	Spray for electric systems SHELL-Advance Contact Cleaner	—
Front fork	SHELL-Advance Fork 7.5 or Donax TA	0.492 (each leg)
Cooling circuit	Antifreeze SHELL – Advance Coolant or Glycoshell 35-40% + water	3.5

Important
Additives to fuel or lubricants are not allowed.

E

E

Engine
Twin cylinder, four-stroke, 90° "L" type, longitudinal.
Bore:
98 mm
Stroke:
66 mm
Total displacement:
996 c.c.
Compression ratio:
11.5±0.5:1
Max. power at crankshaft (95/1/EC):
86 kW – 117 HP at 8750 rpm
Max torque at crankshaft (95/1/EC):
10 kgm at 7000 rpm
Max. rotation speed
10,000 rpm

Important
Do not exceed specified rotation speed limits under any running condition.

Timing system
Desmodromic *(type) with four valves per cylinder, operated by eight rockers (4 opening rockers and 4 closing rockers) and two overhead camshafts. It is operated by the crankshaft through spur gears, belt rollers and toothed belts.*

Desmodromic timing system *(fig. 80)*
1) Opening (or upper) rocker.
2) Opening rocker shim.
3) Split rings.
4) Closing (or lower) rocker shim.
5) Return spring for lower rocker.
6) Closing (or lower) rocker.
7) Camshaft.
8) Valve.

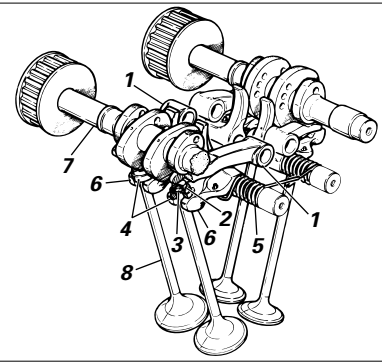

fig. 80

Performance data
Maximum speed in any gear should be reached only after a correct running-in period with the motorcycle properly serviced at the recommended intervals.
Max. speed (rider alone):
255 Km/h.

Spark plugs
Make:
CHAMPION
Type:
RA 59 GC.

Frame
Tubular trellis frame with upper section made of high-strength steel.
Steering angle (on each side):
30°
Headstock angle:
24°
Trail:
102 mm

Wheels
Five-spoke, light-alloy rims.

Front wheel
Dimensions:
3.50x17"

Rear wheel
Dimensions:
5.50x17"
Both wheel shafts can be removed.

Tyres

Front tyre
Tubeless, radial tyre.
Size:
120/70-ZR17.

Rear tyre
Tubeless, radial tyre.
Size:
180/55-ZR17.

Brakes

ABS

Separate-action anti-lock brake system operated by sensors mounted to each wheel, with phonic wheel detection.

Front brake

With double drilled disc.
Material:
steel
Disc diameter:
320 mm
Hydraulically operated by a control lever on right handlebar.
Braking surface:
88 sq cm
Brake calipers with separate pistons.
Make:
BREMBO
Type:
30/34-4 pistons
Friction material:
TOSHIBA TT2802.
Master cylinder type:
PS 16.

Rear brake

With fixed drilled steel disc.
Disc diameter:
245 mm
Hydraulically operated by a pedal on RH side.
Braking surface:
25 sq cm
Brake calipers with separate pistons.
Make:
BREMBO
Type:
P 34.
Friction material:
FERIT I/D 450 FF
Master cylinder type:
PS 11.

Warning
Brake fluid can dissolve paintwork and cause severe eye and skin injuries in the event of accidental spilling. Wash the affected area with abundant running water.

Transmission

Dry clutch operated by a control lever on left handlebar.
Drive is transmitted from engine to gearbox main shaft via spur gears.
Gear ratio:
32/59.
6-speed gearbox with constant mesh gears, gear change pedal on left side of motorcycle.
Front/rear sprocket ratio:
15/38.
Total gear ratios:
1st gear 15/37
2nd gear 17/30
3rd gear 20/27
4th gear 22/24
5th gear 24/23
6th gear 28/24

Drive chain from gearbox to rear wheel:
Make:
DID
Type:
525 HV.
Size:
5/8"x5/16"
Links:
102

Important

The above gear ratios are the homologated ones and under no circumstances must they be modified.

If you wish to tune up your motorcycle for competitive trials, you may refer to Ducati Motor Holding S.p.A. who will be glad to provide information about the special ratios available. Relevant instructions and original spare parts are available from your local Dealer or authorized workshop.

Warning

If the rear sprocket needs replacing, contact a Ducati Dealer or an authorized workshop. If improperly replaced, this component could seriously endanger your safety and that of your passenger, and cause irreparable damage to your motorcycle.

E

Suspensions

Front

Hydraulic upside-down fork provided with outer adjuster for rebound, compression, and preload (for inner springs of fork legs).
Stanchion diameter: 43 mm
Travel along leg axis: 130 mm

Rear

Of the progressive type, thanks to a rocker arm connecting frame and upper pivot point of the shock absorber. The shock absorber - with separated reservoir - enables the adjustment of rebound and compression damping and spring preload. At the bottom pivot point it is connected to a steel swingarm. The swingarm hinges on a pivot pin passing through the engine. The whole system gives the bike excellent stability.
Travel: 65 mm
Rear wheel travel: 148 mm

Exhaust system

Catalyzed as per Euro 2 standard.

Available colours

Ducati anniversary red 473.101
Ducati yellow 473.201
Ducati iron grey 291.600
Ducati metallic dark grey 653.6047 with metal-color frame and red rims.

Electric system

Basic electric items are:
***Headlamp** consisting of the following:*
***12V-55W** low beam unit, poly-ellipsoidal with capacitor;*
12V-55W high beam unit
12V-5W parking light.
***Instrument panel, 12V-1.2W** warning lights; **12V-2W** and **3W** instrument lights.*
***Electrical controls** on handlebar.*
***Turn indicators, 12V-10W** bulbs.*
Horn.
Stop light switches.
Battery 12V-10 Ah.
Generator 12V-520W.
***Electronic voltage regulator** (rectifier), protected by a **40 A** fuse.*
Starter motor, 12V-0.7 kW.
***Tail light, 12V-5/21W** double-filament bulb for stop light and parking light; **12V-5W** bulb for number plate light.*

Note

See “Replacing bulbs” on page 62 for relevant instructions.

Fuses

The main fuse box (fig. 81) is located on the frame left side, behind the headlamp.
To access the fuse box, remove the left side guard of the instrument panel (see page 50).
To expose the fuses, take off the box protective cover (1). Mounting position and ampere capacity are marked on box cover.
7 fuses are connected to the system. There is one spare fuse.

Three fuses (2 fig. 82) located under the seat protect the ABS. Remove the caps (3) to expose the fuses.

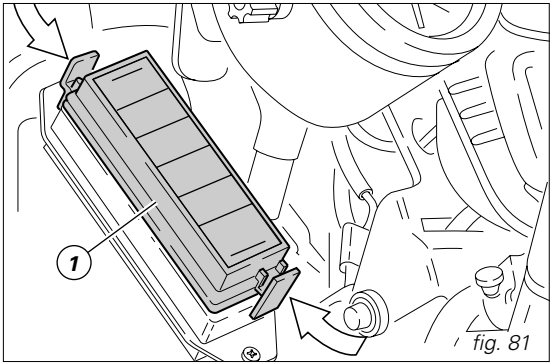

fig. 81

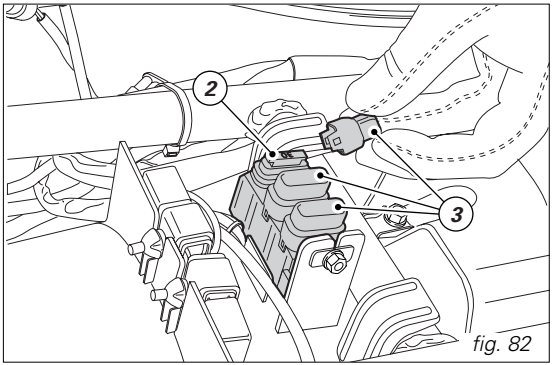

fig. 82

E

The fuse located on a side of the battery (fig. 83) protects the electronic regulator. Remove the fuse cap (4) to expose it.
A blown fuse is identified by the interrupted inner filament (5, fig. 84).

Important
*Switch the ignition key to **OFF** before replacing the fuse to avoid possible short circuits.*

E

Warning
Never use a fuse with a rating other than specified. Failure to observe this rule may damage the electric system or even lead to fire.

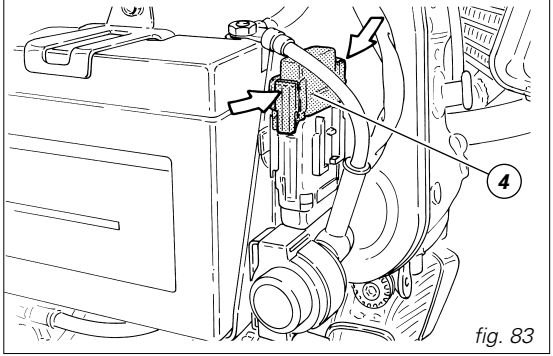

fig. 83

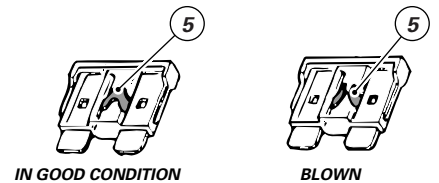

fig. 84

Legend of the wiring diagram of electric system/injection

1) Immobilizer aerial
2) Right switch
3) Main relay
4 Fuse box
5) Immobilizer CPU
6) Ignition key unit
7) Starter motor
8) Solenoid starter
9) Battery
10) Fan
11) Rear right-turn indicator
12) Tail light
13) Number plate light
14) Rear left-turn indicator
15) 12V power outlet
16) Fuel tank
17) Self-diagnosis
18) ABS diagnosis
19) CPU diagnosis
20) Horizontal cylinder coil
21) Vertical cylinder coil
22) Horizontal cylinder spark plug
23) Vertical cylinder spark plug
24) Horizontal cylinder injector
25) Vertical cylinder injector
26) Throttle position sensor
27) Engine rpm/timing sensor
28) CPU coolant temperature sensor
29) 5.9M CPU
30) ABS rear sensor
31) ABS front sensor
32) ABS control unit
33) ABS fuses
34) Instr. panel coolant temp.sensor
35) Regulator fuse
36) Regulator
37) Generator
38) Stand light switch
39) Neutral light switch
40) Oil pressure switch
41) Rear stop light switch
42) Front stop light switch
43) Air pressure/temperature sensor
44) Turn indicator flasher
45) Left switch
46) Instrument panel
47) Lights relay
48) Front left-turn indicator
49) Headlamp
50) Front right-turn indicator
51) Horn
52) Fan relay
53) Injection relay
54) Power outlet fuse
55) Clutch switch

Wire color coding
P *Pink*
G *Green*
W *White*
O *Orange*
Y *Yellow*
B *Blue*
Bn *Brown*
R *Red*
V *Violet*
Gr *Grey*
Lb *Light blue*
Bk *Black*

E

Note
The system wiring diagram is at the end of this manual.

Legend of fuse box

Pos.	*Description*	*Rat.*
1-9	*Main switch*	*30 A*
2-10	*Parking lights, high and low beam*	*15 A*
3-11	*Stop, horn, turn indicators instrument panel pilot lights and fan*	*20 A*
4-12	*ECU*	*3 A*
5-13	*Key-on*	*10 A*
6-14	*Injection*	*20 A*
7-15	*Display*	*3 A*
8-16		*30 A*

FOR UNITED STATES OF AMERICA VERSION ONLY

Reporting of safety defects

If you believe that your vehicle has a defect which could cause a crash or could cause injury or death, you should immediately inform the National Highway Traffic Safety Administration (NHTSA) in addition to notifying Ducati North America. If NHTSA receives similar complaints, it may open an investigation, and if it finds that a safety defect exists in a group of vehicles, it may order a recall and remedy campaign. However, NHTSA cannot become involved in individual problems between you, your dealer, or Ducati North America. To contact NHTSA, you may either call the Auto Safety Hotline toll-free at 1-800-424-9393 (or 366-0123 in Washington, D.C. area) or write to: NHTSA, U.S. Department of Transportation, Washington, D.C. 20590. You can also obtain other information about motor vehicle safety from the Hotline.

Safety warnings

Traffic Rules vary from jurisdiction to jurisdiction. Know the regulations in your jurisdiction before riding this motorcycle.

Warning

This motorcycle is designed and intended for use on streets and other smooth, paved areas only. Do not use this motorcycle on unpaved surfaces. Such use could lead to upset or other accident.

Noise emission warranty

Ducati Motor S.p.A. warrants that this exhaust system, at the time of sale, meets all applicable U.S. EPA Federal noise standards. This warranty extends to the first person who buys this exhaust system for purposes other than resale, and to all subsequent buyers. Warranty claims should be directed to: Ducati North America, Inc., 237 West Parkway, Pompton Plains, New Jersey, 07444-1028 Tel: 001.973.839-2600 • Fax: 001.973.839-2331.

Noise and exhaust emission control system information

Source of Emissions

The combustion process produces carbon monoxide and hydrocarbons. Control of hydrocarbons is very important because under certain conditions, they react to form photochemical smog when subjected to sunlight. Carbon monoxide does not react in the same way, but is toxic. Ducati utilizes lean carburetor settings and other systems to reduce carbon monoxide and hydrocarbons.

Exhaust Emission Control System

The Exhaust Emission Control System is composed of lean carburetor settings, and no adjustments should be

made except idle speed adjustments with the throttle stop screw. The Exhaust Emission Control System is separate from the crankcase emission control system.

Crankcase Emission Control System

The engine is equipped with a closed crankcase system to prevent discharging crankcase emissions into the atmosphere. Blow-by gas is returned to the combustion chamber through the air cleaner and the throttle body.

Evaporative Emission Control System

California motorcycles are equipped with an evaporative emission control system which consists of a charcoal canister and associated piping. This system prevents the escape of fuel vapors from the throttle body and fuel tank.

Tampering warning

Tampering with Noise Control System Prohibited. Federal Law prohibits the following acts or causing thereof:

(1) the removal or rendering inoperative by any person, other than for purposes of maintenance, repair, or replacement, of any device or element of design incorporated into any new vehicle for the purpose of noise control prior to its sale or delivery to the ultimate purchaser or while it is in use; or

(2) the use of the vehicle after such device or element of design has been removed or rendered inoperative by any person.

Among those acts presumed to constitute tampering are the acts listed below:

(1) Removal of, or puncturing the muffler, baffles, header pipes or any other component which conducts exhaust gases.

(2) Removal or puncturing of any part of the intake system.

(3) Lack of proper maintenance.

(4) Replacing any moving part of the vehicle, or parts of the exhaust or intake system, with parts other than those specified by the manufacturer.

This product should be checked for repair or replacement if the motorcycle noise has increased significantly through use. Otherwise, the owner may become subject to penalties under state and local ordinances.

Problems that may affect motorcycle emissions

If you are aware of any of the following symptoms, have the vehicle inspected and repaired by your local Ducati dealer.

Symptoms:

Hard starting or stalling after starting.

Rough idle.

Misfiring or backfiring during acceleration.

After-burning (backfiring).

Poor performance (driveability) and poor economy.

Riding safety

The points given below are applicable for every day motorcycle use and shoud be carefully observed for safe and effective vehicle operation.
A motorcycle does not provide the impact protection of an automobile, so defensive riding in addition to wearing protective apparel is extremely important.
Do not let protective apparel give you a false sense of security.
Before changing lanes, look over your shoulder to make sure the way is clear. Do not rely solely on the rear view mirror; you may misjudge a vehicle's distance and speed, or you may not see it at all.
When going up steep slopes, shift to a lower gear so that there is plenty of power to spare rather than overloading the engine.
When applying the brakes, use both the front and rear brakes. Applying only one brake for sudden braking may cause the motorcycle to skid and lose control.
When going down long slopes, control vehicle speed by closing the throttle. Use the front and rear brakes for auxiliary braking.
Riding at the proper rate of speed and avoiding unnecessarily fast acceleration are important not only for safety and low fuel consumption but also for long vehicle life and quieter operation.
When riding in wet conditions or on loose roadway surfaces, the ability to maneuver will be reduced. All of your actions should be smooth under these conditions. Sudden acceleration, braking or turning may cause loss of control.
When the roadway is wet, rely more on the throttle to control vehicle speed and less on the front and rear brakes.
The throttle should also be used judiciously to avoid skidding the rear wheel from too rapid acceleration or deceleration.
On rough roads, exercise caution, slow down, and grip the fuel tank with your knees for better stability.
When quick acceleration is necessary as in passing, shift to a lower gear to obtain the necessary power.
Do not down shift at too high an r.p.m. to avoid damage to the engine from overreving.
Avoiding unnecessary weaving is important to the safety of both the rider and other motorists.
Do not exceed the legal speed limit or drive too fast for existing conditions. High speed increases the influence of any condition affecting stability and the loss of control.
Operate motorcycle only at moderate speed and out of traffic until you have become thoroughly familiar with its operation and handling characteristics under all conditions. This is a very high performance motorcycle, designed and intended for use by experienced careful riders only!
A new motorcycle must be operated according to a special break-in procedure (see Running in recommendations).

⚠ *Warning*

Before starting engine, check for proper operation of brake, clutch, shifter, throttle controls, correct fuel and oil supply.

Gasoline is extremely flammable and is explosive under certain conditions. Refuell in a well ventilated area with the engine stopped. Do not smoke or allow open flames or sparks when refuelling or servicing the fuel system. Always close the fuel petcock when the engine is not running to prevent flooding of the throttle body. Do not overfill fuel tank (see instructions page 47).
Motorcycle exhaust contains poisonous carbon monoxide gas. Do not inhale exhaust gases and never run the engine in a closed garage or confined area.
Use only Ducati approved parts and accessories.
This motorcycle was not intended to be equipped with a sidecar or to be used to tow any trailer or other vehicle. Ducati does not manufacture sidecars or trailers and cannot predict the effects of such accessories on handling or stability, but can only warn that the effects will be adverse and any damage to motorcycle components caused by the use of such accessories will not be remedied under warranty.

Warning
Do not ride the motorcycle with helmets attached to the hook; the helmets could cause an accident by distracting the operator or interfering with normal vehicle operation.

Protective apparel
Always wear a helmet. Most motorcycle accident fatalities are due to head injuries.
For safety eye protection, gloves, and high top, sturdy boots should also be worn.

The exhaust system becomes very hot during operation, never touch the exhaust system. Wear clothing that fully covers your legs. Do not wear loose clothing which could catch on the control levers, footrests, wheels, or chain. Any amount of alcohol will significantly interfere with your ability to safely operate your motorcycle. Don't drink and ride.

Vehicle identification number (VIN);
Every Ducati motorcycle is identified by two identification numbers (see page 10). Figure A specifically shows the frame identification numbers.
ST4s ABS specific identification no.

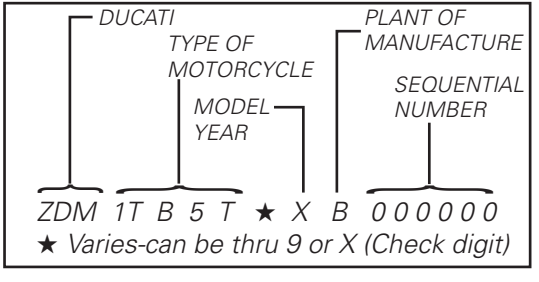

fig. A

Label location *(fig. B)*

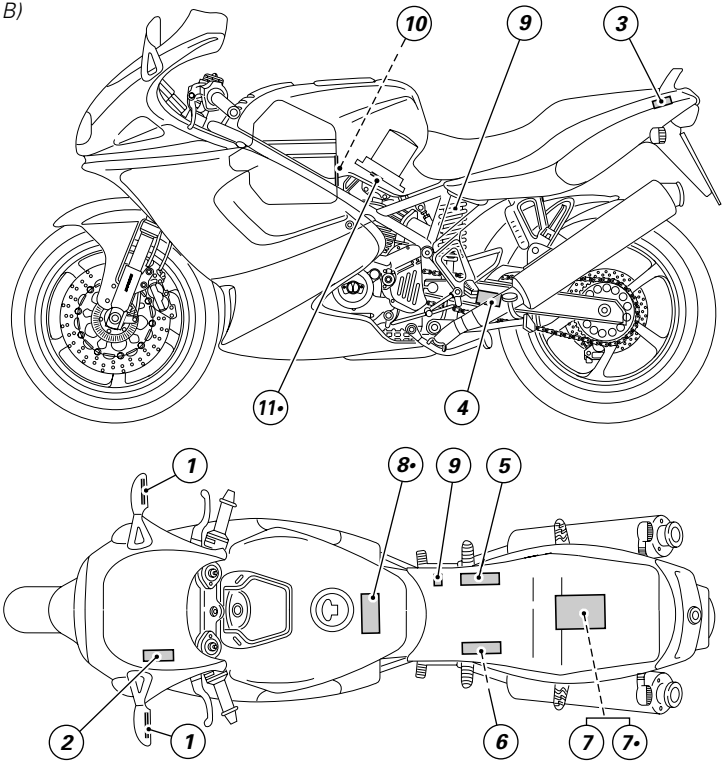

fig. B

OBJECT IN MIRROR ARE CLOSER THAN THEY APPEAR

Cod. 400 1 200 1A

1

WARNING

DO NOT ATTEMPT TO LOOK THROUGH THIS FAIRING. THIS IS NOT A WINDSHIELD, BUT AN AERODYNAMIC FAIRING ONLY. FAILURE TO OBSERVE THIS WARNING COULD RESULT IN A COLLISION OR UPSET AND CONSEQUENT SERIOUS BODILY INJURY.

Cod. 400 1 199 1A

2

HELMET HOLDER UNDER THE SEAT

3

Tensione catena (sul cavalletto centrale)
Chain Tension Adjustment (on centre stand)

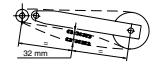

4

MOTORCYCLE NOISE EMISSION CONTROL INFORMATION

THIS [redacted] MOTORCYCLE, [redacted]
MEETS EPA NOISE EMISSION REQUIREMENTS OF 8[redacted]BA AT 46[redacted]PM BY THE FEDERAL TEST PROCEDURE.
MODIFICATIONS WHICH CAUSE THIS MOTORCYCLE TO EXCEED FEDERAL NOISE STANDARDS ARE PROHIBITED BY FEDERAL LAW.
SEE OWNER'S MANUAL.

Cod. 400 1 229 1A

5

Manufactured by **DUCATI** MOTOR spa DAT[redacted]7/97

GVWR: [redacted] Lbs ([redacted] kg)
GAWR front: [redacted] Lbs ([redacted] kg) with [redacted] tire, [redacted] RIM at [redacted] cold.
GAWR rear: [redacted] Lbs ([redacted] kg) with [redacted] tire, [redacted] RIM at [redacted] cold.
This vehicle conforms to all applicable Federal Motor Vehicle Safety standards in effect on the date of manufacture shown above. Type classification: Motorcycle

Vehicle I.D. No.: ZDM1TB9PXWB000001

Cod. 400 1 234 1A

6

VEHICLE EMISSION CONTROL INFORMATION

Engine displacement: 944 cc
Engine family: WDUCC0944ST2
Engine exhaust control system: [redacted]

THIS VEHICLE CONFORMS TO U.S. EPA REGULATIONS APPLICABLE TO 1998 MODEL YEAR NEW MOTORCYCLES

ENGINE TUNE-UP SPECIFICATIONS

ITEM	SPECIFICATIONS	INSTRUCTIONS
IGNITION TIMING:	[redacted] bTDC at idle speed	No adjustment
IDLE SPEED (RPM):	[redacted] ± 0.12 mm	No adjustment
IDLE MIXTURE:		No adjustment
	Opening [redacted] mm	
VALVE CLEARANCE (in & ex):		See Service Manual
	Closing [redacted] mm	

SPARK PLUG: CHAMPION [redacted]
SPARK PLUG GAP (mm): 0.5 ÷ 0.6
OIL: SAE 20W50
FUEL: Unleaded gasoline

DUCATI MOTOR spa - BOLOGNA - ITALY

7

VEHICLE EMISSION CONTROL INFORMATION

Engine displacement: 944 cc
Engine family: WDUCC0944ST2
Engine exhaust control system: [redacted]
Evap family: [redacted]

THIS VEHICLE CONFORMS TO U.S. EPA AND CALIFORNIA REGULATIONS APPLICABLE TO 1998 MODEL YEAR NEW MOTORCYCLES AND IS CERTIFIED TO 1.4 HC G/KM ENGINE FAMILY EXHAUST EMISSION STANDARD IN CALIFORNIA

ENGINE TUNE-UP SPECIFICATIONS

ITEM	SPECIFICATIONS	INSTRUCTIONS
IGNITION TIMING:	[redacted] bTDC at idle speed	No adjustment
IDLE SPEED (RPM):	[redacted] ± 0.12 mm	No adjustment
IDLE MIXTURE:		No adjustment
	Opening [redacted] mm	
VALVE CLEARANCE (in & ex):		See Service Manual
	Closing [redacted] mm	

SPARK PLUG: CHAMPION [redacted]
SPARK PLUG GAP (mm): 0.5 ÷ 0.6
OIL: SAE 20W50
FUEL: Unleaded gasoline

DUCATI MOTOR spa - BOLOGNA - ITALY

7●

CAUTION

NEVER FILL TANK SO FUEL LEVEL RISES INTO FILLER NECK. IF TANK IS OVERFILLED, HEAT MAY CAUSE FUEL TO EXPAND AND FLOW INTO EVAPORATIVE EMISSION CONTROL SYSTEM RESULTING IN HARD STARTING AND ENGINE HESITATION.

8●

WARNING

CONTAINS HIGHLY COMPRESSED GAS. USE ONLY PERFECTLY DRY NITROGEN GAS. OTHER GASES MAY CAUSE EXPLOSION. DO NOT

9

VEHICLE EMISSION CONTROL LABEL

ENGINE DISPLACEMENT : 944 cc. ENGINE FAMILY : [redacted]
THIS VEHICLE CONFORMS TO U.S. EPA AND CALIFORNIA REGULATIONS APPLICABLE TO 1998 MODEL YEAR NEW MOTORCYCLES.
EVAP FAMILY : [redacted]

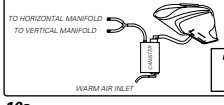

DUCATI MOTOR spa
Via A.C.Ducati,3
40132 BOLOGNA
ITALY

10●

11●

E

USA

California evaporation emission system

This system consists of (fig. C):
1) Warm air inlet;
2) Canister;
3) Dell'Orto jet;
4) Intake manifolds;
5) Breather pipe;
6) Fuel tank.

Important
In the event of fuel system malfunction, contact Ducati's authorized Service Centres.

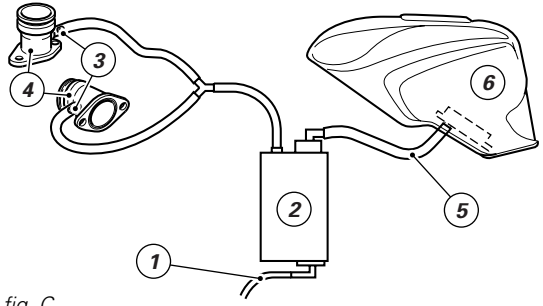

fig. C

Ducati limited warranty on emission control system

Ducati North America, Inc., 237 West Parkway, Pompton Plains, New Jersey 07444-1028 warrants that each new 1998 and later Ducati motorcycle, that includes as standard equipment a headlight, tail-light and stoplight, and is street legal:
A) is designed, built and equipped so as to conform at the time of initial retail purchase with all applicable regulations of the United States Environmental Protection Agency, and the California Air Resources Board; and
B) is free from defects in material and workmanship which cause such motorcycle to fail to conform with applicable regulations of the United States Environmental Protection Agency or the California Air Resources Board for a period of use, depending on the engine displacement,of 12,000 kilometers (7,456 miles), if the motorcycle's engine displacement is less than 170 cubic centimeters; of 18,000 kilometers (11,185 miles), if the motorcycle's engine displacement is equal to or greater than 170 cubic centimeters but less than 280 cubic centimeters; or of 30,000 kilometers (18,641 miles), if the motorcycle's engine displacement is 280 cubic centimeters or greater; or 5 (five) years from the date of initial retail delivery, whichever first occurs.

I. Coverage

Warranty defects shall be remedied during customary business hours at any authorized Ducati motorcycle dealer located within the United States of America in

compliance with the Clean Air Act and applicable regulations of the United States Environmental Protection Agency and the California Air Resources Board. Any part or parts replaced under this warranty shall become the property of Ducati.
In the state of California only, emissions related warranted parts are specifically defined by that state's Emissions Warranty Parts List. These warranted parts are: carburetor and internal parts; intake manifold; fuel tank, fuel injection system; spark advance mechanism; crankcase breather; air cutoff valves; fuel tank cap for evaporative emission controlled vehicles; oil filler cap; pressure control valve; fuel/vapor separator; canister; igniters; breaker governors; ignition coils; ignition wires; ignition points, condensers, and spark plugs if failure occors prior to the first scheduled replacement, and hoses, clamps, fittings and tubing used directly in these parts. Since emission related parts may vary from model to model, certain models may not contain all of these parts and certain models may contain functionally equivalent parts.
In the state of California only, Emission Control System emergency repairs, as provided for in the California Administrative Code, may be performed by other than an authorized Ducati dealer. An emergency situation occurs when an authorized Ducati dealer is not reasonably available, a part is not available within 30 days, or a repair is not complete within 30 days. Any replacement part can be used in an emergency repair. Ducati will reimburse the owner for the expenses, including diagnosis, not to exceed Ducati's suggested retail price for all warranted parts replaced and labor charges based on Ducati's recommended time allowance for the warranty repair and the geographically appropriate hourly labor rate. The owner may be required to keep receipts and failed parts in order to receive compensation.

II. Limitations
This Emission Control System Warranty shall not cover any of the following:
A. Repair or replacement required as a result of
(1) accident,
(2) misuse,
(3) repairs improperly performed or replacements improperly installed,
(4) use of replacement parts or accessories not conforming to Ducati specifications which adversely affect performance and/or
(5) use in competitive racing or related events.
B. Inspections, replacement of parts and other services and adjustments required for routine maintenance.
C. Any motorcycle on which odometer mileage has been changed so that actual mileage cannot be readily determined.

III. Limited liability
A. The liability of Ducati under this Emission Control Systems Warranty is limited solely to the remedying of defects in material or workmanship by an authorized Ducati motorcycle dealer at its place of business during customary business hours. This warranty does not cover inconvenience or loss of use of the motorcycle or

transportation of the motorcycle to or from the Ducati dealer. Ducati shall not be liable for any other expenses, loss or damage, whether direct, incidental, consequential or exemplary arising in connection with the sale or use of or inability to use the Ducati motorcycle for any purpose. Some states do not allow the exclusion or limitation of any incidental or consequential damages, so the above limitations may not apply to you.
B. No express emission control system warranty is given by Ducati except as specifically set forth herein. Any emission control system warranty implied by law, including any warranty of merchantability or fitness for a particular purpose, is limited to the express emission control systems warranty terms stated in this warranty. The foregoing statements of warranty are exclusive and in lieu of all other remedies. Some states do not allow limitations on how long an implied warranty lasts so the above limitation may not apply to you.
C. No dealer is authorized to modify this Ducati Limited Emission Control Systems Warranty.

IV. Legal rights
This warranty gives you specific legal rights, and you may also have other rights which vary from state to state.

V. *This warranty is in addition to the Ducati limited motorcycle warranty.*

VI. Additional information
Any replacement part that is equivalent in performance and durability may be used in the performance of any maintenance or repairs. However, Ducati is not liable for these parts. The owner is responsible for the performance of all required maintenance. Such maintenance may be performed at a service establishment or by any individual. The warranty period begins on the date the motorcycle is delivered to an ultimate purchaser.

Ducati North America, Inc..
237 West Parkway
Pompton Plains, New Jersey, 07444-1028
001.973.839-2600

ROUTINE MAINTENANCE RECORD

km/miles	Ducati Service Name	Mileage	Date
1,000			
10,000			
20,000			
30,000			
40,000			
50,000			

E

USA