HONDA

ATC SUPER RED 250

OWNER'S MANUAL

© HONDA MOTOR CO., LTD. 1985

Downloaded from www.Manualslib.com manuals search engine

IMPORTANT NOTICE

- **OPERATOR ONLY. NO PASSENGERS.**

  This vehicle is designed and constructed as an operator-only model. The vehicle load limit and seating configuration do not safely permit the carrying of a passenger.

- **FOR OFF-ROAD USE ONLY.**

  This vehicle is designed and manufactured for off-road use only.

- **READ THIS OWNER'S MANUAL CAREFULLY**

  Pay special attention to statements preceded by the following words:

WARNING

Indicates a strong possibility of severe personal injury or loss of life if instructions are not followed.

CAUTION:

Indicates a possibility of personal injury or equipment damage if instructions are not followed.

NOTE: Gives helpful information.

This manual should be considered a permanent part of the ATC and should remain with the ATC when resold.

Downloaded from www.Manualslib.com manuals search engine

HONDA ATC SUPER RED 250
OWNER'S MANUAL

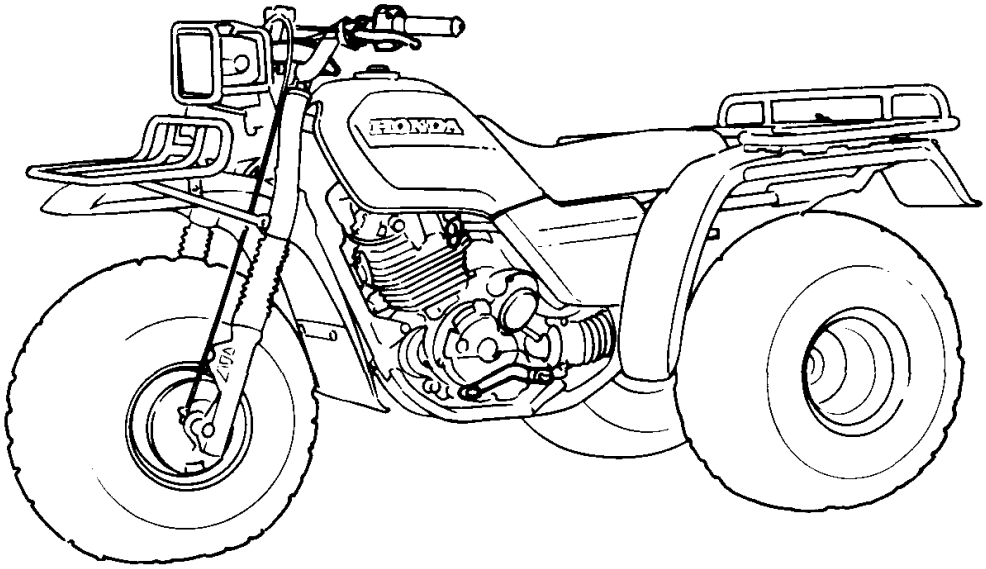

All information in this publication is based on the latest product information available at the time of approval for printing. HONDA MOTOR CO., LTD. reserves the right to make changes at any time without notice and without incurring any obligation.

No part of this publication may be reproduced without written permission.

© Honda Motor Co., Ltd. 1985

Downloaded from www.Manualslib.com manuals search engine

PREFACE

This booklet is your guide to the basic operation and proper maintenance of your new Honda ATC Super Red 250. Please take the time to read it carefully. Details necessary for riding the Honda ATC are given to acquaint the new owner with special riding techniques to be learned. When service is required, remember that your Honda dealer knows your vehicle best. If you have the required mechanical "know-how" and tools, your dealer can supply you with an official Honda Shop Manual to help you perform many maintenance and repair tasks.

Thank you for selecting a Honda. We wish you continued riding pleasure in the miles ahead.

Downloaded from www.Manualslib.com manuals search engine

CONTENTS

	Page
ATC SAFETY	1
Safe Riding Rules	2
Protective Apparel	2
Modifications	2
Loading and Accessories	3
DESCRIPTION	4
Parts Location	4
Serial Numbers	6
Parts Function	7
Fuel	20
Engine Oil	22
Tires	24
Battery	26
OPERATION	27
Pre-Ride Inspection	27
Starting the Engine	28
Break-in	31
Riding	32
Parking	41
MAINTENANCE	42
Maintenance Schedule	42
Tool Kit	44
Engine Oil and Filter	45
Fuel Strainer	46
Carburetor	47
High Altitude	48
Spark Plug	50
Air Cleaner	51
Valves	52
Clutch	54
Brakes	55
Throttle Cable	58
Final Drive Oil	59
STORAGE GUIDE	60
TRANSPORTING	62
SPECIFICATIONS	66
WIRING DIAGRAM	67

Downloaded from www.Manualslib.com manuals search engine

ATC SAFETY

WARNING

* ***ATC riding requires special efforts on your part to ensure your safety. Know these requirements before you ride.***
* ***Avoid riding on paved surfaces as handling can be seriously affected. If it is necessary, ride at reduced speeds and avoid sudden turns.***

SAFE RIDING RULES

* Always make a pre-ride inspection (page 27) before you start the engine. You may prevent an accident or equipment damage.
* Always obey local off-road riding laws and regulations.
* Obtain permission to ride on private property. Avoid posted areas and obey "no trespassing" signs.
* Know the terrain on which you are riding. If you are not familiar with the terrain, ride cautiously. Hidden rocks, holes or ravines could spell disaster.
* Your ability to operate the ATC safely is largely dependent upon your proper judgement.
* Do not use the flag pole bracket as a trailer hitch.
* When you select reverse gear, make sure there are no obstacles or people behind you. When it is safe to proceed, ride slowly.
* Alcohol drugs and ATC's don't mix. Even the smallest amount of alcohol can impair your ability to operate your ATC safely.
  Likewise, drugs, even if prescribed by a physician, can be dangerous while operating an ATC.
  Consult your doctor to be sure it is safe to operate a motor vehicle after taking medication.

PROTECTIVE APPAREL

* Most ATC accident fatalities are due to head injuries; ALWAYS wear a helmet. You should also wear a face shield or goggles, boots, gloves and protective clothing.
* The exhaust system becomes very hot during operation and it remains hot after operation. Never touch any part of the hot exhaust system. Wear clothing that fully covers your legs.

Downloaded from www.Manualslib.com manuals search engine

MODIFICATIONS

* Modification of the ATC, or removal of original equipment, may render the vehicle unsafe or illegal.

LOADING AND ACCESSORIES

WARNING

* ***To prevent an accident, use extreme care when adding and riding with accessories and cargo. Addition of accessories and cargo can reduce the ATC Super Red 250 stability, performance, and safe operating speed. Slow down (15 mph or less) when loaded with cargo or pulling a trailer.***

The combined weight of the rider, cargo, and all accessories must not exceed **170 kg (375 lbs)** which is the vehicle capacity load.

The following loading and towing capacity data is valid only when the riding terrain is level and flat. For different riding terrains, you must exercise your own judgement to load and ride the ATC safely. Never exceed the loading capacities given here.

1. Load cargo on the rear carrier as far forward as possible. Do not allow cargo to extend beyond the end of rear carrier.

Front carrier	**10 kg (22 lbs)**
Rear carrier	**45 kg (100 lbs)**
Storage compartment	**2.3 kg (5 lbs)**

2. When towing a trailer, care should be taken to maintain balance and stability. Place cargo in the trailer so that it will not cause the front wheel to lift off the ground during travel.

Tow weight (Trailer plus cargo weight)	**383 kg (850 lbs)**
Tongue weight (Weight on hitch point)	**14 kg (30 lbs)**

3. Do not obstruct the headlight beam with cargo.
4. Do not ride with a passenger on the rear.
   This ATC is not designed to carry a passenger.

Downloaded from www.Manualslib.com manuals search engine

PARTS LOCATION

(1) Front brake lever
(2) Throttle lever
(3) Reverse indicator lamp
(4) Neutral indicator lamp
(5) Reverse selector lever
(6) Rear brake lever/parking brake
(7) Fuel tank cap
(8) Rear carrier
(9) Front carrier
(10) Kickstarter pedal
(11) Oil filler cap

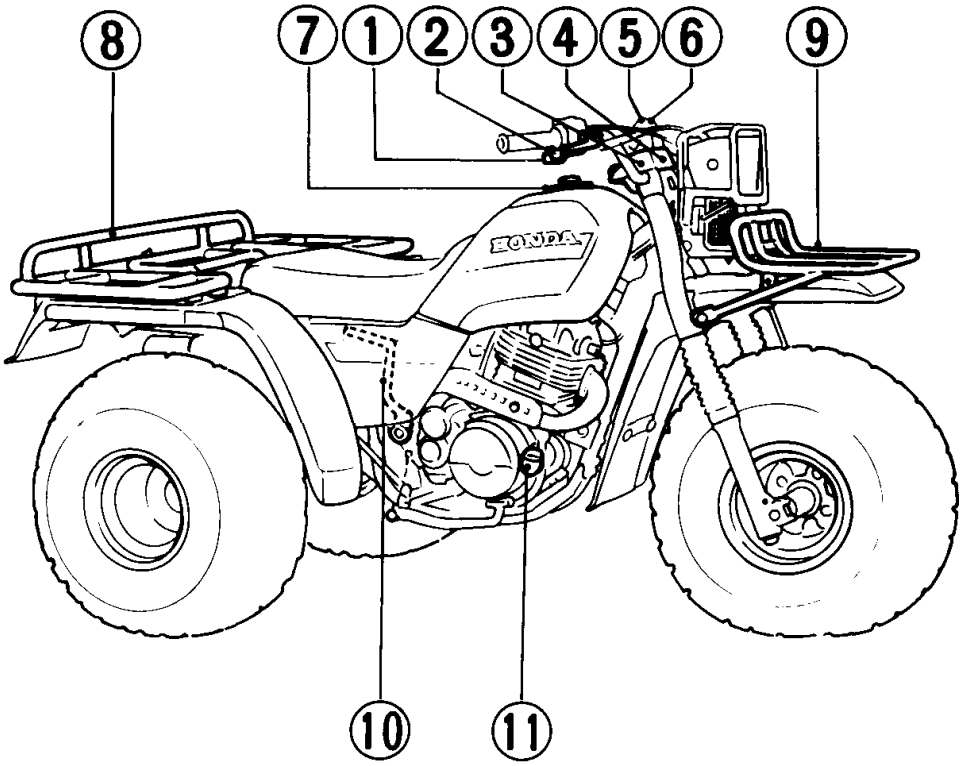

Downloaded from www.Manualslib.com manuals search engine

(12) Fuel valve
(13) Ignition switch
(14) Horn
(15) Headlight dimmer switch
(16) Headlight switch
(17) Engine stop switch
(18) Starter button
(19) Choke lever
(20) Gearshift pedal
(21) Handle lock/Helmet holder

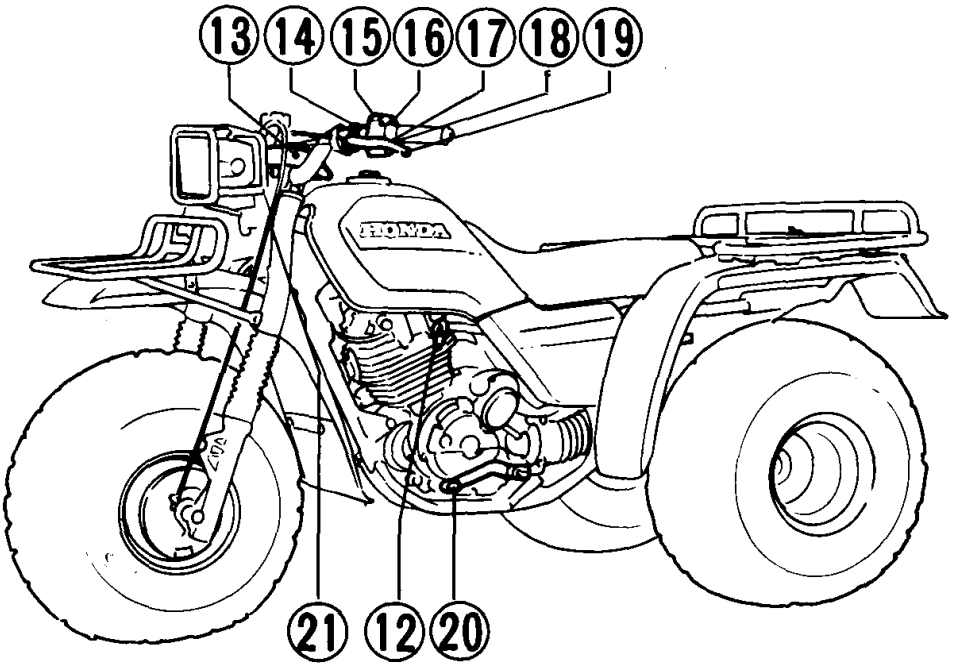

Downloaded from www.Manualslib.com manuals search engine

SERIAL NUMBERS

The frame and engine serial numbers are required by your dealer when ordering replacement parts. Record the numbers here for your reference.

The frame serial number (1) is stamped on the right side of the steering head. The engine serial number (2) is stamped on the right crankcase.

FRAME NO. _____

ENGINE NO. _____

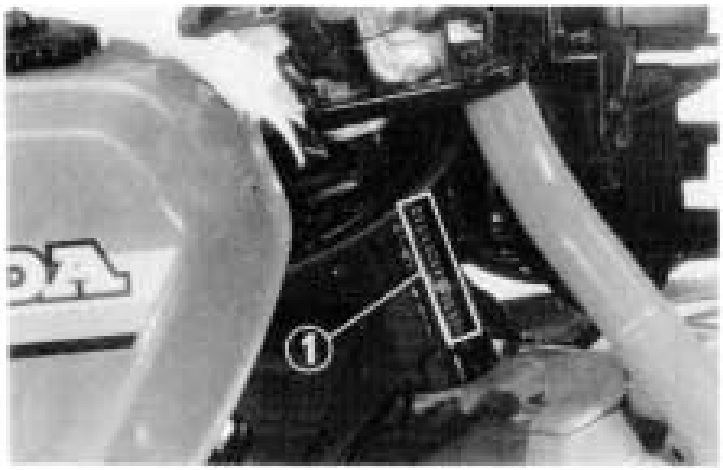

(1) Frame serial number

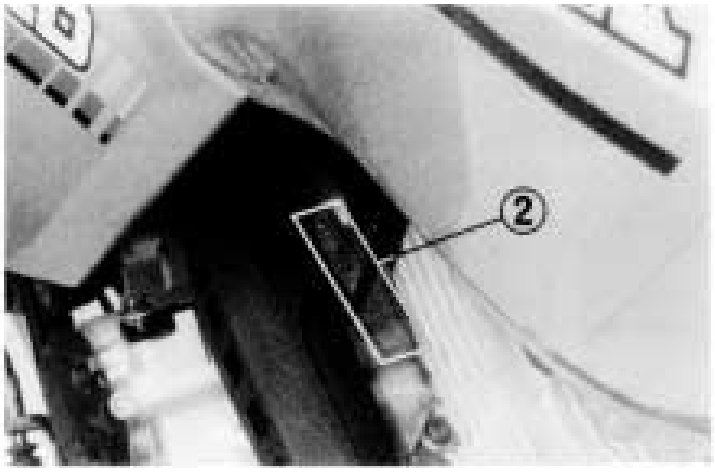

(2) Engine serial number

Downloaded from www.Manualslib.com manuals search engine

PARTS FUNCTION

Ignition Switch

The ignition switch (1) is on the handlebar upper holder.

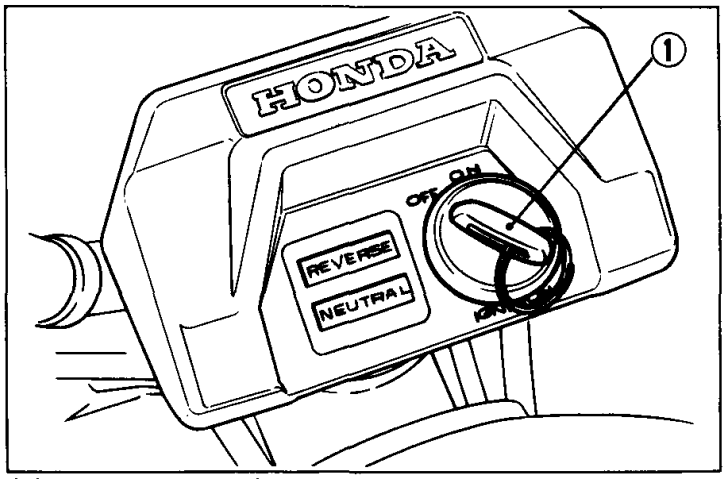

(1) Ignition Switch

Key Position	Function	Key Removal
OFF	Engine and headlight cannot be operated.	The key can be removed.
ON	Headlight can be turned on. With the engine stop switch at RUN and transmission in neutral, the engine can be started.	The key cannot be removed.

Downloaded from www.Manualslib.com manuals search engine

Starter Button

The starter button (1) is below the headlight switch. When the starter button is pressed, with the transmission in neutral and the ignition switch on, the starter motor will crank the engine.

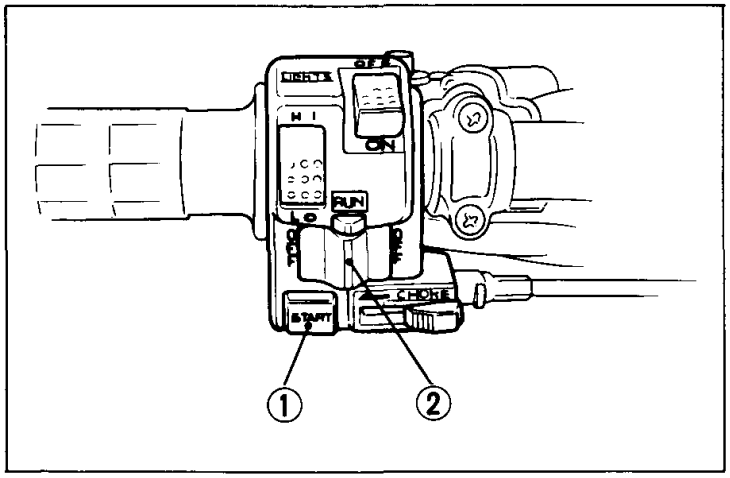

(1) Starter button (2) Engine stop switch

Engine Stop Switch

The three position engine stop switch (2) is next to the left handlebar grip. When the switch is in the RUN position, the engine will operate. In either OFF position, the engine will not operate.
This switch is intended primarily as a safety or emergency switch and should normally remain in the RUN position.

NOTE:

* If your ATC is stopped with the ignition switch ON and the engine stop switch OFF, the headlight will still be on, resulting in battery discharge.

Downloaded from www.Manualslib.com manuals search engine

Headlight Switch

The headlight switch (1) is next to the left handlebar grip. Its operating positions are as follows:

Position	Function
OFF	Headlight is off.
ON	Headlight is on.

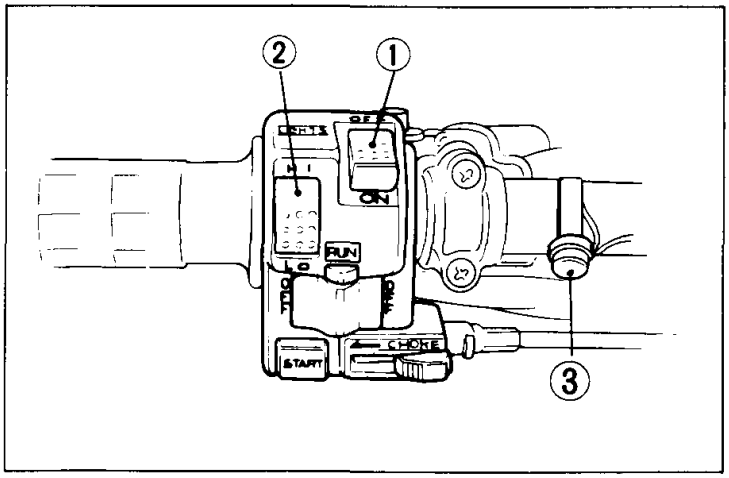

(1) Headlight switch (2) Headlight dimmer switch
(3) Horn button

Headlight Dimmer Switch

Turn the headlight dimmer switch (2) to HI to select high beam or to LO to select low beam.

Horn button

Press the button (3) to sound the horn.

Downloaded from www.Manualslib.com manuals search engine

Neutral Indicator Lamp

The ATC Super Red 250 is equipped with a neutral indicator lamp (1) to show when the transmission is in neutral. The neutral indicator lamp is on the handlebar cover and will light when the transmission is in neutral with the ignition switch ON.

Reverse Indicator Lamp

The ATC Super Red 250 is equipped with a reverse indicator lamp (2) to show when the transmission is in reverse. The reverse indicator lamp is on the handlebar cover and will light when the transmission is in reverse with the ignition switch ON.

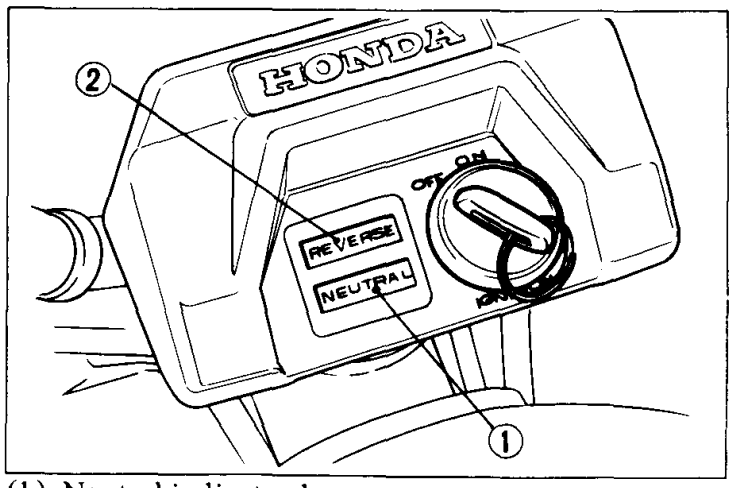

(1) Neutral indicator lamp
(2) Reverse indicator lamp

Downloaded from www.Manualslib.com manuals search engine

Helmet Holder/Steering Lock

The helmet holder is equipped with the steering lock. To lock the steering and use the helmet holder.

1. Turn the handlebars all the way to the right and hang your helmet on the hook at the hinge.
2. Insert the key into the steering lock and turn the key all the way to the left.
3. Remove the key.

WARNING

* ***Do not operate the steering lock while riding the ATC.***

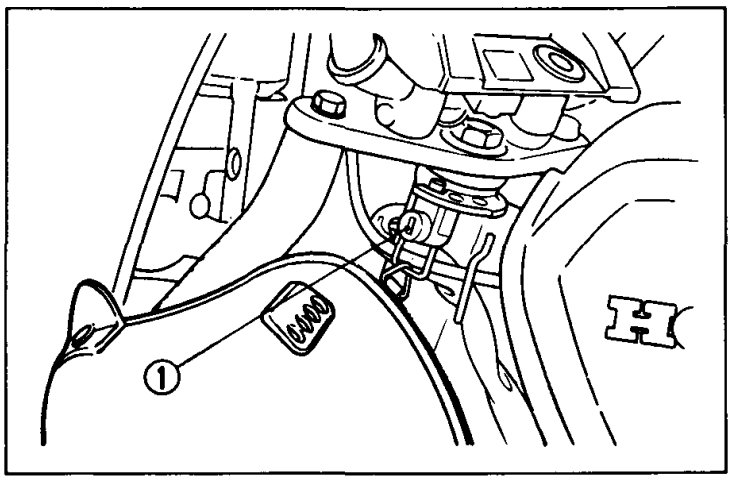

(1) Helmet holder/Steering lock

Storage Compartment/Owner's Manual Compartment

The storage compartment (1) is at the rear of rear fender. The owner's manual compartment (3) is in the storage compartment.

This owner's manual should be stored in the compartment. When washing your ATC or riding through the water, be careful not to flood this area with water. Pull the lever (2) up to open.

WARNING

* ***Do not carry more than 2.3 kg (5 lbs) of cargo in the storage compartment.***

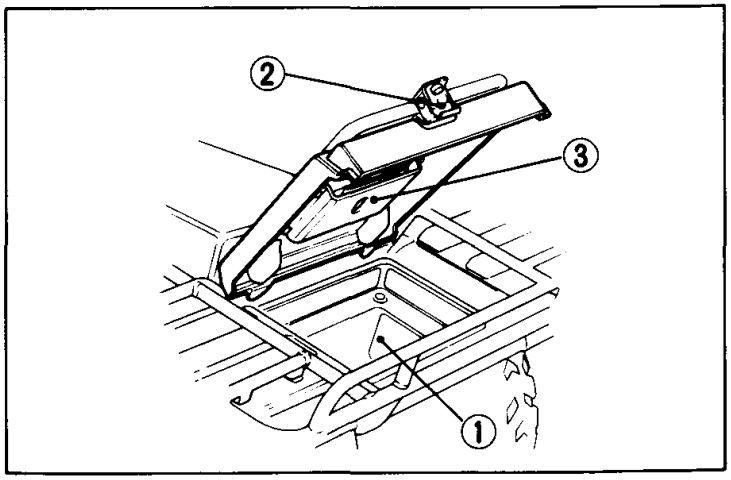

(1) Storage compartment
(2) Lever
(3) Owner's manual compartment

Downloaded from www.Manualslib.com manuals search engine

Throttle Lever

The throttle lever (1) is next to the right handlebar grip and is operated by the rider's thumb. Pressing the lever forward opens the throttle. When the lever is released, spring tension closes the throttle automatically.

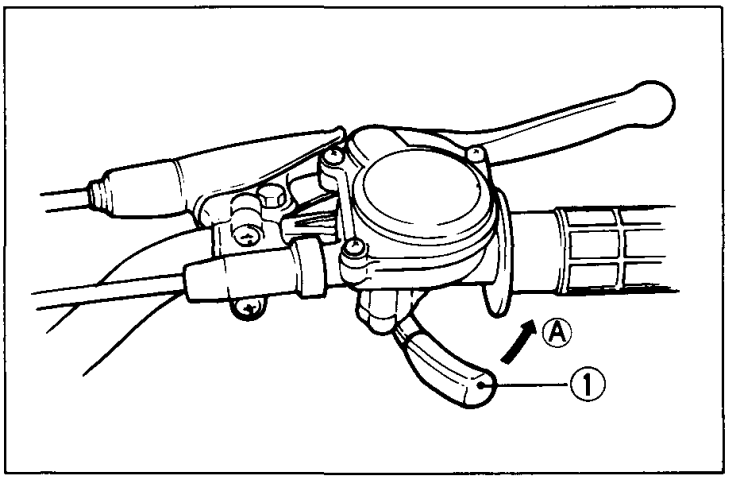

(1) Throttle lever (A) Open

Choke Lever

The choke lever (1) is next to the left handlebar grip. Moving the choke lever to the left for starting the engine when cold. Move the lever to the right as the engine attains normal operating temperature.
To restart a warm engine, it is not necessary to use the choke.

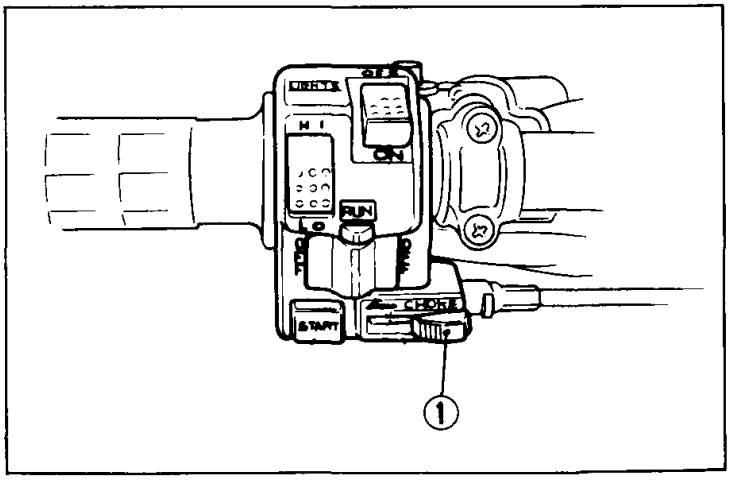

(1) Choke lever

Downloaded from www.Manualslib.com manuals search engine

Brake Lever/Parking Brake

The front brake lever is at the right handlebar grip. The left brake lever (1) and the brake pedal both operate the rear wheel brake. Either one can be used to stop the ATC. The left brake lever has the added feature of a lock (2) which allows the lever to be used as a parking brake.
Pull the left brake lever back and lock it with the lock. Always apply the parking brake when parking the ATC and when starting the engine.
The parking brake is unlocked by squeezing the left brake lever.

NOTE:
* Use of the parking brake in freezing weather may cause the brakes to freeze in the locked position.

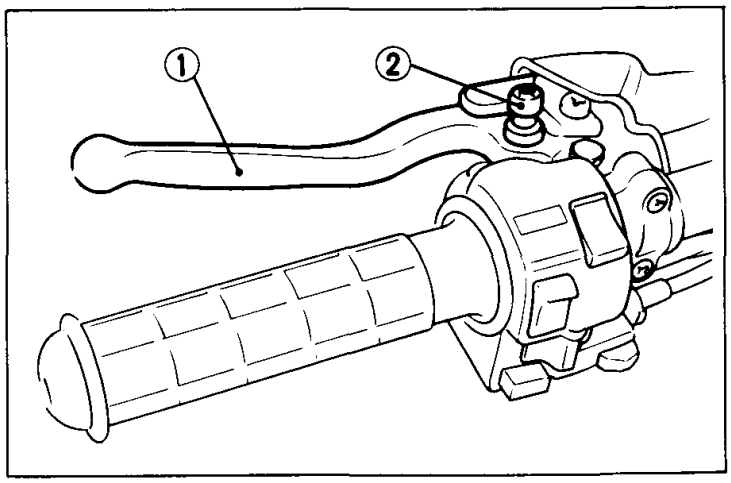

(1) Brake lever/Parking brake (2) Lock

Downloaded from www.Manualslib.com manuals search engine

Gearshift Pedal

The gearshift pedal is near the left footpeg. One full stroke of the gearshift pedal will shift the transmission. The pedal automatically returns to the horizontal position when released. Each stroke of the pedal engages the next gear in sequence.
Raise the pedal to upshift to a higher gear and depress the pedal to downshift.
When the reverse selector knob is pushed in and the rear brake/parking brake lever is squeezed, the transmission can only be shifted from neutral to reverse gear by depressing the gearshift pedal.

CAUTION

* *Bring the ATC to a complete stop before shifting the transmission into reverse. If the transmission is shifted into reverse when the vehicle is moving, damage to the transmission will result.*

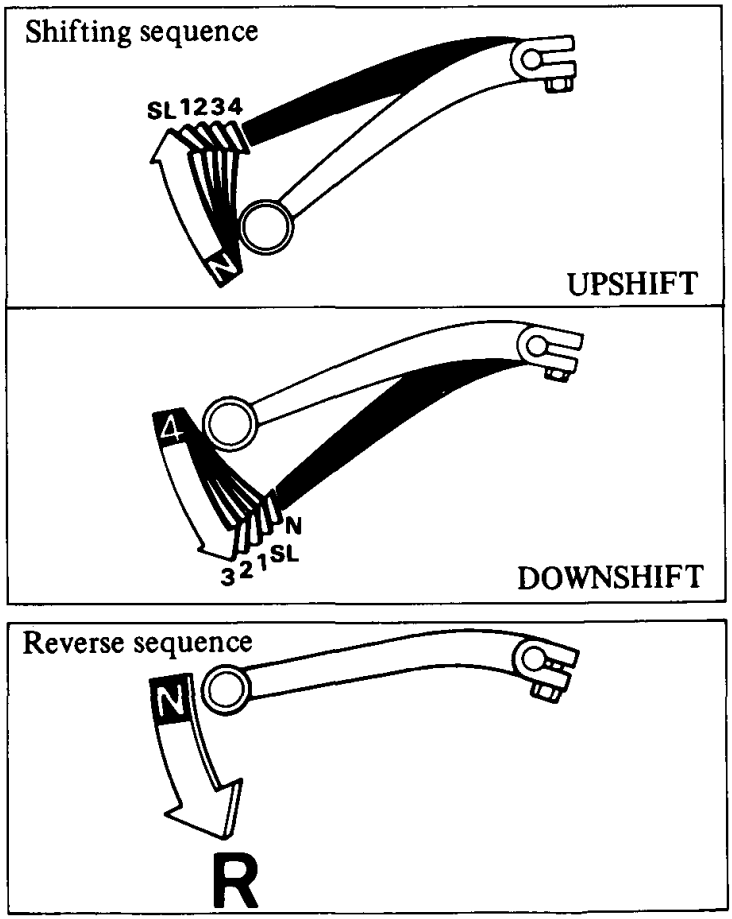

Downloaded from www.Manualslib.com manuals search engine

Reverse Selector Knob

The reverse selector knob is on the rear brake/parking brake lever.
When shifting the transmission into reverse, bring the ATC to a complete stop, push the reverse selector knob in and squeeze the rear brake/parking brake lever.
The transmission will be shifted into reverse by depressing the gearshift pedal.

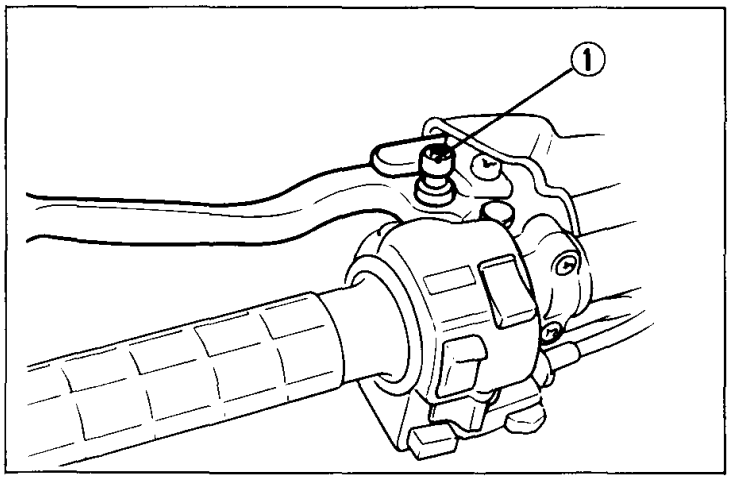

(1) Reverse selector knob

12V DC Power Supply

The direct current receptacle (1) is on the left side of the headlight. It provides 12V DC power at a maximum of 60 watts (5 Amps). The fuse for this power supply is located in the connector box under the headlight. The specified fuse is 15A.

WARNING

* ***Never use a fuse with a different rating from that specified. Serious damage to the electrical system or a fire could result.***

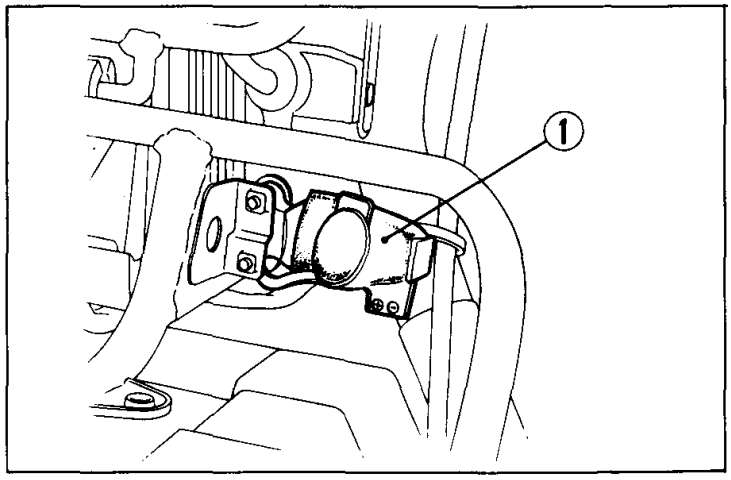

(1) Receptacle

Downloaded from www.Manualslib.com manuals search engine

Accessories may be connected to the receptacle by using the special plug (2) that came with your ATC.

To attach the special plug to the accessory:

1. Install the accessory leads to the plug, making sure to connect the positive and negative leads to the corresponding plug terminals.

CAUTION

* *Do not install the positive and negative accessory leads in reverse when attaching them to the special plug.*

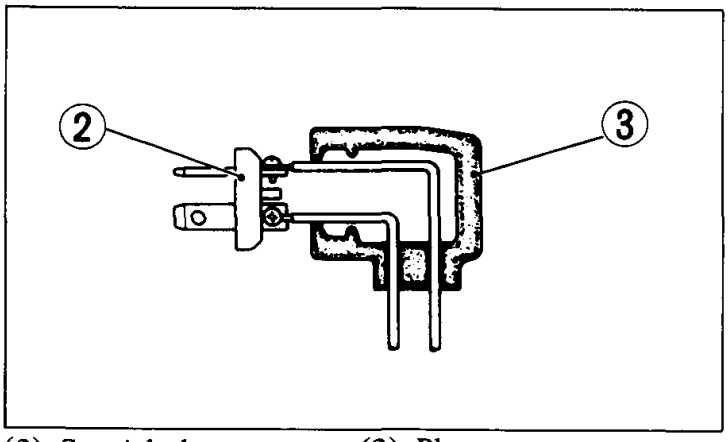

(2) Special plug (3) Plug cover

NOTE:

* We recommend that you use AWG18–AWG20 electrical wire for attachment to the special plug.

2. With the ignition OFF, insert the plug into the plug receptacle, being careful not to twist the electrical leads coming from the accessory.

WARNING

* ***Make sure the ignition switch is OFF when inserting or removing the special plug.***

CAUTION

* *Keep the electrical leads insulated and away from hot engine parts and sharp edges.*
* *Do not use accessories not designed for 12V DC power.*
* *Make sure the electrical leads extend from the bottom of the plug when inserting it in the receptacle.*

3. When the receptacle is not being used, cover it with the rubber cap that came with your ATC to keep out dust, water and sand.

Downloaded from www.Manualslib.com manuals search engine

Headlight

The headlight can be detached and used for work at night.

WARNING

* ***Before riding the ATC, check to make sure the headlight is securely attached and the headlight cord is installed in the cord box (4). Do not ride the ATC with the headlight detached and do not ride with the headlight cord out of the cord box. If the cord is not installed in the cord box, it may interfere with the controls or wheels causing loss of control.***

CAUTION

* *Use the headlight with the engine running to prevent the battery from discharging.*

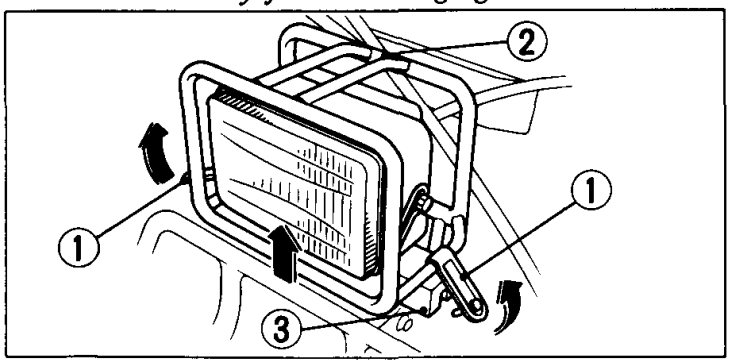

(1) Lock pins
(2) Headlight case bracket
(3) Rubber mount

To detach the headlight from ATC

1. Pull the right and left lock pins (1) out.
2. Grasp the headlight case bracket (2) and pull the headlight up to remove it from the rubber mounts (3).
3. Remove the headlight cord from the cord box.
4. To install the headlight onto the ATC, reverse the detaching procedure.

CAUTION

* *After installation, make sure that the headlight wire is not pinched.*

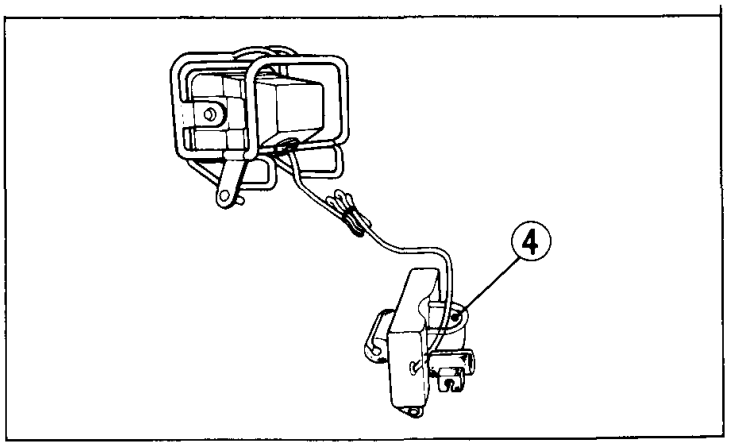

(4) Cord box

Downloaded from www.Manualslib.com manuals search engine

Fuse Replacement

The main fuse, located near the battery box, is 20A. The other fuses are in the connector box under the headlight.
The specified fuses are 15A.
When frequent fuse failure occurs, it usually indicates a short circuit or an overload in the electrical system. See your authorized Honda dealer for repair.

WARNING

* ***Never use a fuse with a different rating from that specified. Serious damage to the electrical system or a fire may result, causing a dangerous loss of lights at night or engine power.***

CAUTION

* *Turn the ignition switch OFF before checking or replacing the fuse to prevent accidental short-circuiting.*

Rear Fender

ATC Super Red 250 rear fender can be opened to the rear.

To open the rear fender:

1. Remove the seat by moving the seat lever.
2. Remove the right and left side covers.
3. Remove the knobs (1) and pull the front of rear fender up to open.
4. Install the end of stopper arm (2) into the hole of rear fender securely.

To install the rear fender onto ATC, reverse the opening procedure.

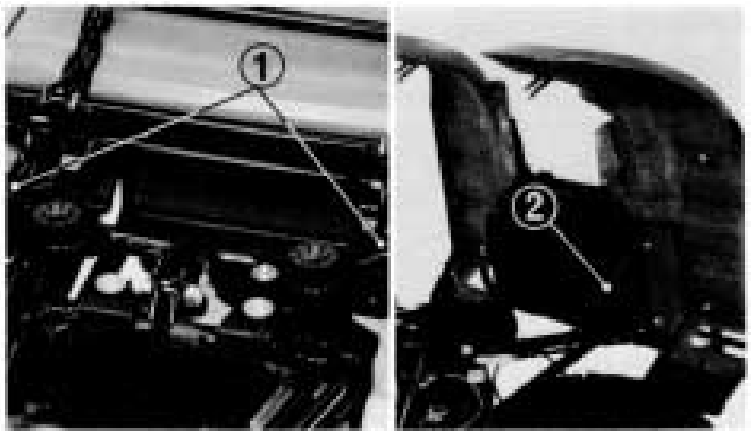

(1) Knobs (2) Stopper arm

Downloaded from www.Manualslib.com manuals search engine

Shock Absorber

Shock absorber (1) has five adjustment positions for different load or riding conditions.
Position I is for light loads and smooth road conditions. Positions II to V increase spring preload for a stiffer rear suspension, and can be used when the ATC is heavily loaded.

(1) Shock absorber

Downloaded from www.Manualslib.com manuals search engine

FUEL

Fuel Valve

The three way fuel valve (1) is on the left side of the carburetor.

OFF

With the fuel valve in the OFF position, fuel cannot flow from the tank to the carburetor. Turn the valve off whenever the ATC is not in use.

ON

With the fuel valve in the ON position, fuel will flow from the main fuel supply to the carburetor.

RES

With the fuel valve in the RES position, fuel will flow from the reserve fuel supply to the carburetor. Use the reserve fuel only when the main supply is gone. Refill the tank as soon as possible after switching to RES. The reserve fuel supply is 2.0 ℓ (0.52 US gal).

NOTE:

* Do not operate the ATC with the fuel valve in the RES position after refueling. You may run out of fuel with no reserve.

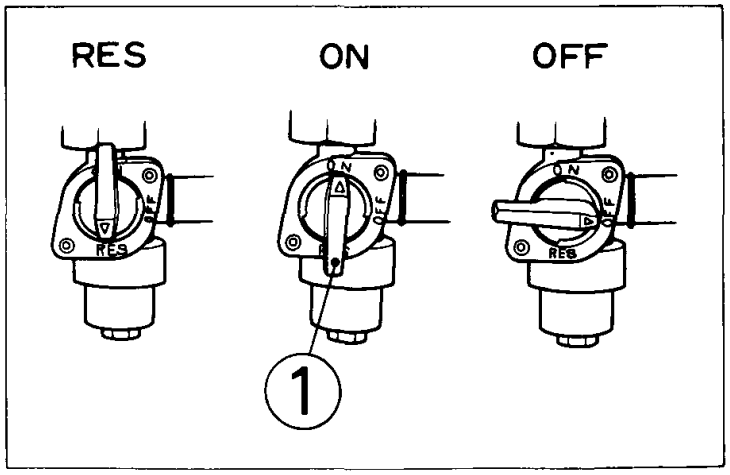

(1) Fuel valve

Downloaded from www.Manualslib.com manuals search engine

Fuel Tank

Fuel tank capacity is 12 ℓ (3.1 US gal) including 2.0 ℓ (0.52 US gal) in the reserve supply. Remove the fuel tank cap (1) by twisting it counterclockwise. After refueling the tank, twist the fuel tank cap clockwise so that the arrow on the tank cap points to the front. Automotive gasoline with a pump octane number ($\frac{R+M}{2}$) of 86 or higher, or research octane number of 91 or higher may be used.

FOR NEW SOUTH WALES ONLY:
Use unleaded fuel with a research octane number of 91 or higher.
If "knocking" or "pinging" occurs, try a different brand of gasoline or a higher octane grade.

After refueling, be sure to tighten the tank cap firmly by turning it clockwise until the arrow on the cap faces forward.

The fuel tank cap (1) has a lever (2) with ON and OFF positions to open or close the tank vent. The lever should be turned to ON to allow fuel to flow when running the engine.
Turning the lever to OFF will prevent fuel from flowing out the vent hole when transporting the ATC.

WARNING

* *Gasoline is extremely flammable and is explosive under certain conditions. Refuel in a well-ventilated area with the engine stopped. Do not smoke or allow open flames or sparks in the area where the vehicle is refueled or where gasoline is stored.*
* *Do not overfill the tank (there should be no fuel in the filler neck). After refueling, make sure the tank cap is closed securely.*
* *Avoid repeated or prolonged contact with skin or breathing of vapor. KEEP OUT OF REACH OF CHILDREN.*

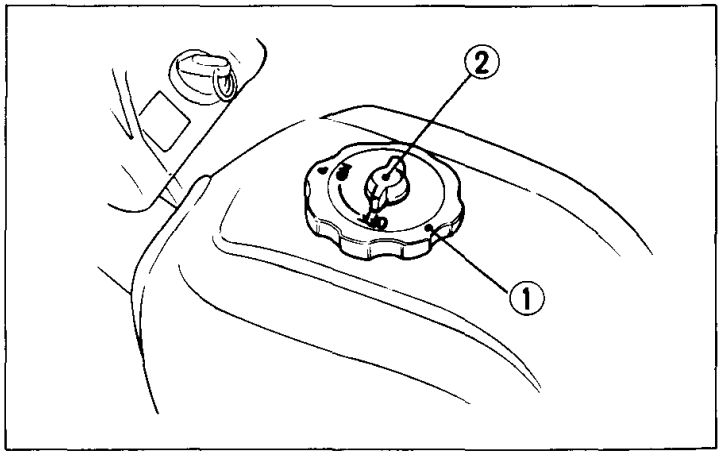

(1) Fuel tank cap
(2) Cap lever

Downloaded from www.Manualslib.com manuals search engine

ENGINE OIL

Engine Oil Level Check

Check the engine oil level each day before operating the ATC.

The oil filler cap/dipstick (1) is on the right crankcase cover and contains a dipstick for measuring the oil level. The oil level must be maintained between the upper (2) and lower (3) level marks on the dipstick.

1. With the ATC on level ground.
2. Start the engine and let it idle for a few minutes and stop the engine.
3. Remove the oil filler cap/dipstick and wipe it clean. Reinsert the dipstick without screwing it in. Remove the oil filler cap/dipstick again and check the oil level.
4. **If required, add the specified oil up to the upper level mark. Do not overfill.**
5. Reinstall the oil filler cap/dipstick.

CAUTION:

* *Running the engine with insufficient oil can cause serious engine damage.*

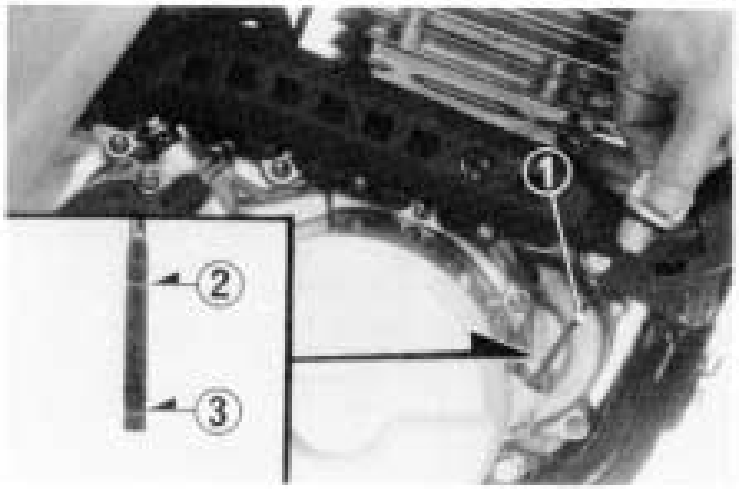

(1) Oil filler cap/dipstick (3) Lower level mark
(2) Upper level mark

Downloaded from www.Manualslib.com manuals search engine

Engine Oil Recommendation

USE HONDA 4-STROKE OIL OR AN EQUIVALENT.

Use only high detergent, premium quality motor oil certified to meet or exceed US automobile manufacturers' requirements for Service Classification SE or SF.

Motor oils intended for Service SE or SF will show this designation on the container. The use of special oil additives is unnecessary and will only increase operating expenses.

CAUTION:

* *Engine oil is a major factor affecting the performance and service life of the engine. Non-detergent, vegetable, or castor based racing oils, are not recommended.*
* *Do not use oils with graphite or molybdenum additives: they will adversely affect clutch operation.*

Recommended Oil Viscosity:
SAE 10W-40

Other viscosities shown in the chart below may be used when the average temperature in your riding area is within the indicated range.

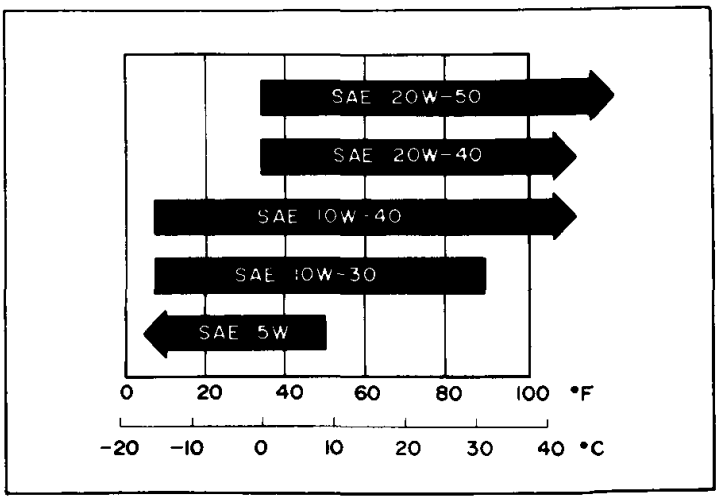

Downloaded from www.Manualslib.com manuals search engine

TIRES

The ATC Super Red 250 is equipped with low pressure tubeless tires to provide a comfortable ride. Although the tires are designed specifically for vigorous off-road use, they are not immune to punctures. Always select your riding area with care.

WARNING

* ***The ATC is not designed to be ridden on paved surfaces. Handling and control will be severely affected.***

Check tire pressure frequently with the air pressure gauge supplied with ATC.
For normal use, the tires should be inflated to a recommended pressure. A manually operated tire pump should be used rather than the high pressure systems found in service stations. This will minimize the possibility of tire damage from overinflation.

NOTE:

* Tire pressure should be checked when the tires are "cold," before you ride.

If no air pressure gauge is available to accurately measure air pressure, this value can be estimated by measuring the circumference of the tires with a measuring tape. When inflated to the recommended pressures,the maximum tire circumference measured over the tread ribs will be approximately the standard tire circumference. The relationship between tire pressure and actual circumference varies slightly with factors of wear and stretching that occur through use.

TIRE SIZE		25 x 12.00–9
TIRE BRAND	Front	PRO/AM501 OHTSU
	Rear	XA601 OHTSU
Recommend Pressure		2.2 psi (15 kPa, 0.15 kg/cm²)
Standard Tire Circumference	Front	1,915 mm (75.4 in)
	Rear	1,932 mm (76.1 in)
Max. Pressure		2.6 psi (18 kPa, 0.18 kg/cm²)
Min. Pressure		1.8 psi (12 kPa, 0.12 kg/cm²)

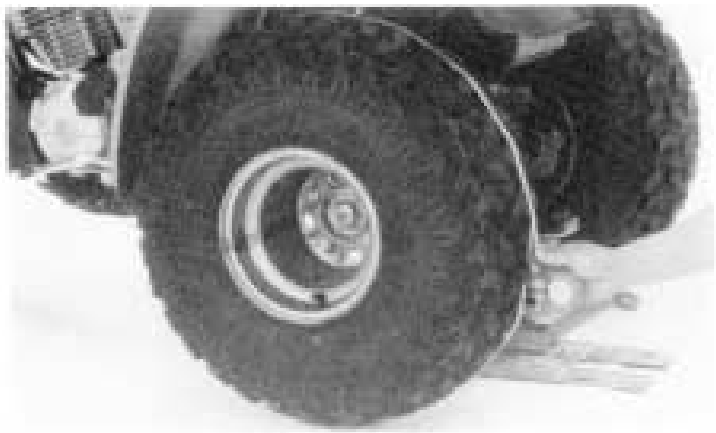

Downloaded from www.Manualslib.com manuals search engine

WARNING

* ***Maintain proper tire air pressure. Improperly inflated tires may adversely affect maneuverability and may cause loss of control.***

If you have a flat tire, use the plug method to make temporary repairs. The plug method is the same as that for conventional tubeless tires. A plug type repair kit, which is available at most auto part stores or service stations, provides a plug, an installation tool, tire cement, and an instruction sheet. Follow the instructions provided in the repair kit to make a temporary repair until the tire can be permanently repaired by the cold patch method. Any tire which cannot be repaired by the plug method should be replaced.

Whenever the ATC is to be operated far from service facilities or available transportation, we recommend that the rider carry a tire pump and a suitable repair kit with the ATC.

Downloaded from www.Manualslib.com manuals search engine

BATTERY

It is not necessary to check battery electrolyte level or add distilled water as the battery is a sealed type. If any loss of electrolyte is experienced or if your battery seems to be weak, causing slow starting or other electrical troubles, see your authorized Honda dealer.

CAUTION

* *Do not attempt to remove the caps from the cells.*
* *When the ATC Super Red 250 is to be stored for an extended period of time, remove the battery from the vehicle and charge it fully. Then store it in a cool, dry place. If the battery is to be left on the vehicle, disconnect the negative cable from the battery terminal.*

WARNING

* ***Keep away from open flames or sparks when handling a battery.***

Downloaded from www.Manualslib.com manuals search engine

PRE-RIDE INSPECTION

WARNING

* ***If the Pre-ride Inspection is not performed, serious damage or an accident may result.***

Inspect your ATC every day before you start the engine. The items listed here will only take a few minutes to check and in the long run can save time, expense, and possibly your life.

1. Engine oil level – if required add engine oil (page 21). Check for leaks.
2. Brakes – check operation. If necessary adjust free play (page 55).
3. Tires – check condition and pressure (page 24).
4. Throttle – check for smooth opening and closing in all steering positions (page 58).
5. Headlight switch and headlight dimmer switch – check for proper function (page 9).
6. Horn – check for proper function.
7. Engine stop switch – check for proper function (page 8).
8. Nuts, Bolts, Fasteners – check the wheels to see that the axle nuts are tightened and secured by cotter pins. Check the security of all other nuts, bolts and fasteners.

Correct any discrepancy before you ride. Contact your authorized Honda dealer for assistance if you cannot correct the problem.

Downloaded from www.Manualslib.com manuals search engine

STARTING THE ENGINE

WARNING

* ***Never run the engine in a closed area. The exhaust contains poisonous carbon monoxide gas.***
* ***Do not try to start the engine with the transmission in gear. You may injure yourself or damage the vehicle.***

Preparation

1. Select a level surface and lock the parking brake (page 13) before starting the engine.
2. Turn the fuel cap vent lever (1) and fuel valve (2) to ON.
3. Make sure the engine stop switch (3) is at RUN.

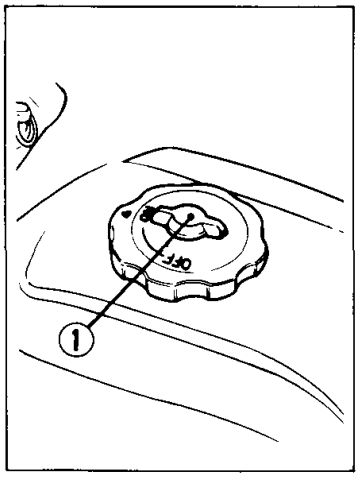

(1) Vent lever

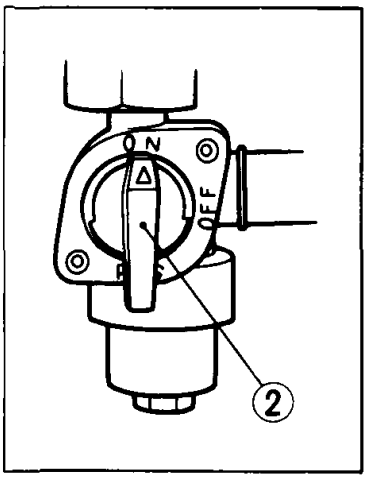

(2) Fuel valve

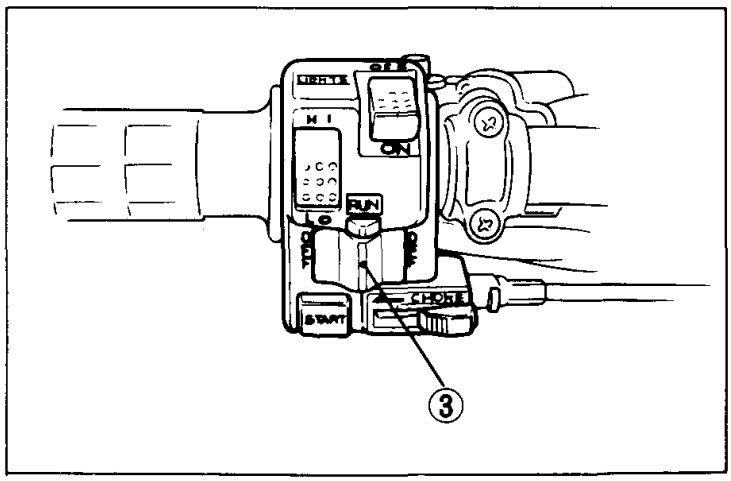

(3) Engine stop switch

Downloaded from www.Manualslib.com manuals search engine

Starting Procedure (after Preparation)

To restart a warm engine, follow the procedure for High Air Temperature.

Normal Air Temperature
0°–35°C (32°–95°F)

1. Move the choke lever (4) to the halfway position (B).
2. Turn the ignition switch (5) to ON. Make sure that the transmission is in neutral by checking the neutral indicator lamp (6).
3. Keep the throttle fully closed.
4. Press the starter button (7) and start the engine.

NOTE:
* Do not use the electric starter for more than 5 seconds at a time. Release the starter button for approximately 10 seconds before pressing it again.
* The starter motor will operate only when the transmission is in neutral.

5. After the engine starts, continue warning up the engine until it will idle smoothly with the choke lever, in the halfway position (B). Then push the choke lever all the way to Fully Closed (A).
   If idle is instable open the throttle slightly.

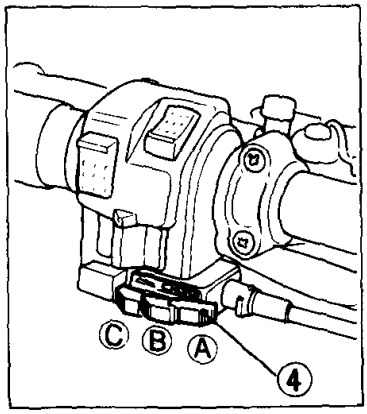

(4) Choke lever

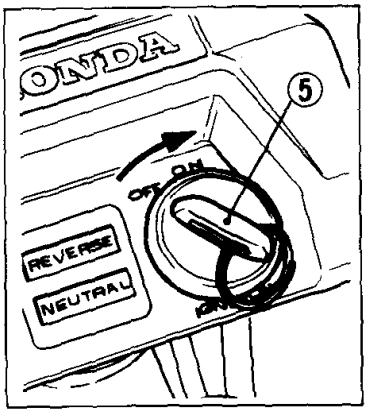

(5) Ignition switch

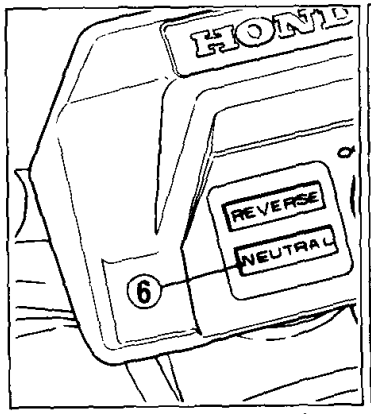

(6) Neutral indicator lamp

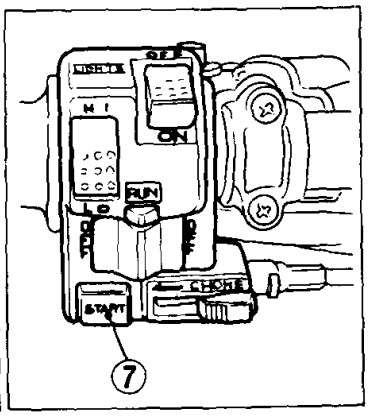

(7) Starter button

Downloaded from www.Manualslib.com manuals search engine

High Air Temperature

35°C (95°F) or above

1. Do not use the choke.
2. Start the engine by pressing the starter button.

Low Air Temperature

0°C (35°F) or below

1. Move the choke lever (4) all the way to Fully Open (C).
2. Turn the ignition switch (5) to ON. Make sure that the transmission is in neutral by checking the neutral indicator lamp (6).
3. Keep the throttle fully closed.
4. Press the starter button (7) and start the engine.
5. Immediately after engine starts, move the choke lever (4) to the halfway position (B).
6. Continue warning up the engine until it will idle smoothly with the choke lever, in the halfway position. Then move the choke lever all the way to Fully Closed (A). If idle is instable open the throttle slightly.

CAUTION

* *Extended use of the choke may impair piston and cylinder wall lubrication.*
* *Do not race the engine during the warm-up period. Racing a cold engine wastes fuel and increases engine wear.*

Downloaded from www.Manualslib.com manuals search engine

Kickstarting

If the engine does not start with the electric starter, use the kickstarter.

1. Remove the right side cover.
2. Follow the step under Preparation and 1–2 under Normal Air Temperature.

NOTE:

* Do not use the choke when restarting a warm engine or when air temperature is 35°C (95°F) or above.

3. Start the engine by using the kickstarter pedal (1).

NOTE:

* The engine will start only when the transmission is in neutral.

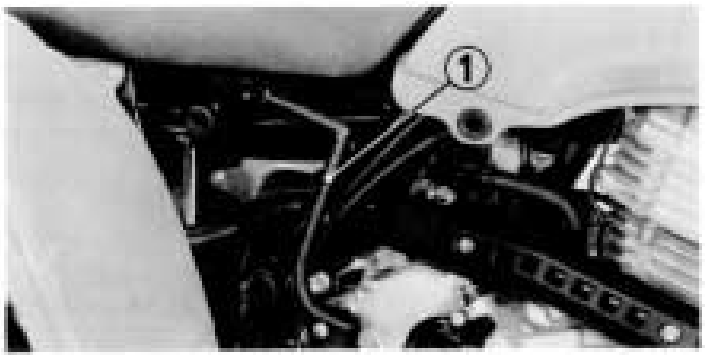

(1) Kickstarter pedal

Flooded Engine

If the engine does not start after several attempts, it may have become flooded with excess fuel. To clear the engine, turn the ignition switch OFF, move the choke lever to the right completely, hold the throttle fully open, and briefly press the starter button or crank the engine several times with kickstarter. When the engine is cleared, wait 10 seconds then turn the ignition switch ON and repeat the normal starting procedure, but do not use the choke.

BREAK-IN

During the first few days of riding, operate your new ATC Super Red 250 so that the engine neither pulls laboriously nor approaches maximum rpm in any gear. Avoid full throttle operation, and shift gears frequently to vary engine speed. Careful break-in during the initial operating period will measurably extend the service life of the engine.

Downloaded from www.Manualslib.com manuals search engine

RIDING

WARNING

* *Review ATC Safety (page 1-3) before you ride.*
* *Avoid "wheelies" and jumping as they may cause loss of control.*
* *Ride with your feet on the footpegs at all times. If your feet are removed from the footpegs and touch the ground while the ATC is moving, they may come in contact with the rear wheels.*
* *The ATC is not designed to be ridden on paved surfaces. Handling and control will be severely affected.*
* *While carrying loads or pulling a trailer, use extreme caution when starting, stopping or turning the ATC.*

Under normal riding conditions it is not necessary or desirable to touch the ground for balance.
For your initial riding practice, select a safe area free of obstacles and with an even surface. Avoid paved surfaces as they make learning to maneuver more difficult, and will also significantly shorten tire life.

1. Make sure the transmission is in neutral and set the parking brake.
2. After the engine has been warmed up, release the parking brake. The ATC is ready for riding.
3. While the engine is idling, raise the gearshift pedal to shift into SL (Super-low) gear.

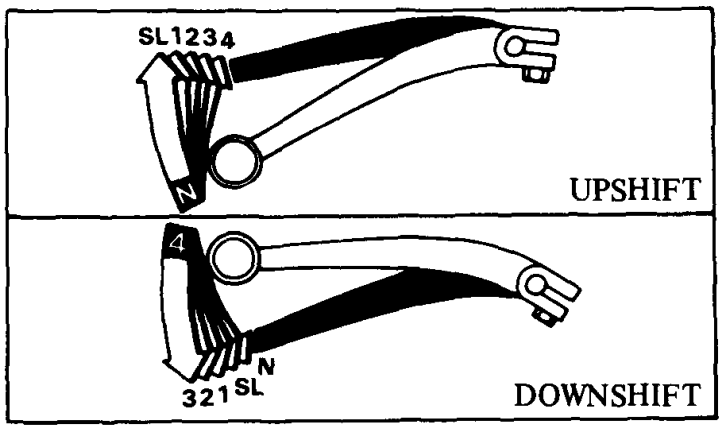

Shifting sequence

Downloaded from www.Manualslib.com manuals search engine

4. Increase engine speed by gradually opening the throttle.
5. When your speed increases, close the throttle and shift to 2nd gear by raising the gearshift pedal again.

CAUTION

* *Do not shift gears without closing the throttle. The engine and drive train could be damaged by overspeed and shock.*

6. This sequence is repeated to progressively shift to 3rd and 4th (top) gear.

CAUTION

* *Do not tow the ATC or coast for long distances while the engine is off. The transmission will not be properly lubricated and damage may result.*

Reverse Riding

For reverse riding practice, make sure there are no obstacles or people in the area.

1. Make sure the transmission is in neutral and set the parking brake.
2. Start the engine and release the parking brake.
3. While the engine is idling, press the reverse selector knob, squeeze the rear brake/parking brake lever and depress the gearshift pedal into the reverse gear.
4. Release the rear brake/parking brake lever.
5. Ride the ATC cautiously in reverse by gradually opening the throttle.

WARNING

* ***When backing up, open the throttle carefully to ride slowly and safely, being careful that there are no obstacles or people behind you.***
* ***Avoid sudden application of the throttle or abrupt turns.***
* ***Close the throttle and apply both front and rear brakes carefully to stop the ATC when riding in reverse. Applying the rear brake alone may cause the front wheel to lift off the ground.***
* ***Make sure the neutral indicator light comes on after shifting the transmission from reverse into neutral. If the neutral indicator light does not come on, move the ATC and then try to shift the transmission into neutral again.***

Downloaded from www.Manualslib.com manuals search engine

Turning Maneuvers

For better traction in off-road use, the ATC has been fitted with a rear axle which drives both rear wheels equally at all times.

When negotiating a turn, the wheel on the outside of the turn must travel a wider radius and thus a greater distance than the inside wheel. As the rear axle does not permit a differing rate of wheel rotation, it is not enough to merely steer the ATC into a turn. The new rider must learn to shift his or her weight and control the throttle to allow the rear tires to negotiate the turn. This is the primary technique to be mastered in riding the Honda ATC. For your initial riding practice, operate the ATC in low gear.

Practice turning the ATC at slow, constant speeds. Defer higher speeds until you are confident of your proficiency.

To turn, steer in the direction of the turn, leaning your body to the inside of the turn, while supporting your weight on the outer footpeg. Use the throttle to maintain power throughout the turn.

This technique allows the ATC to lean slightly toward the outside, altering the balance of traction between the rear wheels sufficiently to allow them to negotiate the turn.

Once this technique is learned, turning maneuvers can be performed within a relatively small area.

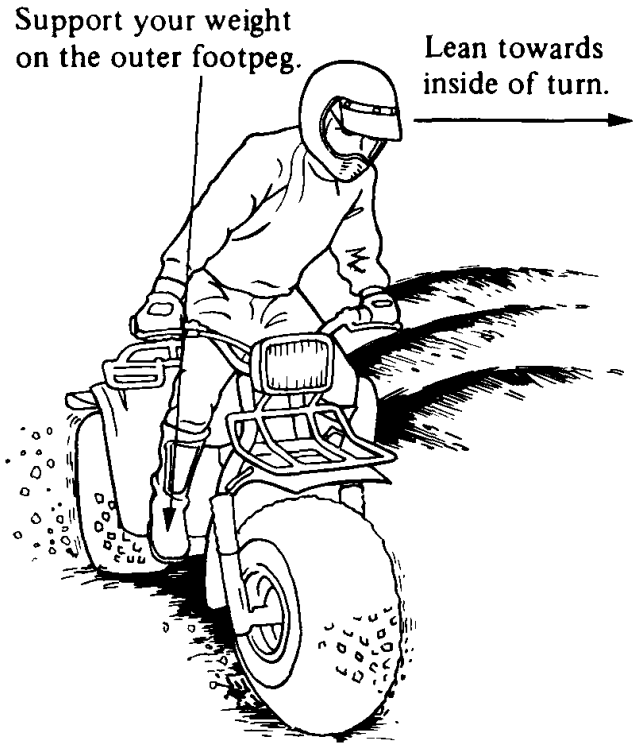

Downloaded from www.Manualslib.com manuals search engine

Incorrect turning techniques may cause the front wheel to slide straight ahead when steered without affecting the ATC's direction of travel. If this should occur, close the throttle and come to a stop. Then continue practicing the technique outlined on the preceding page.

If the front wheel tends to skid in mud or snow, you may be able to improve control under these conditions by leaning forward, transferring additional weight to the front wheel.

If the rear wheels inadvertently skid sideways, correct your slide by steering in the direction of the skid if you have room to perform this maneuver safely. Avoid braking or accelerating until you have regained directional control.

To avoid skids while traveling on slippery terrain, the rider must exercise a high degree of caution. Controlled skids and spins, when performed safely, add to the sport the rider can enjoy. However, as skidding maneuvers are inherently more hazardous than those performed under full traction, we must caution the rider to first master the basic techniques of handling before practicing any skidding maneuver.

Surface composition is, of course, a major factor affecting skidding capability. It is obviously easier to slide on packed snow than in deep sand. Surfaces with extremely low or extremely high coefficients of friction must not be used for skidding maneuvers. It is dangerous to skid on ice, because you may lose all directional control, and it is dangerous to skid on pavement, because you may regain traction suddenly and unexpectedly, which can cause you to lose your balance and overturn.

Downloaded from www.Manualslib.com manuals search engine

Climbing Hills

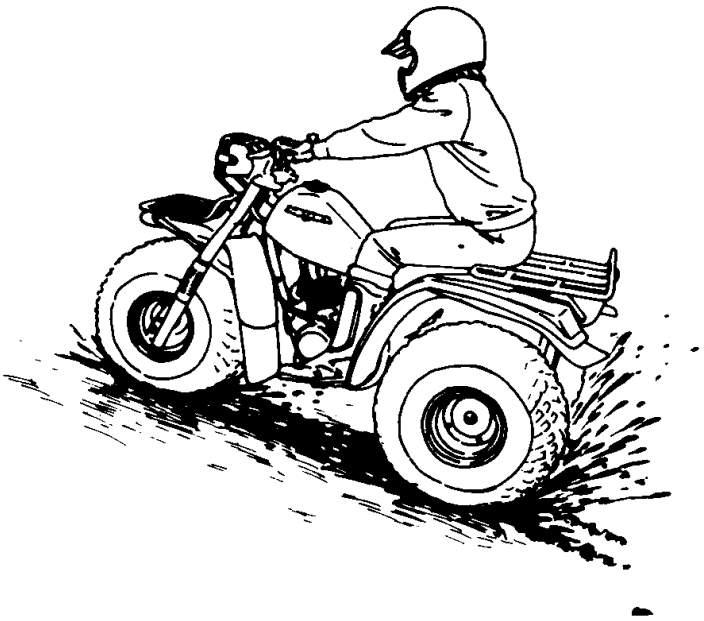

Practice climbing on evenly surfaced slopes of less than 20°. The ATC's capability in climbing hills or traversing any specific terrain is dependent upon rider skill. As you gain experience in handling the ATC and learn the hazards to be encountered and your own limitations, you may then proceed to ride more challenging terrain. However, you must first be able to discern and avoid any hill or hazard that would cause the ATC to overturn.

The riding technique for hill climbing involves transferring your weight toward the front wheel to keep it in contact with the ground. This may be done by leaning forward, or for greater weight transference, by standing on the footpegs and leaning forward.

Take a running start, in the appropriate gear and speed for the ascent, and climb at a steady rate of speed.

WARNING

* ***Do not apply power suddenly by opening the throttle or changing gears while ascending a hill, or the front wheel may rise from the ground. If the front wheel lifts, rider control will be lessened and the ATC may overturn backward.***

Downloaded from www.Manualslib.com manuals search engine

If you should find that you have incorrectly estimated climbing capability and lack the power or traction to continue the ascent, then turn the ATC around if space permits, while you still have the forward speed to do so and descend. Avoid stalling part way up a hill, as maneuvering will then become more difficult.

WARNING

* ***Before attempting a turn on a hillside, the rider should first master turning technique on level ground.***

If you do lose all forward speed and can neither continue uphill nor maneuver the ATC under its own power, dismount and physically turn the machine around. If it cannot be turned and must be backed down, first shift the transmission into neutral. However, we strongly recommend that the rider turn the ATC around rather than back it downhill.

WARNING

* ***To avoid overturning, the rider must exercise a high degree of caution when dismounting or moving the ATC on a hillside.***

* ***Applying the brakes or engaging the transmission while rolling backward downhill can easily cause the ATC to overturn and fall on the rider.***

Downloaded from www.Manualslib.com manuals search engine

Descending Hills

It is usually advisable to descend hills with the ATC pointed directly downhill, avoiding angles that would cause the vehicle to lean sharply to one side. As you approach the point of descent, stop and survey the terrain below. Never ride headlong past your limit of visibility. When you have picked a safe path of descent, shift the transmission into low gear and descend slowly with the throttle closed. Sit back on the seat, with arms extended and braced on the handlebars.

When descending sand dunes, we recommend that the rider apply the brake intermittently to further reduce forward speed.

Braking effectiveness is, of course, reduced while descending any incline with a loose surface.

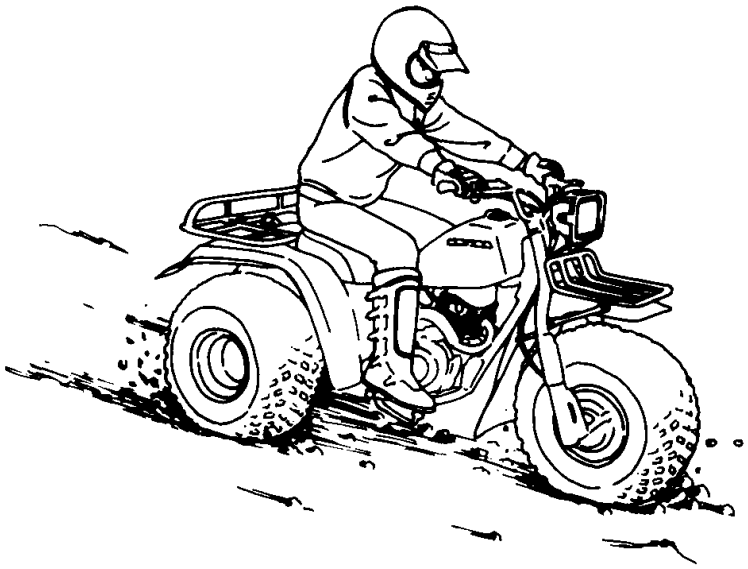

Downloaded from www.Manualslib.com manuals search engine

Traversing Slopes

When riding across a slope at right angles to the incline of the hill, lean your body uphill to maintain balance and stability. On a loose surface such as sand, it may become necessary to steer slightly uphill in order to maintain your course of travel.

WARNING

* *Balance is more precarious while the ATC is tilted to one side. Avoid traversing slopes where there is slippery or difficult terrain.*

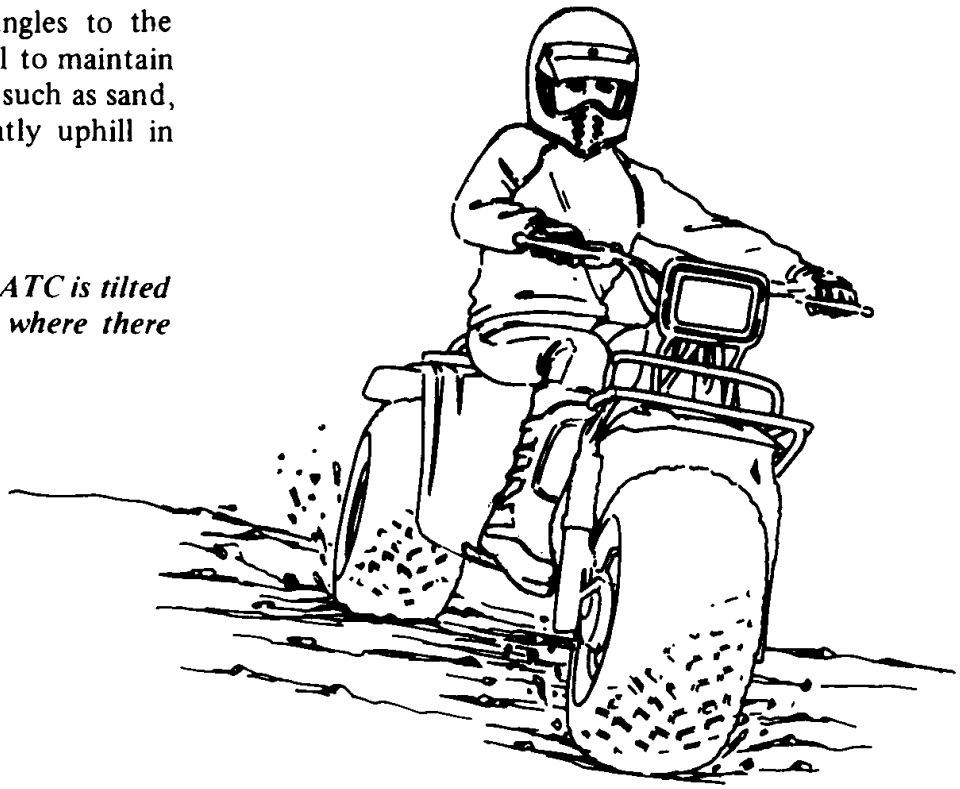

Downloaded from www.Manualslib.com manuals search engine

Riding Through Water

WARNING

* *Do not ford any stream with fast flowing water. The tires may float, making it difficult to maintain control.*
* *Do not ride the ATC through water beyond its limit.*

The Honda ATC can ford water to a depth of approximately 11 inches, although the rider must be careful to avoid getting the spark plug or air cleaner wet.

When crossing streams, choose a course where both banks have gradual inclines. Proceed at a slow, steady speed, and take care to avoid submerged obstacles and slippery rocks.

After riding through water, the brakes may be less effective than normal. Test the brakes after traveling through any water, and if necessary, apply the brakes repeatedly until the heat of friction has dried them, and the brakes regain their normal effectiveness.

If they do not dry out and regain their effectiveness, stop the ATC and shut the engine OFF. Set the parking brake ON and drain any trapped water by removing the drain bolt (1) from the bottom of the rear brake panel.

CAUTION:

* *If any water drains, it is an indication that the rear brake seals must be replaced. Have these seals checked by your Honda dealer as soon as possible.*

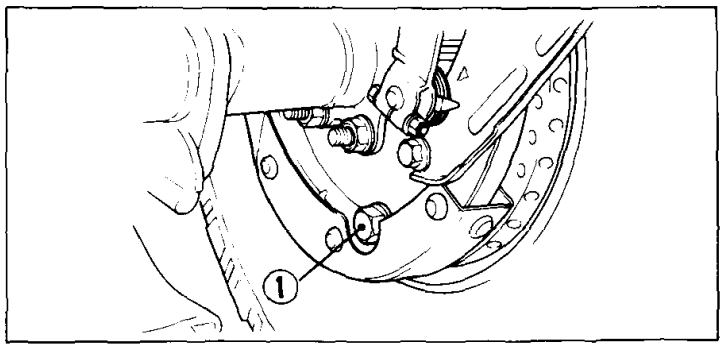

(1) Drain bolt

Downloaded from www.Manualslib.com manuals search engine

High Altitude Riding

When operating this vehicle at high altitudes the air-fuel mixture becomes overly rich. Above 6,000 feet (1,800 m) driveability and performance may be reduced and fuel consumption increased. The carburetor can be modified to compensate for this high altitude richness. However, the carburetor must be returned to standard factory specifications when lower altitude riding is desired. (See page 48.)

CAUTION:

* *Sustained operation at altitudes below 5,000 feet (1,500 m) with high altitude carburetor modifications may cause engine overheating and damage.*

PARKING

1. Stop the vehicle, shift the transmission into neutral, turn the fuel valve, fuel cap lever, and ignition switch OFF.
2. Pull the parking brake lever and lock it. (See page 13.)

WARNING

* ***Do not park on an incline. If you must park on a hill, place the ATC traversely across the incline.***

Downloaded from www.Manualslib.com manuals search engine

MAINTENANCE SCHEDULE

- Perform the Pre-ride Inspection (Page 27) at each scheduled maintenance period.

I: Inspect and Clean, Adjust, Lubricate or Replace, if necessary C: Clean R: Replace A: Adjust		EVERY	INITIAL SERVICE PERIOD (First week of operation)	REGULAR SERVICE PERIOD (Every 30 operating days)	Refer to page
*	FUEL LINE	YEAR: I			–
*	FUEL STRAINER SCREEN	YEAR: C			46
*	THROTTLE OPERATION		I	I	58
*	CARBURETOR CHOKE			I	–
	AIR CLEANER	(NOTE 1)		C	51
	SPARK PLUG			I	50

* SHOULD BE SERVICED BY AUTHORIZED HONDA DEALER, UNLESS THE OWNER HAS PROPER TOOLS AND SERVICE DATA AND IS MECHANICALLY QUALIFIED. REFER TO THE OFFICIAL HONDA SHOP MANUAL.

** IN THE INTEREST OF SAFETY, WE RECOMMEND THESE ITEMS SERVICED ONLY BY AN AUTHORIZED HONDA DEALER.

NOTES: 1. Service more frequently when riding in dusty areas, sand or snow.
2. Service more frequently after riding in very wet or muddy conditions.

Downloaded from www.Manualslib.com manuals search engine

I: Inspect and Clean, Adjust, Lubricate or Replace, if necessary C: Clean R: Replace A: Adjust		EVERY	INITIAL SERVICE PERIOD (First week of operation)	REGULAR SERVICE PERIOD (Every 30 operating days)	Refer to page
*	VALVE CLEARANCE		I	I	52
	ENGINE OIL		R	R	23
	ENGINE OIL FILTER		R	R	45
*	CARBURETOR IDLE SPEED		I	I	–
	FINAL DRIVE OIL	YEAR: I 2 YEARS: R			59
*	BRAKE SHOE WEAR	YEAR: I (NOTE 2)			55
	BRAKE SYSTEM		I	I	–
*	REVERSE LOCK SYSTEM		I	I	–
*	CLUTCH SYSTEM		I	I	–
*	SUSPENSION			I	–
*	NUT, BOLT, FASTENER		I	I	–
**	WHEELS		I	I	–
**	STEERING HEAD BEARING	YEAR: I			–

Downloaded from www.Manualslib.com manuals search engine

WARNING

* *Always turn the engine off before performing any maintenance operations unless otherwise stated.*
* *To maintain the safety and reliability of your HONDA ATC do not modify it and use only new genuine HONDA parts or their equivalent when servicing or repairing.*
  The use of replacement parts which are not of equivalent quality may impair the operation of your ATC.

TOOL KIT

The tool kit is stored in the compartment (1) shown below. The tools provided are sufficient to perform routine maintenance and simple repairs. Any extensive work requiring additional tools should be performed by an authorized Honda motorcycle dealer. Listed below are the items included in the tool kit:

- Phillips screwdriver
- Handle for screw driver
- 10 x 12 mm open end wrench
- 14 x 17 mm open end wrench
- Pliers
- Plug wrench/ box end wrench
- Handle for wrench
- Handle for plug wrench
- Pin spanner
- Tool bag
- Air pressure gauge

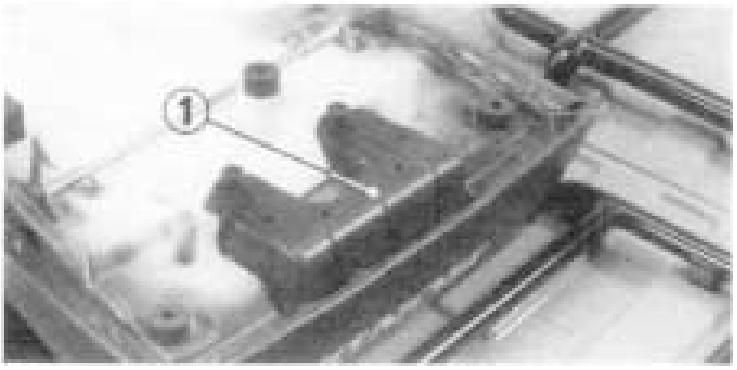

(1) Tool compartment

Downloaded from www.Manualslib.com manuals search engine

ENGINE OIL AND FILTER

Engine oil should be changed in accordance with the maintenance schedule. Use motor oils of the grade and viscosity recommended on Page 23.

When changing oil, drain the oil from the crankcase while the engine is still warm. This will ensure complete and rapid draining.

1. With the ATC on level ground, remove the oil filler cap from the right crankcase cover.
2. Place an oil drain pan under the crankcase and remove the oil drain plug (1).
3. Remove the oil filter cover by removing the screws. Let the remaining oil drain out. Discard the oil filter (2).
4. Check that the oil filter cover O-ring (3) is in good condition and then install the new oil filter with the rubber on oil filter facing out and install the cover using the screws. Tighten the screws securely.

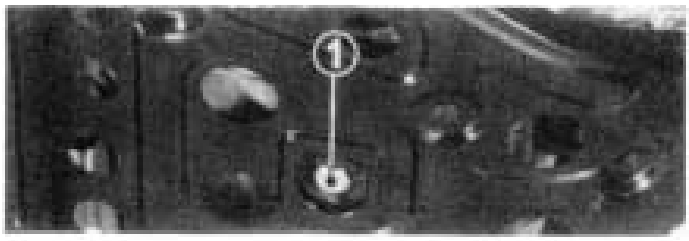

(1) Oil drain plug

5. Fill the crankcase with approximately 2.1 liters (2.2 US qt) of the recommended oil.
6. Install the oil filler cap.
7. Start the engine and let it idle for 2–3 minutes.
8. Stop the engine and make sure that oil level is between the upper and lower marks on the dipstick. If necessary, add more oil but do not overfill.

CAUTION

* *Running the engine with improper oil level can cause serious engine damage.*

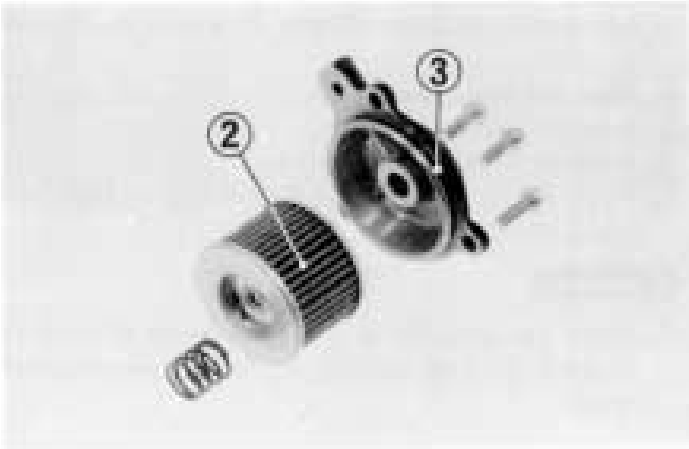

(2) Oil filter (3) O-ring

Downloaded from www.Manualslib.com manuals search engine

FUEL STRAINER

The fuel strainer is on the left side of the carburetor. The fine mesh screen of the strainer prevents dirt from entering the carburetor passages. Dirt which accumulates in the fuel strainer must be removed periodically, or the fuel flow will eventually be restricted.

WARNING

* ***Gasoline is extremely flammable and is explosive under certain conditions. Perform this operation in a well-ventilated area with the engine stopped. Do not smoke or allow flames or sparks in the area.***

1. Turn the fuel valve OFF.
2. Remove the strainer cap.
3. Remove the filter screen (1).
4. Wash the screen in non-flammable or high flash point solvent.

WARNING

* ***Never use gasoline or low-flash point solvents for cleaning the fuel strainer. A fire or explosion could result.***

5. Reassemble by reversing the disassembly sequence.
6. Turn the fuel valve ON, and check for leaks. Correct if necessary.

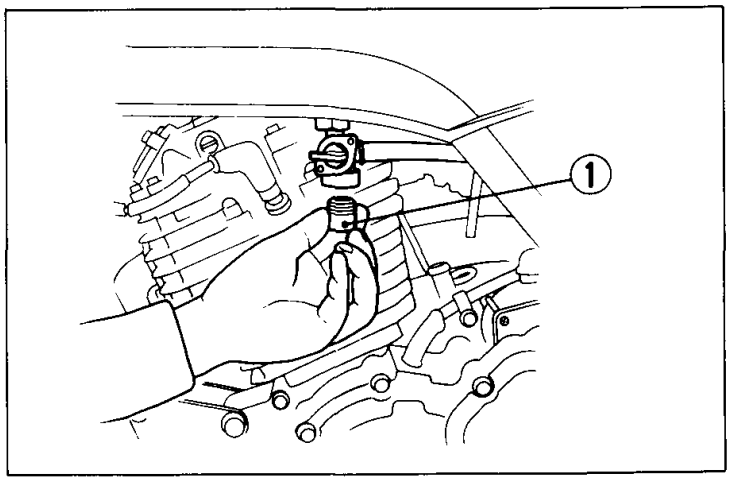

(1) Filter screen

Downloaded from www.Manualslib.com manuals search engine

CARBURETOR

The engine must be warm for accurate idle adjustment. Ten minutes of stop-and-go riding is sufficient.

NOTE:

* Do not attempt to compensate for faults in other systems by carburetor adjustment. See your authorized Honda dealer for regularly scheduled carburetor adjustments.

1. Warm up the engine.
2. Adjust idle speed with the throttle stop screw (1).
   IDLE SPEED: 1,400 ± 100 rpm
3. To adjust the fuel mixture, turn the pilot screw (2) clockwise until you hear the engine miss or decrease in speed, then turn it counterclockwise until the engine again misses or decreases in speed. Center the pilot screw exactly between these two extreme position.

   Usually the correct setting (between extremes of rich and lean) will be found to be 2-1/2 turns open from a fully closed position.

   If idle speed changes after adjusting the fuel mixture, readjust the throttle stop screw.

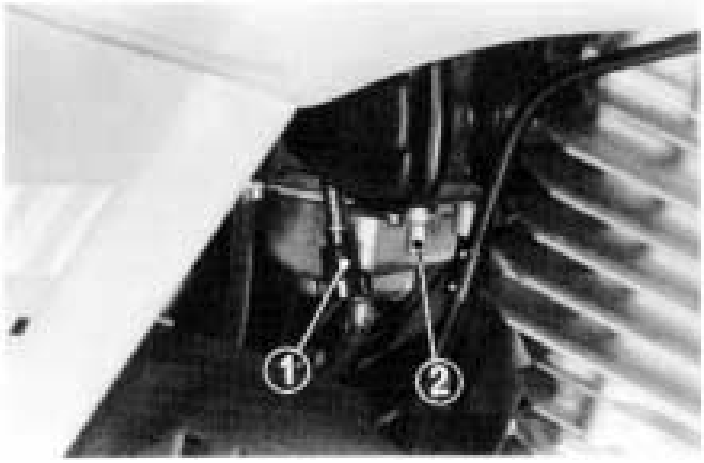

(1) Throttle stop screw (2) Pilot screw

Downloaded from www.Manualslib.com manuals search engine

HIGH ALTITUDE

When operating this ATC at high altitude the air-fuel mixture becomes overly rich.

Above 6,000 feet (1,800 m) driveability and performance may be reduced and fuel consumption increased.

A high altitude jet is available for carburetor modification to compensate for this high altitude richness. Although installation and adjustment procedures are offered here. We strongly urge that this carburetor modification be performed by your authorized Honda dealer, unless you are mechanically proficient and have the necessary tools.

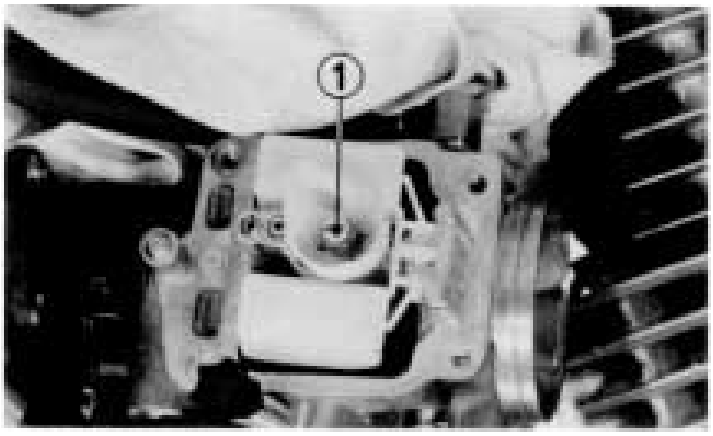

(1) Main jet

CAUTION:

* *Sustained operation at lower altitudes below 5,000 feet (1,500 m) with the high altitude jet installed may cause engine overheating and damage.*

Altitude	Main jet	Pilot screw
Below 6,000 feet	No. 130	Factory preset
Above 5,000 feet	No. 125	1/2 screw in

Installation: Above 5,000 ft (1,500 m)

1. Turn the fuel valve OFF.
2. Place the carburetor drain tube in a suitable container. Turn the carburetor drain screw counterclockwise and drain the carburetor.

WARNING

* ***Gasoline is extremely flammable and is explosive under certain conditions. Perform this operation in a well-ventilated area. Do not smoke or allow flames or sparks in the area.***

Downloaded from www.Manualslib.com manuals search engine

3. Remove the carburetor by removing the nuts and the screw on the band. Remove the carburetor.
4. Remove the float chamber.
5. Remove the standard main jet (1) and install the high altitude main jet. Reinstall the float chamber.
6. Install the carburetor. Make sure the drain screw is turned fully clockwise and turn the fuel valve ON.
7. Check to see if the throttle returns without hesitation and the throttle valve comes down to the lowest position without fail.
8. Make sure that the fuel tube and overflow tube are correctly routed as they were originally installed.
9. Start the engine. Adjust the idle speed (page 47).

NOTE:

* Adjust the idle speed at high altitude to ensure proper high altitude operation.

Removal: Below 6,000 ft (1,800 m)

1. Follow installation steps 1-4.
2. Reinstall the standard main jet.
3. Reinstall the carburetor.
   Adjust the idle speed (page 47).

NOTE:

* Adjust the idle speed at low altitude to ensure proper low altitude operation.

Downloaded from www.Manualslib.com manuals search engine

SPARK PLUG

Standard spark plug

DR8ES-L (NGK), X24ESR-U (ND)

CAUTION:

* *The use of spark plugs of incorrect size or heat range can cause serious engine damage.*

1. Disconnect the spark plug cap.
2. Clean any dirt from around the spark plug base.
3. Remove the plug with the wrench provided in the tool kit.
4. Visually inspect the spark plug electrodes for wear. The center electrode should have square edges and the side electrode should not be eroded. If the electrodes and insulator tip appear unusually fouled or burned, we suggest that you contact an authorized Honda dealer for inspection of the ATC. Discard the spark plug if there is apparent wear or if the insulator is cracked or chipped.
5. Make sure that the spark plug gap is 0.6–0.7 mm (0.024–0.028 in) using a wire-type feeler gauge. If adjustment is necessary, bend the side electrode (1) carefully.
6. With the plug washer attached, thread the spark plug in by hand to prevent cross-threading.
7. Tighten a new spark plug 1/2 turn with the spark plug wrench to compress the washer. If you are reusing a plug, it should only take 1/8–1/4 turn after the plug seats.

CAUTION:

* *The spark plug must be securely tightened. An improperly tightened plug can become very hot and possibly damage the engine.*

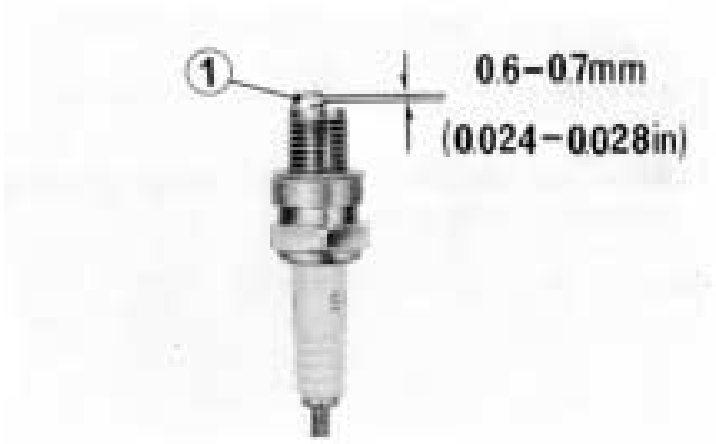

(1) Side electrode

Downloaded from www.Manualslib.com manuals search engine

AIR CLEANER

The air cleaner element accumulates dust and must be cleaned periodically. If the ATC Super Red 250 is ridden in dusty areas, the element must be cleaned at more frequent intervals than specific in the MAINTENANCE SCHEDULE.

To clean the filter element:

1. **Remove the seat by pulling the lever (1).**
2. Remove the four retainer clips (2) attaching the air cleaner case.
3. Remove the screws (3) and remove the air cleaner assembly from the frame.
4. Remove the filter element (4) by removing the screw (5), wash it in non-flammable or high flash point solvent and allow it to dry thoroughly.

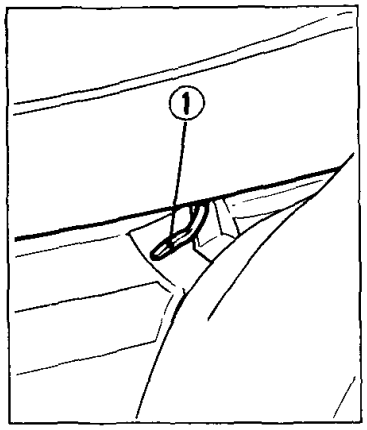

(1) Lever

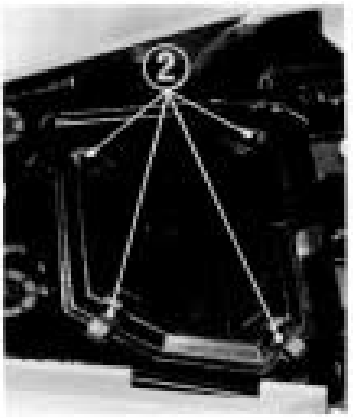

(2) Retainer clips

WARNING

* ***Never use gasoline or low flash point solvents for cleaning the air cleaner element. A fire or explosion could result.***

5. Soak the filter element in clean gear oil (SAE 80–SAE90) until saturated, then squeeze out the excess oil.
6. Reassemble by reversing the disassembly sequence.

CAUTION:

* *Do not twist the filter element when squeezing the filter element.*

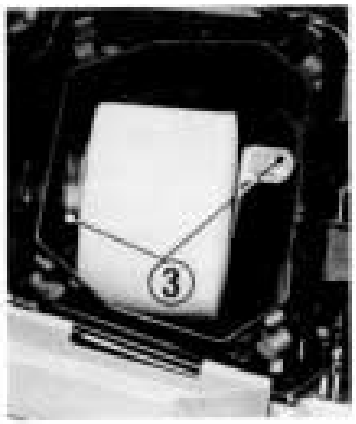

(3) Screws

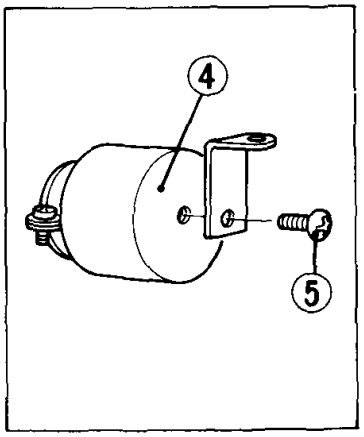

(4) Filter element
(5) Screw

Downloaded from www.Manualslib.com manuals search engine

VALVES

Valve clearance should be maintained at 0.08 mm (0.003 in). Excessive clearance will cause noise. Insufficient clearance will cause loss of power and could cause valve damage.

NOTE:

* Check and adjust valve clearances while the engine is cold. The clearance will change as the temperature rises.

1. Turn the fuel valve "OFF" and remove the seat and fuel tank.

WARNING

* ***Gasoline is extremely flammable and is explosive under certain conditions. Perform this operation in a well-ventilated area. Do not smoke or allow flames or sparks in the area.***

2. Remove the crankshaft hole cap (1) and timing mark hole cap (2).
3. Remove the valve adjuster covers.
4. Rotate the alternator rotor clockwise until the T mark (3) on the alternator rotor lines up with the timing index mark (4) on the cover. In this position, the piston may either be on the compression or the exhaust stroke. The adjustment must be made when the piston is on top of the compression stroke and both the intake and exhaust valves are closed. This can be determined by moving the rocker arms by hand. If they are free, it is an indication that the valves are closed and that the piston is on the compression stroke. If they are tight and the valves are open, rotate the alternator rotor 360° (one complete revolution) and realign the T mark to the timing index mark.
5. Check the clearance of both valves by inserting a 0.08 mm (0.003 in) feeler gauge (7) between the adjusting screw and valve stem.

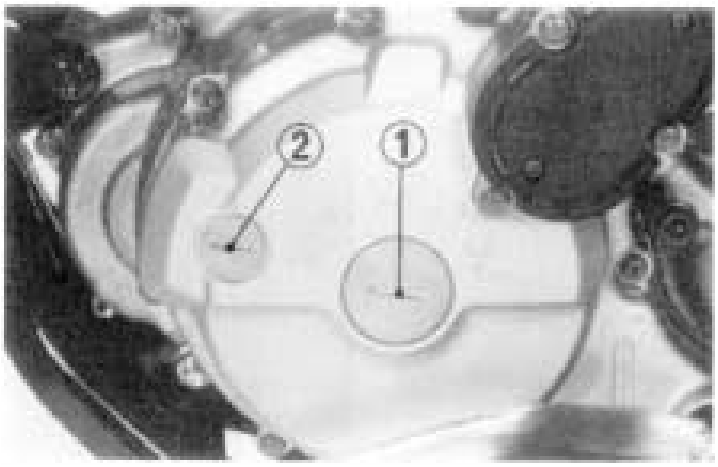

(1) Crankshaft hole cap (2) Timing mark hole cap

Downloaded from www.Manualslib.com manuals search engine

6. If adjustment is necessary, loosen the adjusting screw lock nut (5) and turn the screw (6) so that there is a slight resistance when the feeler gauge (7) is inserted.
7. After adjustment, tighten the lock nut while holding the adjusting screw to prevent it from turning.
8. Recheck the clearance to make sure that it has not changed.
9. Reinstall the removed parts.

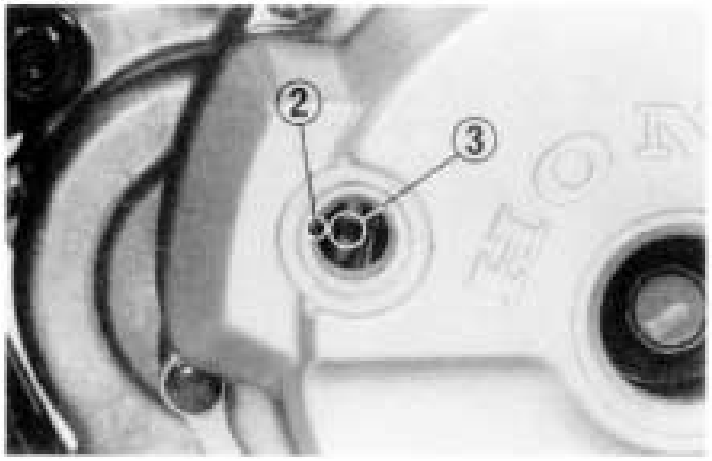

(3) T mark (4) Index mark

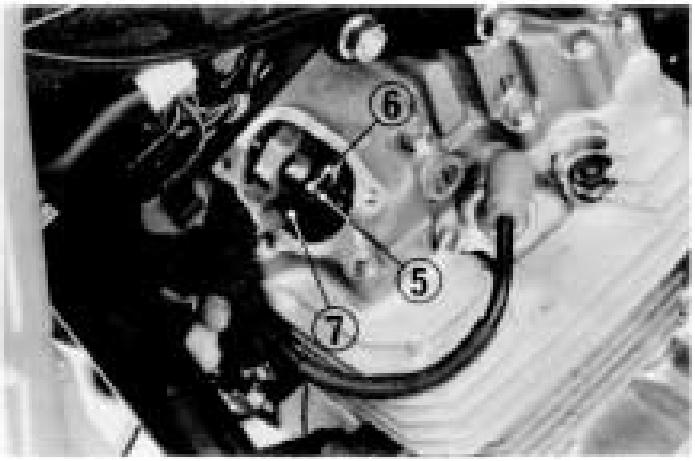

(5) Lock nut (7) Feeler gauge
(6) Adjusting screw

Downloaded from www.Manualslib.com manuals search engine

CLUTCH

1. Make sure the ignition switch is OFF.
2. Loosen the lock nut (1), and turn the clutch adjuster (2) counterclockwise until you feel resistance. Then turn the adjuster 1/8–1/4 turn clockwise, and tighten the lock nut to hold the adjuster in this position.
3. After adjustment, start the engine and test ride the ATC to be certain that the clutch is operating properly.

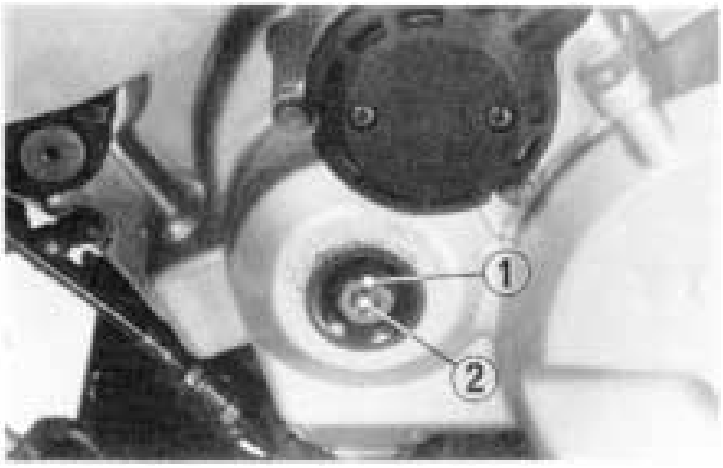

(1) Lock nut (2) Clutch adjuster

Downloaded from www.Manualslib.com manuals search engine

BRAKES

Front Brake Lever

Measure the distance the brake lever moves before the brake starts to take hold.

Free play, measured at the tip of the front brake lever (1), should be within 15–20 mm (5/8–3/4 in.).

Minor adjustments can be made with the upper adjuster (2) on the front brake lever. Loosen the lock nut (3) and turn the upper adjuster (2).

Major adjustment should be made using the lower adjuster (4). Loosen the lock nut (3) and turn the upper adjuster (2) all the way in before making major adjustment.

NOTE:

* Make sure the cut-out on the lower adjuster (4) is seated on the brake arm pin.

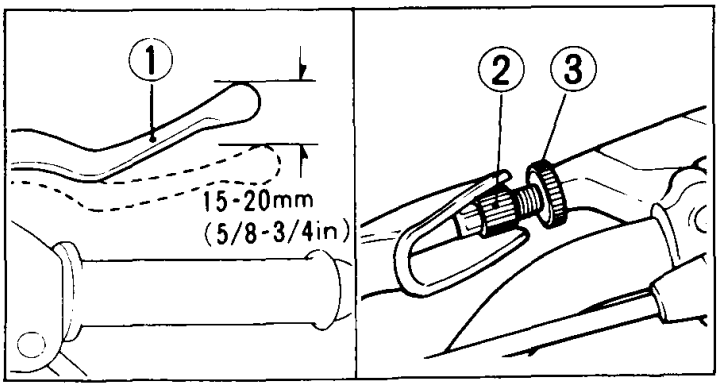

(1) Front brake lever
(2) Upper adjuster
(3) Lock nut

Other Checks:

Check the brake cable for kinks or signs of wear that could cause sticking or failure. Lubricate the brake cable with a commercially available cable lubricant to prevent premature wear and corrosion.

Make sure the brake arm, spring, and fasteners are in good condition.

Wear Indicator:

When the brake is applied, an arrow (7) attached to the brake arm (6) moves toward a reference mark (5) on the brake panel.

If the arrow aligns with the reference mark on full application of the brake, the brake shoes must be replaced. See your authorized Honda dealer for this service.

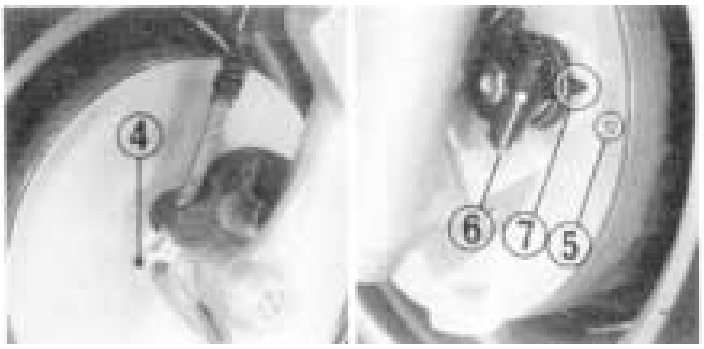

(4) Lower adjuster
(5) Reference mark
(6) Brake arm
(7) Arrow

Downloaded from www.Manualslib.com manuals search engine

Rear Brake Pedal

Measure the distance the rear brake pedal moves before the brake starts to take hold.
Free play, measured at the end of the pedal (1), should be 15–20 mm (5/8–3/4 in.).
Adjust by turning the brake pedal adjuster (2) located on the brake operating rod at the rear of the frame.

NOTE:

* Make sure the cut-out on the adjusting nut is seated on the brake arm pin.

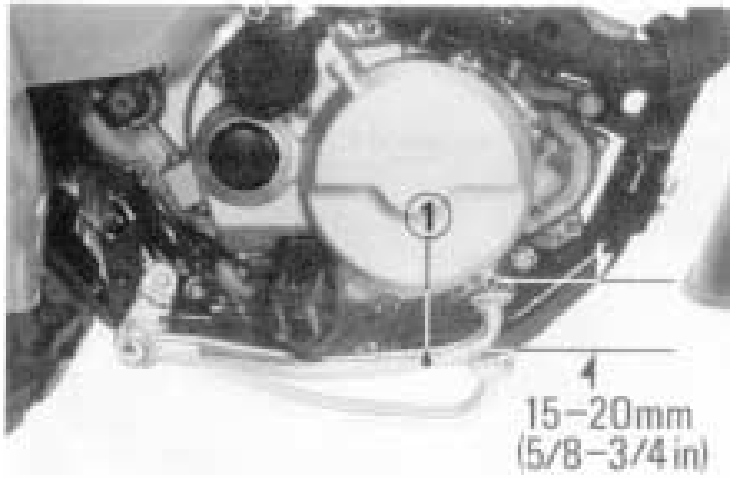

(1) Rear brake pedal

Other Checks:

Check the brake cable for kinks or signs of wear that could cause sticking or failure. Lubricate the brake cable with a commercially available cable lubricant to prevent premature wear and corrosion.
Make sure the brake arm, spring, and fasteners are in good condition.

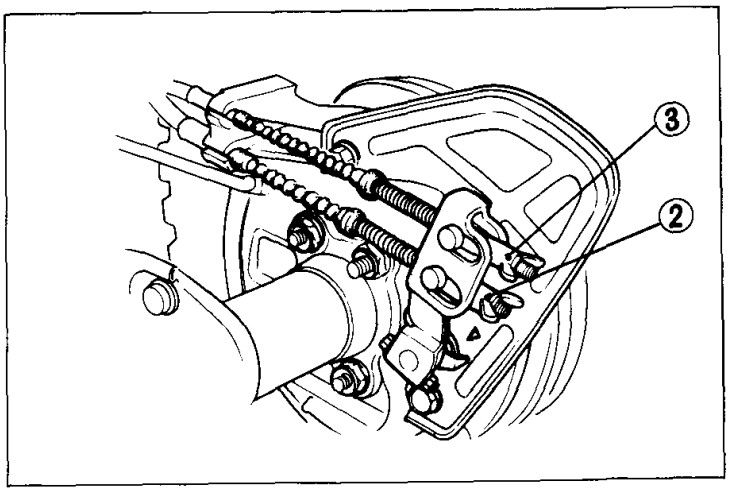

(2) Brake pedal adjuster
(3) Brake lever adjuster

Downloaded from www.Manualslib.com manuals search engine

Rear Brake Lever/Parking Brake

Measure the distance the rear brake lever moves before the brake starts to take hold.

Free play, measured at the tip of the brake lever (4), should be within 15–20 mm (5/8–3/4 in). Minor adjustments can be made with the upper adjuster (6) on the front brake lever. Loosen the lock nut (5) and turn the upper adjuster (6). Major adjustments should be made using the lower adjuster (7) located on the brake arm (8).

Other Checks:

Check the brake cable for kinks or signs of wear that could cause sticking or failure. Lubricate the brake cable with a commercially available cable lubricant to prevent wear and corrosion. Make sure the brake arm, spring, and fasteners are in good condition.

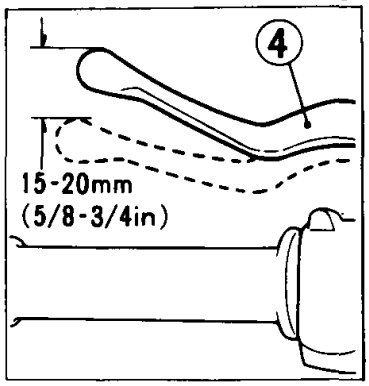

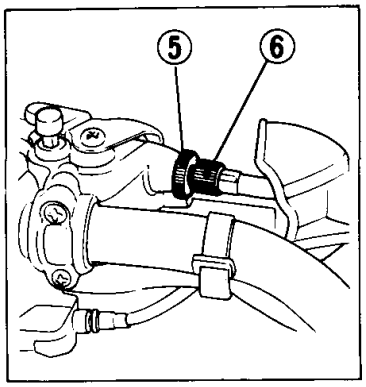

(4) Rear brake lever

(5) Lock nut
(6) Upper adjuster

Wear Indicator:

When the brake is applied, an arrow (10), attached the brake arm (8), moves toward a reference mark (9) on the brake panel.

If the arrow aligns with the reference mark on full application of the brake, the brake shoes must be replaced. See your authorized Honda dealer for this service.

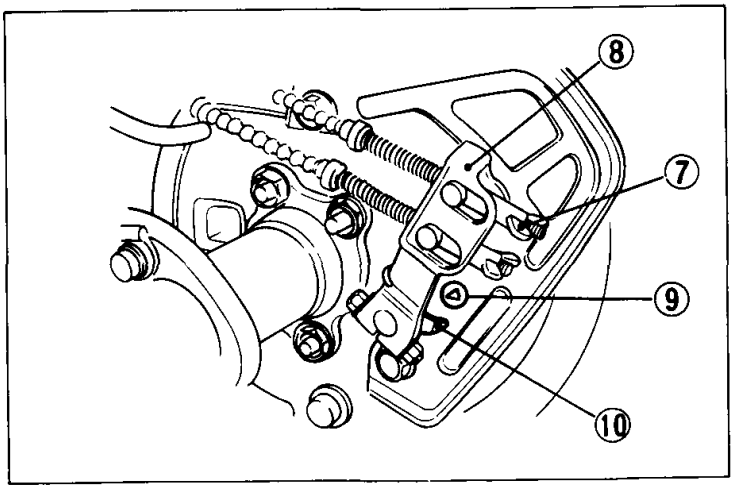

(7) Lower adjuster
(8) Brake arm
(9) Reference mark
(10) Arrow

Downloaded from www.Manualslib.com manuals search engine

THROTTLE CABLE

Inspect the throttle cable for condition and operation. Replace the cable if it has become worn or kinked. Lubricate the cable with a commercially available cable lubricant to prevent premature wear and corrosion. Free play, measured at the tip of the throttle lever (1), should be maintained at 3–8 mm (1/8–5/16 in).

The cable adjuster (3) is located near the right grip. Slide the rubber sleeve (2) back to expose the throttle cable adjuster (3). Turn the adjuster to obtain the correct free play. Reinstall the sleeve after adjustment.

(1) Throttle lever

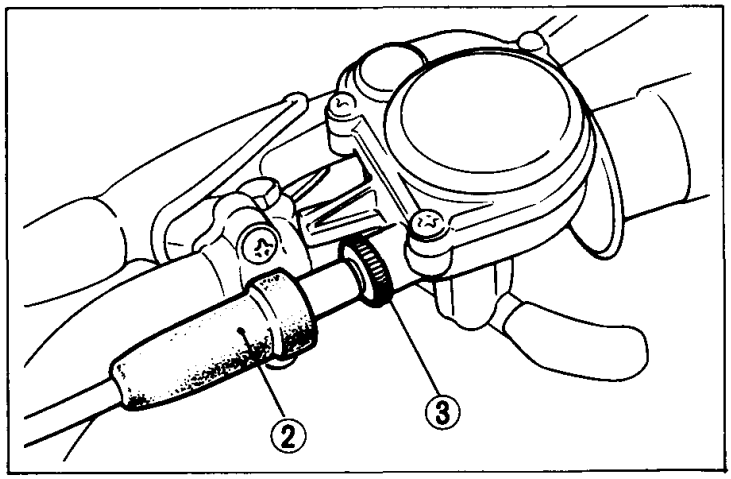

(2) Rubber sleeve
(3) Cable adjuster

Downloaded from www.Manualslib.com manuals search engine

FINAL DRIVE OIL

Change the oil when specified by the maintenance schedule.

NOTE:

* Change the oil with the final drive warm and the ATC on level ground to assure complete and rapid draining.

1. To drain the oil, remove the oil filler cap (1) and drain plug (2).
2. After the oil has completely drained, install the drain plug.

   Drain Plug Torque:
   10–14 N·m (1.0–1.4 kg-m, 7–10 ft-lb)
3. Fill the final drive with approximately 100 cc (3.3 US oz) of the recommended oil.
   Make sure the recommended oil is filled up to the lower edge of the inspection hole (3).
4. Install the oil filler cap.

Recommended oil: HYPOID GEAR OIL SAE80

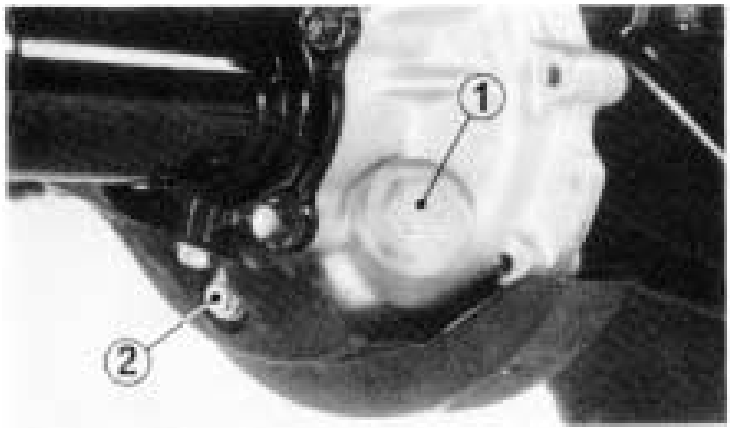

(1) Oil filler cap
(2) Oil drain plug

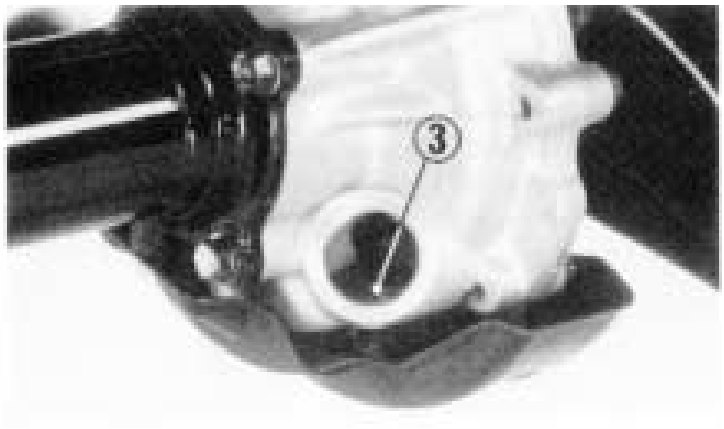

(3) Inspection hole

Downloaded from www.Manualslib.com manuals search engine

Storage

Extended storage, such as for winter, requires that you take certain steps to reduce the effects of deterioration from non-use of the ATC. In addition, necessary repairs should be made BEFORE storing the ATC; otherwise, these repairs may be forgotten by the time the ATC is removed from storage.

1. Change the engine oil and filter.
2. Drain the fuel tank and carburetor. Spray the inside of the tank with an aerosol rust-inhibiting oil. Reinstall the fuel cap on the tank.

WARNING

* ***Gasoline is flammable and is explosive under certain conditions. Do not smoke or allow flames or sparks near the equipment while draining fuel.***

3. Remove the spark plug and pour a tablespoon (15–20 cc) of clean engine oil into the cylinder. Operate the starter for a few seconds to distribute the oil, then reinstall the spark plug.

NOTE:

* When turning the engine over, the Engine Stop Switch should be OFF and the spark plug placed in its cable cap and grounded to prevent damage to the ignition system.

4. Remove the battery. Store in an area protected from freezing temperatures and direct sunlight.
5. Wash and dry the ATC. Wax all painted surfaces.

Downloaded from www.Manualslib.com manuals search engine

6. Inflate the tires to their recommended pressures. Place the ATC on blocks to raise all three tires off the ground.
7. Cover the ATC (don't use plastic or other coated materials) and store in an unheated area, free of dampness with a minimum of daily temperature variation. Do not store the ATC in direct sunlight.

Removal from Storage

1. Uncover and clean the ATC. Change the engine oil if more than 4 months have passed since the start of storage.
2. Check the voltage and slow charge the battery if it is below 12.8V. Install the battery.
3. Drain any excess aerosol rust-inhibiting oil from the fuel tank. Fill the fuel tank with fresh gasoline.
4. Perform all Pre-ride Inspection checks (page 27). Test ride the ATC at low speeds in a safe riding area.

Downloaded from www.Manualslib.com manuals search engine

1. Turn the fuel tank cap lever and fuel valve OFF.
2. Place the carburetor drain tube in a suitable container.
3. Turn the drain screw counterclockwise to drain the gasoline from the carburetor.

WARNING

* *Gasoline is flammable and is explosive under certain conditions. Do not smoke or allow flames or sparks near the equipment while draining fuel.*
* *Never incline the machine with the front wheel up, or rest it on its side without draining the fuel and removing the battery. Fuel vapor or spilled fuel may ignite and the battery may leak electrolyte.*

4. After draining turn the drain screw clockwise until tight.

NOTE:

* Be sure the fuel drain is closed (screw turned clockwise) before refueling the ATC.
* It is not necessary to drain the engine oil from the crankcase, as no appreciable oil leakage will occur when the ATC is rested on its side.

5. Disconnect the negative (–) terminal first and then disconnect the positive (+) terminal.
   Remove the battery.
   When reinstalling the battery, connect the positive (+) terminal first, then the negative (–).
6. If wheel removal is required when transporting, follow the procedures on the following pages.

Downloaded from www.Manualslib.com manuals search engine

Front Wheel Removal

1. Place a support block under the engine to raise the front wheel off the ground.
2. Remove the lower adjuster (1) and disconnect the front brake cable.
3. Loosen the axle holder nuts (2) and remove the axle (3).
4. Remove the axle collars and front wheel.

NOTE:

* Cover the wheel hub as soon as the axle has been removed to prevent the entry of dirt.

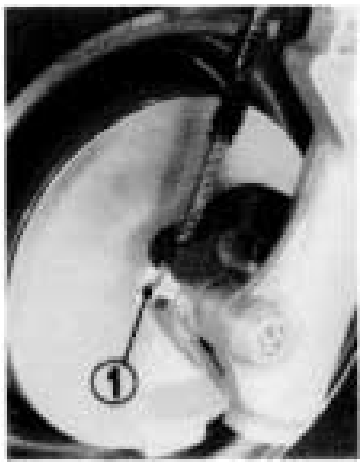

(1) Lower adjuster

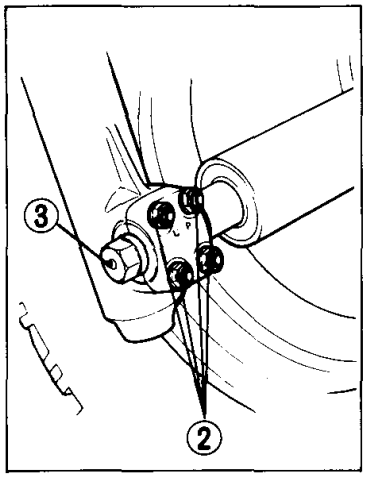

(2) Axle holder nuts
(3) Axle

Installation

1. Install the axle holder with the UP mark (4) facing upwards. Install the axle holder nuts (2). Do not tighten them at this time.
2. Install the front wheel between the front forks aligning the tab (6) on the brake panel with the groove (7) in the left front fork.
3. Install the axle collar (5) and insert the front axle through the left front fork, collar, front wheel and front brake panel.
4. Tighten the axle to 80–100 N·m (8.0–10 kg-m, 58–72 ft-lb) torque.

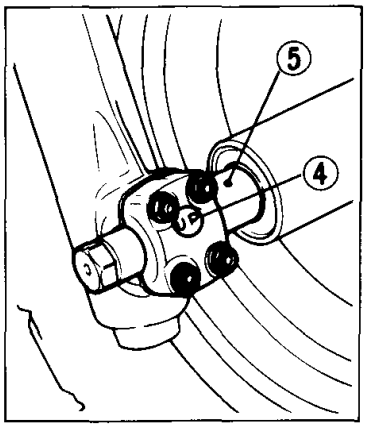

(4) "UP" mark
(5) Axle collar

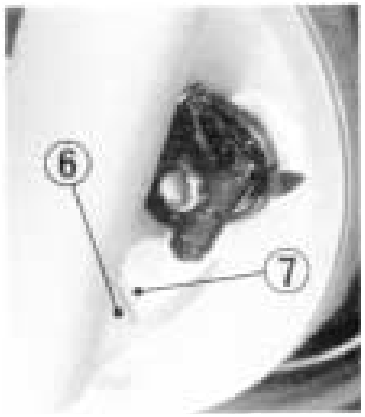

(6) Tab
(7) Groove

Downloaded from www.Manualslib.com manuals search engine

5. Tighten the axle holder nuts to 10–14 N·m (1.0–1.4 kg-m, 7–10 ft-lb) torque.
6. Install the front brake cable and adjust the brake free play.

WARNING

* ***If a torque wrench was not used for installation, see your dealer as soon as possible to verify proper assembly.***

Downloaded from www.Manualslib.com manuals search engine

Rear Wheel Removal

1. Place a support block under the vehicle and raise the rear wheel off the ground.
2. Remove the wheel nuts (1).
3. Remove the wheel.

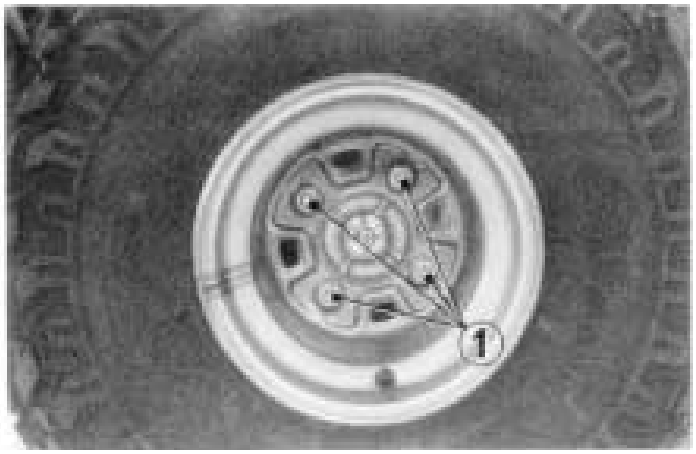

(1) Wheel nuts

Installation Notes:

Reinstall the rear wheels with valve stems to the outside and tighten the wheel nuts (1) in a cross pattern to 60–70 N·m (6.0–7.0 kg-m, 43–50 ft-lb).

WARNING

* ***If a torque wrench was not used for installation, see your dealer as soon as possible to verify proper assembly.***

NOTE:

* Install rear wheels so tire tread directional pattern will be same as front tire.

Downloaded from www.Manualslib.com manuals search engine

SPECIFICATIONS

DIMENSIONS	
Overall length	1,887 mm (72.2 in)
Overall width	1,137 mm (44.7 in)
Overall height	1,038 mm (40.9 in)
Wheelbase	1,237 mm (48.7 in)
WEIGHT	
Dry weight	190 kg (419 lbs)
CAPACITIES	
Engine oil	2.5 ℓ (2.6 US qt)
Fuel tank	12 ℓ (3.1 US gal)
Fuel reserve capacity	2.0 ℓ (0.52 US gal)
Passenger capacity	Operator only
ENGINE	
Bore and stroke	74 x 57.3 mm (2.9 x 2.3 in)
Compression ratio	9.0 : 1
Displacement	246 cc (15 cu-in)
Spark plug gap	0.6–0.7 mm (0.023–0.028 in)
Valve clearance	0.08 mm (0.003 in)

CHASSIS AND SUSPENSION	
Caster angle	19.5°
Trail length	0 mm (0 in)
Tire size, front and rear	25 x 12.00–9
POWER TRANSMISSION	
Primary reduction	2.407
Final reduction	5.683
Gear ratio, 1st	2.388
2nd	1.608
3rd	1.178
4th	0.906
SL	4.083
Reverse gear ratio	7.898

Downloaded from www.Manualslib.com manuals search engine

WIRING DIAGRAM

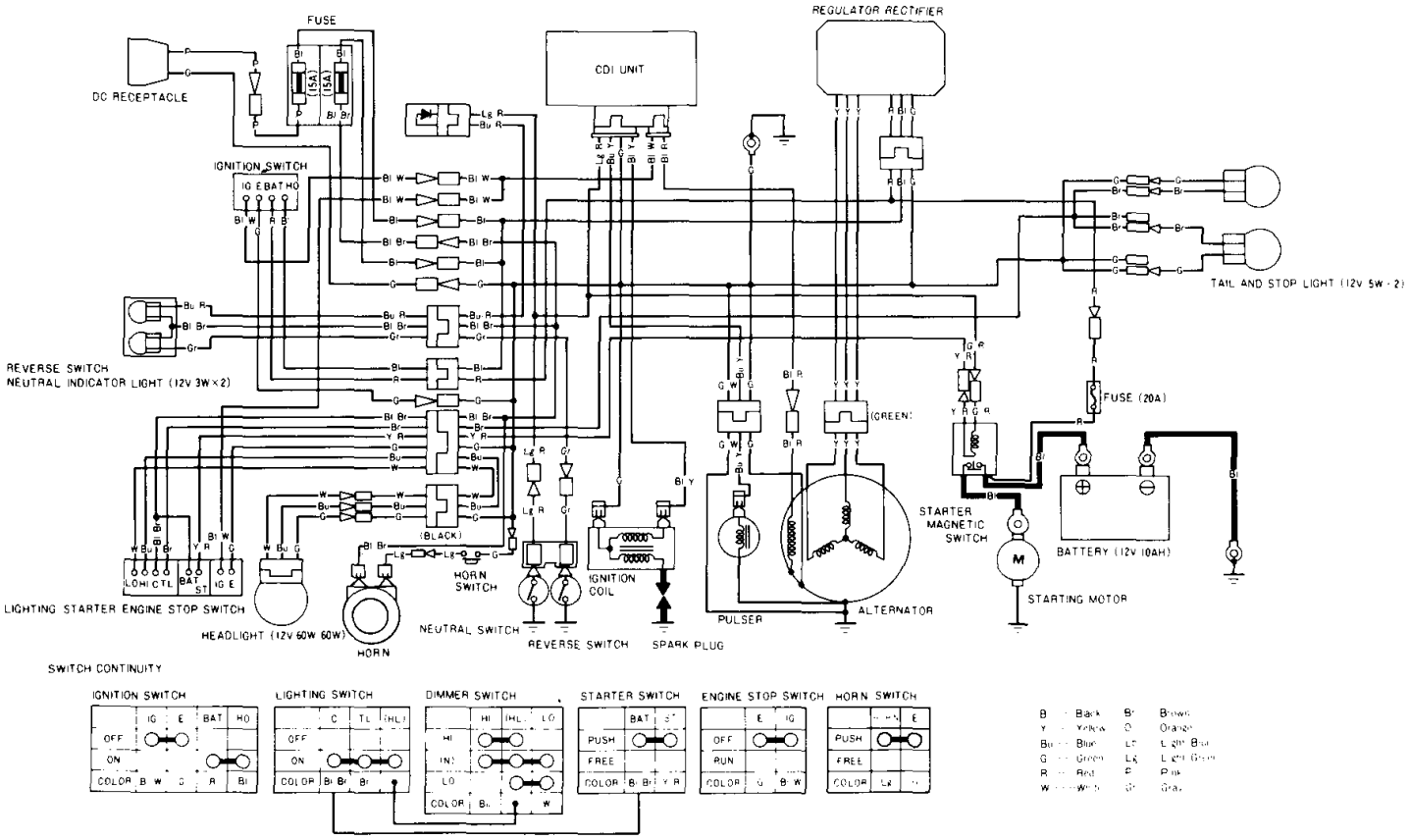

0030Z-HA0-7500

Downloaded from www.Manualslib.com manuals search engine

HONDA

HONDA MOTOR CO., LTD. TOKYO, JAPAN

32HA0801
00X32-HA0-8010

英 M 5008506G
PRINTED IN JAPAN

Downloaded from www.Manualslib.com manuals search engine