YAMAHA

1987 - 1990

MOTORCYCLE

SERVICE MANUAL

Model : CE50T, CG50A, CG50U, CG50W

2YT281972000

CE50T
SERVICE MANUAL

1st Edition, November 1986

NOTICE

This manual was written by the Yamaha Motor Company primarily for use by Yamaha dealers and their qualified mechanics. It is not possible to put an entire mechanic's education into one manual, so it is assumed that persons using this book to perform maintenance and repairs on Yamaha scooter have a basic understanding of the mechanical concepts and procedures inherent in scooter repair technology. Without such knowledge, attempted repairs or service to this model may render it unfit to use and/or unsafe.
Yamaha Motor Company, Ltd. is continually striving to improve all models manufactured by Yamaha. Modifications and significant changes in specifications or procedures will be forwarded to all Authorized Yamaha dealers and will, where applicable, appear in future editions of this manual.

TECHNICAL PUBLICATIONS
SERVICE DIVISION
MOTORCYCLES OPERATIONS
YAMAHA MOTOR CO., LTD.

HOW TO USE THIS MANUAL

PARTICULARLY IMPORTANT INFORMATION

This material is distinguished by the following notation.

NOTE: **A NOTE** provides key information to make procedures easier or clearer.

CAUTION: **A CAUTION** indicates special procedures that must be followed to avoid damage to the scooter.

WARNING: **A WARNING** indicates special procedures that must be followed to avoid injury to a scooter operator or person inspecting or repairing the scooter.

MANUAL FORMAT

All of the procedures in this manual are organized in a sequential, step-by-step format. The information has been compiled to provide the mechanic with an easy to read, handy reference that contains comprehensive explanations of all disassembly, repair, assembly, and inspection operations.
In this revised format, the condition of a faulty component will precede an arrow symbol and the course of action required will follow the symbol, e.g.,

- Bearings
  Pitting/Damage→Replace.

EXPLODED DIAGRAM

Each chapter provides exploded diagrams before each disassembly section for ease in identifying correct disassembly and assembly procedures.

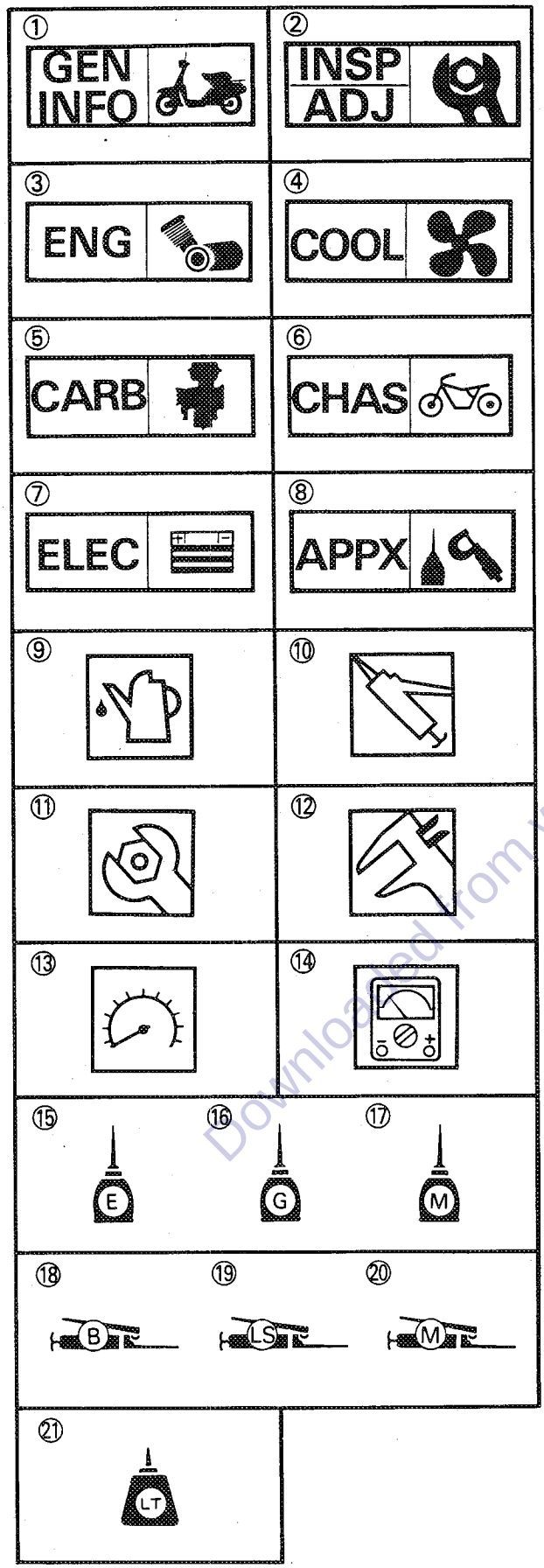

ILLUSTRATED SYMBOLS (Refer to the illustration)

Illustrated symbols ① to ⑧ are designed as thumb tabs to indicate the chapter's number and content.

① General information
② Periodic inspection and adjustment
③ Engine
④ Cooling system
⑤ Carburetion
⑥ Chassis
⑦ Electrical
⑧ Appendices

Illustrated symbols ⑨ to ⑭ are used to identify the specifications appearing in the text.

⑨ Filling fluid
⑩ Lubricant
⑪ Tightening
⑫ Wear limit, clearance
⑬ Engine speed
⑭ Ω, V, A

Illustrated symbols ⑮ to ㉑ in the exploded diagram indicate grade of lubricant and location of lubrication point.

⑮ Apply engine oil
⑯ Apply gear oil
⑰ Apply molybdenum disulfide oil
⑱ Apply wheel bearing grease
⑲ Apply lightweight lithium-soap base grease
⑳ Apply molybdenum disulfide grease
㉑ Apply locking agent (LOCTITE®)

INDEX

CHAPTER 1
GENERAL INFORMATION

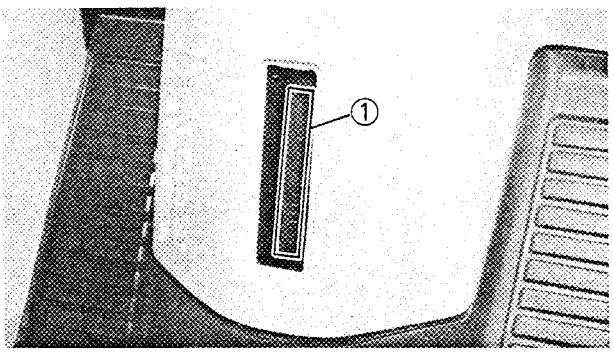

GENERAL INFORMATION

SCOOTER IDENTIFICATION

VEHICLE IDENTIFICATION NUMBER

The vehicle identification number ① is stamped into the frame.

NOTE:

The vehicle identification number is used to identify your scooter and may be used to register your scooter with the licensing outhority in your state.

Starting Serial Number:
JYA2UG00*HA720101

ENGINE SERIAL NUMBER

The engine serial number ② is stamped into the crankcase.

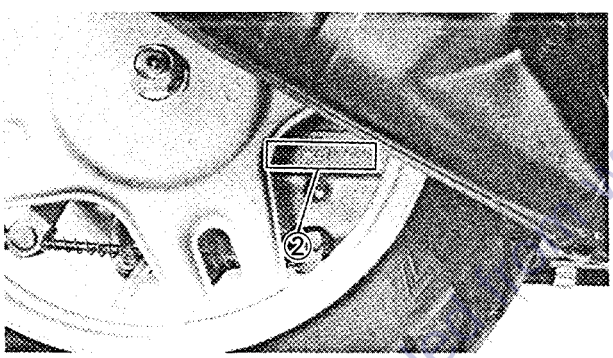

NOTE:

The first three digits of these numbers are for model identifications; the remaining digits are the unit production number.

Starting Serial Number:
14T-720101

NOTE:

Designs and specifications are subject to change without notice.

IMPORTANT INFORMATION

ALL REPLACEMENT PARTS

1. Use only genuine Yamaha parts for all replacements. Use oil and/or grease recommended by Yamaha for assembly and adjustment. Other brands may be similar in function and appearance, but inferior in quality.

GASKETS, OIL SEALS, AND O-RINGS

1. All gaskets, seals, and O-rings should be replaced when an engine is overhauled. All gasket surfaces, oil seal lips and O-rings must be cleaned.

2. Properly oil all mating parts and bearings during reassembly. Apply grease to the oil seal lips.

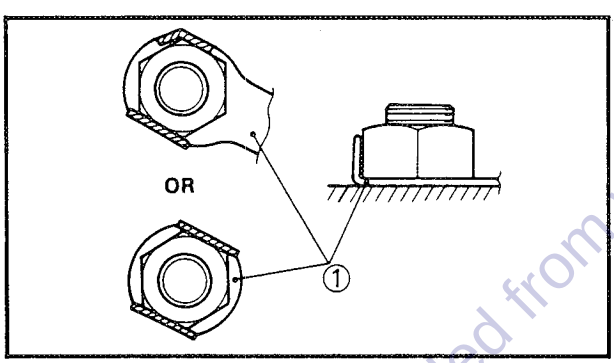

LOCK WASHERS/PLATES AND COTTER PINS

1. All lock washers/Plates ① and cotter pins must be replaced when they are removed. Lock tab(s) should be bent along the bolt or nut flat(s) after the bolt or nut has been properly tightened.

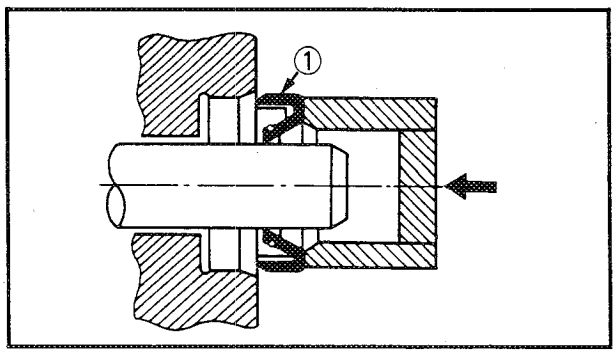

BEARINGS AND OIL SEALS

1. Install the bearing(s) and oil seal(s) with their manufacturer's marks or numbers facing outward. (In other words, the stamped letters must be on the side exposed to view.) When installing oil seal(s), apply a light coating of light-weight lithium base grease to the seal lip(s). Oil the bearings liberally when installing.

① Oil seal

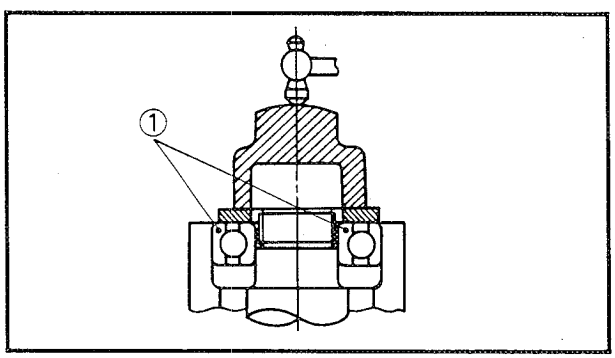

CAUTION:

Do not use compressed air to spin the bearings dry. This causes damage to the bearing surfaces.

① Bearing

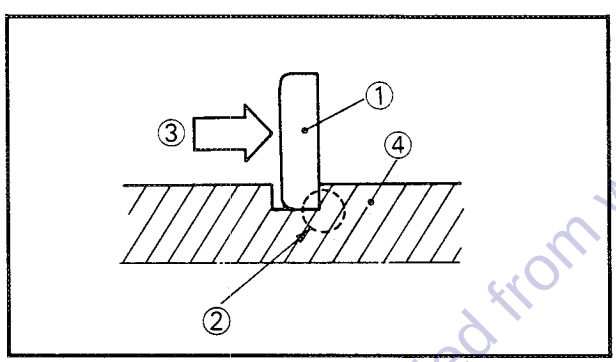

CIRCLIPS

1. All circlips should be inspected carefully before reassembly. Always replace piston pin clips after one use. Replace distorted circlips. When installing a circlip ①, make sure that the sharp edged corner ② is positioned opposite to the thrust ③ it receives. See the sectional view.

④ Shaft

SPECIAL TOOLS

The proper special tools are necessary for complete and accurate tune-up and assembly. Using the correct special tool will help prevent damage caused by the use of improper tools or improvised techniques.

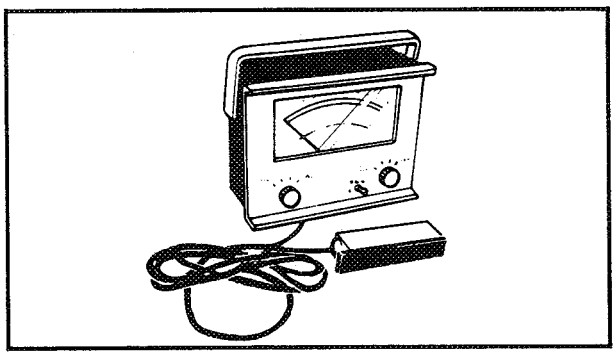

FOR TUNE-UP

1. Inductive Tachometer
   P/N. YU-08036

This tool is needed for detecting engine rpm.

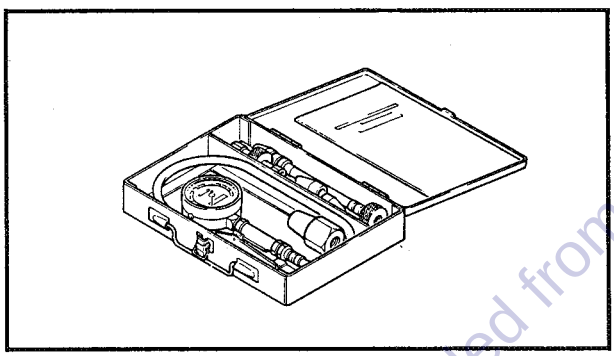

2. Compression Gauge
   P/N. YU-33223

This gauge is used to measure engine compression.

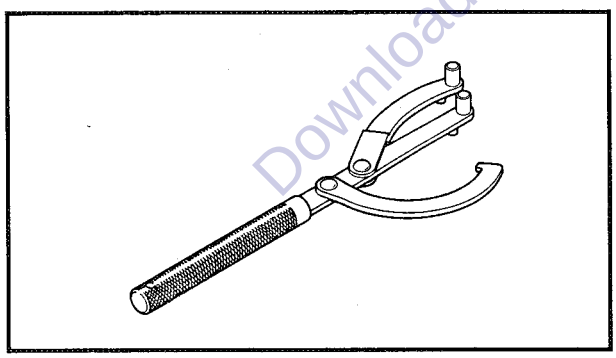

FOR ENGINE SERVICE

1. Flywheel Holding Tool
   P/N. YU-01235

This tool is used to the hold the flywheel magneto and clutch assembly when removing or installing the securing nut.

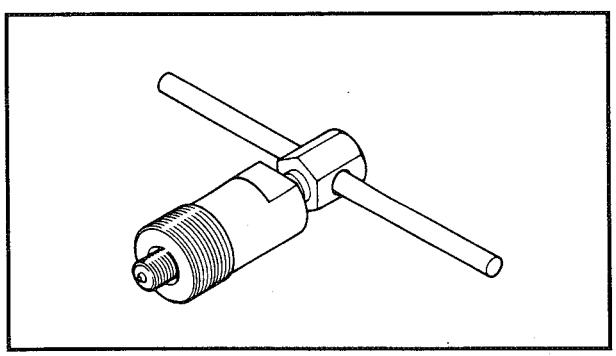

2. Flywheel Magneto Puller
   P/N. YM-01189

This tool is used to remove the flywheel.

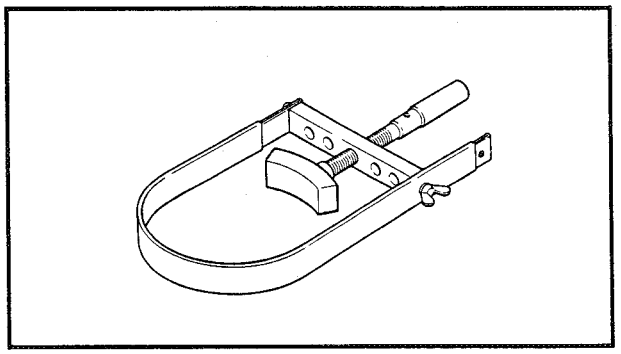

3. Primary Sheave Holder
   P/N. YS-01880

This tool is used when holding the clutch hub.

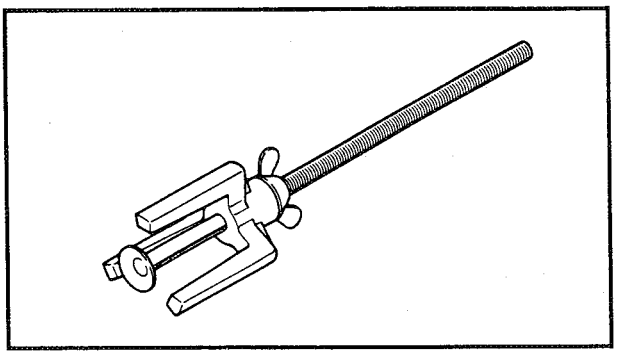

4. Clutch Spring Holder
   P/N. YS-28891

This tool is used to disassembly and assembly the secondary sheave.

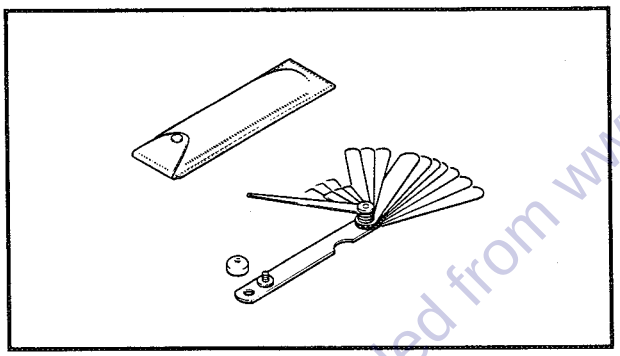

5. Thickness Gauge
   P/N. YU-03001

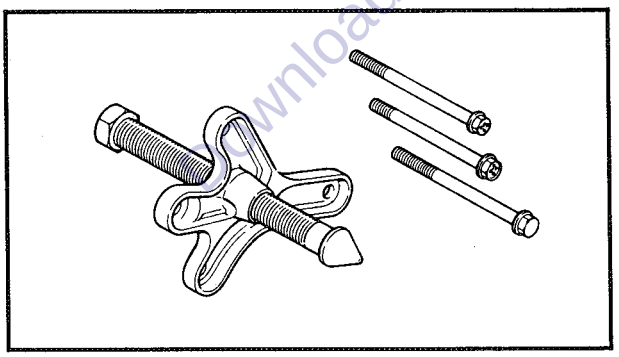

6. Universal Puller Set
   P/N. YU-33270

This tool is used to remove the crankshaft from the crankcase.

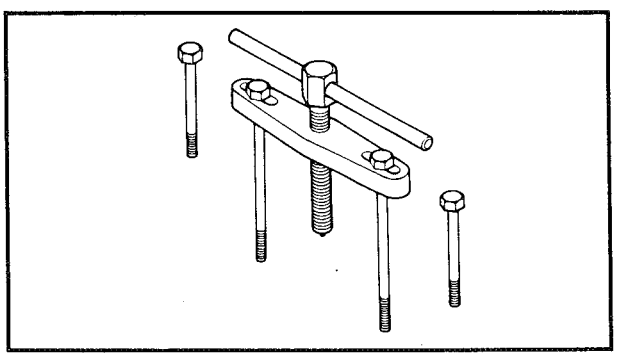

7. Crankcase Separating Tool
   P/N. YU-01135

This tool is used to remove the crankshaft or separate the crankcase.

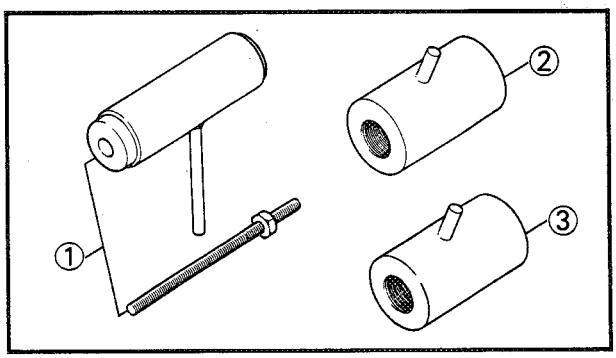

8. Crankshaft Installation Set
   P/N. YU-90050 ..... ①
   Adapter (M10)
   P/N. YM-90062 ..... ②
   Adapter (M12)
   P/N. YM-90063 ..... ③

These tools are used to install the crankshaft.

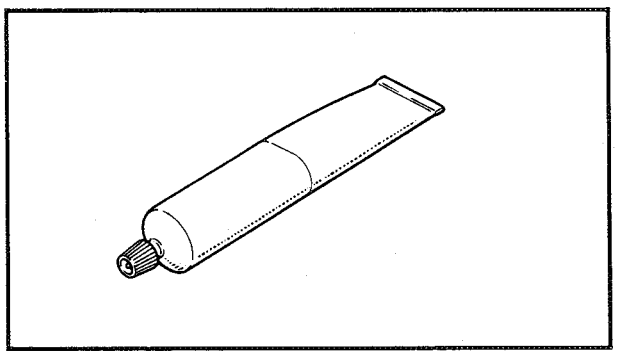

9. Sealant (Quick Gasket®)
   P/N. ACC-11001-05-01

This sealant (bond) is used for crankcase mating surfaces.

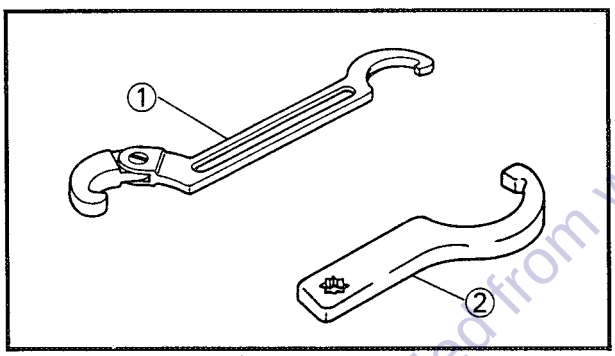

FOR CHASSIS SERVICE

1. Ring Nut Wrench
   P/N. YU-01268 ..... ①
   P/N. YU-33975 ..... ②

This tool is used to loosen and tighten the steering ring nut.

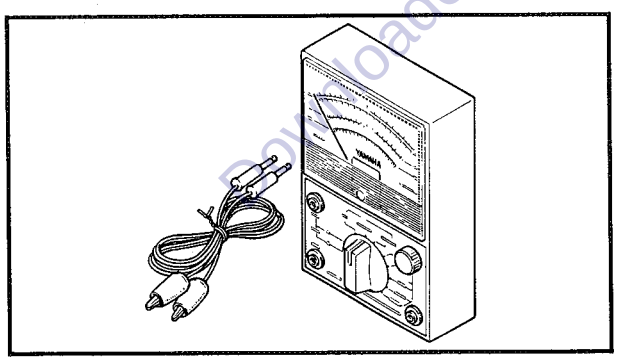

FOR ELECTRICAL COMPONENTS

1. Pocket Tester
   P/N. YU-03112

This instrument is invaluable for electrical system inspection and adjustment.

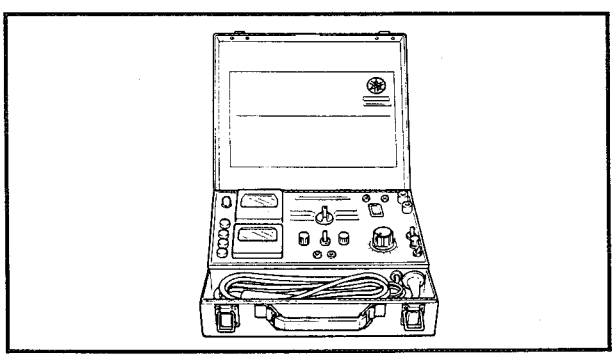

2. Electro Tester
   P/N. YU-33260

This instrument is necessary for ignition system inspection.

CHAPTER 2
PERIODIC INSPECTIONS AND ADJUSTMENTS

PERIODIC INSPECTIONS AND ADJUSTMENTS

INTRODUCTION

This chapter includes all information necessary to perform recommended inspections and adjustments. These preventive maintenance procedures, if followed, will ensure more reliable vehicle operation and a longer service life. The need for costly overhaul work will be greatly reduced. This information applies to vehicles already in service as well as new vehicles that are being prepared for sale. All service technicians should be familiar with this entire chapter.

PERIODIC MAINTENANCE/LUBRICATION INTERVALS

Unit: km (mi)

ITEM	REMARKS	BREAK-IN 500 (300)	EVERY 3,000 (2,000) or 6 months	EVERY 6,000 (4,000) or 12 months
Spark plug	Check/Clean or replace.	○	○	○
Air filter	Clean. Replace if necessary.		○	○
Carburetor	Check/Adjust/idle speed, starter operation.	○		○
Fuel line	Check fuel hose for cracks or damage.		○	○
Transmission oil	Replace (Warm engine before draining). Every 12,000 (8,000) or 24 months.	Replace	Check	Check
Autolube pump	Check/Adjust/Air bleeding.	○		○
Brake	Check operation. Adjust if necessary.		○	○
Wheels*	Check balance/damage/runout.		○	○
Wheel bearings	Check bearings assembly for looseness/ damage. Replace if damaged.		○	○
Steering bearing	Check bearings assembly for looseness. Moderately repack every 12,000 (8,000) or 24 months.**	Check	Check	Check
Rear shock absorber	Check operation.		○	○
Fittings/Fasteners	Check all chassis fittings and fasteners.	○	○	○
Battery	Check specific gravity. Check breather pipe for proper operation.		○	○
V-belt	Check damage and wear. Replace if necessary.			○

**: Medium weight wheel bearing grease.

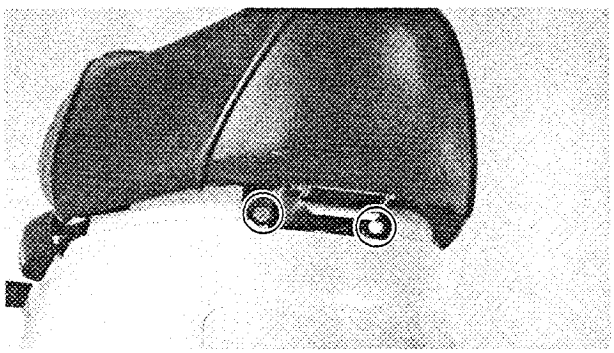

TAIL COVER

REMOVAL

1. Open the seat lock.

2. Remove:
   - Seat

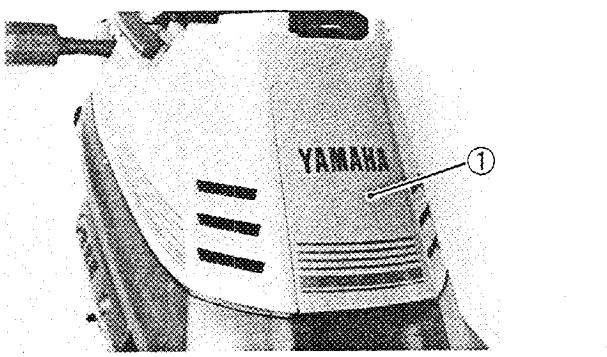

3. Remove:
   - Cover (1)

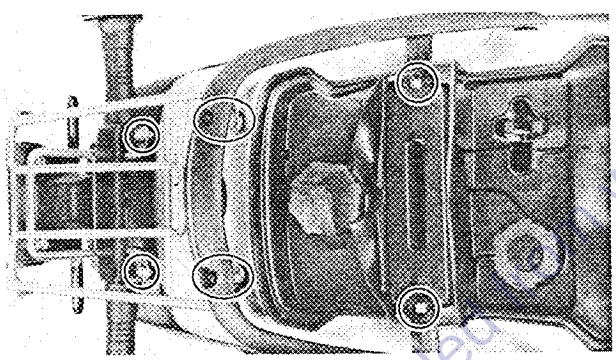

4. Remove:
   - Grab bar
   - Rear carrier
     (With rear flasher lights and taillight)
5. Disconnect:
   - Rear flasher light leads
   - Taillight leads

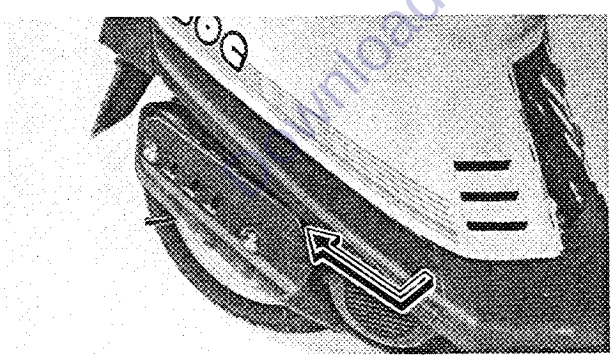

6. Remove:
   - Side covers (Right and left)

NOTE:

When removing the side cover, unhook it at the front and slide it forward.

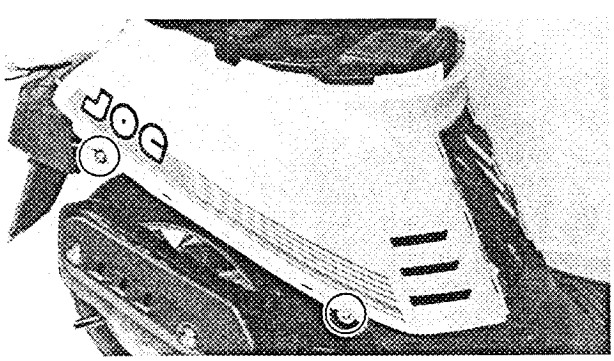

7. Remove:
   - Tail cover

INSTALLATION

When installing the tail cover, reverse the "REMOVAL" procedure.
Note the following points.

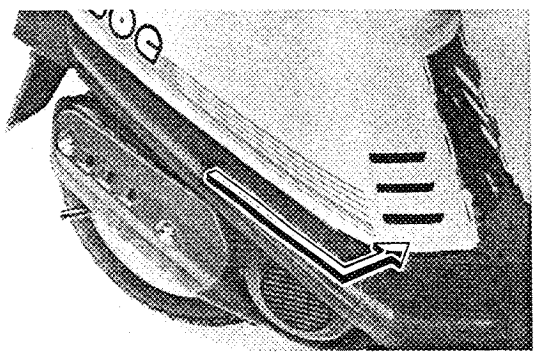

1. Install:
   - Side covers

NOTE:

After installing the side covers, make sure that all hooks are securely fitted.

2. Connect:
   - Rear flasher light leads

NOTE:

The leads of identical colors should be connected.

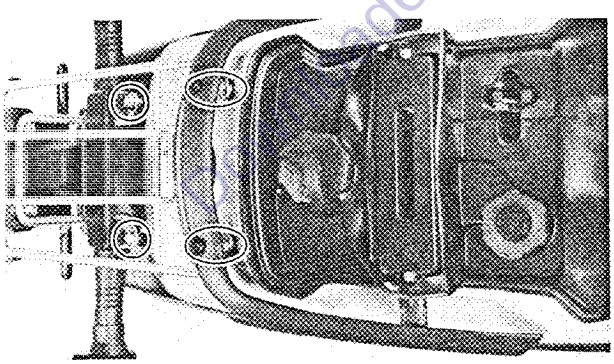

3. Install:
   - Rear carrier

	7 Nm (0.7 m•kg, 5.1 ft•lb)

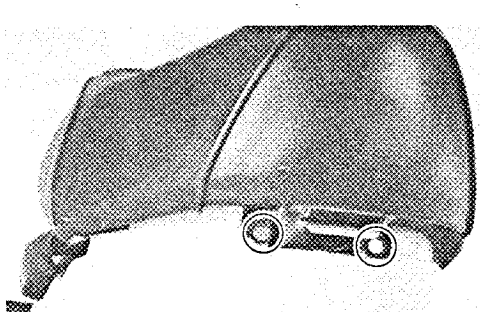

4. Install:
   - Seat

	7 Nm (0.7 m•kg, 5.1 ft•lb)

FRONT FENDER, FRONT PANEL AND FOOTREST BOARD

REMOVAL

1. Remove:
   - Tail cover
     Refer to "TAIL COVER" section.

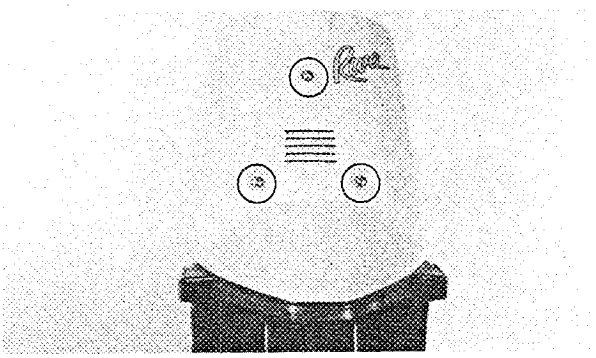

2. Remove:
   - Front fender

NOTE:

Before removing the fender, make sure that all hooks are free.

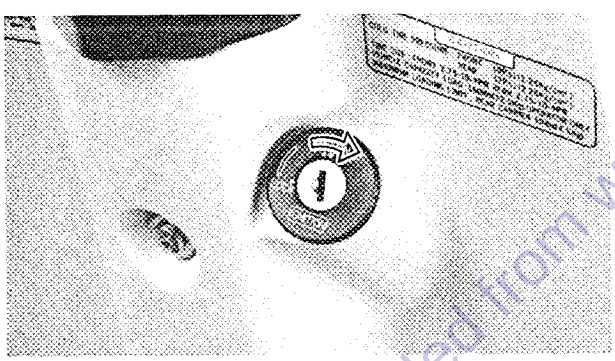

3. Remove:
   - Main switch cap
     Turn the cap counterclockwise.

4. Remove:
   - Front panel

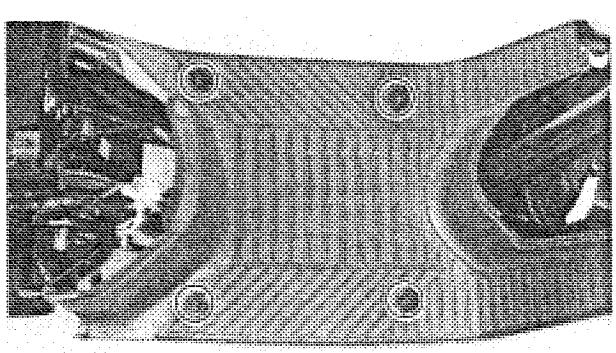

5. Remove:
   - Footrest board

FRONT FENDER, FRONT PANEL AND FOOTREST BOARD/HANDLEBAR COVERS

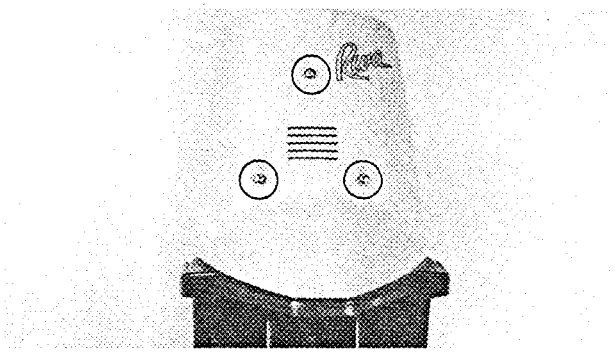

INSTALLATION

Reverse the "REMOVAL" procedure.
Note the following points.

1. Install:
   - Front fender

NOTE:

After installing the front fender, make sure that all hooks are securely fitted.

HANDLEBAR COVERS

REMOVAL

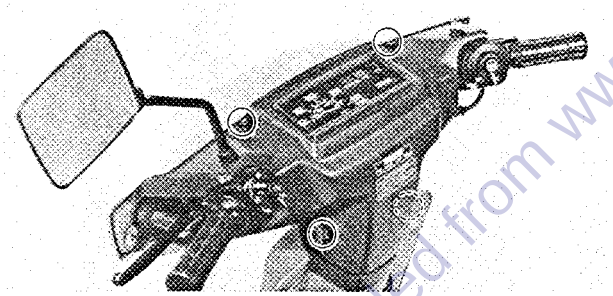

1. Remove:
   - Screws (Handlebar cover — Front)
   - Rear view mirror(s)

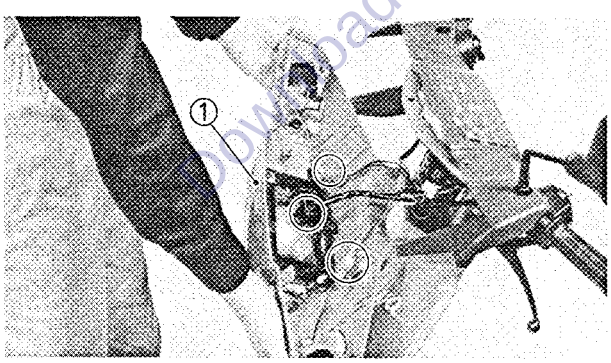

2. Disconnect:
   - Headlight lead and flasher light leads
3. Remove:
   - Handlebar cover (Front) ①

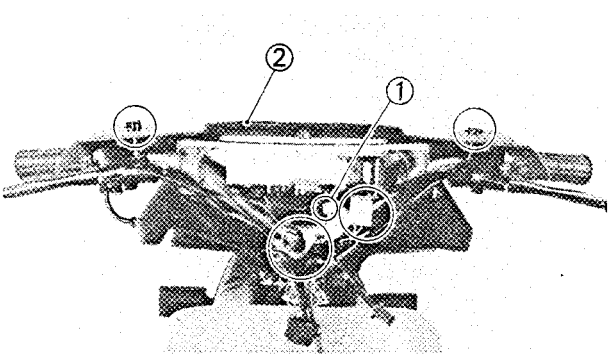

4. Disconnect:
   - Leads
   - Speedometer cable ①
5. Remove:
   - Handlebar cover (Rear) ②

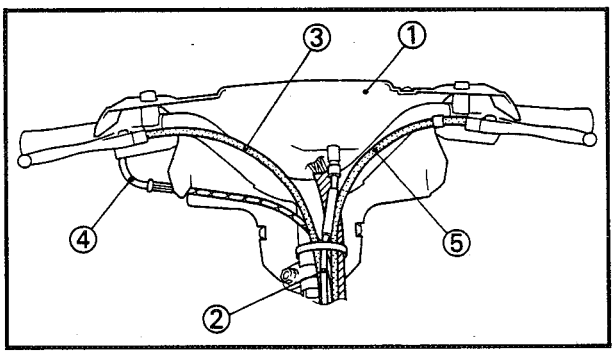

INSTALLATION

1. Install:
   - Handlebar cover (Rear) ①
2. Connect:
   - Leads
   - Speedometer cable ②

NOTE:

Position the cables as shown.

③ Front brake cable
④ Throttle cable
⑤ Rear brake cable

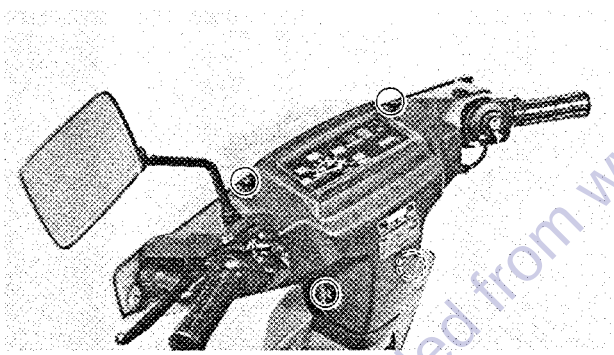

3. Connect:
   - Headlight lead and flasher light leads
4. Install:
   - Handlebar cover (Front)
   - Rear view mirror(s)

ENGINE

ENGINE IDLE SPEED ADJUSTMENT

1. Remove:
   - Tail cover
     Refer to "TAIL COVER" section.

2. Start the engine and warm it up before checking the idle speed.

NOTE:

A warm engine is defined as one which had been operated for about 3 minutes at 3,000 r/min with no load.

ENGINE IDLE SPEED ADJUSTMENT/ THROTTLE CABLE FREE PLAY ADJUSTMENT

3. Attach:
   - Inductive Tachometer (YU-08036)

4. Check:
   - Engine idle speed
     Out of specification → Adjust.

	Engine Idle Speed: **1,500 ~ 2,100 r/min**

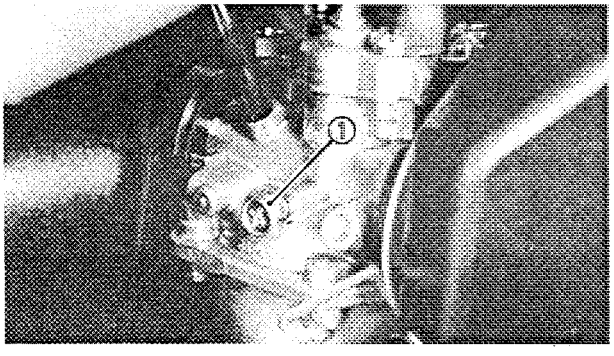

Engine idle speed adjustment steps;
- Start the engine at idle speed.
- Turn the throttle stop screw ① clockwise to increase engine speed and counterclockwise to decrease engine speed.

5. Install:
   - Tail cover
     Refer to "TAIL COVER" section.

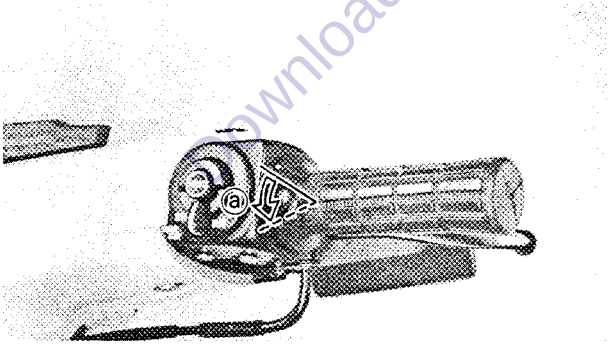

THROTTLE CABLE FREE PLAY ADJUSTMENT

1. Check:
   - Throttle cable free play ⓐ
     Out of specification → Adjust.

	Throttle Cable Free Play ⓐ: **3.0 ~ 7.0 mm (0.12 ~ 0.28 in)**

Throttle cable free play adjustment steps;
NOTE:
Before adjusting the throttle cable free play, the engine idle speed should be adjusted.

AUTOLUBE PUMP CABLE ADJUSTMENT

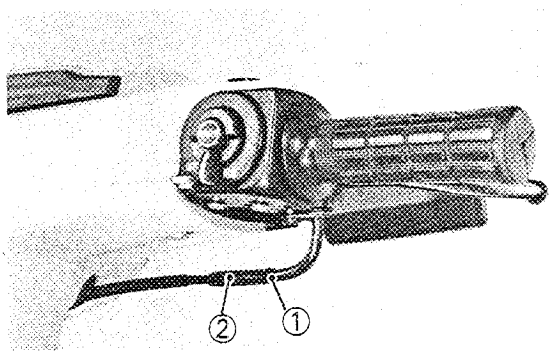

- Loosen the locknut ①.
- Turn the adjuster ② in or out until the correct free play is obtained.
- Tighten the locknut.

AUTOLUBE PUMP CABLE ADJUSTMENT

NOTE:

Before adjusting the pump cable, adjust the throttle cable free play.

1. Remove:
   - Tail cover
     Refer to "TAIL COVER" section.
   - Front fender
   - Front panel
   - Footrest board
     Refer to "FRONT FENDER, FRONT PANEL AND FOOTREST BOARD" section.

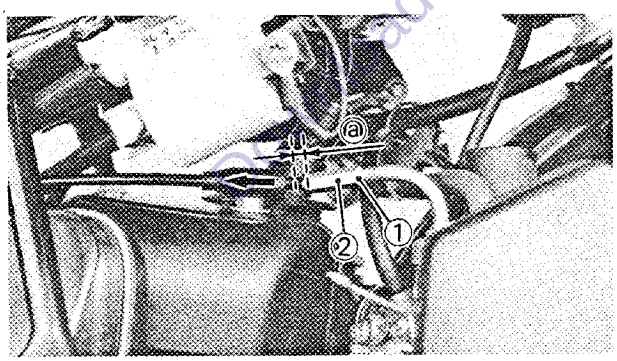

2. Check:
   - Throttle cable free play ⓐ
     (at carburetor side)
     Out of specification→Adjust.

Throttle Cable Free Play ⓐ:
1.0 mm (0.04 in)

Throttle cable free play adjustment steps;
- Loosen the locknut ①.
- Turn the adjuster ② in or out until the correct free play is obtained.
- Tighten the locknut.

AUTOLUBE PUMP CABLE ADJUSTMENT/ AUTOLUBE PUMP AIR BLEEDING

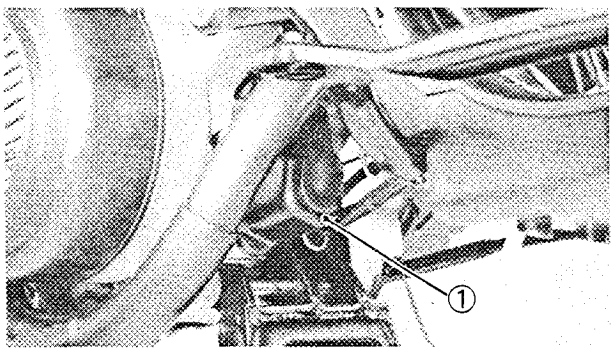

3. Remove:
   - Autolube pump cover ①

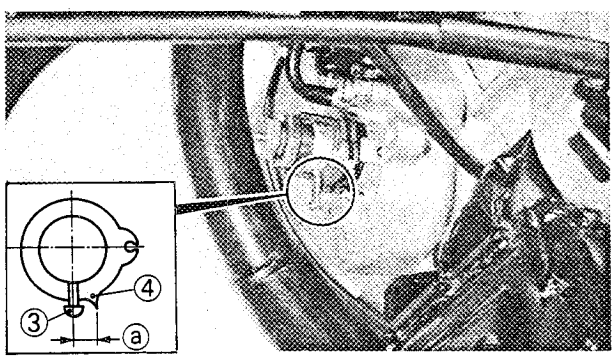

4. Close the throttle grip completely.
5. Check:
   - Autolube pump pulley position ⓐ
     Out of position→Adjust.

Autolube Pump Pulley Position
ⓐ:
0.0~1.0 mm (0.0~0.04 in)

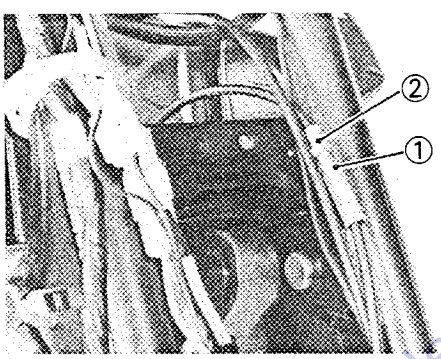

Autolube pump pulley position adjustment steps:
- Loosen the locknut ①.
- Turn the adjuster ② in or out until the pump plunger pin ③ is aligned with the mark ④ on the pump pully.
- Tighten the locknut.

6. Install:
   - Autolube pump cover
   - Footrest board
   - Front panel
   - Front fender
   - Tail cover
     Refer to "FRONT FENDER, FRONT PANEL AND FOOTREST BOARD" and "TAIL COVER" section.

AUTOLUBE PUMP AIR BLEEDING

The Autolube pump and delivery lines must be bled on the following occasions:
- Whenever the Autolube tank has run dry.
- Whenever any portion of the Autolube system is disconnected.
- If the scooter lies on its side after falling over.

AUTOLUBE PUMP AIR BLEEDING

1. Remove:
   - Tail cover
   - Front fender
   - Front panel
   - Footrest board

   Refer to "TAIL COVER" and "FRONT FENDER, FRONT PANEL AND FOOTREST BOARD" section.

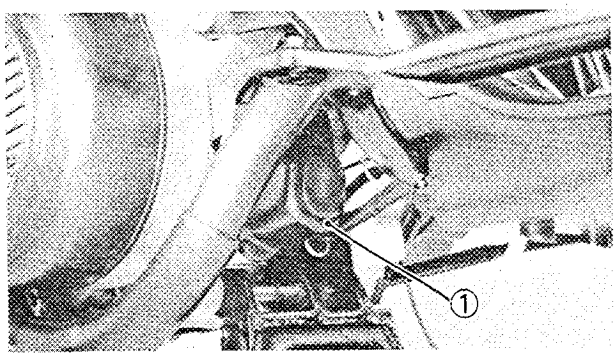

2. Remove:
   - Autolube pump cover ①

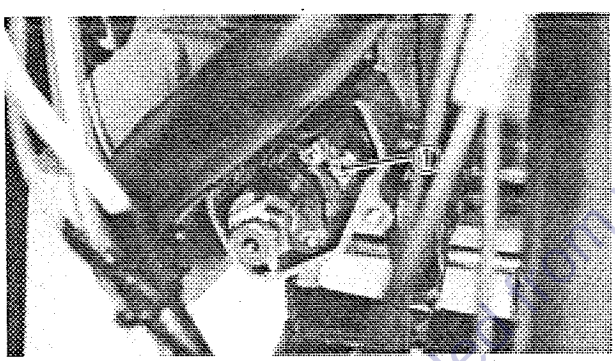

3. Remove:
   - Bleed screw ①

NOTE:

Place a rag under the Autolube pump.

4. Start the engine at idle speed.

5. Air bleed:

   Keep the oil running out until air bubbles disappear.

NOTE:

Pull the pump cable all the way out to set the pump stroke to a maximum.

6. Inspect:
   - Bleed screw gasket

   Damage→Replace.

7. Install:
   - Bleed screw gasket
   - Bleed screw

8. Keep the engine running at about 2,000 r/min for two minutes or so, and both distributor and delivery pipe can be completely bled.

NOTE:

It is difficult to bleed the distributor completely with the pump stroke at a minimum, and therefore the pump stroke should be set to a maximum.

9. Install:
   - Autolube pump cover
   - Footrest board
   - Front panel
   - Front fender
   - Tail cover

   Refer to "FRONT PANEL, FRONT FENDER ANT FOOTREST BOARD" and "TAIL COVER" section.

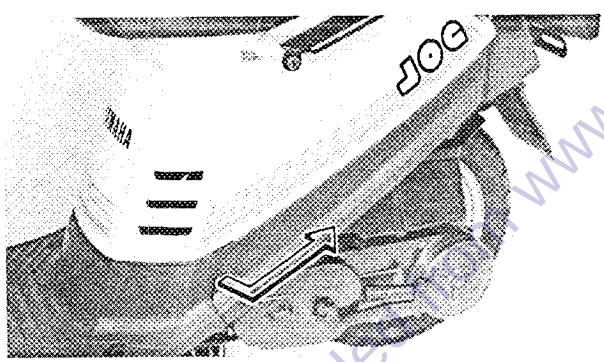

AIR CLEANER ELEMENT CLEANING

1. Remove:
   - Side cover (Left)

NOTE:

When removing the side cover, unhook it at the front and slide it forward.

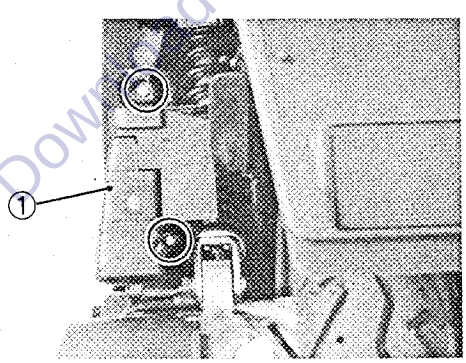

2. Remove:
   - Air cleaner case cover ①
   - Air cleaner element

CAUTION:

Never operate the engine with the air cleaner element removed. This will allow unfiltered air to enter, causing rapid wear and possible engine damage. Additionally, operation without the cleaner element will affect carburetor jetting with subsequent poor performance and possible engine overheating. Be careful not to have rags or the like blocking the intake area of the air cleaner.

3. Clean:
   - Air cleaner element

Air cleaner element cleaning steps:
- Wash the element gently, but thoroughly in solvent.

WARNING:

Never use low flash point solvents such as gasoline to clean the element. Such solvent may lead to a fire or explosion.

- Squeeze the excess solvent out of the element and let dry.

CAUTION:

Do not twist the element when squeezing the element.

4. Inspect:
   - Element
     Damage → Replace.
5. Apply:
   - Foam-air-filter oil or SAE 10W30 type SE motor oil
     Onto the element.
6. Squeeze out the excess oil.

NOTE:

The element should be wet but not dripping.

7. Install:
   - Air cleaner element
   - Air cleaner case cover
   - Side cover (Left)

FUEL COCK CLEANING

1. Remove:
   - Tail cover
     Refer to "TAIL COVER" section.

FUEL COCK CLEANING

2. Drain:
   - Fuel

WARNING:

FUEL IS HIGHLY FLAMMABLE:
- **Always turn off the engine when draining.**
- **Take care not to spill any fuel on the engine or exhaust pipe/muffler when draining.**
- **Never drain fuel while smoking or in the vicinity of an open flame.**

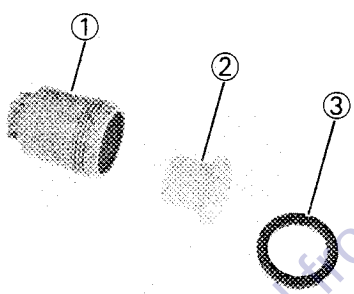

3. Remove:
   - Cap ①
   - Filter ②
   - O-ring ③

4. Clean:
   - Filter
   - Cap

   Wash the filter and cap gently using solvent.

5. Inspect:
   - Filter
   - O-ring

   Damage→Replace.

6. Install:
   - O-ring
   - Filter
   - Cap
   - Tail cover

   Refer to "TAIL COVER" section.

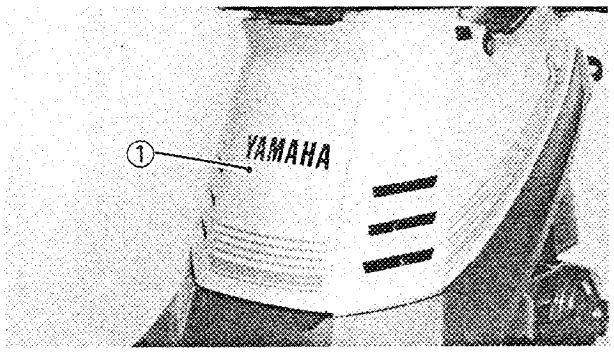

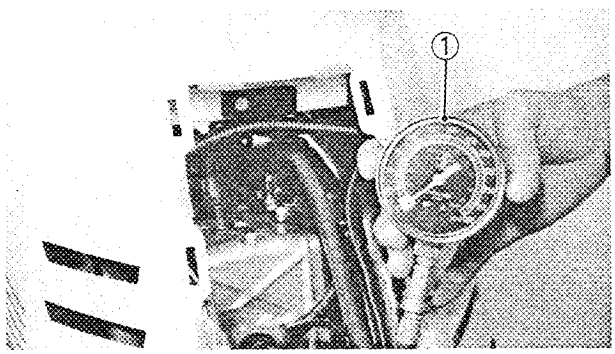

COMPRESSION PRESSURE MEASUREMENT

Insufficient compression pressure will result in performance loss and may indicate worn or damaged piston rings.

1. Remove:
   - Cover (1)
2. Warm up engine for serveral minutes, then stop the engine.
3. Remove:
   - Spark plugs
4. Connect:
   - Compression Gauge (YU-33223) (1)
5. Measure:
   - Compression

NOTE:

Start the starter motor and throttle valve wide-open until the pressure indicated on gauge can rise no further. Compression should be within the specified levels.

Compression Pressure (at sea level):
Standard.....800 kPa (8.0 kg/cm^2, 114 psi)
Minimum .....640 kPa (6.4 kg/cm^2, 91 psi)

WARNING:

When cranking engine, ground spark plug wires to prevent sparking.

Compression test steps (below minimum levels):
- Squirt a few drops of oil into cylinder.
- Measure compression again.

Reading	Diagnosis
Higher than without oil	•Worn cylinder, piston and piston rings
Same as without oil	•Defective piston, ring(s), valve(s) and cylinder head gasket

Compression test steps (above standard levels):
- Check cylinder head or piston crown for carbon deposits.

ENGINE OIL LEVEL INSPECTION

ENGINE OIL LEVEL INSPECTION

1. Place the scooter on the level place.

NOTE:

Be sure the scooter is positioned stratight up and on both wheels when inspecting the oil level.

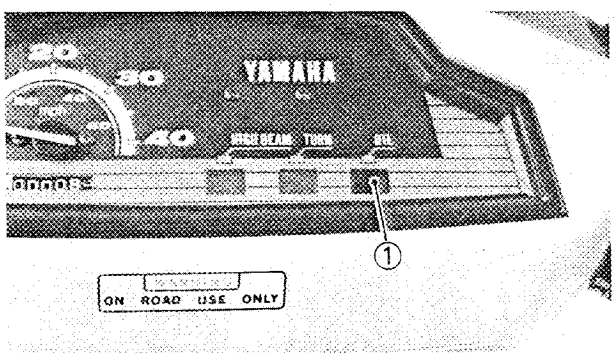

2. Inspect:
   - Engine oil level
     Oil level low→Add sufficient oil by the following inspection steps.

① "OIL" indicator light

Engine oil level visual inspection steps:

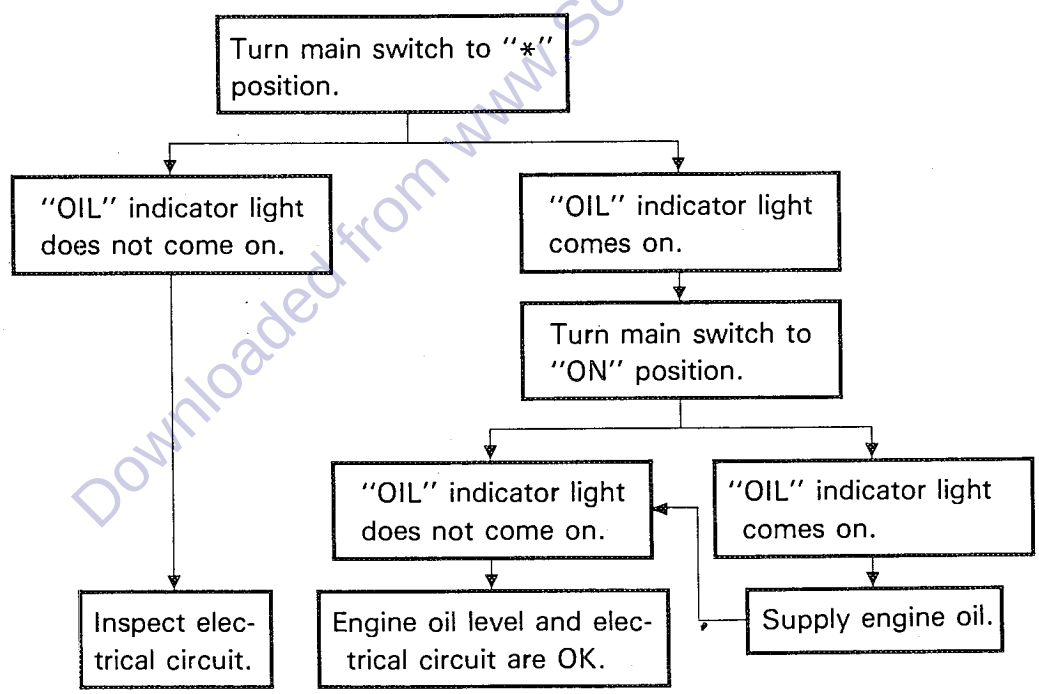

ENGINE OIL LEVEL INSPECTION/ TRANSMISSION OIL REPLACEMENT

INSP ADJ

Recommended Oil:
Yamalube 2 or Air Cooled 2 Stroke Engine Oil
Oil Capacity:
Total:
0.8 L (0.7 Imp qt, 0.84 US qt)

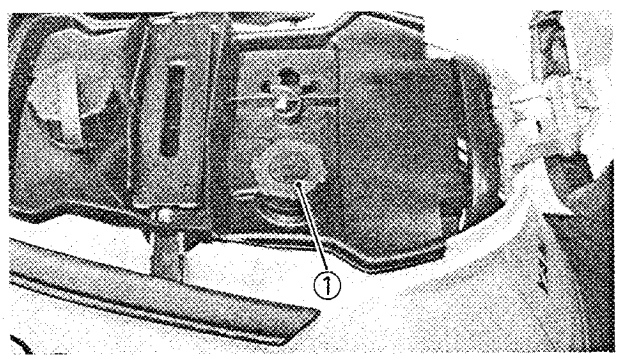

NOTE:

Install the oil tank filler cap (1) and push it fully into the filler.

CAUTION:

Always use the same type of engine oil; mixing oils may result in a harmful chemical reaction and lead to poor performance.

TRANSMISSION OIL REPLACEMENT

1. Warm up the engine at idle speed, then stop it.

2. Place the oil pan under the drain hole.

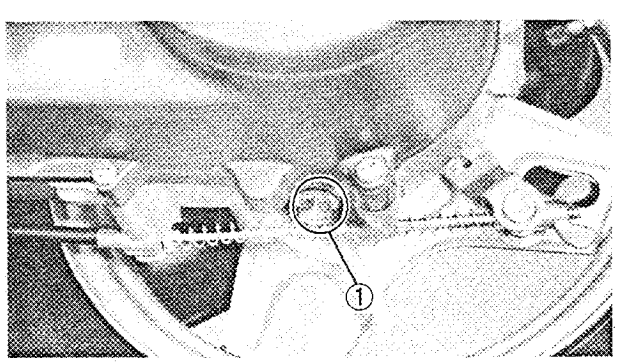

3. Remove:
   - Drain bolt (1)
     Drain the transmission oil.
   - Oil filler plug

4. Inspect:
   - Gasket (Drain bolt)
   - O-ring (Oil filler plug)
   Damage→Replace.

5. Install:
   - Gasket
   - Drain bolt

Drain Bolt:
18 Nm (1.8 m•kg, 13 ft•lb)

6. Fill:
   - Transmission case

Transmission Oil:
Yamalube 4 or SAE 10W30 Type SE Motor Oil
Capacity:
0.1 L (0.09 Imp qt, 0.11 US qt)

NOTE:
Wipe off any oil split on the crankcase, tire or wheel.

7. Install:
   - Oil filler plug

FUEL LINE INSPECTION

1. Remove:
   - Tail cover
   Refer to "TAIL COVER" section.

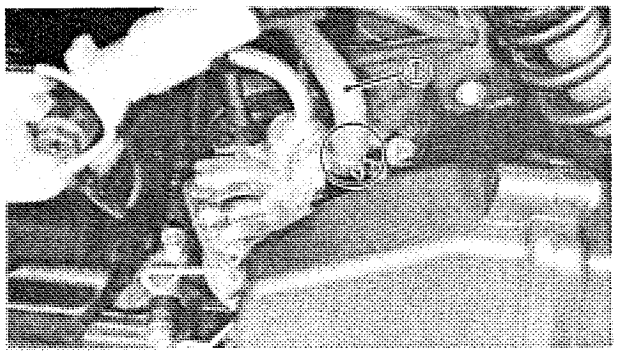

2. Inspect:
   - Fuel pipe ①
     Cracks/Damage→Replace.

3. Install:
   - Tail cover
     Refer to "TAIL COVER" section.

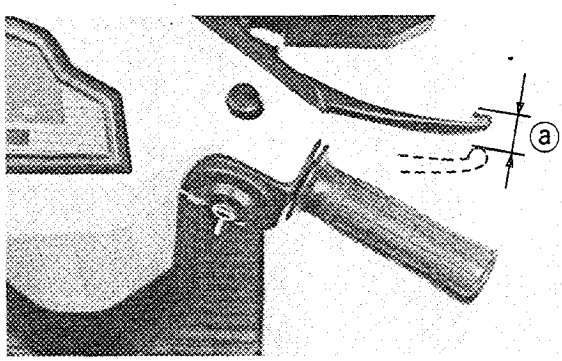

CHASSIS

FRONT BRAKE LEVER FREE PLAY CHECK

1. Check:
   - Front brake lever free play ⓐ
     Out of specification→Adjust.

	10~20 mm (0.4~0.8 in)

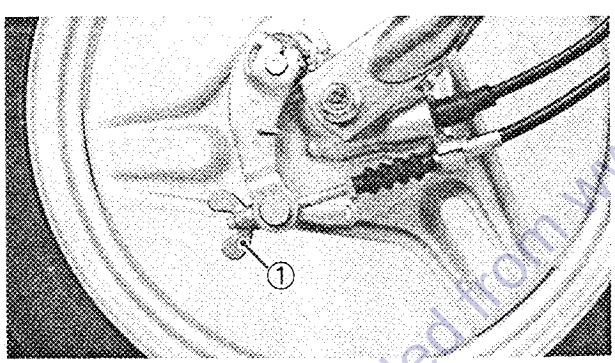

Front brake lever free play adjustment steps:
- Turn the adjuster ① in or out until the correct free play is obtained.

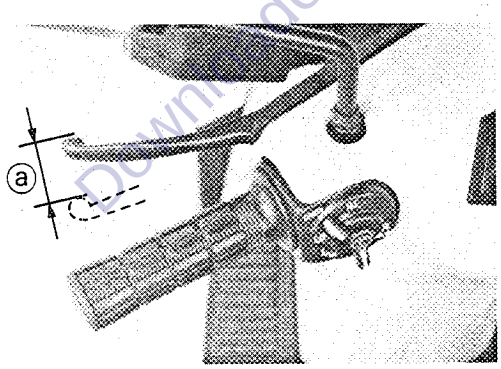

REAR BRAKE LEVER FREE PLAY CHECK

1. Check:
   - Rear brake lever free play ⓐ
     Out of specification→Adjust.

	10~20 mm (0.4~0.8 in)

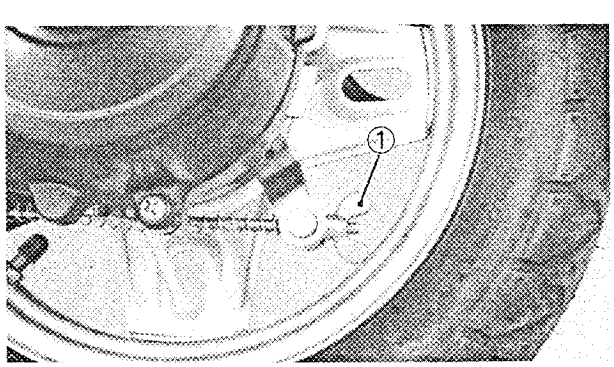

Rear brake lever free play adjustment steps;
- Turn the adjuster ① in or out until the correct free play is obtained.

FRONT AND REAR BRAKE LINING INSPECTION/ TIRE AND WHEEL INSPECTION

A

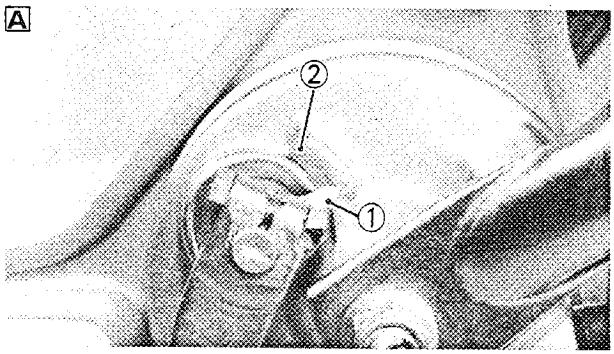

B

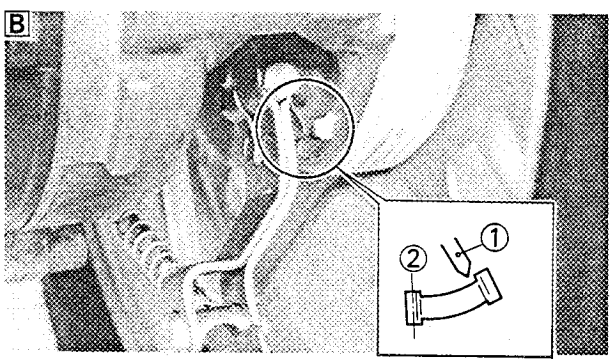

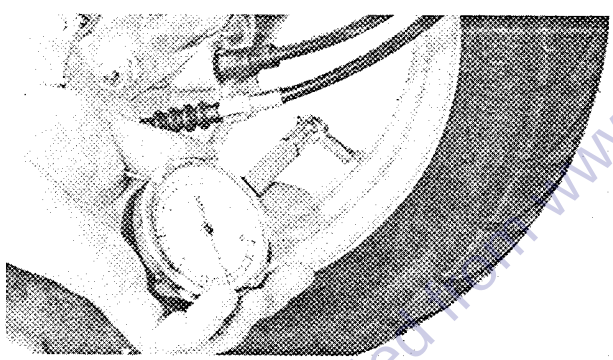

FRONT AND REAR BRAKE LINING

1. Activate the brake lever.

2. Inspect:
   - Wear indicator ①
     Indicator at wear limit line ② → Replace brake shoes.

A Front
B Rear

TIRE AND WHEEL INSPECTION

1. Measure:
   - Air pressure
     Out of specification → Adjust.

	Cold tire pressure
Front	125 kPa (1.25 kg/cm^2, 18 psi)
Rear	225 kPa (2.25 kg/cm^2, 32 psi)

WARNING:

Proper loading of your scooter is important for the handling, braking, and other performance and safety characteristics of your scooter. Do not carry loosely packed items that can shift. Securely pack your heaviest items close to the center of the scooter, and destribute the weight evenly from side to side. And check the condition and pressure of your tires. NEVER OVERLOAD YOUR SCOOTER. Make sure the total weight to the cargo, rider, passenger, and accessories (fairing, saddlebags, etc. if approved for this model) does not exceed the maximum load of the scooter. Operation of an overloaded scooter could cause tire damage, an accident, or even injury.

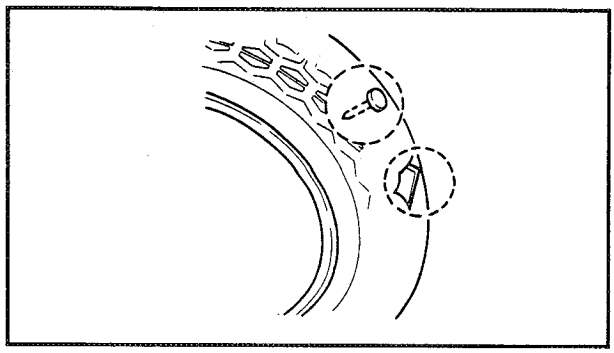

2. Inspect:
   - Tire surface
     Wear/Damage/Cracks/Road hazards→Replace.
   - Aluminum wheels
     Damage/Bends→Replace.
     Never attempt even small repairs to the wheel.

WARNING:

Ride conservatively after installing a tire to allow it to seat itself properly on the rim.

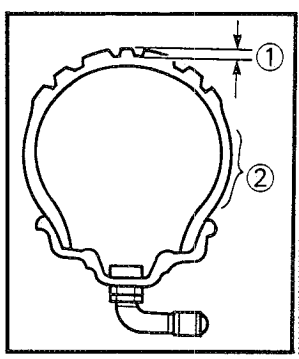

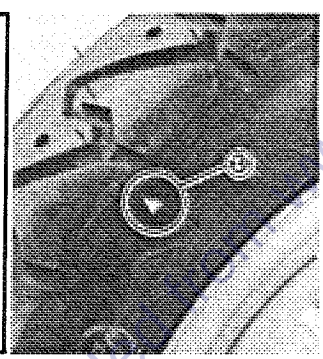

3. Measure:
   - Tire tread depth
     Out of specification→Replace.

Minimum Tire Tread Depth:
(front and rear)
0.8 mm (0.03 in)

① Tread depth
② Side wall
③ Wear indicator

STEERING ADJUSTMENT

1. Place the scooter on its centerstand, then elevate the front wheel.

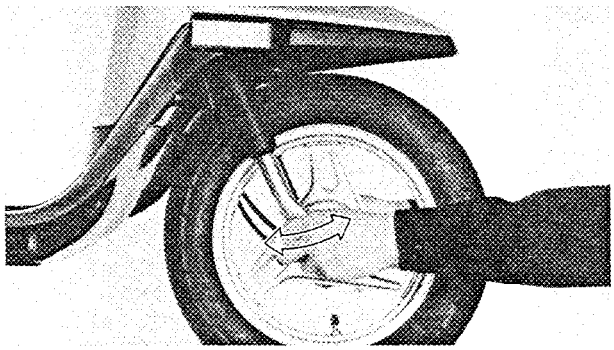

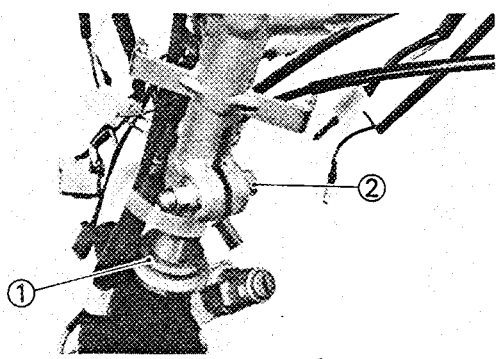

2. Check:
   - Steering assembly bearings
     Grasp the bottom of the forks and gently rock the rock assembly back and forth.
     Looseness→Adjust.

Steering head adjustment steps:
- Remove the front fender and front panel. Refer to "FRONT FENDER, FRONT PANEL AND FOOTREST BOARD" section.
- Tighten the ring nut ① to specification using the Ring Nut Wrench (YU-33975).

Ring Nut ①:
30 Nm (3.0 m•kg, 22 ft•lb)

NOTE:
Set the torque wrench to the ring nut wrench so that they form right angle.

- Move the handlebar up and down, and/or back and forth. If handlebar free play is excess, tighten the bolt ② to specification.

Bolt ②:
60 Nm (6.0 m•kg, 43 ft•lb)

- Install the front fender and front panel.

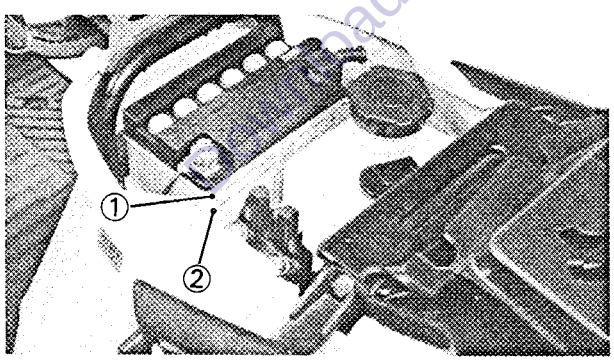

ELECTRICAL

BATTERY

1. Check:
   - Fluid level
     Incorrect→Refill.
     Fluid level should be between upper and lower level marks.

① Upper level
② Lower level

CAUTION:
Refill with distilled water only; tap water contains minerals harmful to a battery.

2. Inspect:
   - Breather hose
     Obstruction→Remove.
     Damage→Replace.

3. Inspect:
   - Battery

Replace the battery if:
- Battery voltage will not rise to a specific value or bubbles fail to rise even after many hours of charging.
- Sulfation of one or more cells occurs, as indicated by the plates turning white, or an accumulation of material exists in the bottom of the cell.
- Specific gravity readings after a long, slow charge indicate one cell to be lower than the rest.
- Warpage or buckling of plates or insulators is evident.

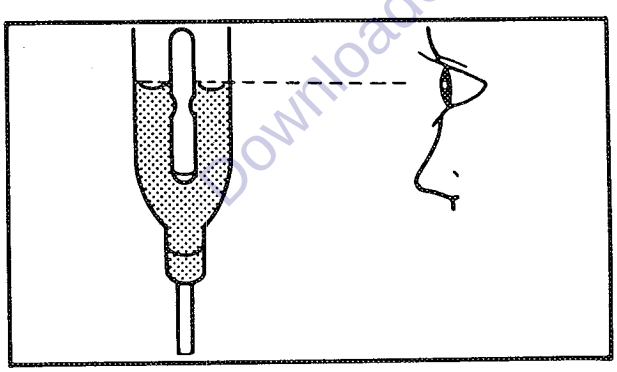

4. Measure:
   - Specific gravity:
     Less than 1.280→Recharge battery.

Charging Current:
0.4 amps/10 hrs
Specific Gravity:
1.280 at 20°C (68°F)

BATTERY/FUSE INSPECTION

CAUTION:

Always charge a new battery before using it to ensure maximum performance.

WARNING:

Battery electrolyte is dangerous; it contains sulfuric acid and therefore is poisonous and highly caustic.

Always follow these preventive measures:

- Avoid bodily contact with electrolyte as it can cause servere burns or permanent eye injury.
- Wear protective eye gear when handling or working near batteries.

Antidote (EXTERNAL):

- SKIN—Flush with water.
- EYES—Flush with water for 15 minutes and get immediate medical attention.

Antidote (INTERNAL):

- Drink large quantities of water or milk follow with milk of magnesia) beaten egg, or vegetable oil. Get immediate medical attention.

Batteries also generate explosive hydrogen gas, therefore you should always follow these preventive measures:

- Charge batteries in a well-ventilated area.
- Keep batteries away from fire, sparks, or open flames (e.g., welding equipment, lighted cigarettes, etc.)
- DO NOT SMOKE when charging or handling batteries.

KEEP BATTERIES AND ELECTROLYTE OUT OF REACH OF CHILDREN.

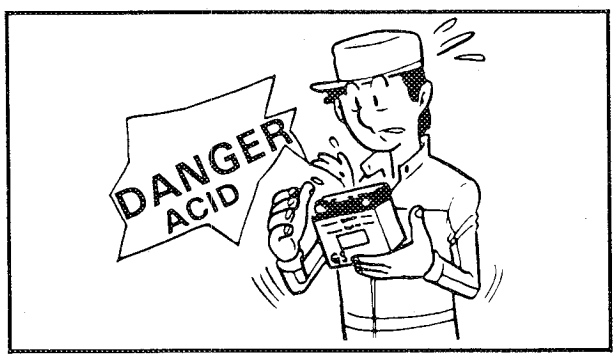

FUSE INSPECTION

1. Open the seat lock.

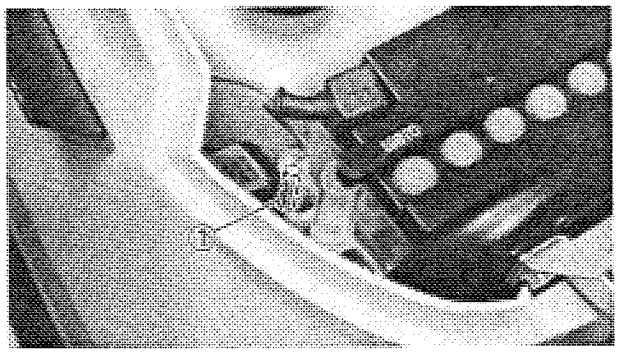

2. Inspect:
   - Fuse ①
     Defective→Replace.

Blown fuse procedure steps:
- Turn off ignition and the circuit.
- Install a new fuse of proper amperage.
- Turn on switches to verify operation of electrical device.
- If fuse blows immediately again, check circuit in question.

WARNING:

Do not use fuses of higher amperage rating than recommended. Extensive electrical system damage and fire could result from substitution of a fuse of improper amperage:

Description	Amperage	Quantity
Main	7A	1

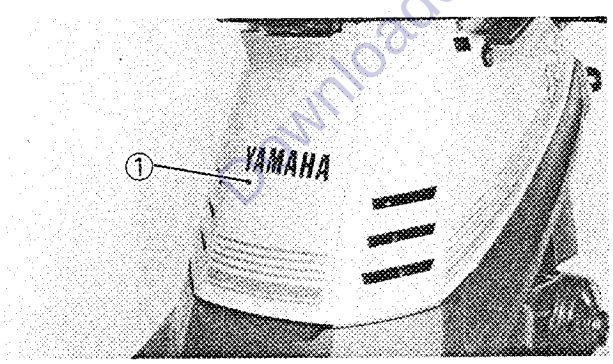

SPARK PLUG INSPECTION

1. Remove:
   - Cover ①
   - Spark plug

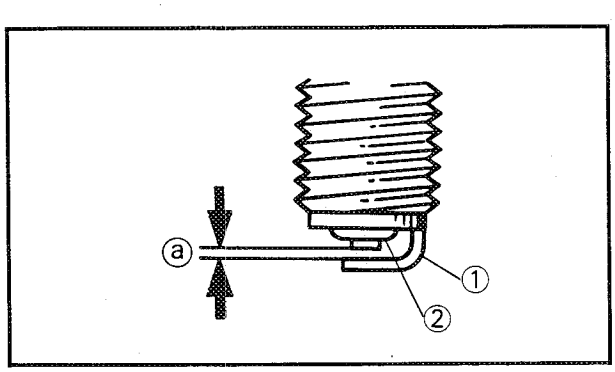

2. Inspect:
   - Electrode ①
     Wear/Damage→Replace.
   - Insulator ②
     Abnormal Color→Replace.

Standard Spark Plug:
BPR6HS (N.G.K.)

3. Measure:
   - Plug gap ⓐ
     Out of specification→Regap.
     Use a Wire Gauge or Feeler Gauge.

	Spark Plug Gap ⓐ: **0.9~1.0 mm (0.035~0.039 in)**

4. Clean the plug with a spark plug cleaner if necessary.
5. Tighten:
   Before installing a spark plug, clean the gasket and plug surfaces.

NOTE:

Finger-tighten the spark plug before torquing to specification.

	Spark Plug: **20 Nm (2.0 m•kg, 14 ft•lb)**

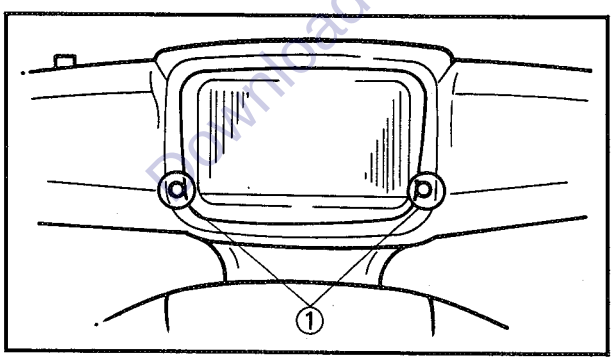

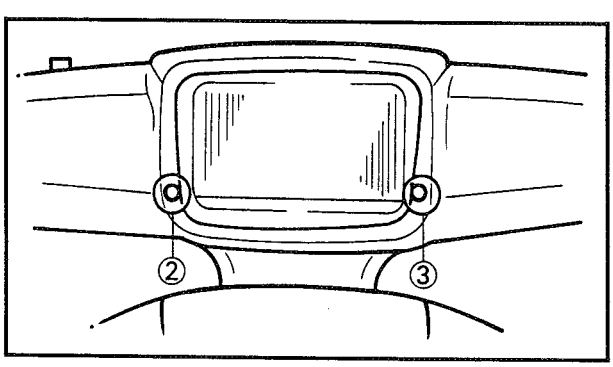

HEADLIGHT BEAM ADJUSTMENT

1. Adjust:
   - Headlight (Vertically)

	Vertical adjustment
Higher	**Loosen the adjusters ①**
Lower	**Tighten the adjusters ①**

   - Headlight (Horizontal)

	Horizontal adjustment
Right	**Loosen the adjuster ② or tighten the adjuster ③**
Left	**Loosen the adjuster ③ or tighten the adjuster ②**

IGNITION TIMING

Adjustment free.

CHAPTER 3
ENGINE OVERHAUL

ENGINE OVERHAUL

ENGINE REMOVAL

NOTE:

It is necessary to remove the engine in order to remove the following components.

- Cylinder head
- Cylinder
- Piston
- CDI magneto
- Starter motor
- Primary and secondary sheave

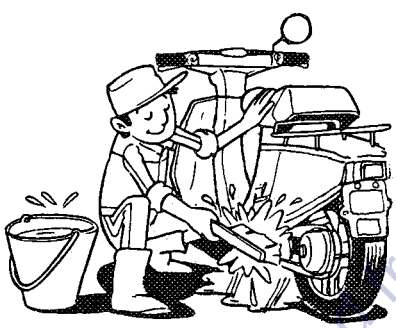

PREPARATION FOR REMOVAL

1. Remove all dirt, mud, dust and foreign material before removal and disassembly.

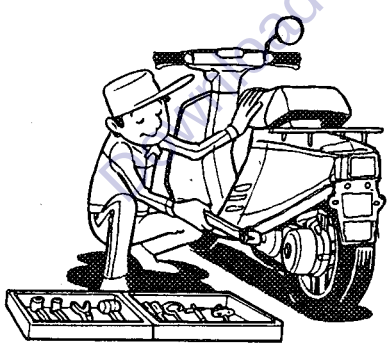

2. Use proper tools and cleaning equipment. Refer to "CHAPTER 1. GENERAL INFORMATION—SPECIAL TOOLS" section.

NOTE:

When disassembling the engine, keep mated parts together. This includes gears, cylinder, piston and other parts that have been " mated" through normal wear. Mated parts must be reused as an assembly or replaced.

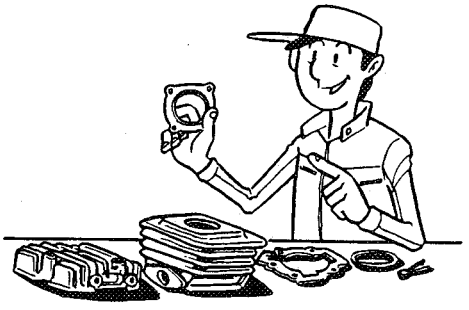

3. During engine disassembly, clean all parts and place them in trays in the order of disassembly. This will speed up assembly time and help assure that all parts are correctly reinstalled in the engine.

4. Drain the transmission oil completely.
   Refer to "CHAPTER 2.—TRANSMISSION OIL REPLACEMENT" section.

TAIL COVER

1. Remove:
   - Seat
   - Tail cover
   - Rear carrier

   Refer to "CHAPTER 2.—TAIL COVER" section.

FRONT FENDER, FRONT PANEL AND FOOTREST BOARD

1. Remove:
   - Front fender
   - Front panel
   - Footrest board

   Refer to "CHAPTER 2.—FRONT FENDER, FRONT PANEL AND FOOTREST BOARD" section.

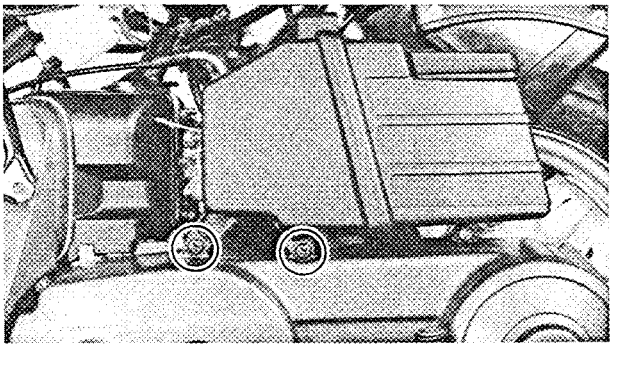

CARBURETOR

1. Remove:
   - Air cleaner case

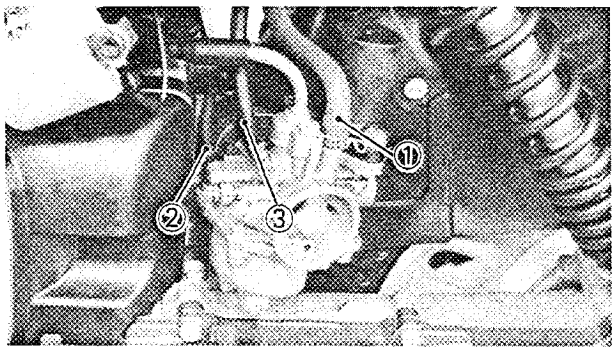

2. Remove:
   - Fuel pipe ①
   - Oil delivery pipe ②
   - Vacuum pipe ③
   - Auto choke unit lead

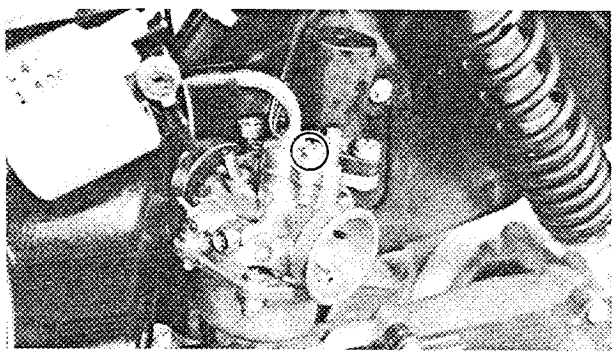

3. Remove:
   - Carburetor top cover
   - Carburetor

NOTE:

Cover the carburetor with a clean rag to prevent dirt or foreign matter into the carburetor.

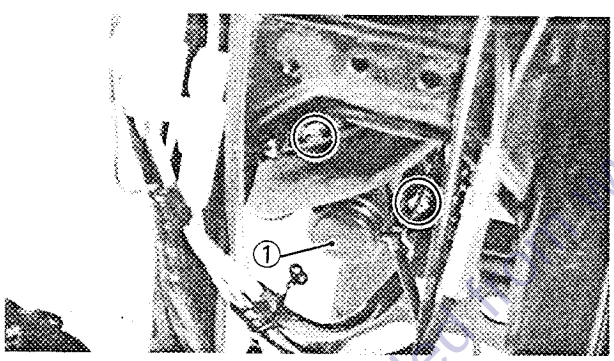

CABLES, LEADS AND PIPES

1. Remove:
   - Autolube pump cover ①

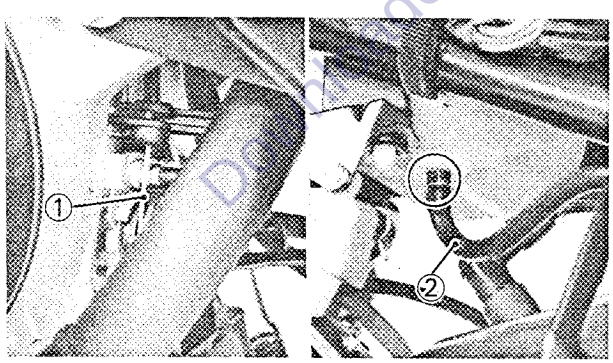

2. Remove:
   - Oil pump cable ①
   - Oil pipe ②

NOTE:

Plug the oil pipe so the oil will not run out of the oil tank.

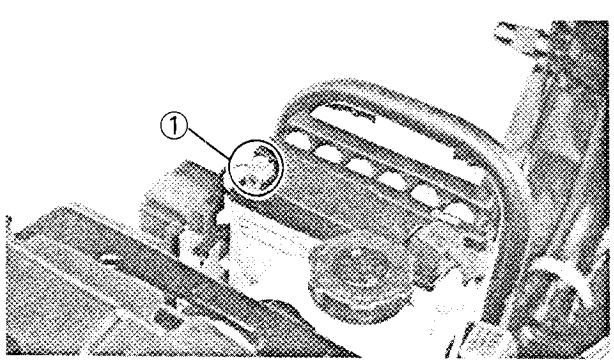

3. Remove:
   - Battery negative lead ①

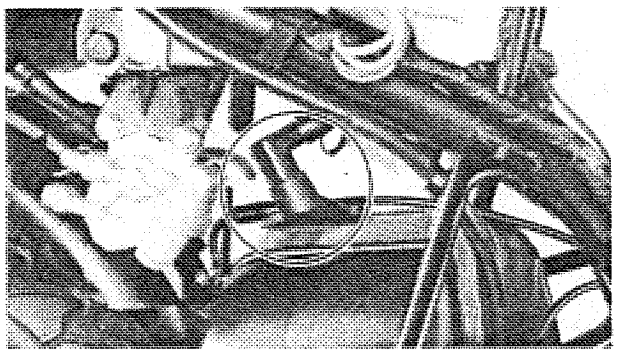

4. Remove:
   - Spark plug cap

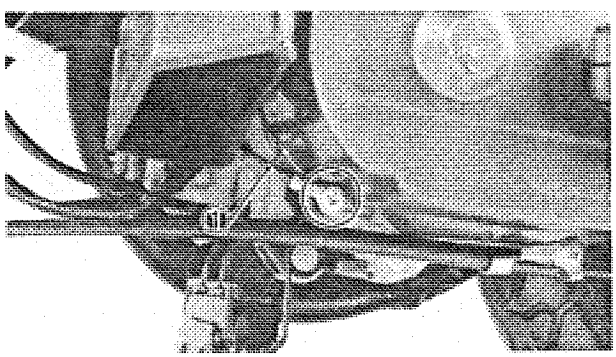

5. Remove:
   - Earth lead ①

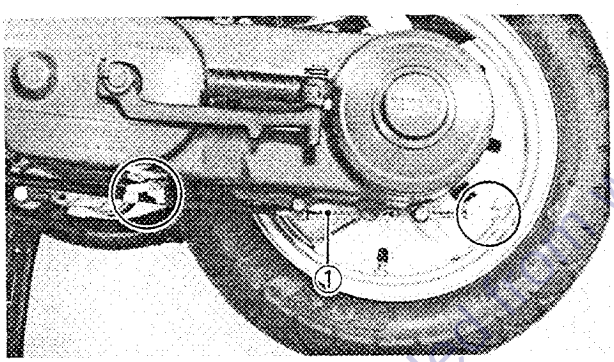

6. Remove:
   - Rear brake cable ①

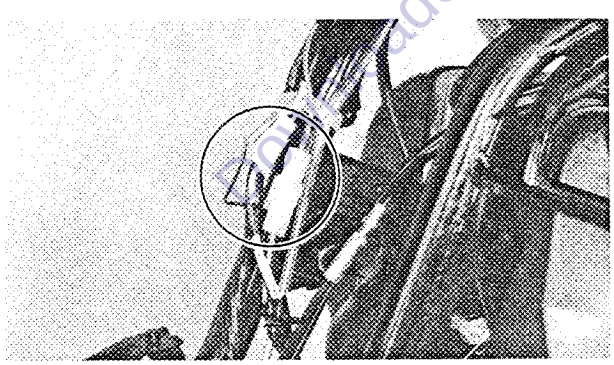

7. Disconnect:
   - C.D.I. magneto leads
   - Starter motor leads

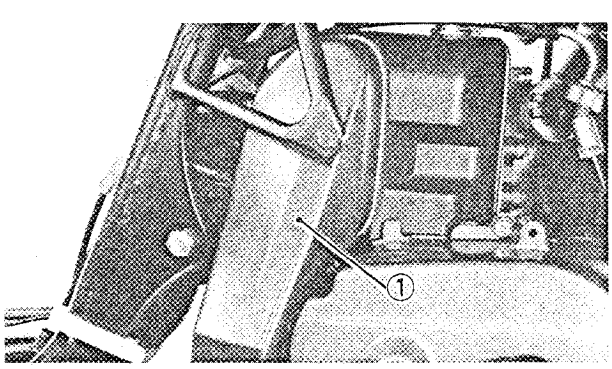

ENGINE REMOVAL

1. Remove:
   - Air shroud ①

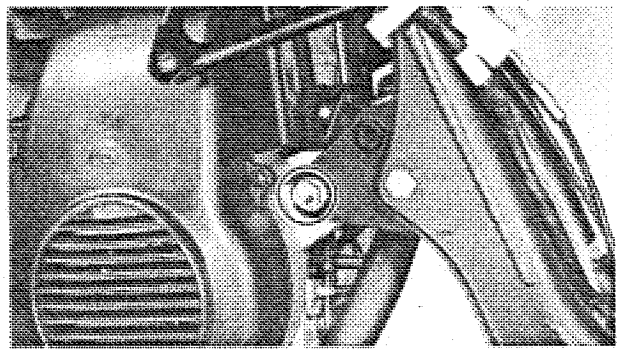

2. Remove:
   - Engine mounting bolts

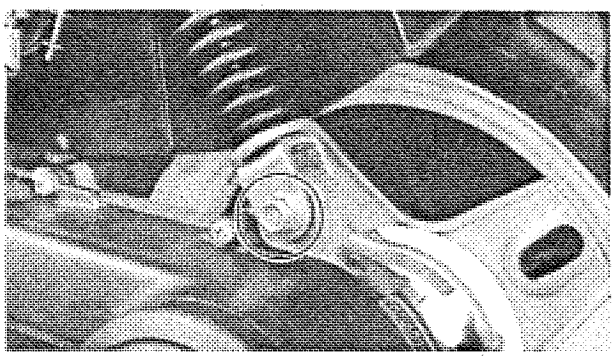

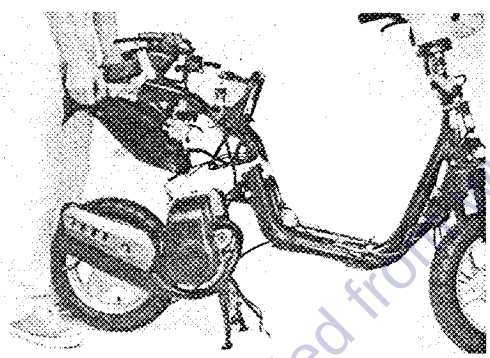

3. Remove:
   - Engine

   Lift up the frame and remove the engine.

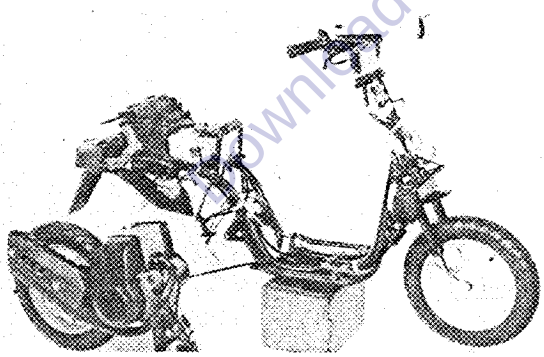

4. Place the frame on a suitable stand.

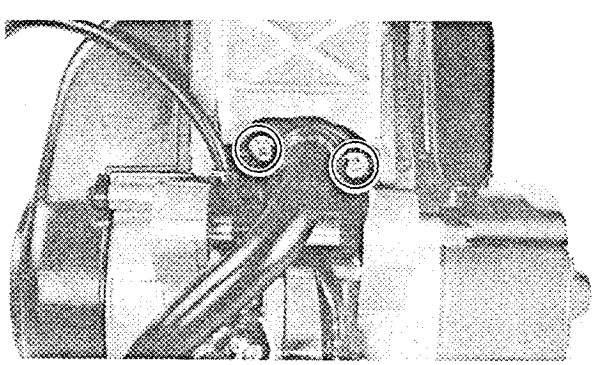

DISASSEMBLY

MUFFLER

1. Remove:
   - Exhaust pipe

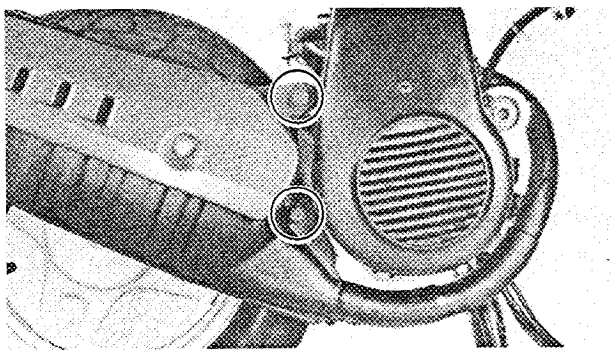

2. Remove:
   - Muffler

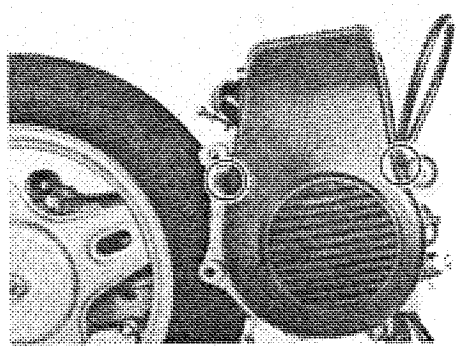

CYLINDER HEAD

1. Remove:
   - Fan cover

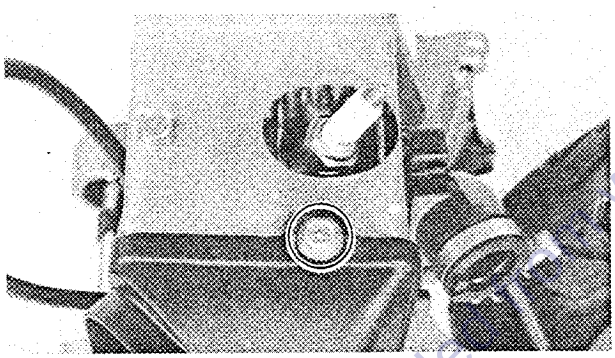

2. Remove:
   - Air shroud

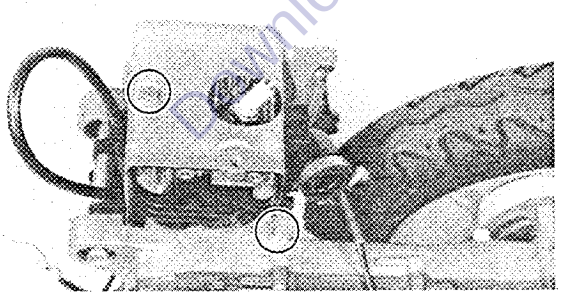

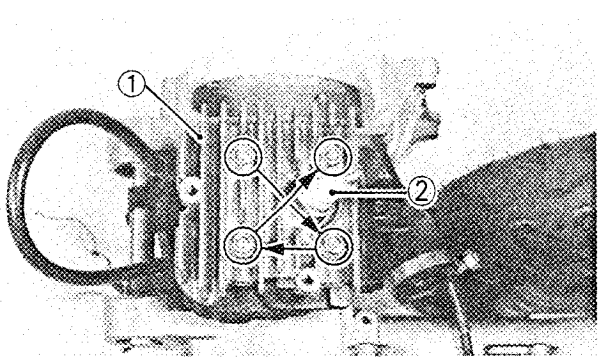

3. Remove:
   - Cylinder head ①
   - Cylinder head gasket

NOTE:

- Before loosening the cylinder head, loosen the spark plug ②.
- The cylinder head holding nuts should be loosened 1/2 turn each time, and remove.

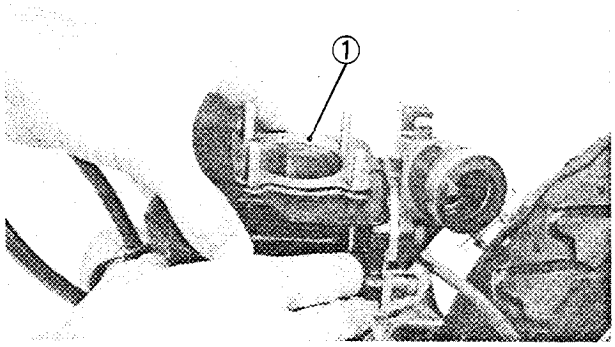

CYLINDER

1. Remove:
   - Cylinder ①
   - Cylinder gasket

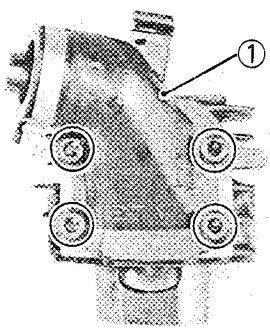

2. Remove:
   - Carburetor joint ①
   - Reed valve assembly

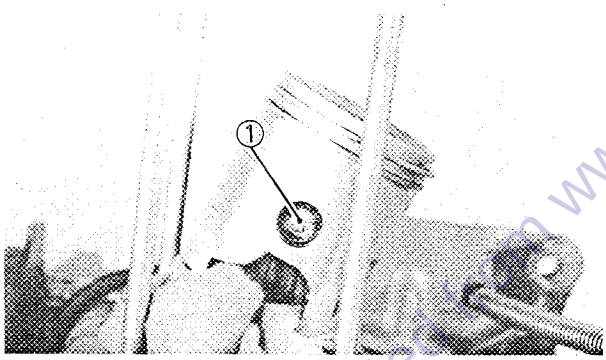

PISTON PIN AND PISTON

1. Remove:
   - Piston pin clip ①

NOTE:

Before removing the piston pin clip, cover the crankcase with a clean rag so you will not accidentally drop the clip into the crankcase.

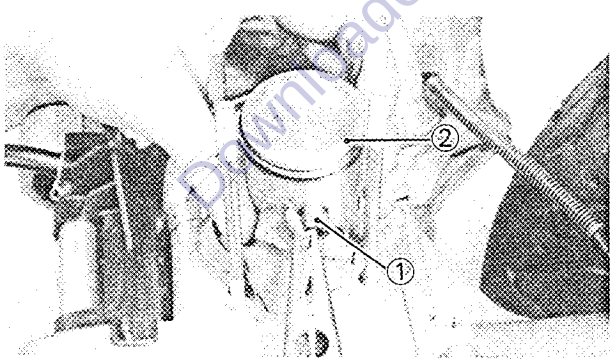

2. Remove:
   - Piston pin ①
   - Piston ②
   - Piston pin bearing

NOTE:

Before removing the piston pin, deburr the clip groove and pin hole area. If the piston pin groove is deburred and piston pin is still difficult to remove, use Piston Pin Puller (YU-01304).

CAUTION:

Do not use a hammer to drive the piston pin out.

PRIMARY AND SECONDARY SHEAVE

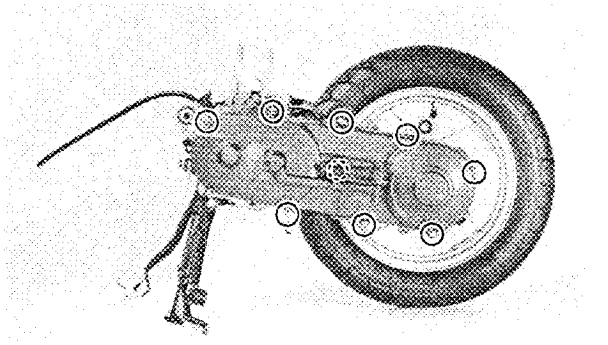

1. Remove:
   - Crankcase cover (Left)
   - Dowel pins

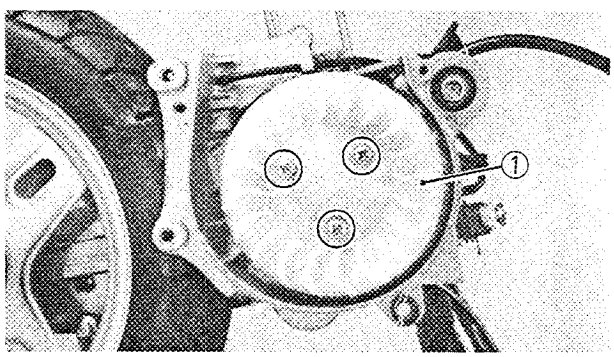

2. Remove:
   - Fan ①

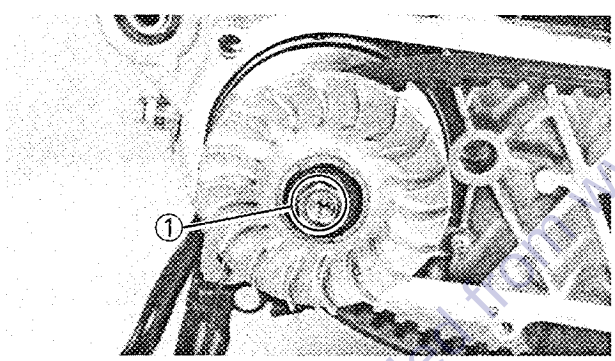

3. Remove:
   - Nut ① (Primary sheave)

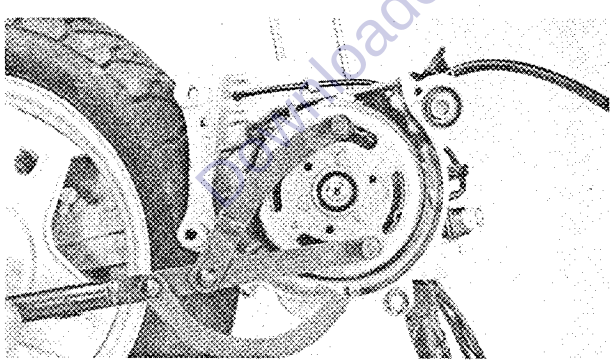

NOTE:

When loosening the nut (primary sheave), hold the C.D.I. magneto using Flywheel Holding Tool (YU-01235).

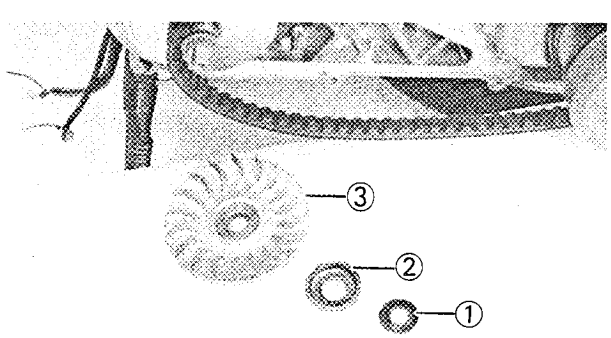

4. Remove:
   - Conical spring washer ①
   - One-way clutch ②
   - Primary fixed sheave ③
   - V-Belt

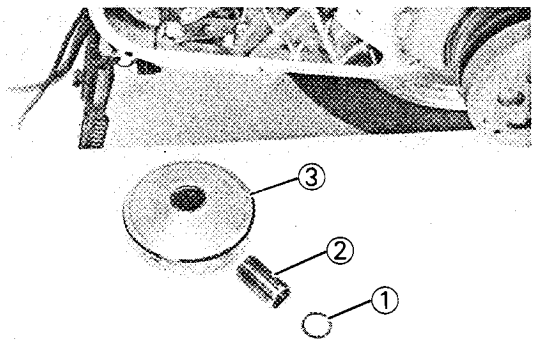

5. Remove:
   - Shim ①
   - Collar ②
   - Primary sheave assembly ③

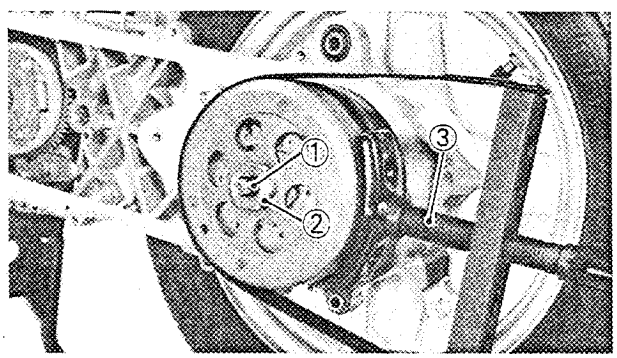

6. Remove:
   - O-ring ①
   - Nut ② (Secondary sheave)

NOTE:

Hold the secondary sheave using Sheave Holder (YS-01880) ③.

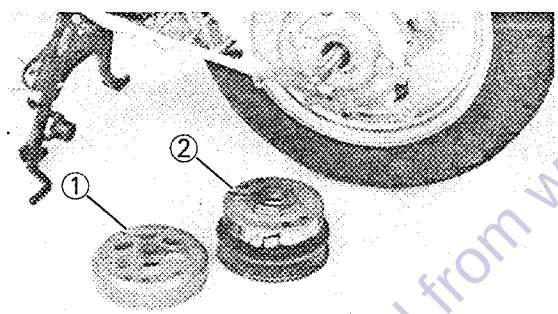

7. Remove:
   - Clutch housing ①
   - Secondary sheave assembly ②

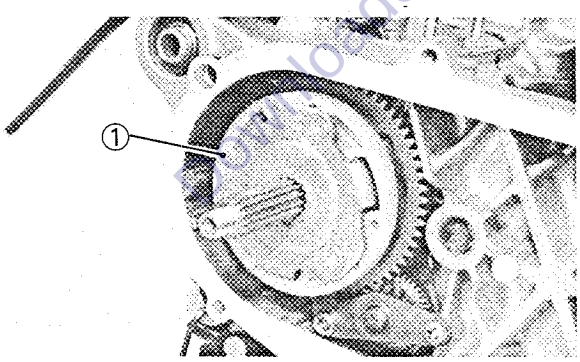

STARTER SYSTEM

1. Remove:
   - Starter clutch assembly ①

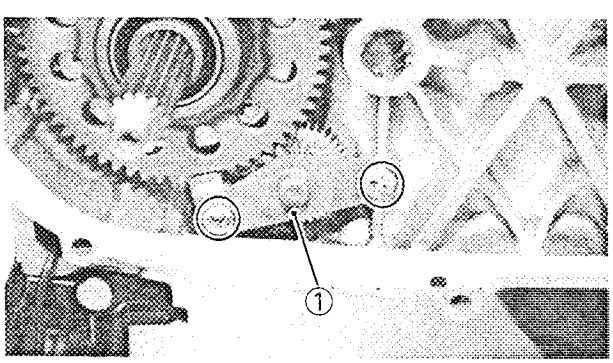

2. Remove:
   - Plate ① (Idle gear)

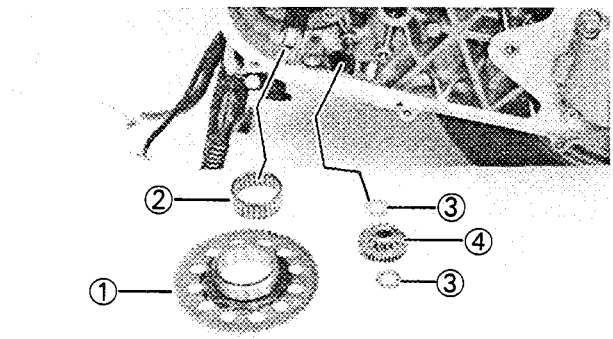

3. Remove:
   - Starter wheel gear ①
   - Bearing ②
   - Washers ③
   - Idle gear ④

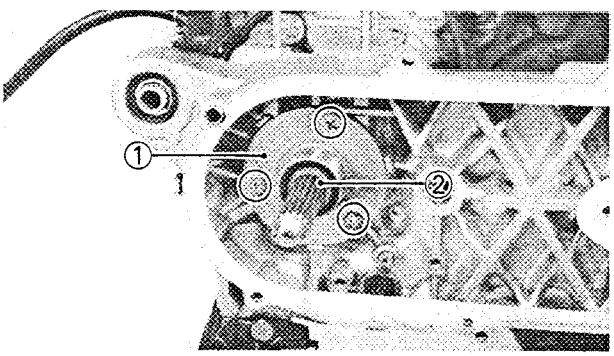

4. Remove:
   - Stay ①
   - Collar ②

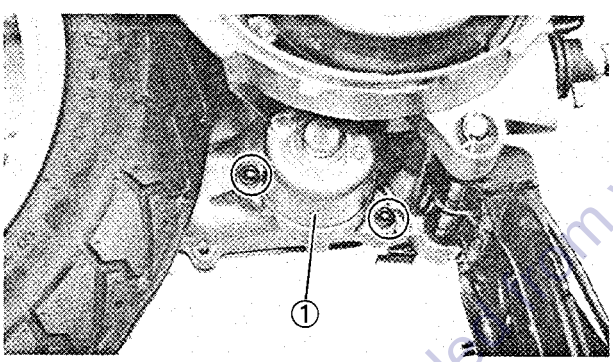

5. Remove:
   - Starter motor ①

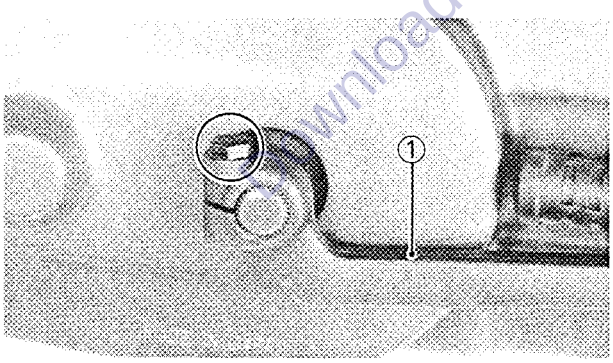

6. Remove:
   - Kick crank ①

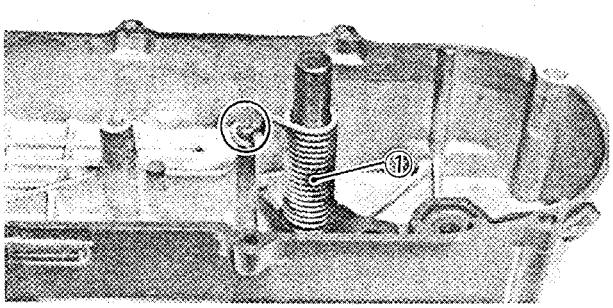

7. Remove:
   - Kick torsion spring ①

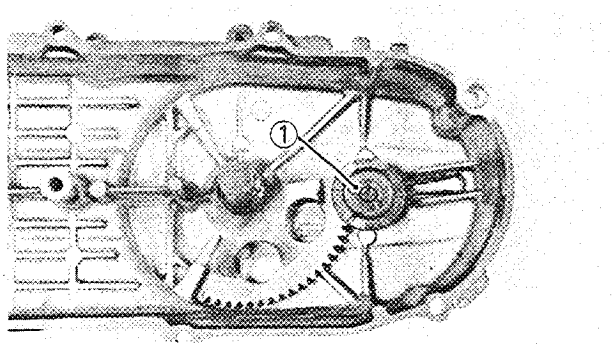

8. Remove:
   - Kick pinion gear ①

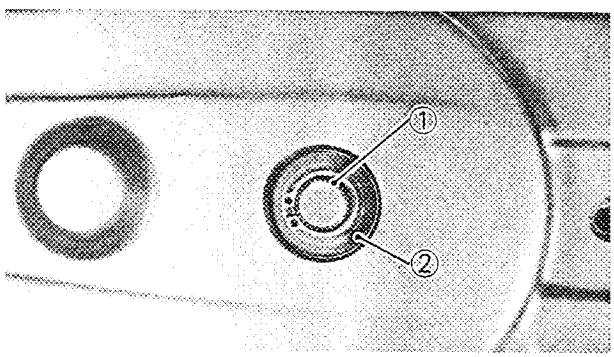

9. Remove:
   - Circlip ①
   - Plain washer ②

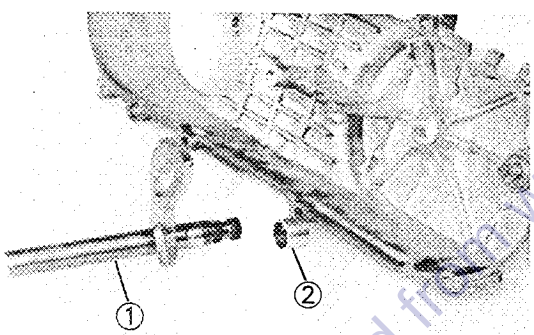

10. Remove:
    - Kick shaft ①
    - Collar ②

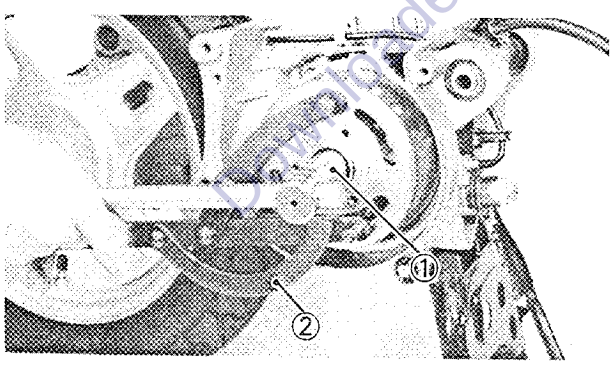

C.D.I. MAGNETO

1. Remove:
   - Nut ① (C.D.I. magneto)
     Use Flywheel Holding Tool (YU-01235) ②.

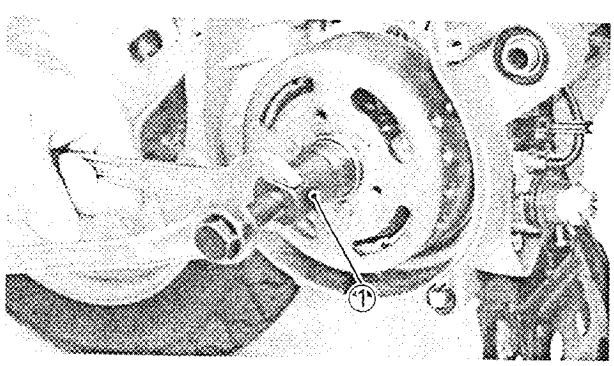

2. Remove:
   - C.D.I. magneto
     Use Flywheel Magneto Puller (YM-01189) ①.
   - Woodruff key

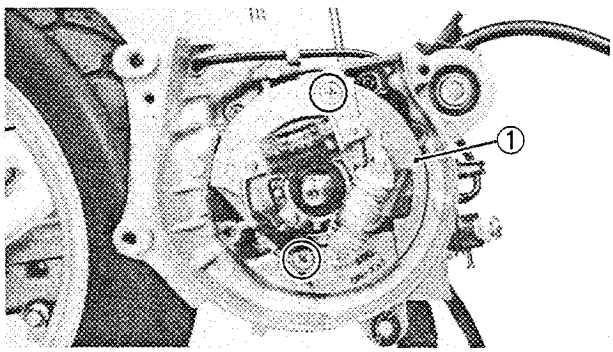

3. Remove:
   - Stator assembly ①

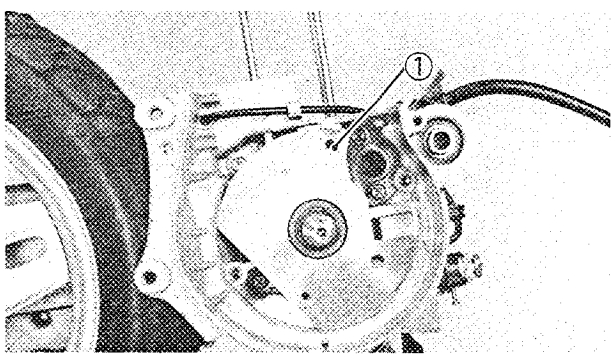

4. Remove:
   - Gasket ①

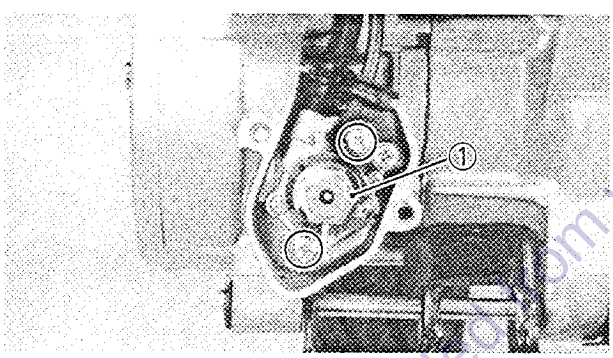

AUTOLUBE PUMP

1. Remove:
   - Autolube pump ①

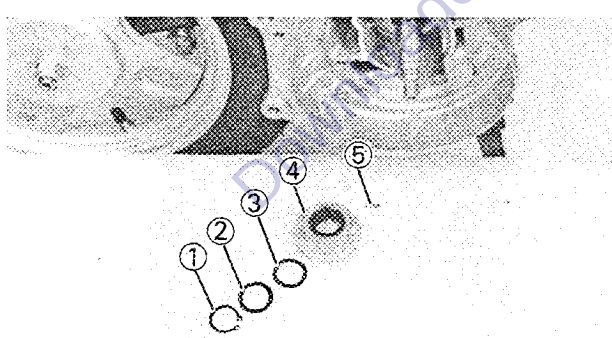

2. Remove:
   - Circlip ①
   - Shim ②
   - Wave washer ③
   - Pump drive gear ④
   - Pin ⑤

TRANSMISSION

1. Remove:
   - Rear wheel
   - Brake shoe plate

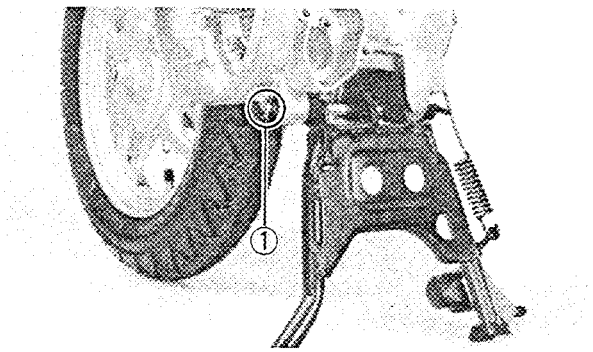

2. Unhook:
   - Spring (Centerstand)

3. Remove:
   - Clip ①
   - Centerstand

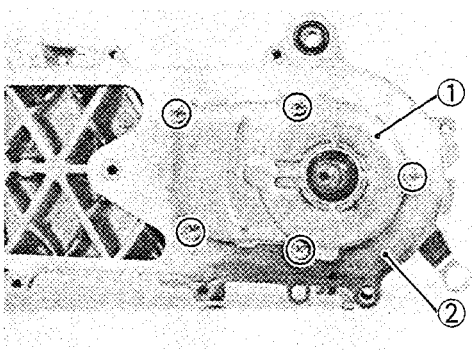

4. Remove:
   - Transmission case cover ①
   - Gasket ②

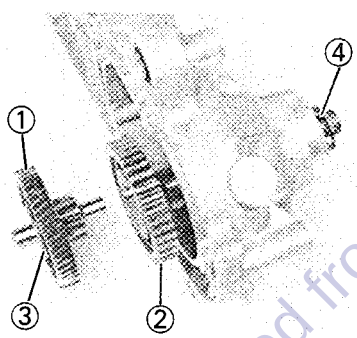

5. Remove:
   - Main axle ①
   - Drive axle ②
   - Washer ③ (Main axle)
   - Washer ④ (Drive axle)

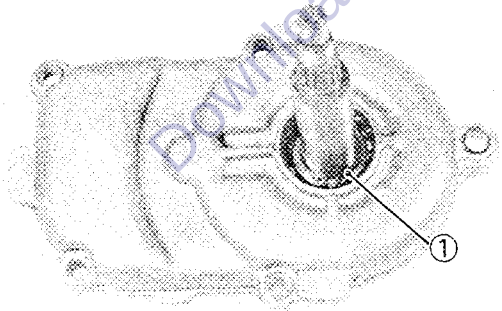

6. Remove:
   - Oil seal
   - Circlip ①

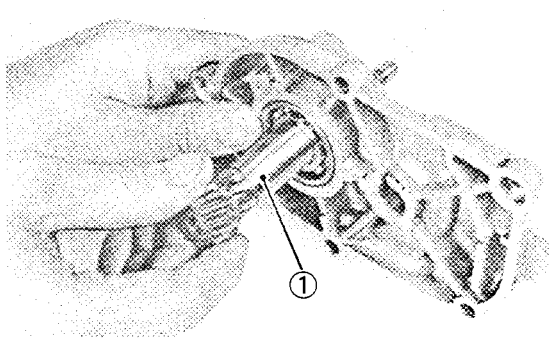

7. Remove:
   - Secondary sheave axle ①

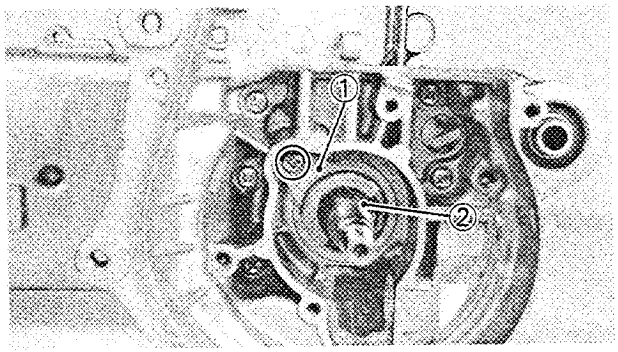

CRANKCASE AND CRANKSHAFT

1. Remove:
   - Oil seal stopper ①
   - Circlip ②

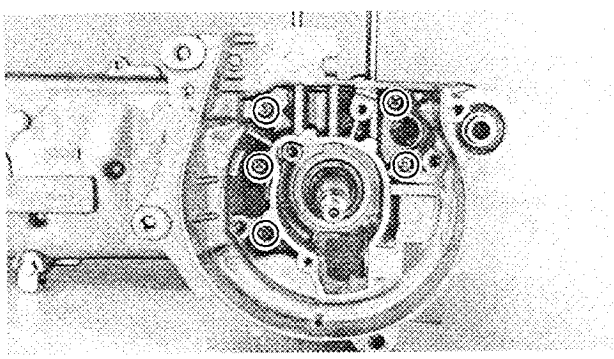

2. Remove:
   - Screws (Crankcase)

NOTE:

Loosen each screw 1/4 turn, and remove them after all are loosened.

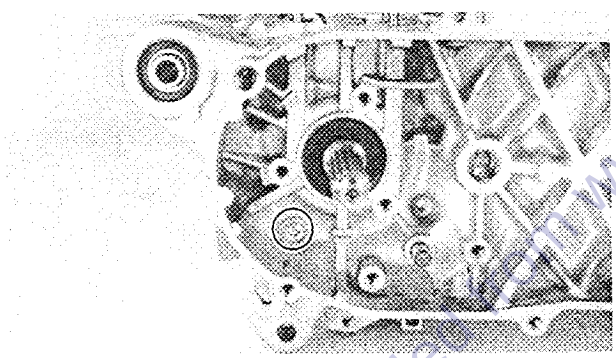

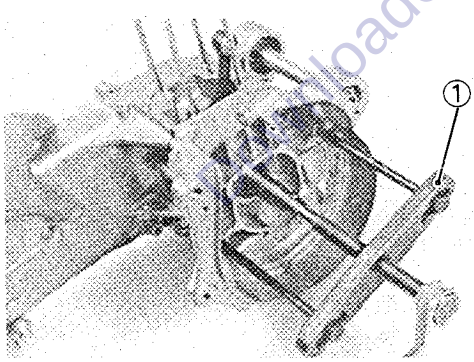

3. Attach:
   - Crankcase Separating Tool (YU-01135) ①

NOTE:

Fully tighten the tool holding bolts, but make sure the tool body is parallel with the case. If necessary, one screw may be backed out slightly to level tool body.

4. Remove:
   - Crankcase (Left)

   As pressure is applied, alternately tap on the engine mounting bosses.

CAUTION:

Use soft hammer to tap on the case half. Tap only on reinforced portions of case. Do not tap on gasket mating surface. Work slowly and carefully. Make sure the case halves separate evenly. If one end "hangs up", take

pressure off the push screw, realign, and start over. If the cases do not separate, check for a remaining case screw or fitting. Do not force.

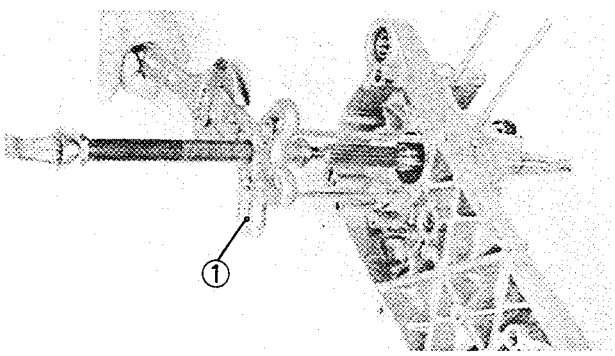

5. Remove:
   - Crankshaft
     Use Universal Puller Set (YU-33270) ①.

NOTE:

Use the following bolts available on the market.
Lenght: 160 mm (6.3 in)
Thread: 6 mm (0.24 in)
Pitch: 1.25 mm

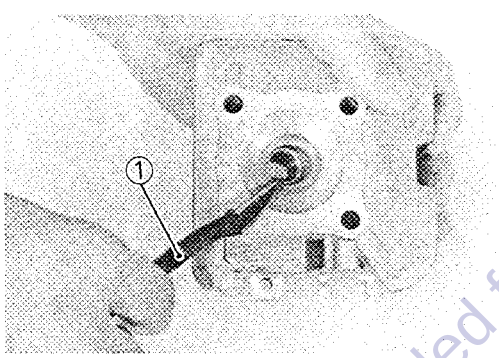

INSPECTION AND REPAIR

CYLINDER HEAD

1. Remove:
   - Carbon deposits
     Use a rounded scraper ①.

NOTE:

Take care to avoid damaging the spark plug threads. Do not use a sharp instrument. Avoid scratching the aluminum.

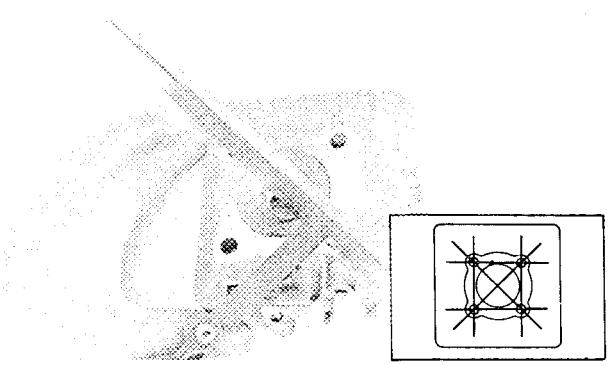

2. Inspect:
   - Cylinder head warpage
     Out of specification→Re-surface.

Warpage measurement and re-surfacement steps:
- Attach a straight edge and a thickness gauge on the cylinder head.
- Measure the warpage limit.

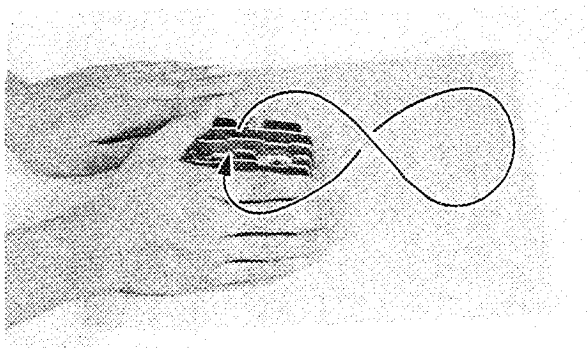

Warpage Limit:
0.02 mm (0.0008 in)

- If the warpage is out of specification, reface the cylinder head.
- Place a 400 ~ 600 grit wet sandpaper on the surface plate, and re-surface the head using a figure-eight sanding pattern.

NOTE:

Rotate the head several times to avoid removing too much material from one side.

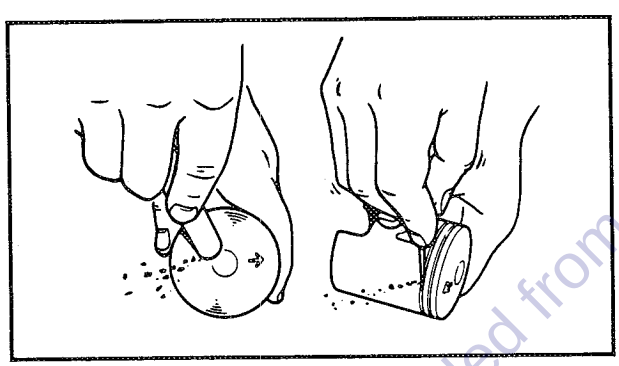

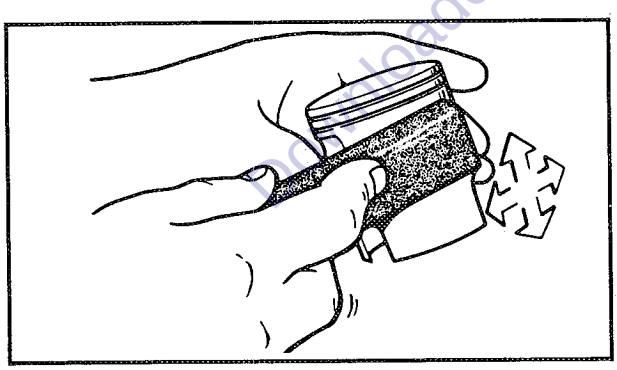

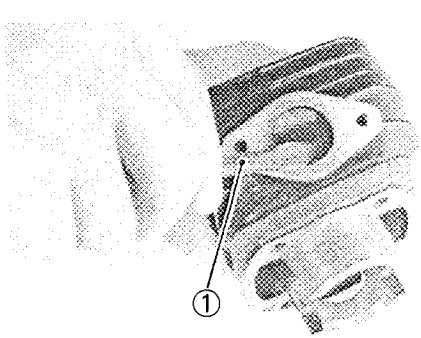

CYLINDER AND PISTON

1. Eliminate:
   - Carbon deposits
     From the piston crown and ring grooves.
2. Eliminate:
   - Score marks and lacquer deposits
     From the sides of piston.
     Use a 600 ~ 800 grit wet sandpaper.

NOTE:

Sand in a crisscross pattern. Do not sand excessively.

3. Inspect:
   - Piston wall
     Wear/Scratches/Damage → Replace.

4. Eliminate:
   - Carbon deposits
     Use a rounded scraper ①.

5. Inspect:
   - Cylinder wall
     Wear/Scratches→Rebore or replace.

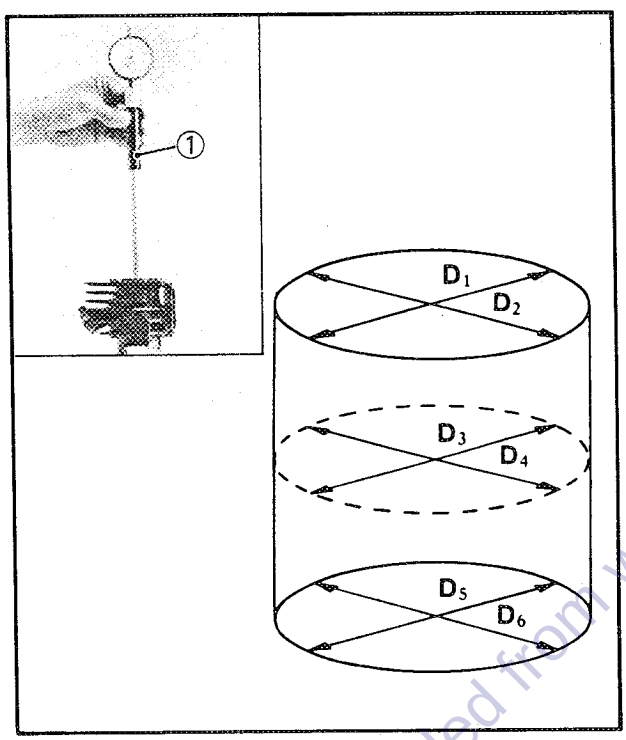

6. Measure:
   - Piston-to-cylinder clearance

Piston-to-cylinder clearance measurement steps:

First step:
- Measure the cylinder bore "C" with a Cylinder Bore Gauge.

NOTE:

Measure the cylinder bore "C" in parallel to and at right angles to the crankshaft. Then, find the average of the measurements.

	Standard	Wear Limit
Cylinder bore "C"	40.00~40.02 mm (1.575~1.583 in)	40.50 mm (1.594 in)
Taper "T"	–	0.05 mm (0.0019 in)
Out of round "R"	–	0.01 mm (0.0004 in)

C = Maximum D
T = (Maximum D_1 or D_2) – (Maximum D_5 or D_6)
R = (Maximum D_1, D_3 or D_5) – (Minimum D_2, D_4 or D_6)

- If out of specification, rebore or replace cylinder, and replace piston and piston rings as a set.

2nd step:
- Measure the piston skirt diameter "P" with a micrometer.

ⓐ 5.0 mm (0.2 in) from the piston bottom edge.

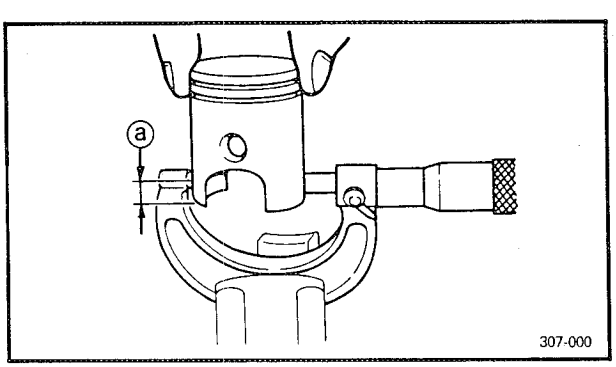

	Piston Size P
Standard	40.05 ~ 40.07 mm (1.577 ~ 1.578 in)
Oversize 1	40.25 mm (1.585 in)
Oversize 2	40.50 mm (1.594 in)

- If out of specification, replace piston and piston rings as a set.

3rd step:

- Calculate the piston-to-cylinder clearance with following formula:

Piston-to-cylinder Clearance =
Cylinder bore "C" –
Piston skirt diameter "P"

- If out of specification, rebore or replace cylinder, and replace piston and piston rings as a set.

Piston-to-cylinder Clearance:
0.034 ~ 0.047 mm
(0.0013 ~ 0.0018 in)
Limit: 0.1 mm (0.004 in)

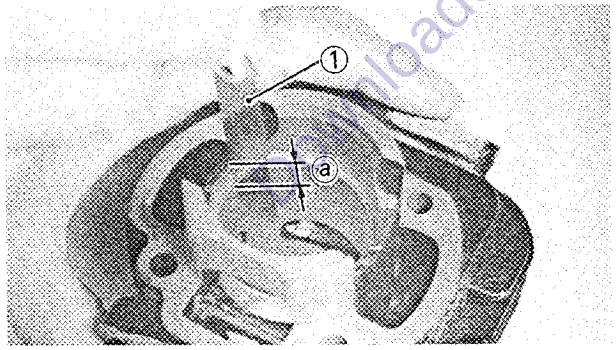

7. Measure:
   - End gap
     Out of specification → Replace rings as a set.
     Use a Feeler Gauge ①.

	Standard	Limit
Top ring	0.15 ~ 0.30 mm (0.006 ~ 0.012 in)	0.70 mm (0.028 in)
2nd ring	0.15 ~ 0.30 mm (0.006 ~ 0.012 in)	0.70 mm (0.028 in)

ⓐ Measuring Point 20 mm (0.8 in)

8. Oversize piston ring size:
   Ring size is stamped on top of the ring.

Oversize piston ring	
Oversize 1	25
Oversize 2	50

PISTON PIN AND PISTON PIN BEARING

1. Apply:
   - 2 cycle oil
   To the piston pin and bearing.
2. Install:
   - Piston pin
   - Piston pin bearing
   Into the small end of the connecting rod.

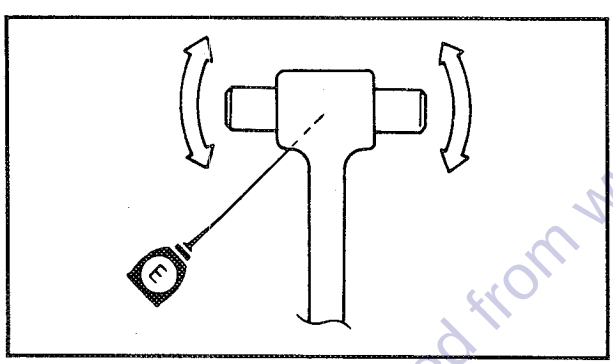

3. Check:
   - Free play
   There should be no noticeable for the play.
   Free play exists→Inspect the connecting rod for wear/Replace the pin and/or connecting rod as required.

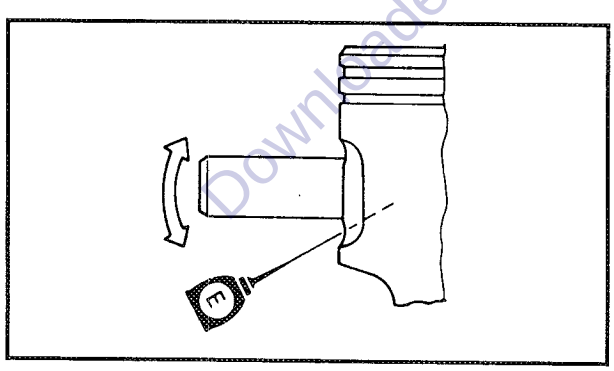

4. Install:
   - Piston pin
   Into the piston pin hole.
5. Check:
   - Free play (when the piston pin is in place in the piston)
   There should be no noticeable for the play.
   Free play exists→Replace piston pin and/or piston.
6. Inspect:
   - Piston pin and bearing
   Signs of heat discoloration→Replace.

AUTOLUBE PUMP

Wear or an internal malfunction may cause pump output to vary from the factory setting. This situation is, however, extremely rare. If improper output is suspected, inspect the following:

1. Inspect:
   - Delivery line
     Obstructions→Blow out.
   - O-ring
     Wear/Damage→Replace.
2. Inspect:
   - Autolube pump drive gear teeth ①
   - Autolube pump driven gear teeth ②
     Pitting/Wear/Damage→Replace.

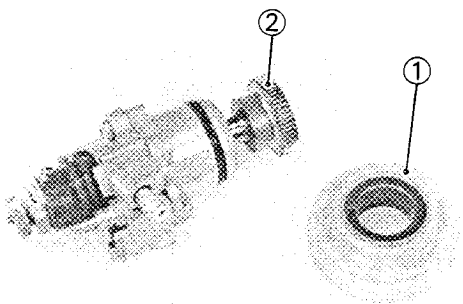

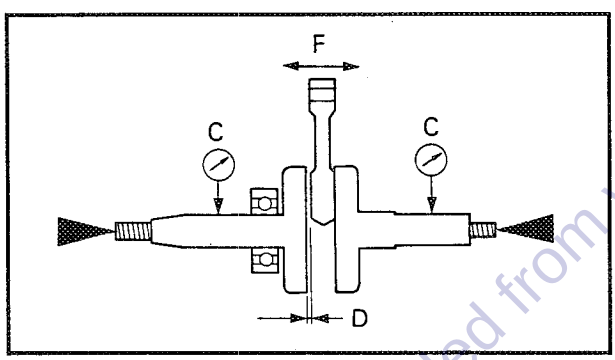

CRANKSHAFT

1. Measure:
   - Runout limit "C"
   - Connecting rod big end side clearance "D"
   - Small end free play limit "F"
     Out of specification→Replace.
     Use V-Blocks, Dial Gauge and thickness gauge.

Runout Limit "C":
0.03 mm (0.0012 in)
Connecting Rod Big End Side Clearance "D":
0.2～0.5 mm (0.008～0.02 in)
Small End Free Play:
0.4～0.8 mm (0.015～0.031 in)

2. Inspect:
   - Bearings (Crankshaft)
     Spin the bearing inner race.
     Excessive play/Roughness→Replace.
     Pitting/Damage→Replace.

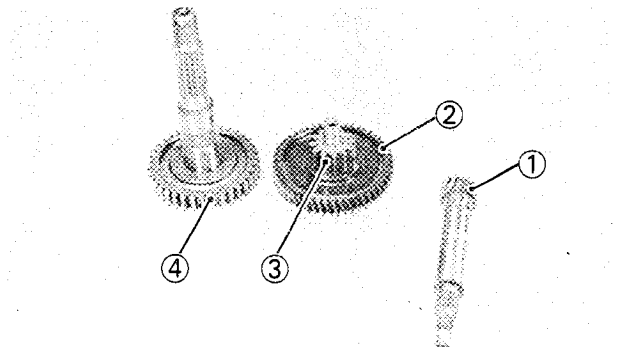

TRANSMISSION

1. Inspect:
   - Primary drive gear teeth ①
   - Primary driven gear teeth ②
   - Secondary drive gear teeth ③
   - Secondary driven gear teeth ④

   Burrs/Chips/Roughness/Wear→Replace.

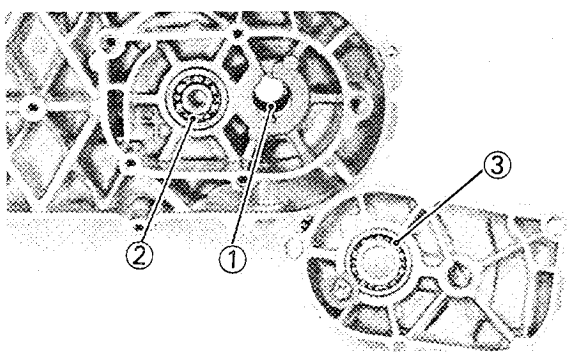

2. Inspect:
   - Drive gear bearing ①
   - Main axle bearing ②
   - Secondary sheave axle bearing ③

   Spin the bearing inner race.
   Excessive play/Roughness→Replace.
   Pitting/Damage→Replace.

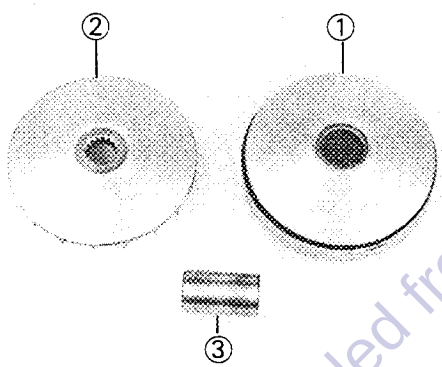

PRIMARY SHEAVE

1. Inspect:
   - Primary sliding sheave ①
   - Primary fixed sheave ②
   - Collar ③

   Wear/Cracks/Scratch/Damage→Replace.

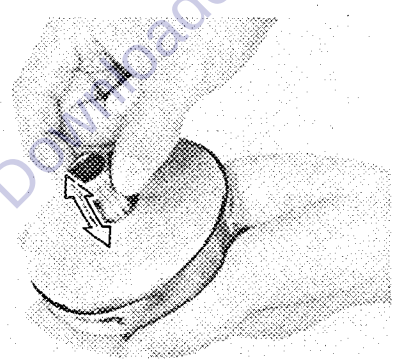

2. Check:
   - Free movement

   Insert the collar into the primary sliding sheave, and check for free movement.
   Stick or excessive play→Replace the sheave or collar.

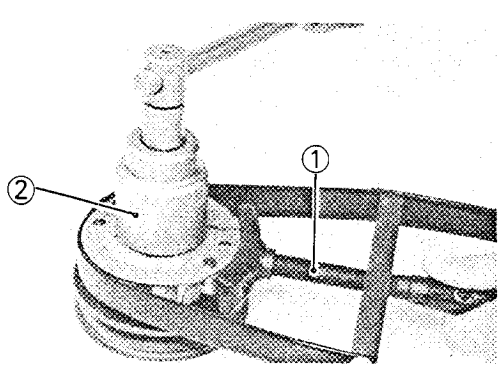

SECONDARY SHEAVE

Disassembly

1. Attach:
   - Primary Sheave Holder (YS-01880) ①
   - Socket Wrench (41 mm) ②
2. Loosen:
   - Clutch securing nut

CAUTION:

Do not remove the clutch securing nut yet.

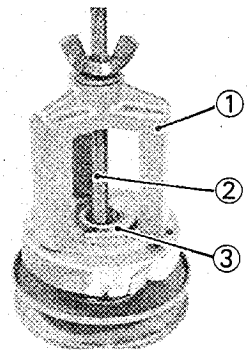

3. Attach:
   - Clutch Spring Holder (YS-28891) ①

NOTE:

Use the following bolt ② available on the market.
Thread: 10 mm (0.39 in)
Pitch: 1.25 mm

4. Remove:
   - Clutch securing nut ③

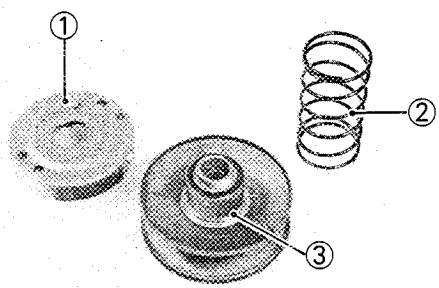

5. Remove:
   - Clutch assembly ①
   - Clutch spring ②
   - Spring seat ③

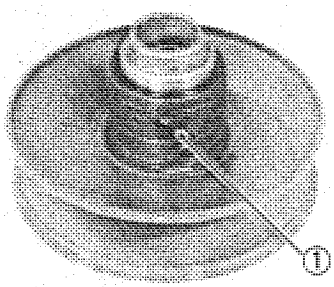

6. Remove:
   - Guide pins ①

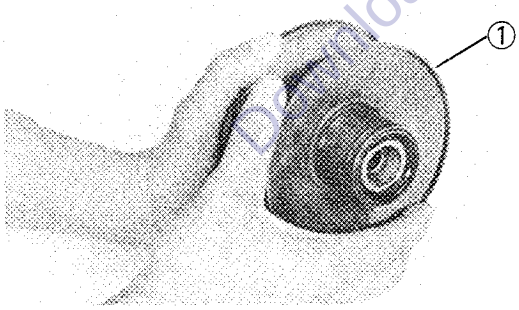

7. Remove:
   - Secondary sliding sheave ①

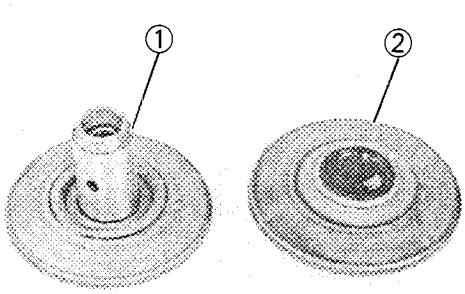

Inspection

1. Inspect:
   - Secondary fixed sheave ①
   - Secondary sliding sheave ②
     Scratch/Crack/Damage→Replace as a set.

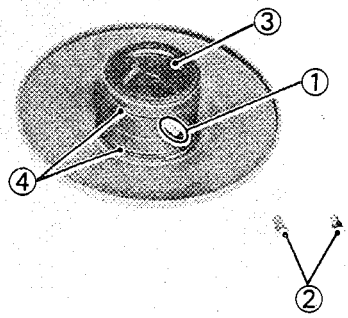

2. Inspect:
   - Torque cam groove ①
   - Guide pin ②
     Wear/Damage→Replace as a set.
   - Oil seals ③
   - O-rings ④
     Damage→Replace.

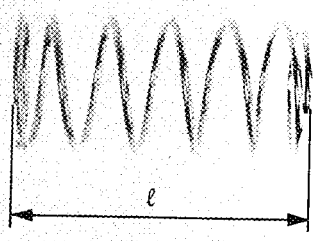

3. Measure:
   - Clutch spring free length ℓ
   Out of specification→Replace.

Clutch Spring Free Length:
109.6 mm (4.31 in)
<Limit>:
94.0 mm (3.70 in)

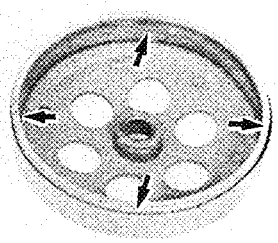

4. Inspect:
   - Clutch housing inner surface
   Oil/Scratches→Remove.

Oil	**Use a rag soaked in lacquer thinner or solvent.**
Scratches	**Use an emery cloth (lightly and evenly polishing).**

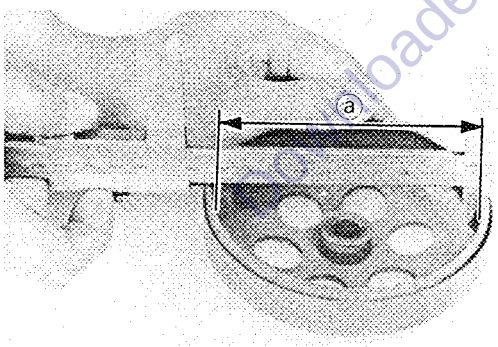

5. Measure:
   - Clutch housing inside diameter ⓐ
   Ouf of specification→Replace.

Clutch Housing Inside Diameter:
105.0 mm (4.13 in)
<Wear Limit>:
105.4 mm (4.15 in)

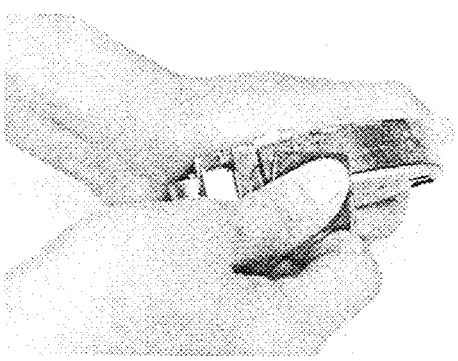

6. Inspect:
   - Clutch shoes
     Glazed parts→Sand with coarse sandpaper.

NOTE:

After using the sand paper, clean of the polished particles with cloth.

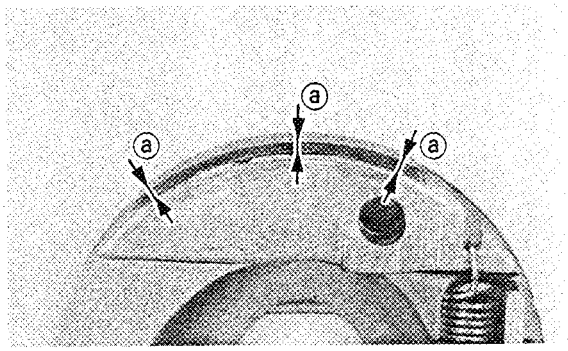

7. Measure:
   - Clutch shoe thickness ⓐ
     Out of specification→Replace.

Clutch Shoe Thickness:
4.0 mm (0.16 in)
<Wear Limit>:
2.5 mm (0.10 in)

Assembly

When assemblying the secondary sheave, reverse the disassembly procedure. Note the following points.

1. Apply:
   - BEL-RAY Assembly Lube®
     (to the inside of the sliding sheave)

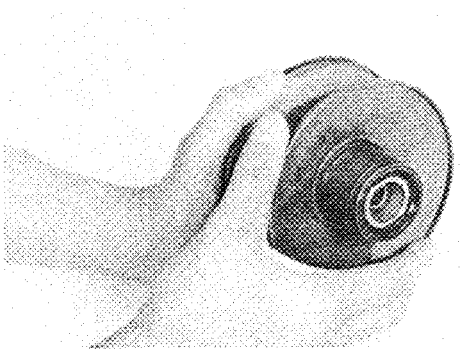

2. Install:
   - Sliding sheave

NOTE:

Be careful so that the oil seal lips are not turned over when installing the sheave.

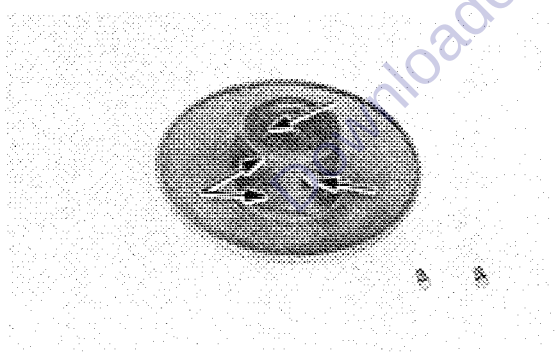

3. Apply:
   - BEL-RAY Assembly Lube®
     (to the torque cam grooves and O-rings)

4. Check:
   - Sliding sheave
     Unsmooth operation→Repair.

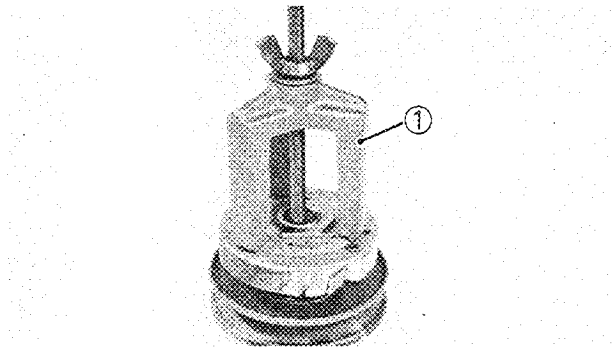

5. Install:
   - Clutch securing nut
     Use Clutch Spring Holder ① (YS-28891).

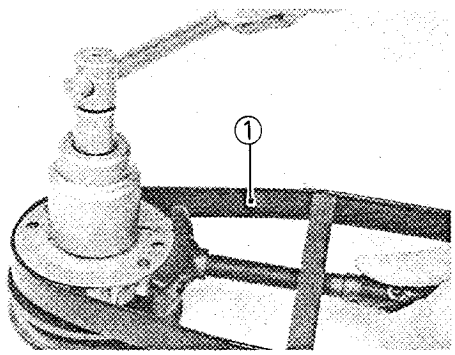

6. Tighten:
   - Clutch securing nut
     Use Sheave Holder ① (YS-01880) and Wrench (41 mm).

	50 Nm (5.0 m•kg, 36 ft•lb)

V-BELT

1. Inspect:
   - V-belt
     Crack/Wear→Replace.

NOTE:

Replace the V-belt smeared with a lot of oil or grease.

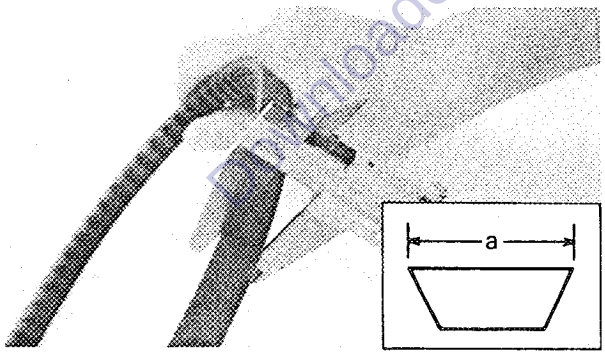

2. Measure:
   - V-belt width ⓐ
     Out of specification→Replace.

	V-Belt Width: **15.0 mm (0.59 in)** **<Wear Limit>:** **13.5 mm (0.53 in)**

STARTER CLUTCH AND GEARS

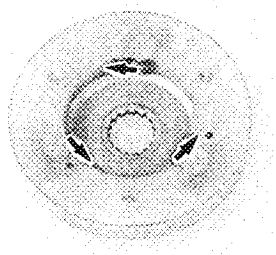

1. Inspect:
   - Starter clutch
     Push the dowel pin to arrow direction.
     Unsmooth operation→Replacce starter clutch assembly.

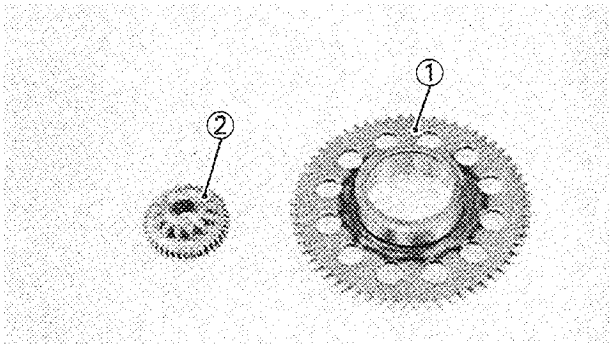

2. Inspect:
   - Starter wheel gear teeth ①
   - Idle gear teeth ②

   Burrs/Chips/Roughness/Wear→Replace.

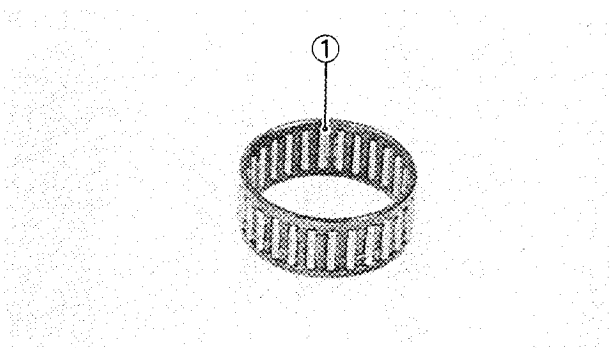

3. Inspect:
   - Bearing ① (Starter wheel gear)

   Pitting/Damage→Replace.

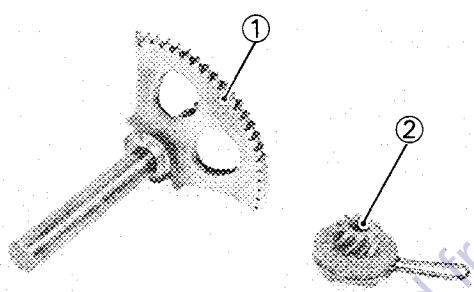

4. Inspect:
   - Kick gear teeth ①
   - Kick pinion gear teeth ②

   Burrs/Chips/Roughness/Wear→Replace.

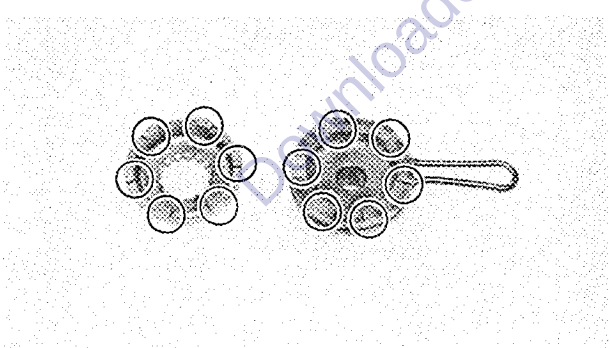

5. Inspect:
   - Mating dogs (Kick pinion gear and one-way clutch)

   Rounded edges/Damage→Replace.

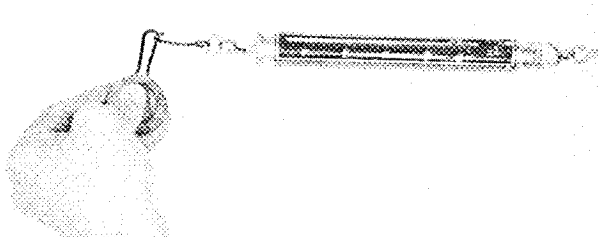

6. Measure:
   - Clip tension (Kick pinion gear)

   Out of spedification→Replace.
   Use a spring balance.

Standard Tension: **250～300 g (8.83～10.6 oz)**

ENGINE ASSEMBLY AND ADJUSTMENT

CRANKSHAFT AND CRANKCASE

CAUTION:

To protect the crankshaft against scratches or to facilitate the operation of the installation.
Apply the grease to the oil seal lips, and apply the engine oil to each bearing.

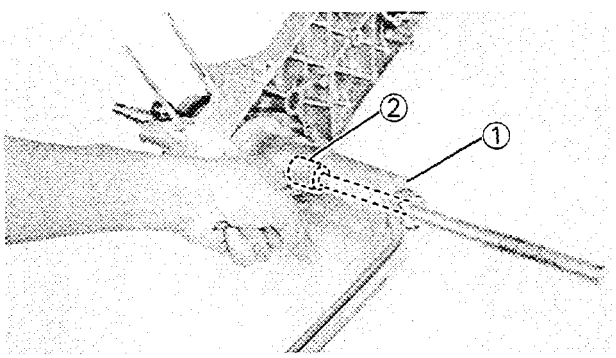

1. Attach:
   - Crankshaft Installing Tool (YU-90050 ①, YM-90062 ②)
2. Install:
   - Crankshaft
     To left crankcase.

NOTE:
Hold the connecting rod at top dead center with one hand while turning the nut of the Installing Tool with the other. Operate the Installing Tool until the crankshaft bottoms against the bearing.

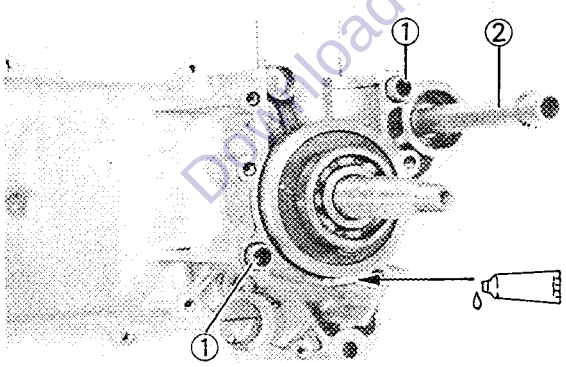

3. Apply:
   - Sealant (Quick Gasket®) (ACC-11001-30-00)
     To the mating surfaces of both case halves.
4. Install:
   - Dowel pins ①
   - Spacer ②

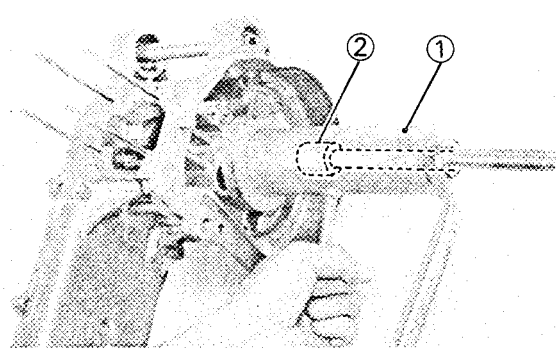

5. Install:
   - Right crankcase
     Use crankshaft Installing Tool (YU-90050 ①, YM-90063 ②).

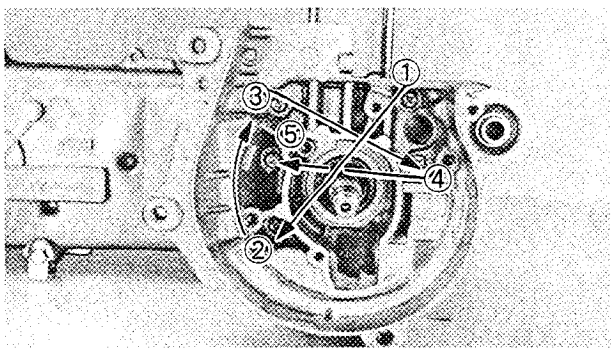

6. Tighten:
   - Crankcase holding screws

NOTE:

Tighten the crankcase holding screws in stage, using a crisscross pattern.

	8 Nm (0.8 m•kg, 5.8 ft•lb)

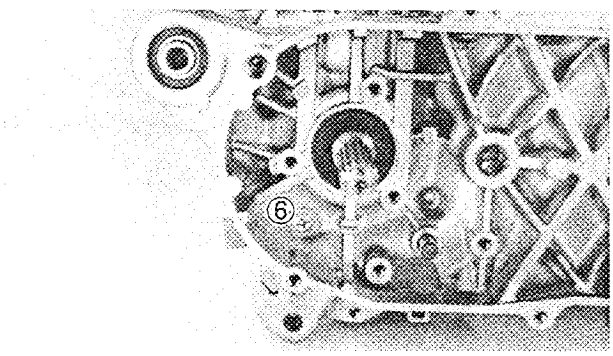

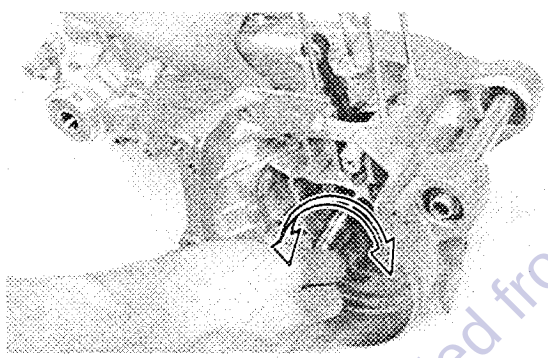

7. Check:
   - Crankshaft operation
     Unsmooth operation→Repair.

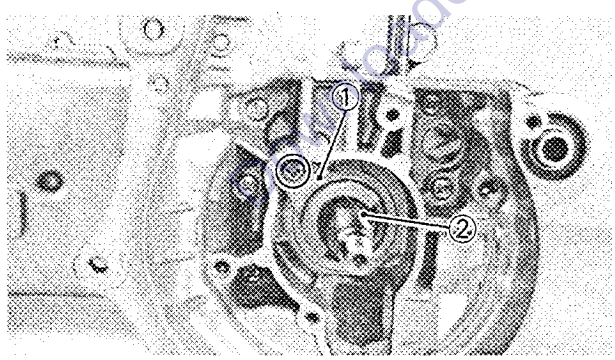

8. Install:
   - Oil seal stopper plate ①
   - Circlip ②

	Screw (Oil Seal Stopper Plate): 13 Nm (1.3 m•kg, 9.4 ft•lb)

CRANKSHAFT

① Oil seal
② Bearing
③ Crank (Right)
④ Crank pin
⑤ Bearing
⑥ Connecting rod
⑦ Crank (Left)
⑧ Bearing
⑨ Oil seal

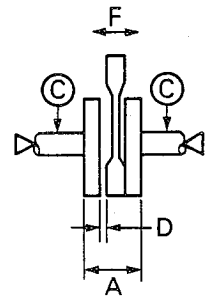

A: 37.90 ~ 37.95 mm (1.492 ~ 1.494 in)
C: 0.03 mm (0.0012 in)
D: 0.2 ~ 0.5 mm (0.008 ~ 0.020 in)
F: 0.4 ~ 0.8 mm (0.015 ~ 0.031 in)

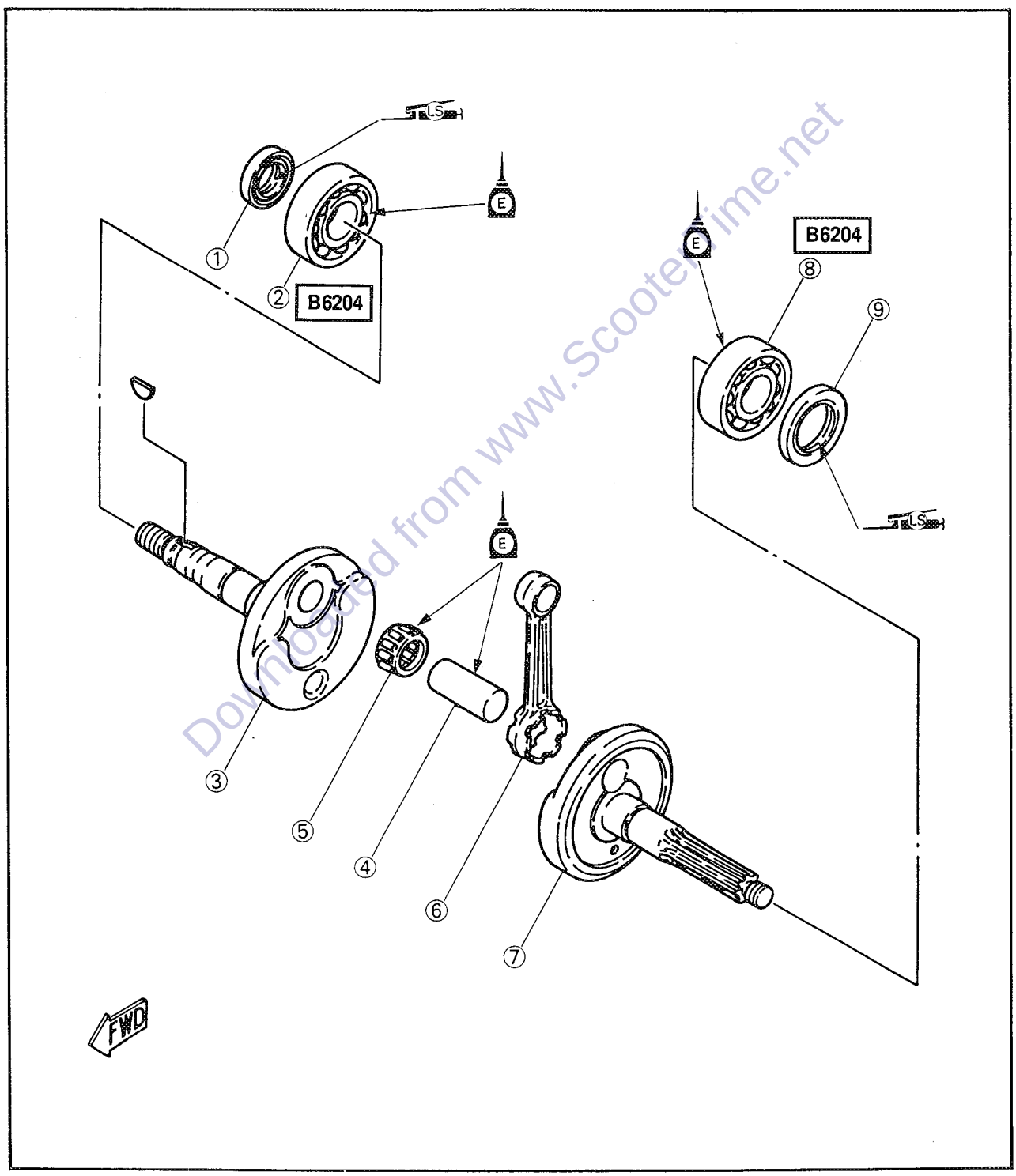

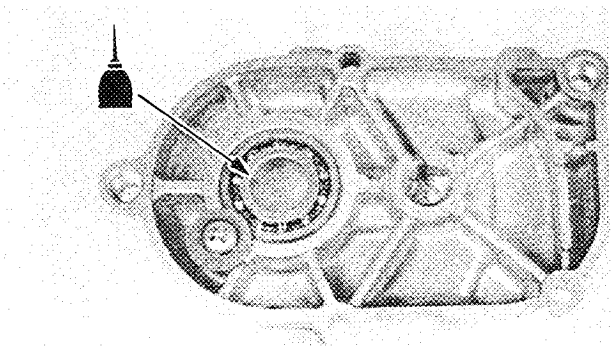

TRANSMISSION

1. Apply:
   - 10W30 Type SE Motor oil
     (to transmission case cover bearing)

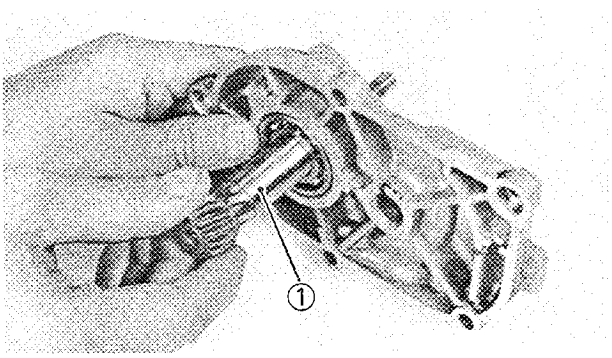

2. Install:
   - Secondary sheave axle ①
     (to transmission case cover)

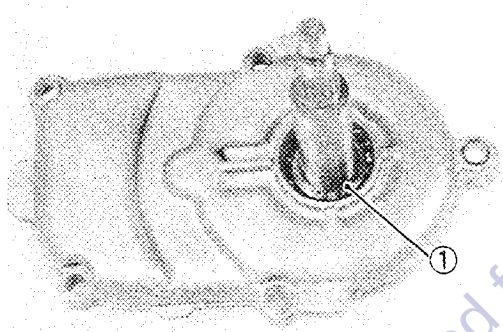

3. Install:
   - Circlip ①
   - Oil seal

NOTE:

Apply lithium soap base grease onto the oil seal lips.

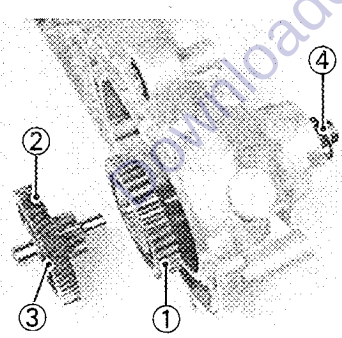

4. Apply:
   - 10W30 type SE Motor oil
     (to main axle bearing and drive axle bearing)

5. Install:
   - Drive axle ①
   - Main axle ②
   - Washer ③ (Main axle)
   - Washer ④ (Drive axle)

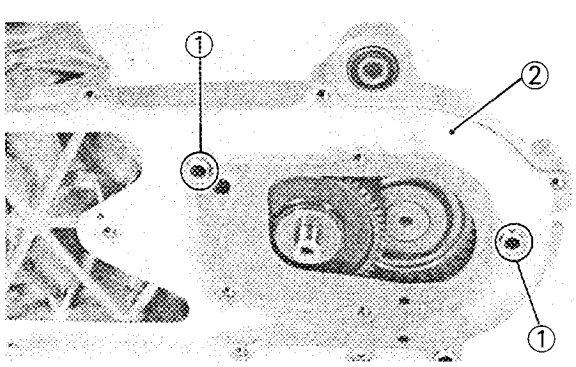

6. Install:
   - Dowel pins ①
   - Gasket ②

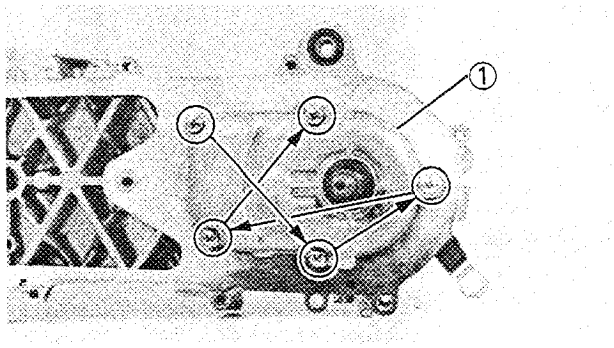

7. Install:
   - Transmission case cover ①

	Screw (Case cover): 8 Nm (0.8 m•kg, 5.8 ft•lb)

8. Install:
   - Centerstand

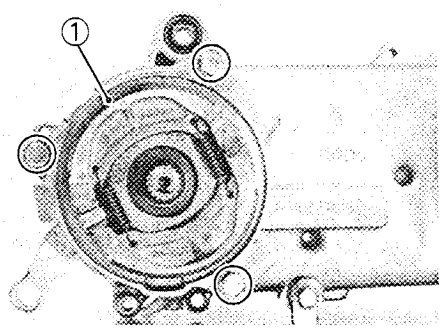

9. Install:
   - Brake shoe plate ①

	Bolt (Brake Shoe Plate): 18 Nm (1.8 m•kg, 13 ft•lb)

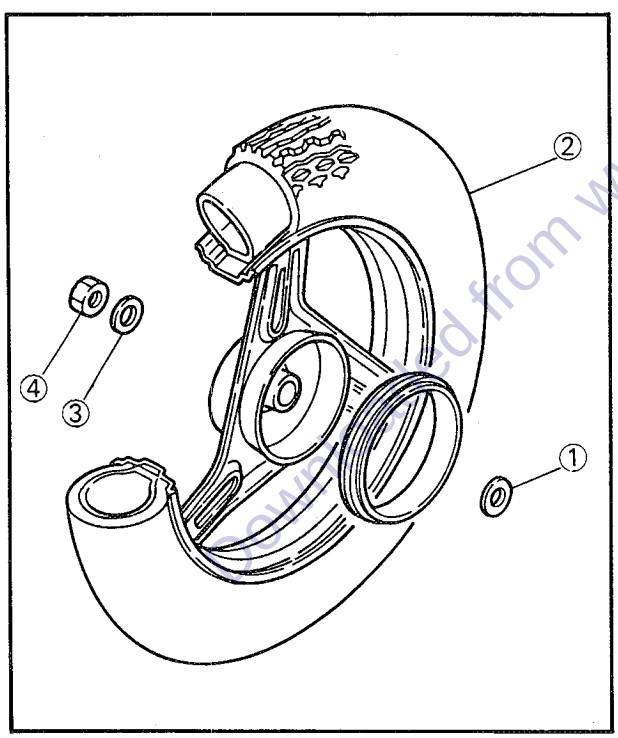

10. Install:
    - Plain washer ①
    - Rear wheel ②
    - Plain washer ③
    - Nut ④

	93 Nm (9.3 m•kg, 67 ft•lb)

TRANSMISSION

① Bearing
② Oil seal
③ Drive axle
④ Bearing
⑤ Main axle
⑥ Plain washer
⑦ Secondary sheave axle
⑧ Bearing
⑨ Circlip
⑩ Oil seal

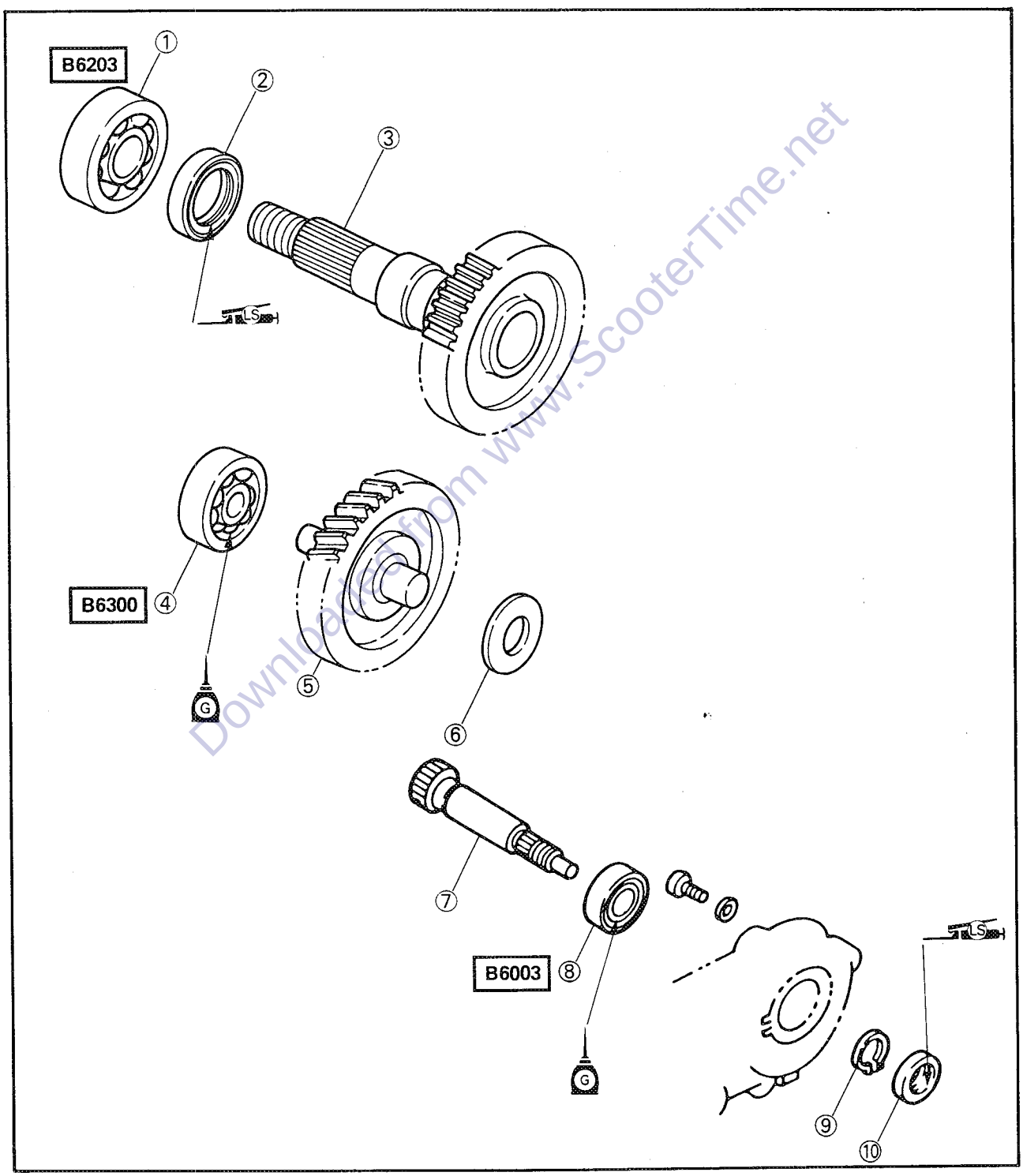

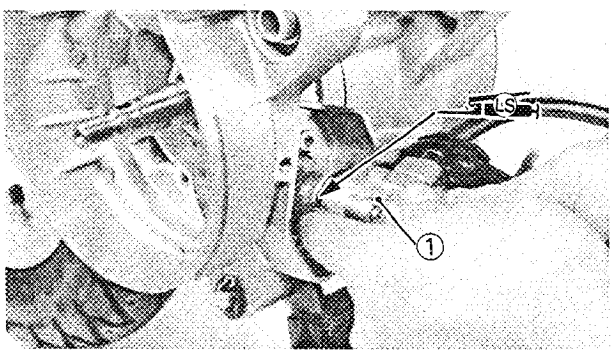

AUTOLUBE PUMP

1. Apply:
   - Lithium soap base grease (to O-ring)

2. Install:
   - Autolube pump ①

	Screw (Autolube Pump): 4 Nm (0.4 m•kg, 2.9 ft•lb)

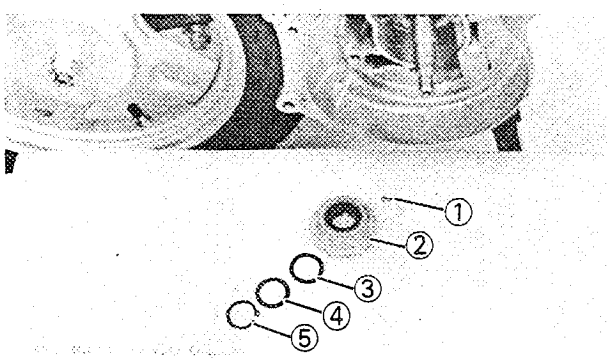

3. Install:
   - Pin ①
   - Pump drive gear ②
   - Wave washer ③
   - Shim ④
   - Circlip ⑤

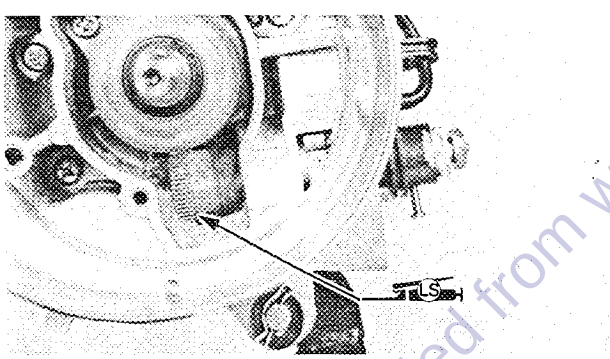

4. Apply:
   - Lithium soap base grease (to Autolube pump gear)

	15 cc (0.92 cu•in)

AUTOLUBE PUMP

① Autolube pump
② Pin
③ Circlip
④ Shim
⑤ Wave washer
⑥ Pump drive gear
⑦ Circlip

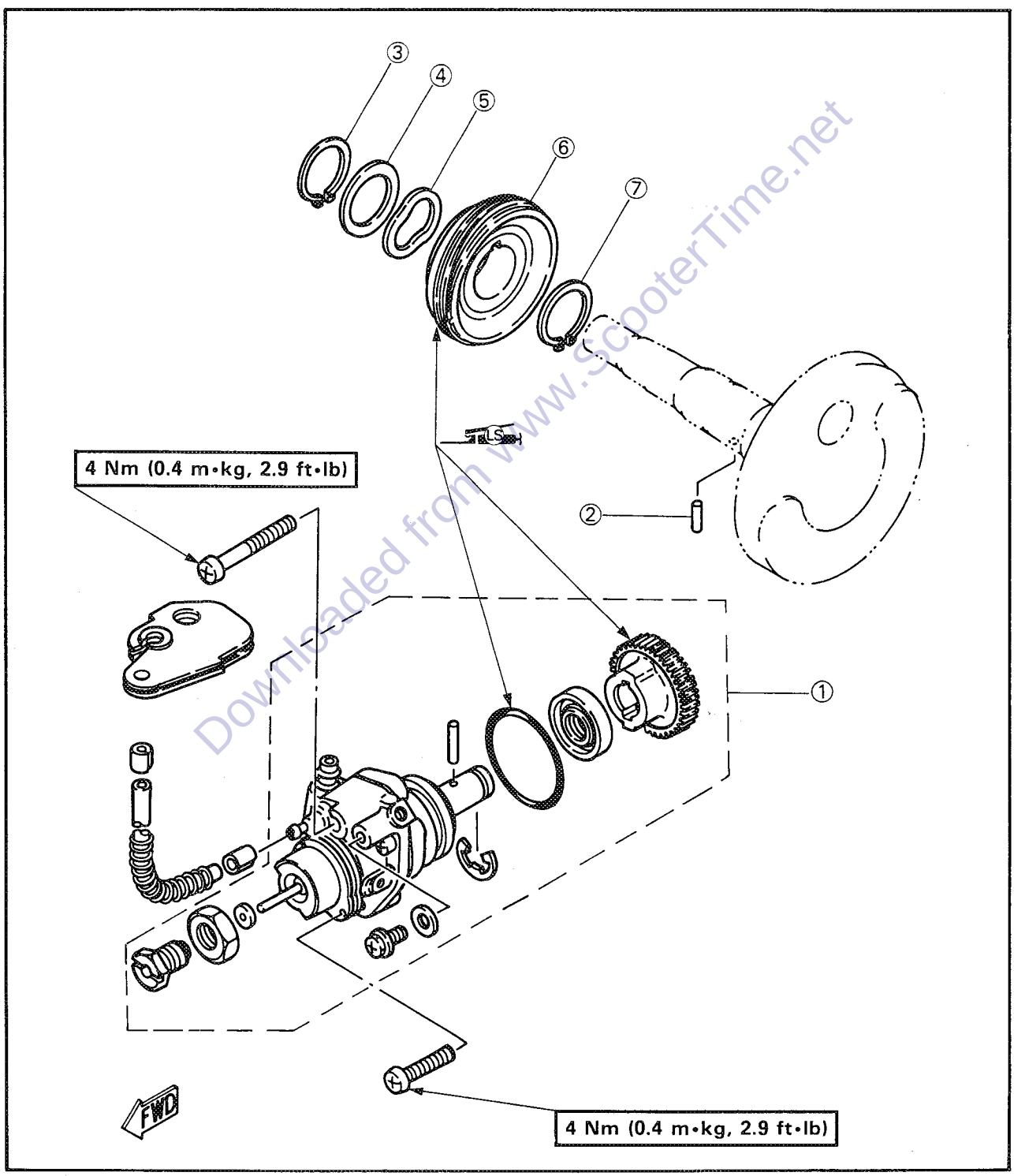

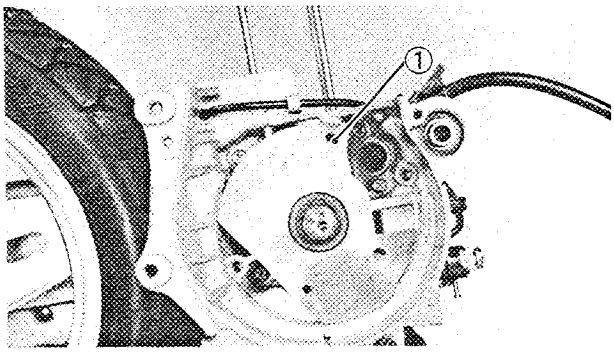

C.D.I. MAGNETO

1. Install:
   - Gasket ①

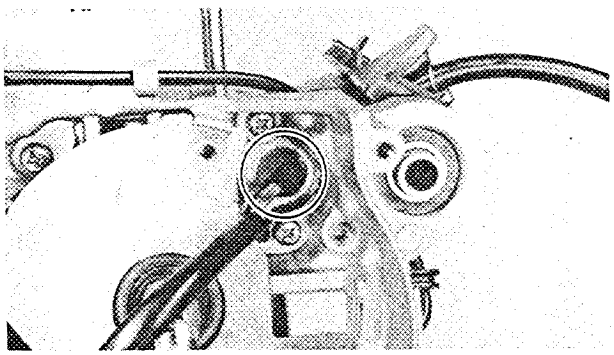

2. Pass the C.D.I. magneto lead through the crankcase hole.

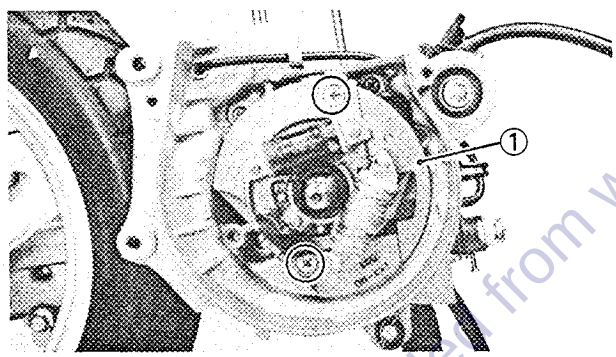

3. Install:
   - Stator assembly ①

	Screw (Stator Assembly): 8 Nm (0.8 m•kg, 5.8 ft•lb)

4. Install:
   - Woodruff key
   - C.D.I. magneto
   - Plain washer
   - Spring washer
   - Nut

NOTE:

When installing the C.D.I. magneto, make sure the woodruff key is properly seated in the key way of the crankshaft. Apply a light coating of lithium soap base grease to the tapered portion of the crankshaft end.

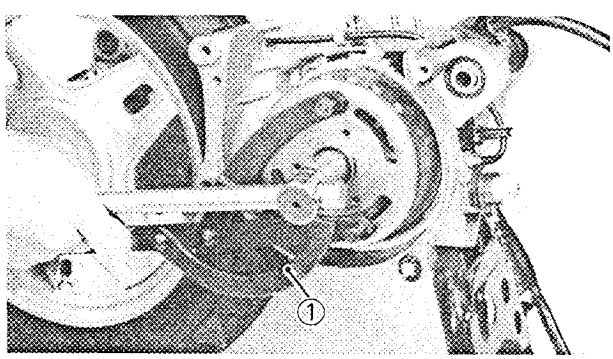

5. Tighten:
   - Nut (C.D.I. magneto)
     Use Flywheel Holding Tool (YU-01235) ①.

	43 Nm (4.3 m•kg, 31 ft•lb)

C.D.I. MAGNETO

① Fan
② C.D.I. magneto
③ Stator assembly
④ Gasket
⑤ Woodruff key

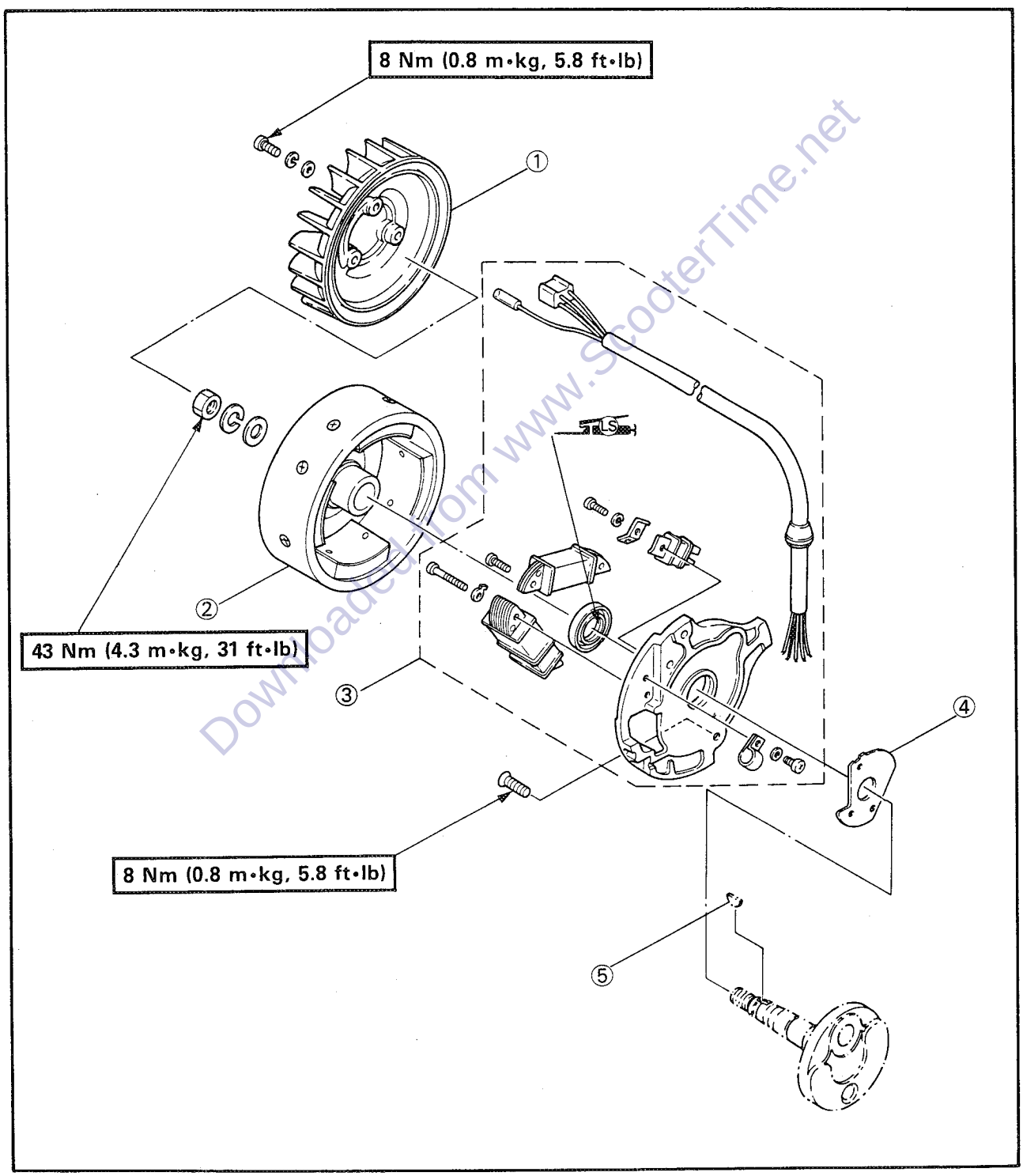

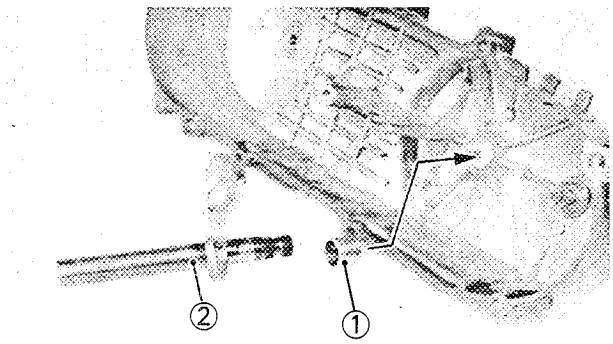

STARTER SYSTEM

1. Install:
   - Collar ①
   - Kick shaft ②

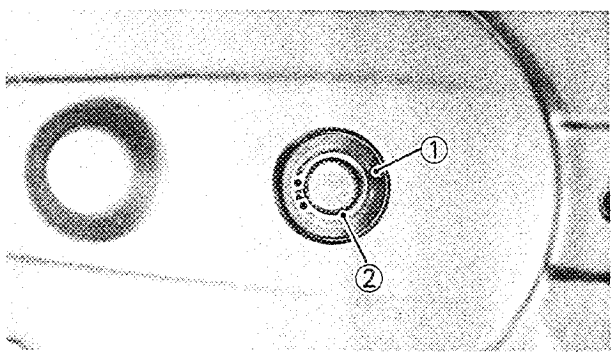

2. Install:
   - Plain washer ①
   - Circlip ②

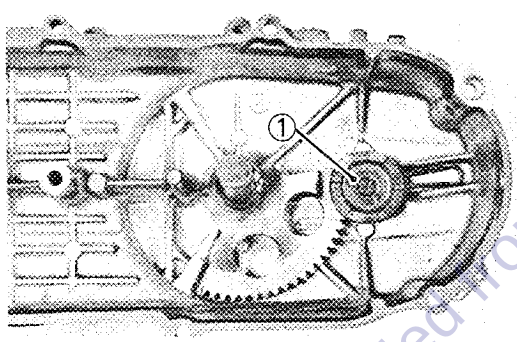

3. Install:
   - Kick pinion gear ①

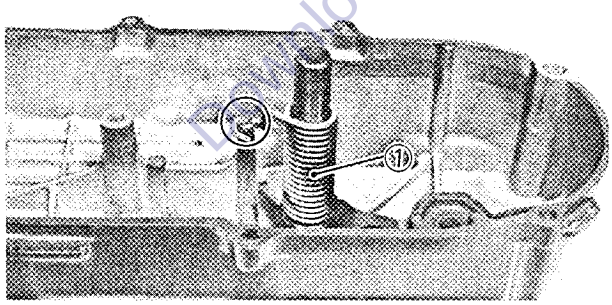

4. Install:
   - Kick torsion spring ①

NOTE:

Set the kick torsion spring to the spring hook.

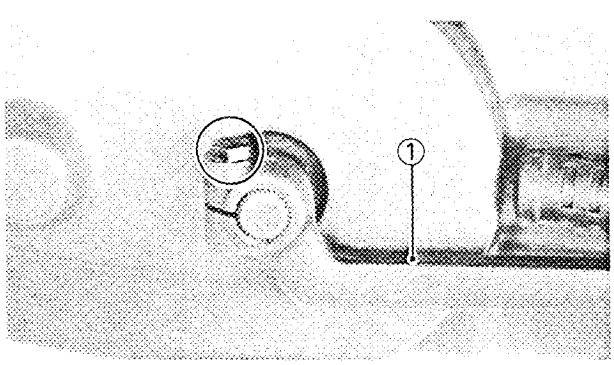

5. Install:
   - Kick crank ①

	10 Nm (1.0 m•kg, 7.2 ft•lb)

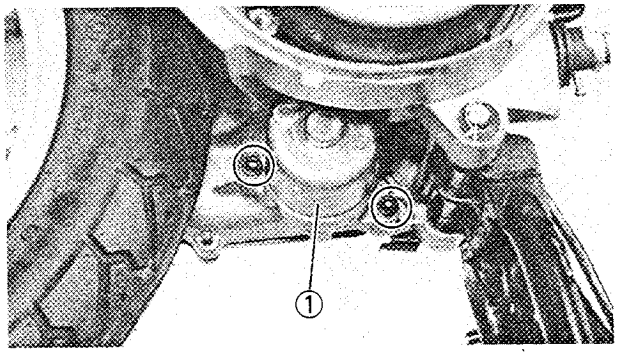

6. Install:
   - Starter motor ①

	8 Nm (0.8 m•kg, 5.8 ft•lb)

NOTE:

Apply lithium soap base grease to the O-ring of the starter motor.

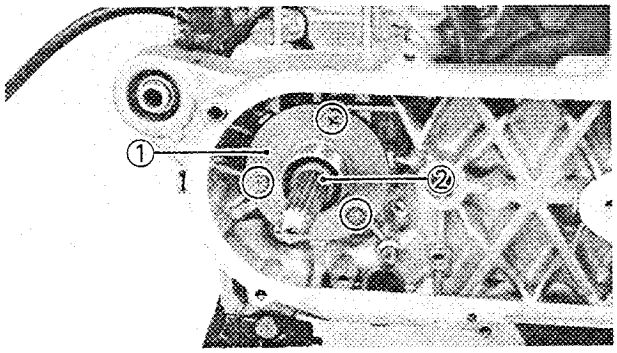

7. Install:
   - Stay ①
   - Collar ②

	Screw (Stay): **8 Nm (0.8 m•kg, 5.8 ft•lb)**

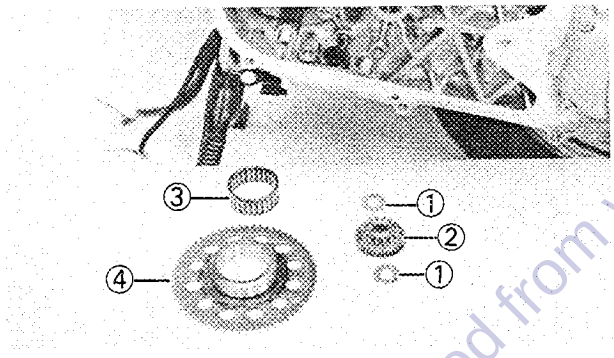

8. Install:
   - Plain washers ①
   - Idle gear ②
   - Bearing ③
   - Starter wheel gear ④

NOTE:

- Apply Yamalube 2 cycle oil to the idle gear ②.
- Apply lithium soap base grease to the bearing ③.

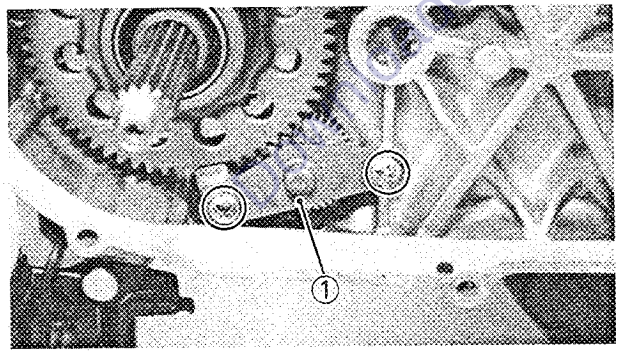

9. Install:
   - Plate ① (Idle gear)

	Screw (Idle Gear Plate): **8 Nm (0.8 m•kg, 5.8 ft•lb)**

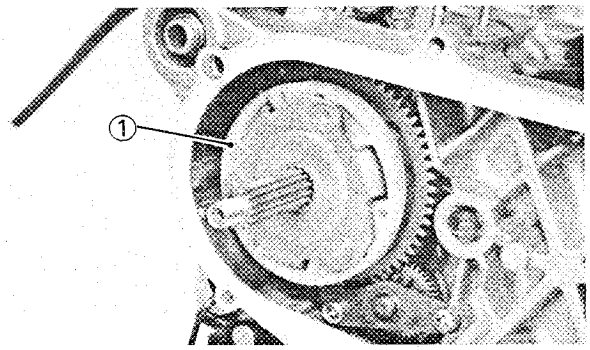

10. Install:
   - Starter clutch assembly ①

STARTER SYSTEM

① Kick shaft
② Kick torsion spring
③ Kick crank
④ Idle gear
⑤ Collar
⑥ Stay
⑦ Bearing
⑧ Starter wheel gear
⑨ Starter clutch assembly
⑩ Kick pinion gear

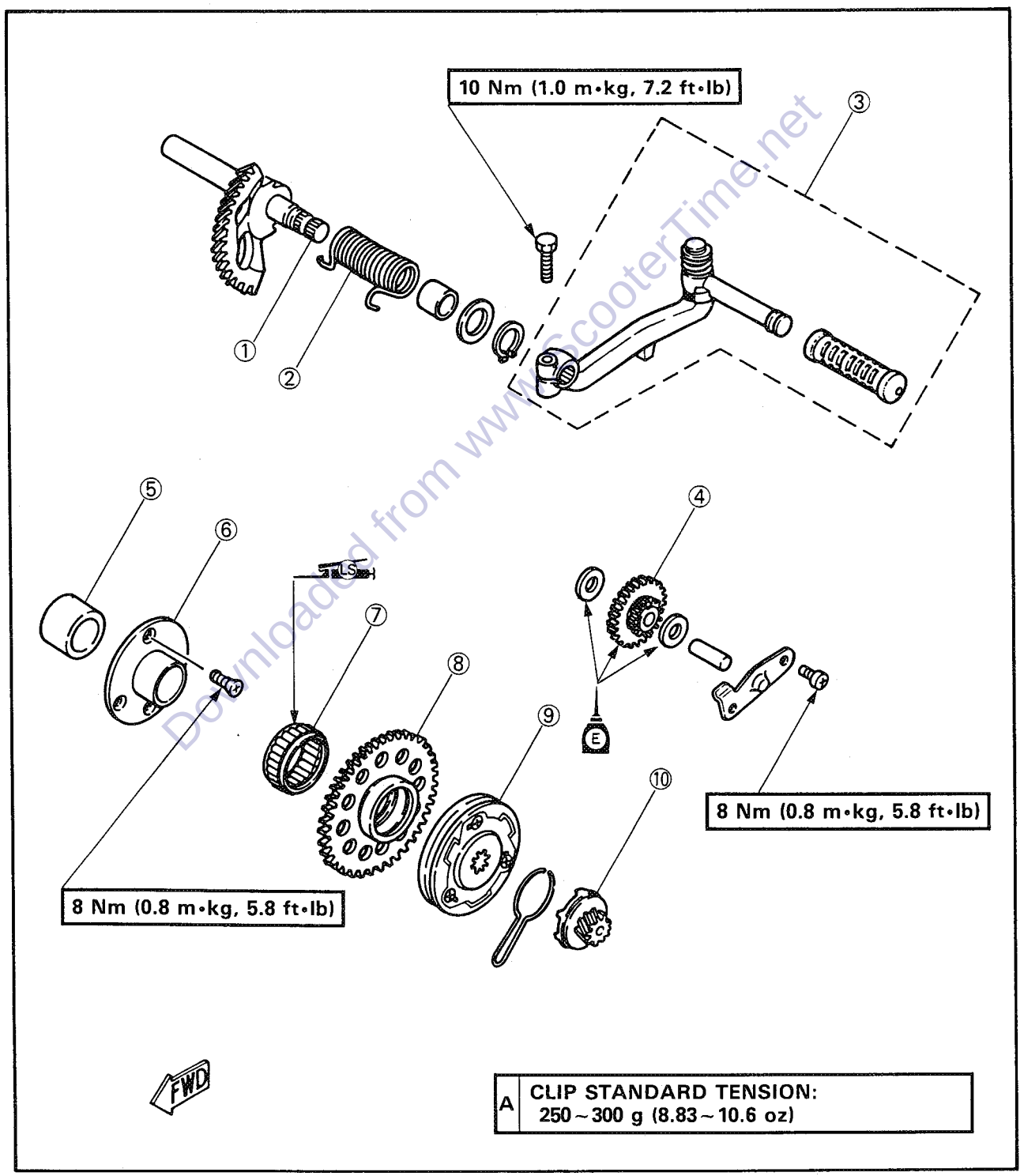

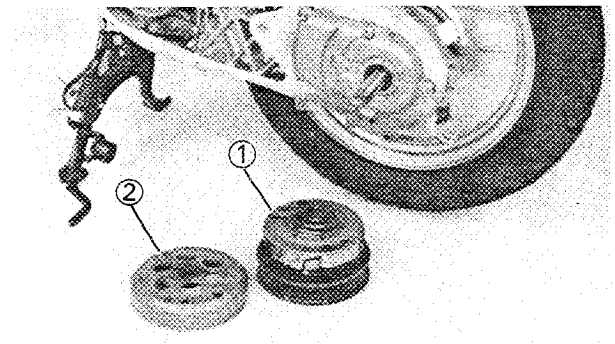

PRIMARY AND SECONDARY SHEAVE

1. Install:
   - Secondary sheave assembly ①
   - Clutch housing ②

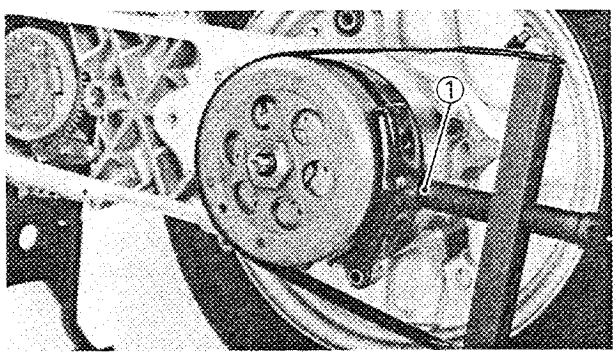

2. Tighten:
   - Nut (Secondary sheave)
     Use Sheave Holder ① (YS-01880).

	40 Nm (4.0 m•kg, 29 ft•lb)

3. Install:
   - O-ring

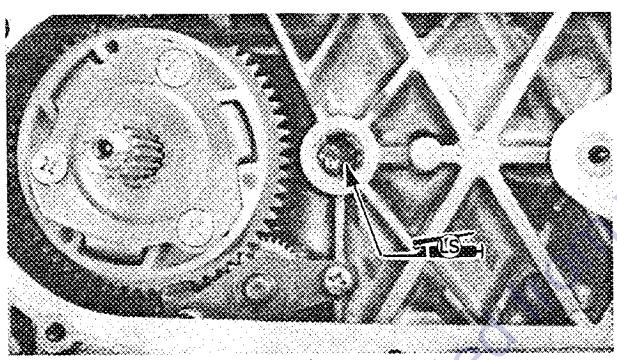

4. Apply:
   - Lithium soap base grease

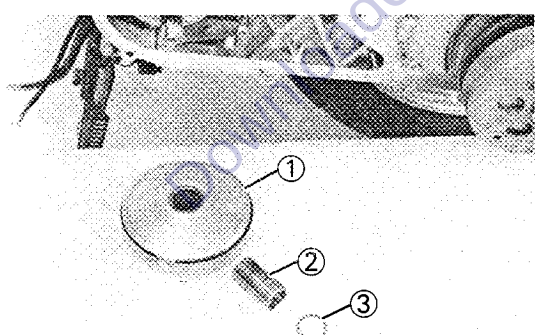

5. Install:
   - Primary sheave assembly ①
   - Collar ②
   - Shim ③

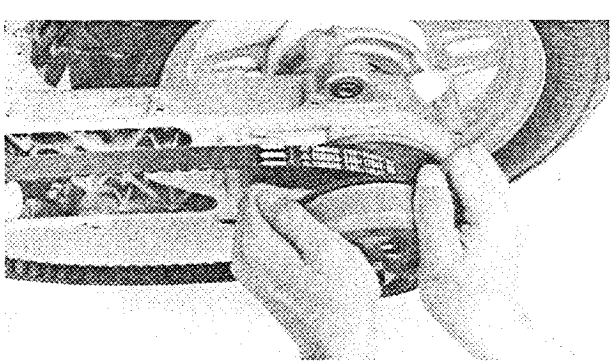

6. Install:
   - V-belt
     Place the V-belt around the secondary sheave, and compress the secondary sheave spring hard so that the V-belt moves toward the clutch hub.

NOTE:

The V-belt must be installed with the arrow frontward.

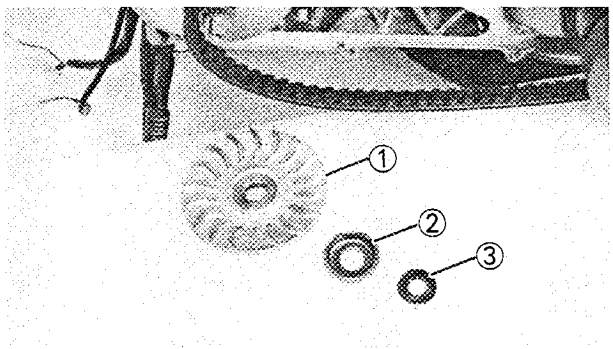

7. Install:
   - Primary fixed sheave ①
   - One-way clutch ②
   - Conical spring washer ③
   - Nut

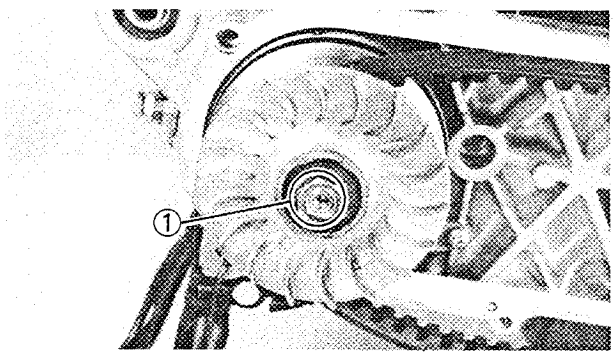

8. Tighten:
   - Nut (primary sheave) ①

	30 Nm (3.0 m•kg, 22 ft•lb)

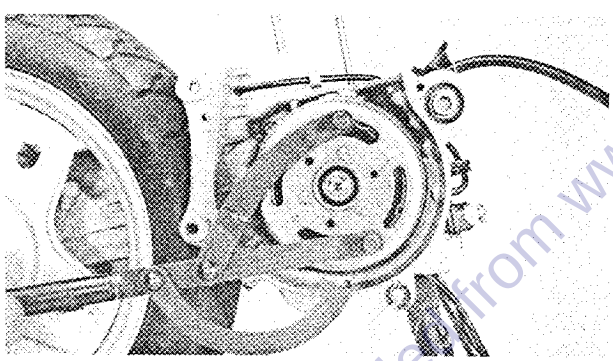

NOTE:
When tightening the nut (primary sheave), hold the C.D.I. magneto using Flywheel Holding Tool (YU-01235).

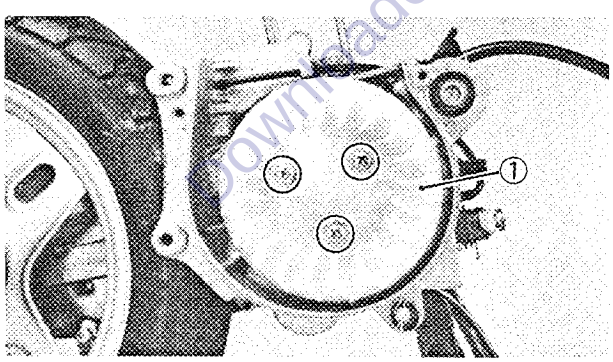

9. Install:
   - Fan ①

	Screw (Fan): **8 Nm (0.8 m•kg, 5.8 ft•lb)**

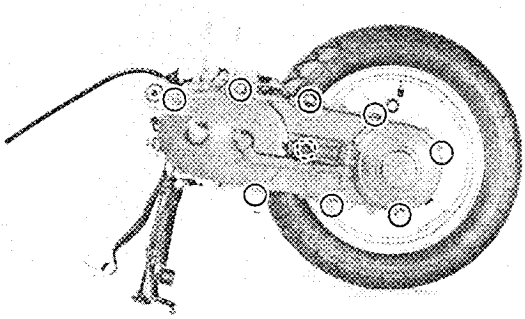

10. Install:
   - Dowel pins
   - Crankcase cover (Left)

	Screw (Crankcase Cover): **8 Nm (0.8 m•kg, 5.8 ft•lb)**

PRIMARY AND SECONDARY SHEAVE

① Secondary fixed sheave
② Oil seal
③ Secondary sliding sheave
④ O-ring
⑤ Oil seal
⑥ Spring seat
⑦ Clutch spring
⑧ Clutch assembly
⑨ Clutch housing
⑩ O-ring
⑪ Primary sheave assembly
⑫ V-belt
⑬ Primary fixed sheave
⑭ One-way clutch

*Apply BEL-RAY Assembly Lube®

A	CLUTCH SPRING FREE LENGTH LIMIT: 94.0 mm (3.70 in)
B	CLUTCH HOUSING WEAR LIMIT: 105.4 mm (4.15 in)
C	CLUTCH SHOE WEAR LIMIT: 2.5 mm (0.10 in)
D	V-BELT WEAR LIMIT: 13.5 mm (0.53 in)

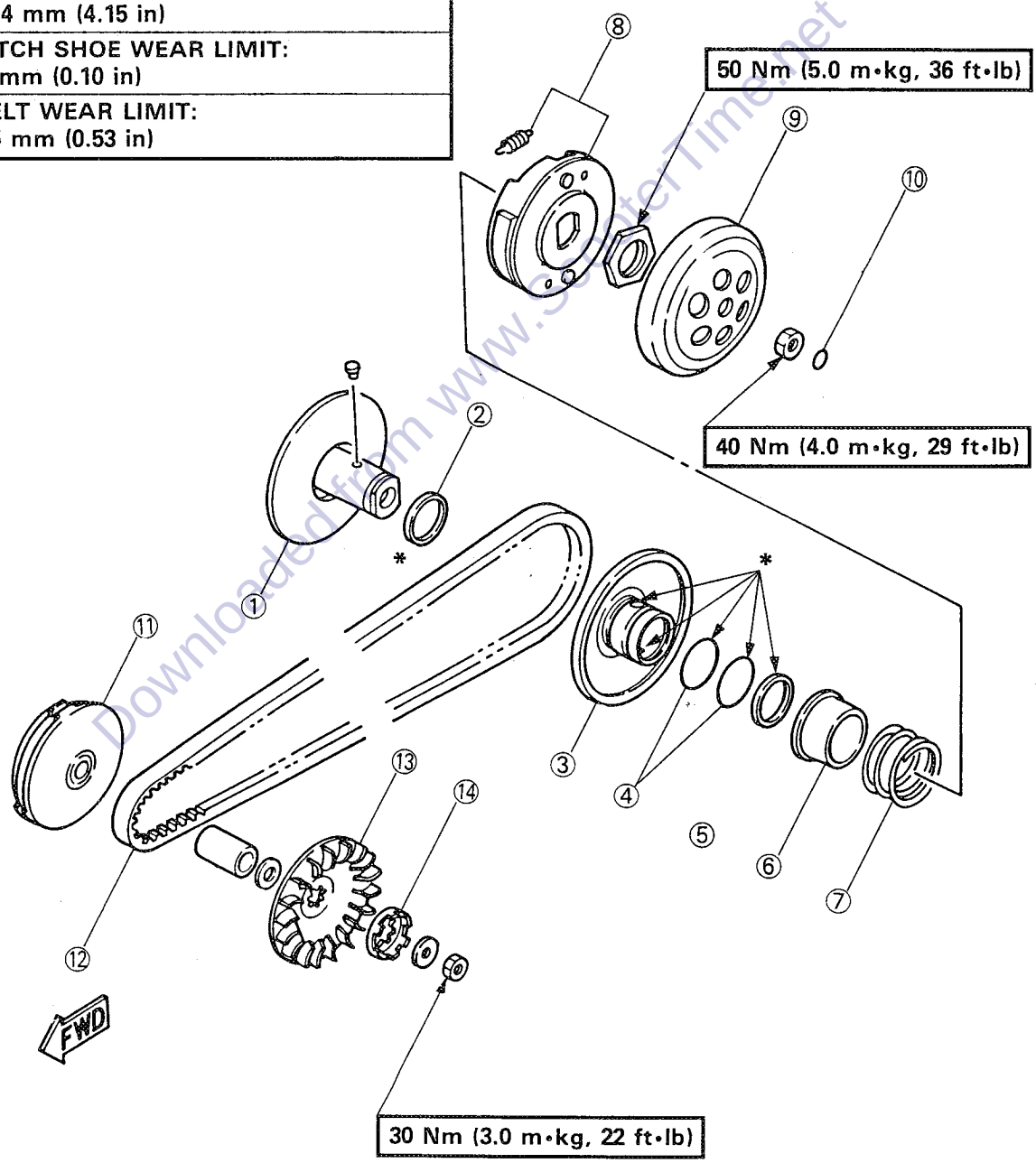

PISTON PIN AND PISTON

1. Apply:
   - Yamalube 2 cycle oil
     To the piston pin, bearing, piston ring grooves and piston skirt areas.

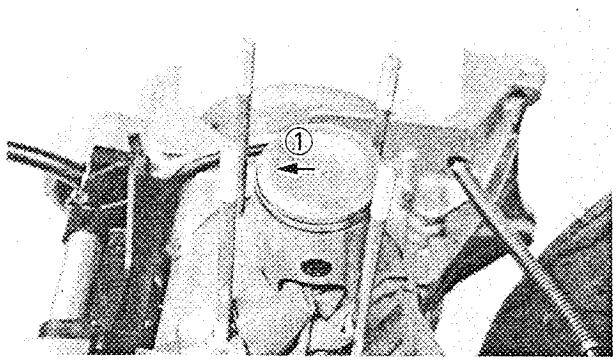

2. Install:
   - Small end bearing
   - Piston
   - Piston pin
   - Piston pin clip

NOTE:

- The arrow 1 on the piston must point to the front of the engine.
- Before installing the piston pin clip, cover the crankcase with a clean towel or rag so you will not accidentally drop the pin clip and material into the crankcase.
- Always use a new piston pin clip.

PISTON PIN AND PISTON

① Piston ring (1st, 2nd)
② Piston
③ Piston pin clip
④ Piston pin
⑤ Piston pin clip
⑥ Small end bearing

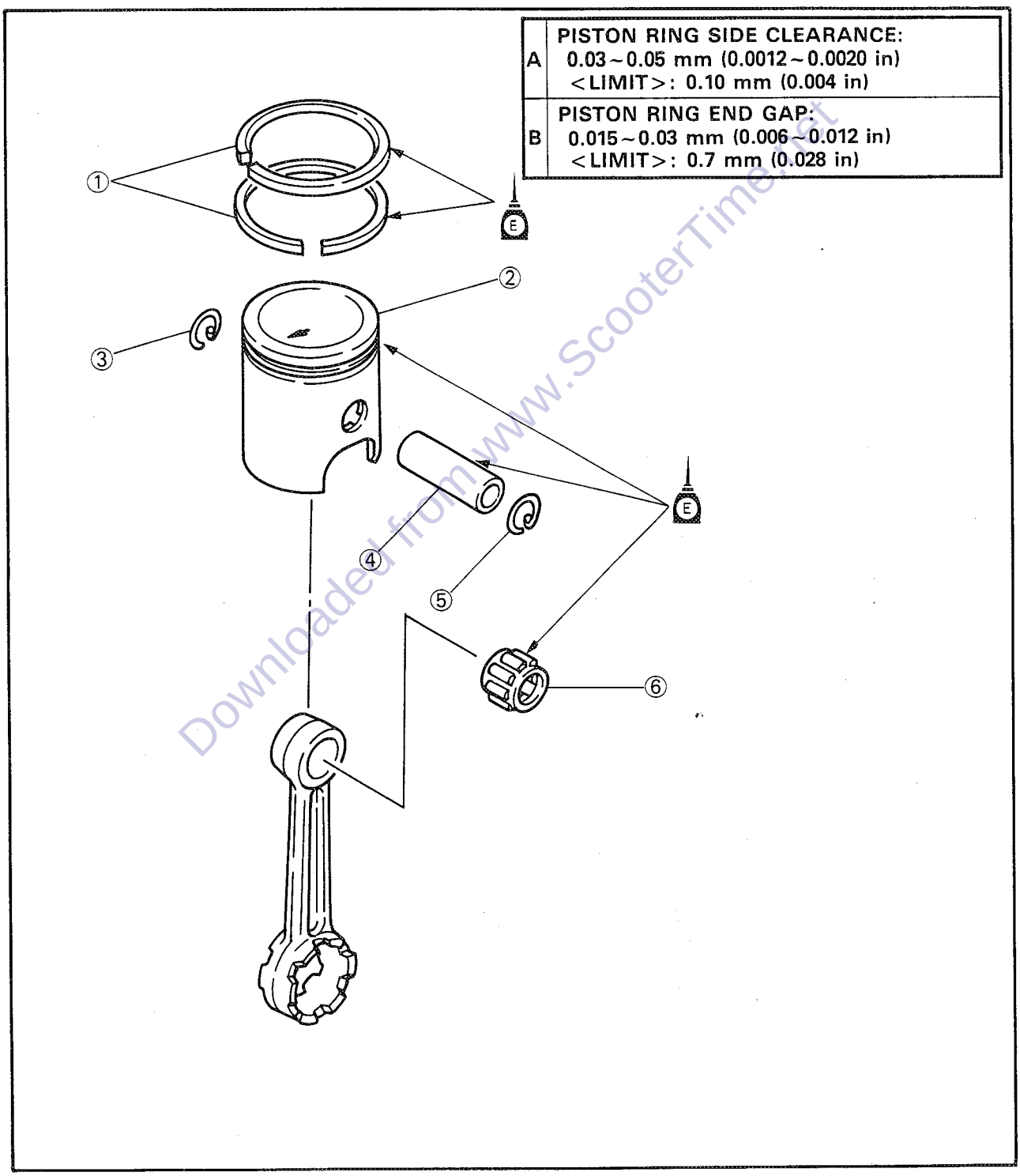

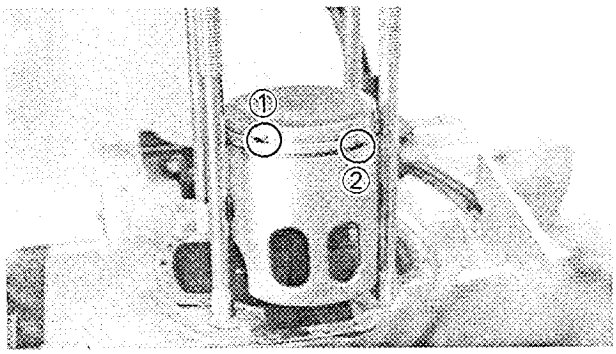

CYLINDER AND CYLINDER HEAD

1. Install:
   - Cylinder gasket (New gasket)
2. Offset the piston ring end gaps as shown.

① 1st ring
② 2nd ring

NOTE:

- Be sure to check the manufacturer's marks or numbers stamped on the rings are on the top side of the rings.
- Before installing the cylinder, apply a liberal coating of 2-stroke to the pisotn rings.

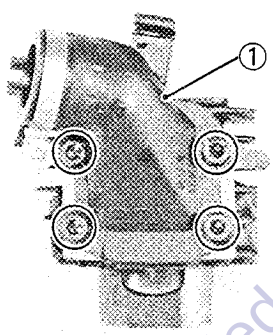

3. Install:
   - Reed valve
   - Carburetor joint ①

	Bolt (Carburetor Joint): 8 Nm (0.8 m•kg, 5.8 ft•lb)

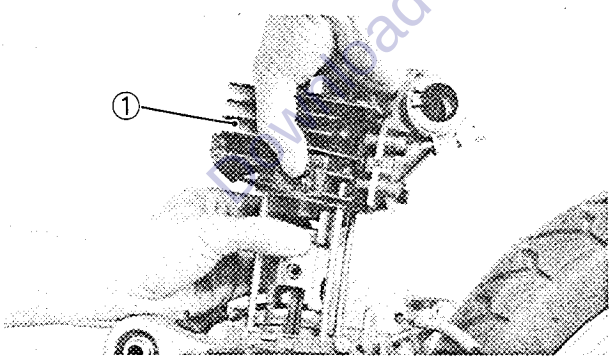

4. Install:
   - Cylinder ①

NOTE:

Install the cylinder with one hand while compressing the piston rings with the other hand.

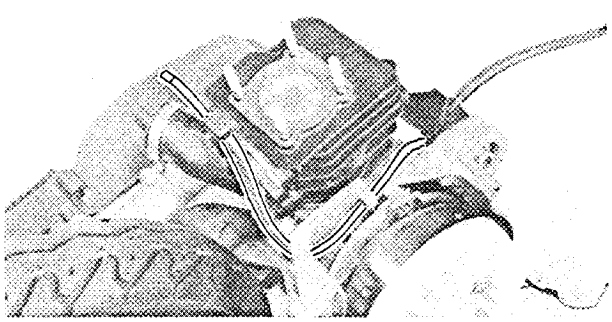

5. Pass the oil delivery pipe as shown.

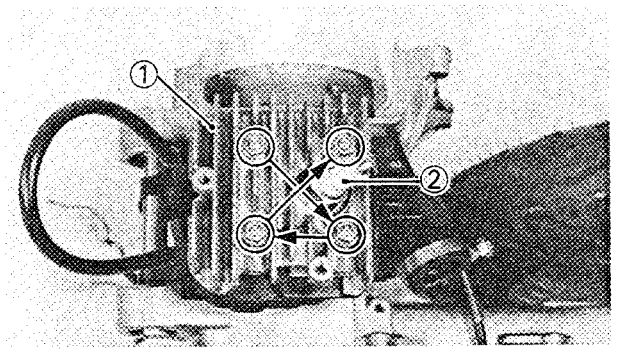

6. Install:
   - Cylinder head gasket (New gasket)
7. Install:
   - Cylinder head ①
   - Spark plug ②

NOTE:

Tighten the cylinder head holding nuts in stage, using a crisscross pattern.

Cylinder Head Holding Nuts: **10 Nm (1.0 m•kg, 7.2 ft•lb)** **Spark Plug:** **20 Nm (2.0 m•kg, 14 ft•lb)**

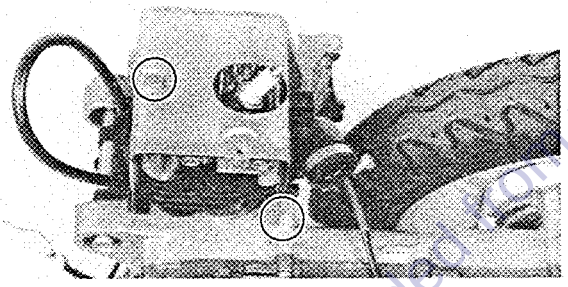

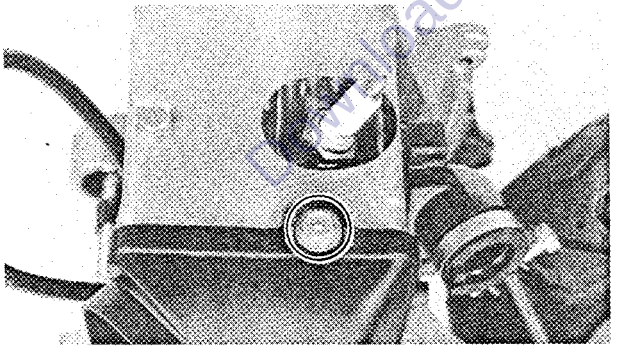

8. Install:
   - Air shroud

Bolt (Air Shroud): **8 Nm (0.8 m•kg, 5.8 ft•lb)**

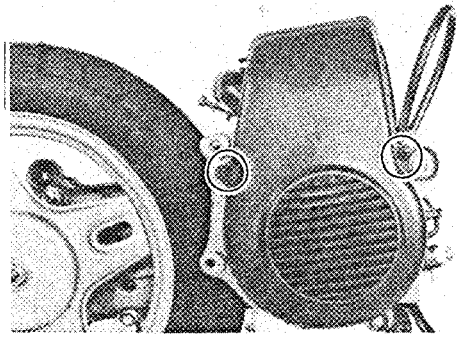

9. Install:
   - Fan cover

Screw (Fan cover): **8 Nm (0.8 m•kg, 5.8 ft•lb)**

CYLINDER AND CYLINDER HEAD

① Spark plug
② Cylinder head
③ Gasket
④ Cylinder
⑤ Gasket

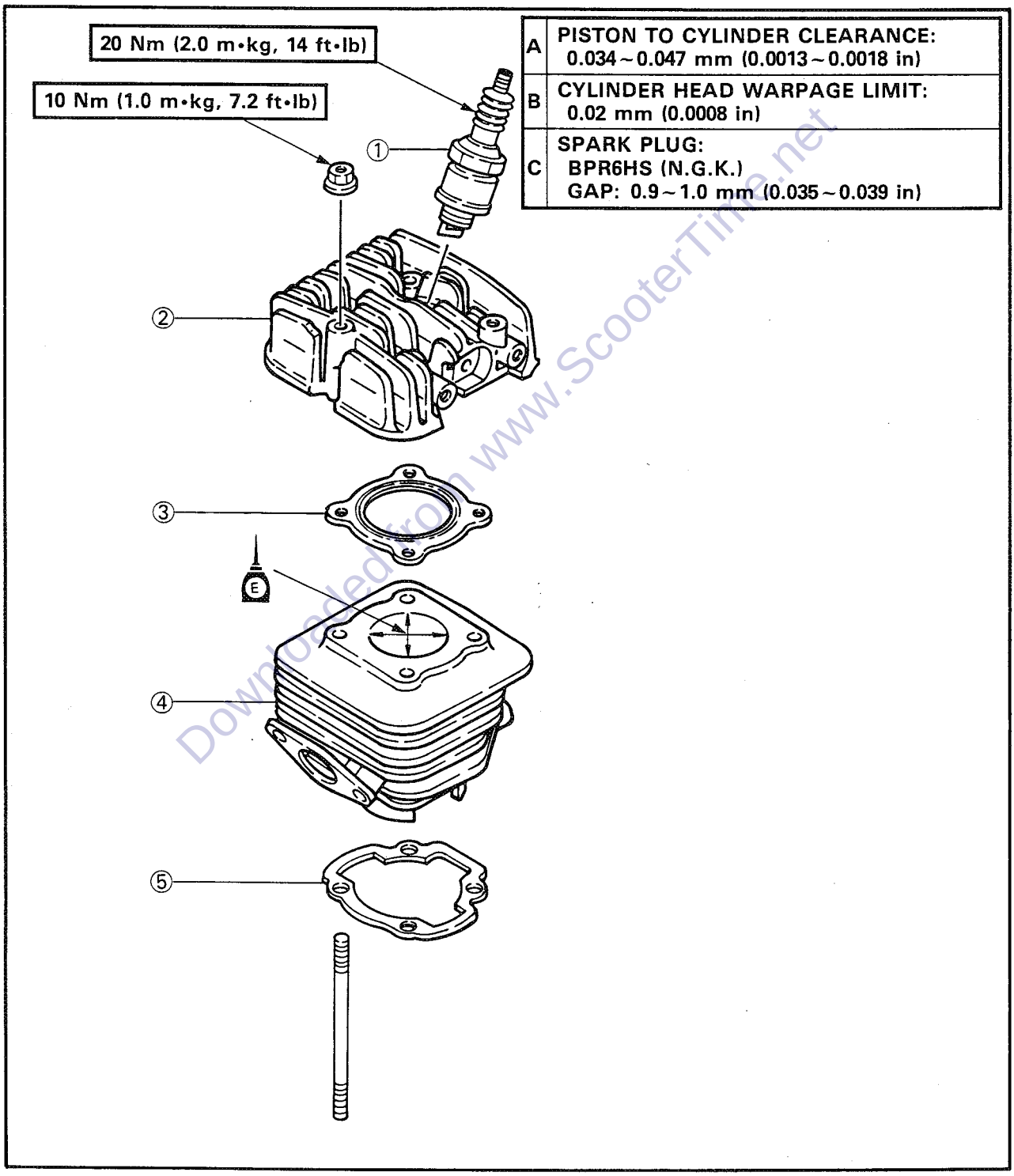

A	PISTON TO CYLINDER CLEARANCE: 0.034 ~ 0.047 mm (0.0013 ~ 0.0018 in)
B	CYLINDER HEAD WARPAGE LIMIT: 0.02 mm (0.0008 in)
C	SPARK PLUG: BPR6HS (N.G.K.) GAP: 0.9 ~ 1.0 mm (0.035 ~ 0.039 in)

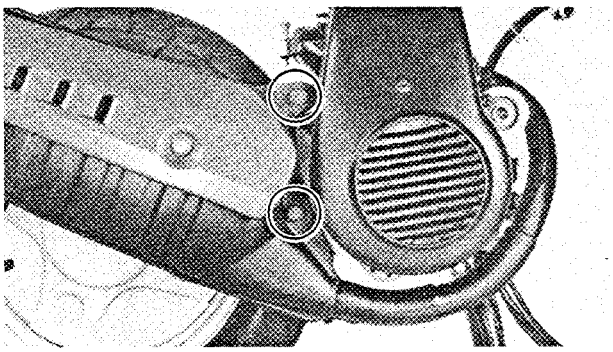

MUFFLER

1. Install:
   - Muffler

Bolt (Muffler):
27 Nm (2.7 m•kg, 19 ft•lb)
Bolt (Exhaust pipe):
8 Nm (0.8 m•kg, 5.8 ft•lb)

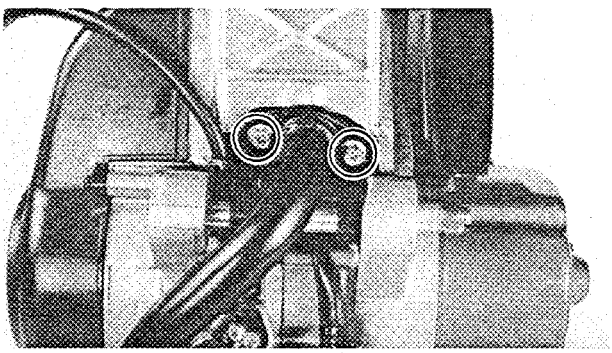

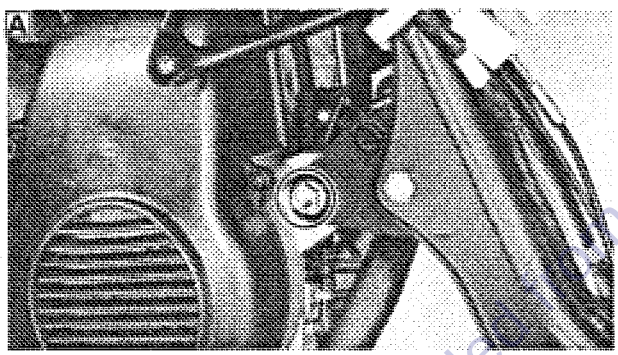

REMOUNTING ENGINE

When remounting the engine, reverse the removal procedure.

1. Install:
   - Engine mounting bolts
     These bolts should be temporarily secured.
2. Tighten:
   - Engine mounting bolts

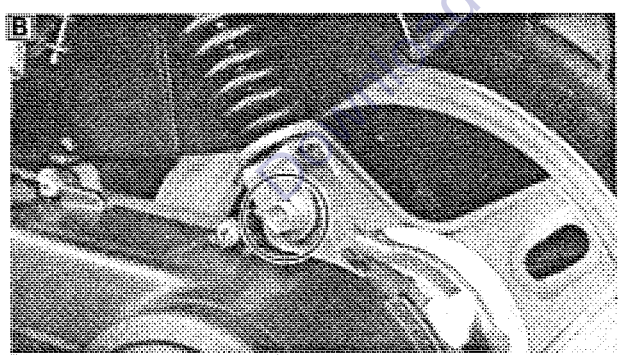

Bolt A :
42 Nm (4.2 m•kg, 30 ft•lb)
Bolt B :
17 Nm (1.7 m•kg, 12 ft•lb)

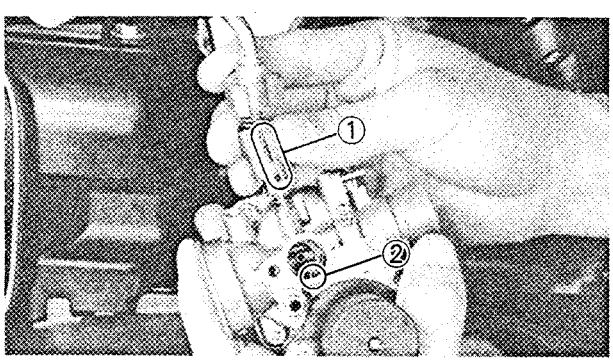

3. Install:
   - Carburetor
   - Carburetor top together with throttle valve

NOTE:

When installing the throttle valve into the carburetor, align the groove ① of the throttle valve with the projection ② of the carburetor.

4. Air bleeding:
   - Autolube pump
     Refer to "CHAPTER 2—AUTOLUBE PUMP AIR BLEEDING" section.
5. Apply:
   - Transmission oil
     Refer to "CHAPTER 2—TRANSMISSION OIL REPLACEMENT" section.
6. Adjust:
   - Brake lever free play
     Refer to "CHAPTER 2—BRAKE LEVER FREE PLAY ADJUSTMENT" section.
   - Autolube pump cable
     Refer to "CHAPTER 2—AUTOLUBE PUMP CABLE ADJUSTMENT" section.
   - Throttle cable free play
     Refer to "THROTTLE CABLE FREE PLAY ADJUSTMENT" section.

CHAPTER 4
CARBURETION

CARBURETION

AUTO CHOKE SYSTEM

CONSTITUENTS

The electric auto-choke consists of the Positive Temperature Coefficient (P.T.C.) thermistor, wax element and starter plunger.

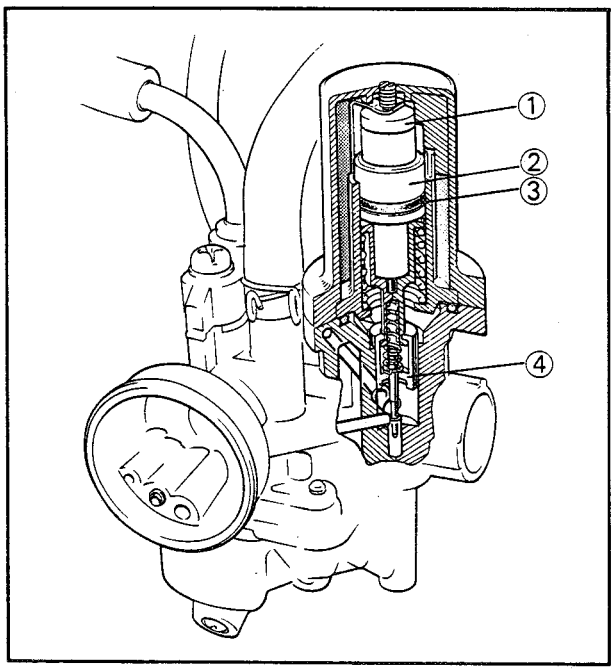

① P.T.C. thermistor
② Wax element
③ O-ring
④ Starter plunger

P.T.C. thermistor

When electric current flows in this thermistor, it begins to be heated up to a specified temperature. This specified temperature is then reained.

Wax element

The wax element changes its volume according to a varying temperature of the thermistor, thereby causing the starter plunger to operate.

Starter plunger

The starter plunger opens or closes the starter passage according to changes in the volume of the wax element.

WIRING SCHEMATIC

Power source is provided by the C.D.I. magneto lighting coil.

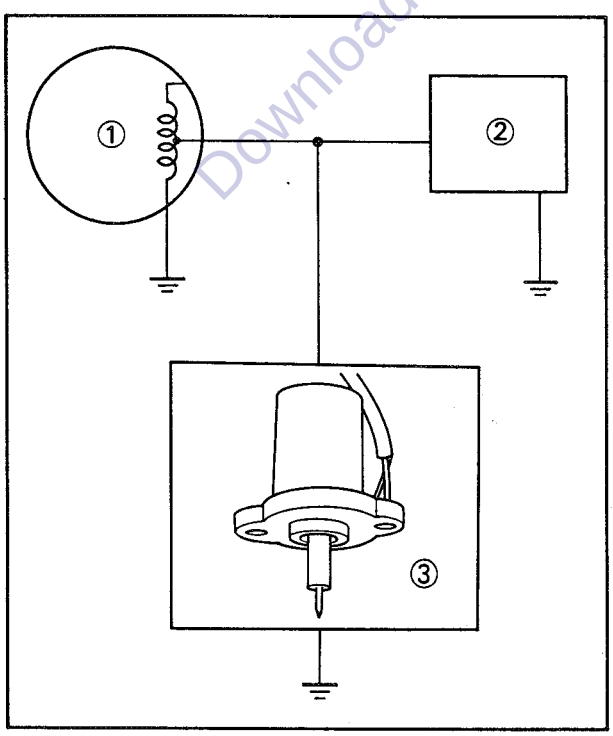

① C.D.I. magneto
② Rectifier/Regulator
③ Auto choke unit

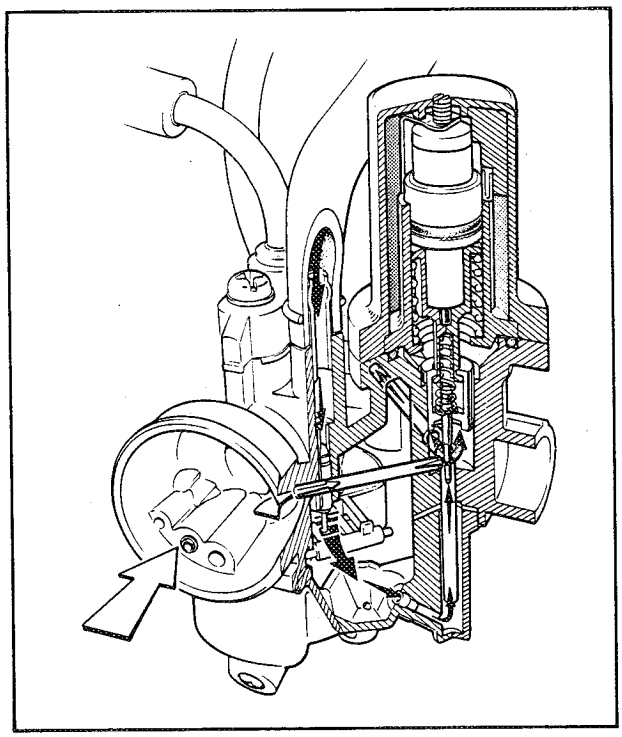

OPERATION

Cold engine

On the cold engine the wax element changes (reduces) its volume according to the ambient temperature.
In this state the starter plunger is at the top, thereby opening the starter plunger.

⇦ : Air
◀ : Fuel

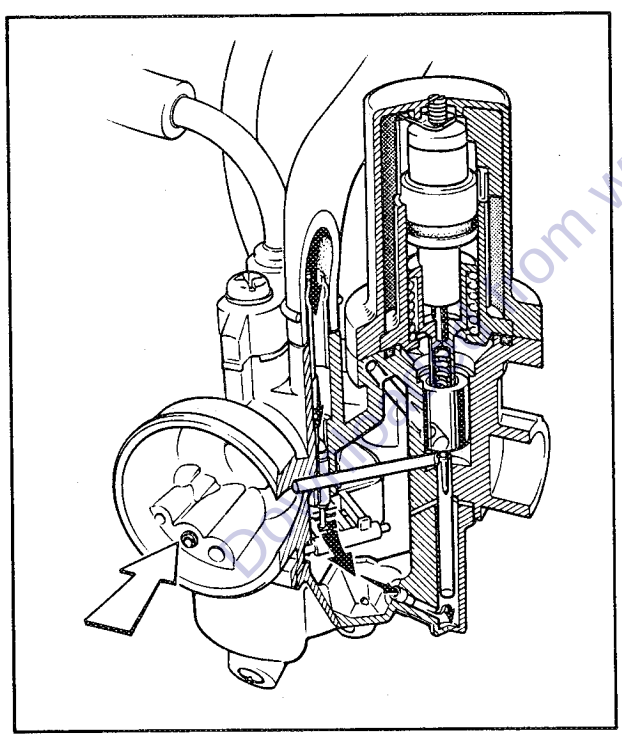

Running engine

When the engine is started, the heated P.T.C. thermistor expands the wax element, gradually pushing the starter plunger and controlling the opening of the starter passage. The further heated thermistor expands the wax element to a complete extent, thereby fully closing the starter passage.
This in turn causes the engine r.p.m. to change (be reduced) with time, finally coming to specified idling.
The wax element expands during the ride as well by means of the P.T.C. thermistor, thereby keeping the starter passage fully closed.

⇦ : Air
◀ : Fuel

AUTO CHOKE SYSTEM

Restarting after engine warm-up

1. Restarting right after ride:
   The wax element is fully expanded, so the starter passage is fully closed by the starter plunger.

2. Restarting after leaving engine for a particular time:
   The wax element begins to reduce its volume according to the ambient temperature, permitting the starter plunger to open the passage to meet the engine requirement.

CARBURETOR

① Spring
② Spring seat
③ Jet needle
④ Throttle valve
⑤ Throttle stop screw
⑥ Pilot air jet
⑦ Pilot jet
⑧ Main nozzle
⑨ Main jet
⑩ Needle valve
⑪ Float
⑫ Gasket
⑬ Float chamber
⑭ Drain screw
⑮ Auto choke unit
⑯ O-ring
⑰ Starter jet needle
⑱ Starter plunger

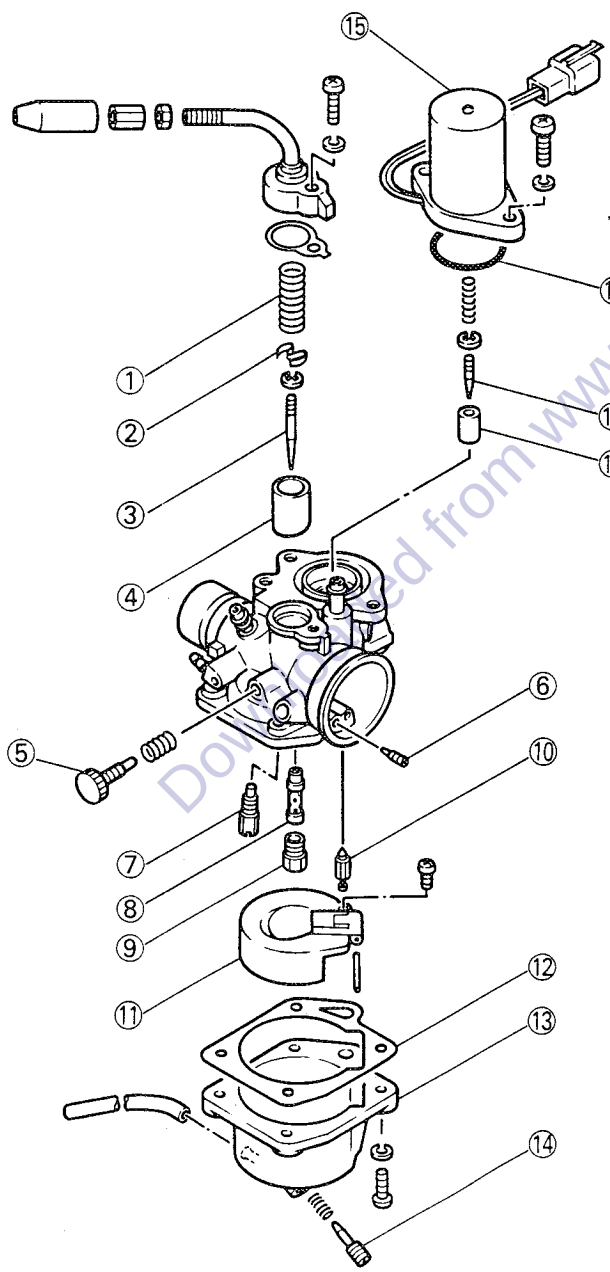

A	SPECIFICATIONS
MAIN JET	#82
JET NEEDLE	3S30-4/5
MAIN AIR JET	ϕ2.0
PILOT JET	#42
PILOT AIR JET	ϕ1.04
VALVE SEAT	ϕ1.5
FLOAT HEIGHT	15.0 ~ 17.0 mm (0.59 ~ 0.67 in)
ENGINE IDLE SPEED	1,500 ~ 2,100 r/min

CARBURETOR

SECTION VIEW

① Jet needle
② Throttle valve
③ Main nozzle
④ Main jet
⑤ Pilot air jet
⑥ Pilot jet
⑦ Auto choke unit
⑧ Starter plunger
⑨ Starter jet needle
⑩ Starter needle jet
⑪ Starter jet
⑫ Needle valve
⑬ Float

A Main metering system
B Slow metering system
C Starter metering system
D Fuel metering system
E Air
F Mixture
G Fuel

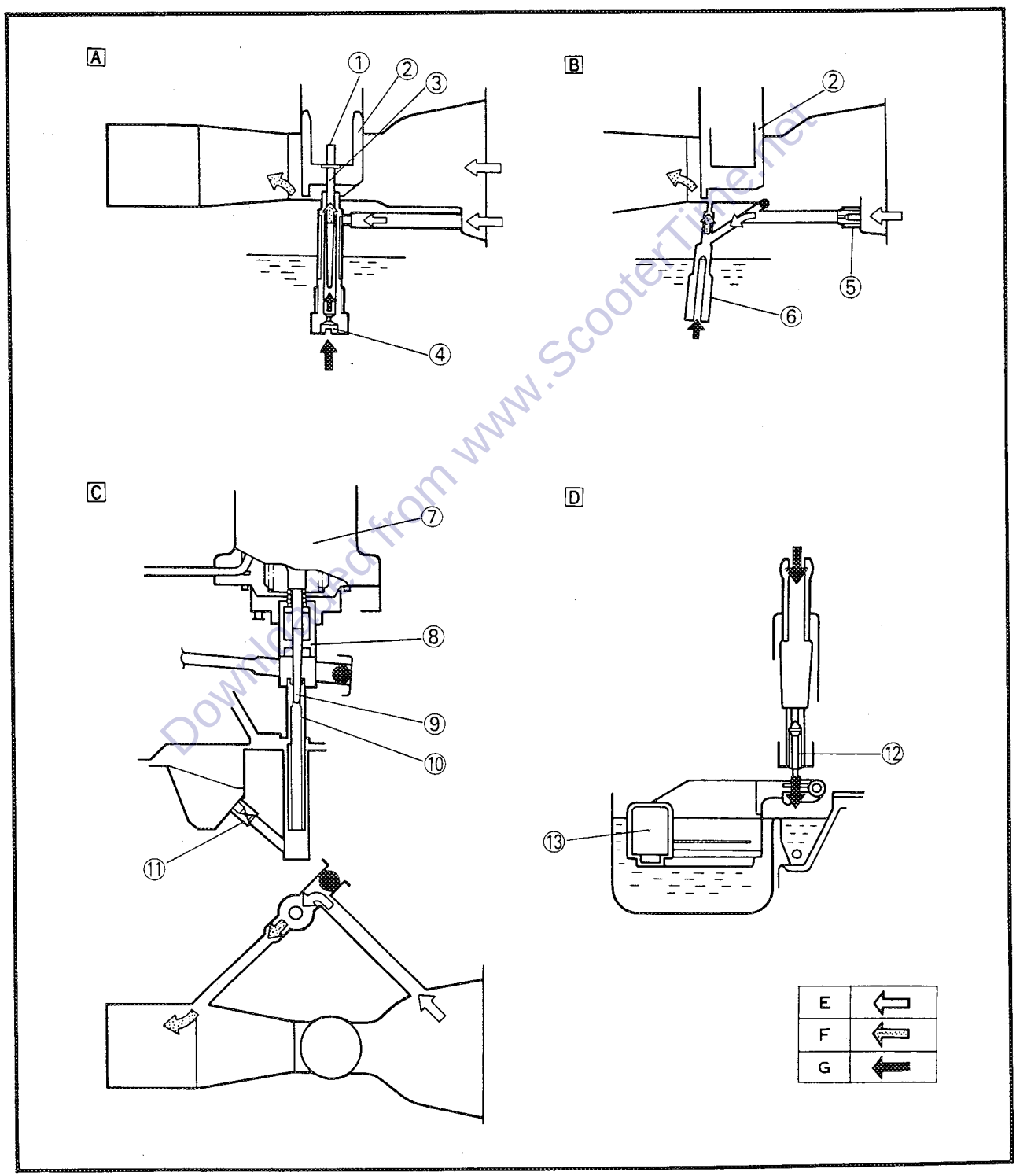

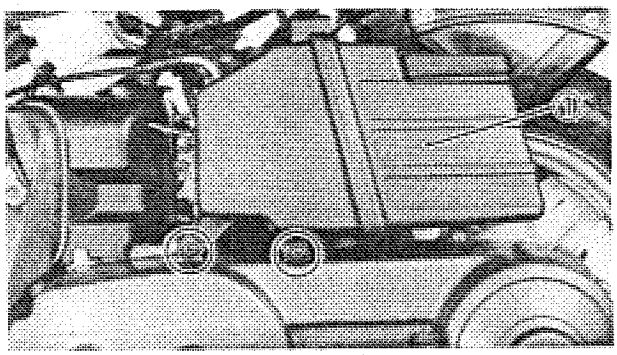

REMOVAL

1. Remove:
   - Tail cover
     Refer to "CHAPTER 2-TAIL COVER" section.
   - Air cleaner case ①

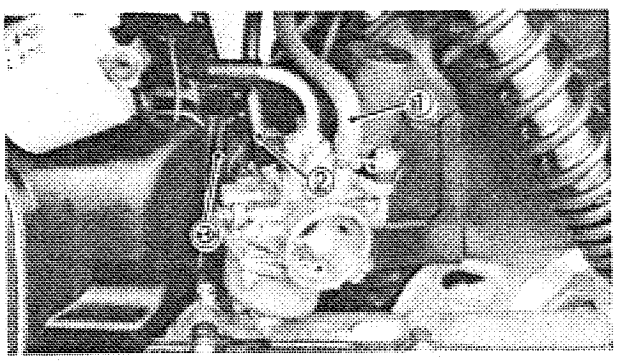

2. Disconnect:
   - Fuel pipe ①
   - Vacuum pipe ②
   - Oil delivery pipe ③

3. Remove:
   - Carburetor top ①

4. Remove:
   - Carburetor assembly

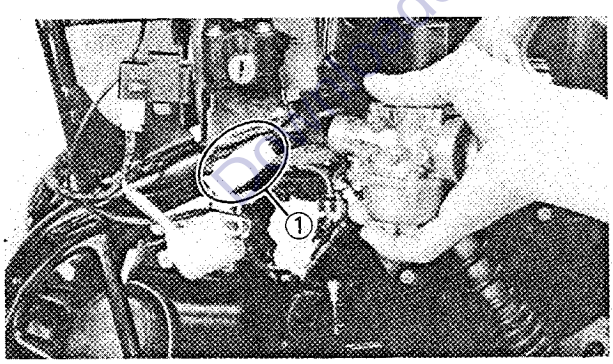

5. Disconnect:
   - Auto choke unit leads ①

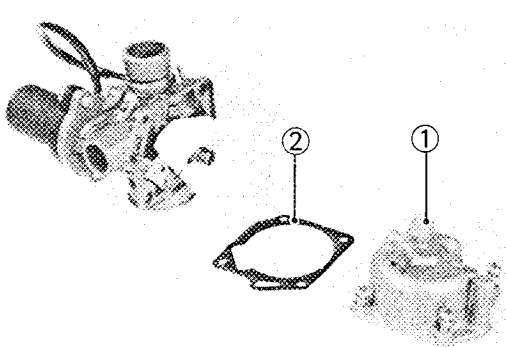

DISASSEMBLY

1. Remove:
   - Float chamber ①
   - Gasket ②

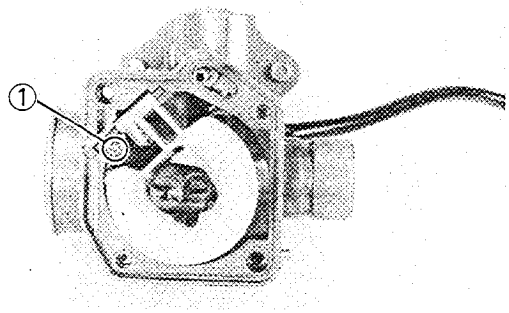

2. Remove.
   - Float pin stop screw ①
   - Float pin
   - Float
   - Needle valve

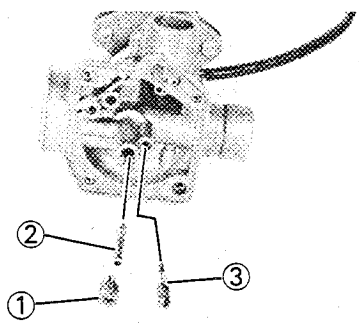

3. Remove:
   - Main jet ①
   - Main nozzle ②
   - Pilot jet ③

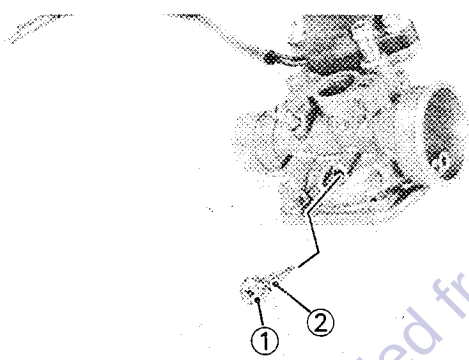

4. Remove:
   - Throttle stop screw ①
   - Spring ② (Throttle stop screw)

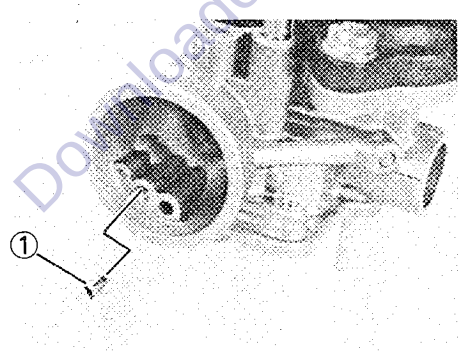

5. Remove:
   - Pilot air jet ①

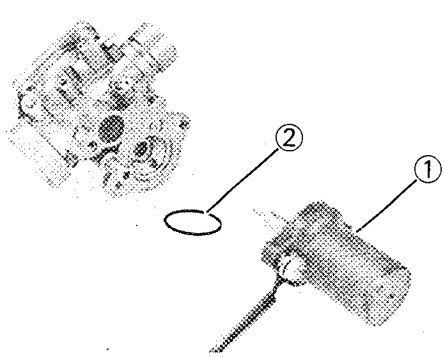

6. Remove:
   - Auto choke unit ①
   - O-ring ②

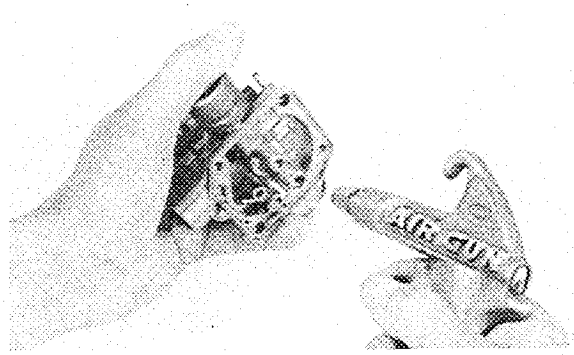

INSPECTION

1. Inspect:
   - Carburetor body
     Contamination→Clean.

NOTE:

Use a petroleum based solvent for cleaning. Blow out all passages and jets with compressed air.

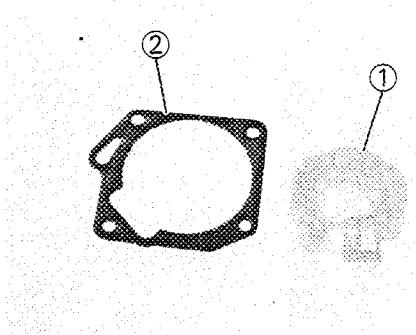

2. Inspect:
   - Float ①
     Damage→Replace.
   - Gasket ②
     Damage→Replace.

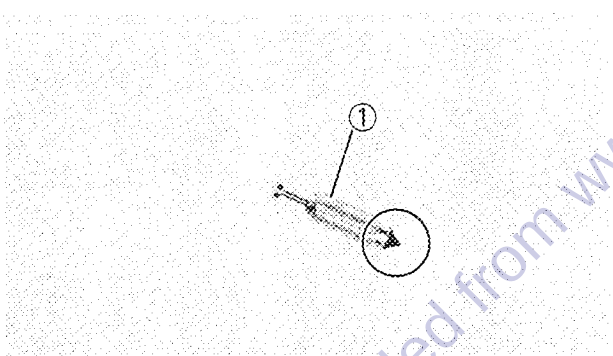

3. Inspect:
   - Needle valve ①
     Wear/Contamination→Replace.

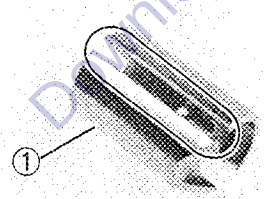

4. Inspect:
   - Throttle valve ①
     Wear/Damage→Replace.

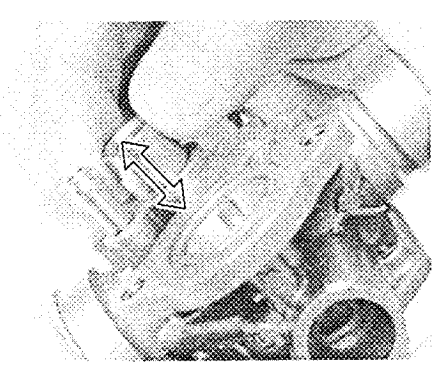

5. Check:
   - Free movement
     Stick→Replace.
     Insert the throttle valve into the carburetor body, and check for free movement.

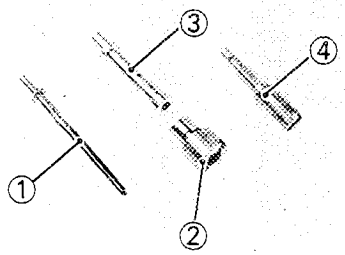

6. Inspect:
   - Jet needle ①
     Bends/Wear→Replace.
   - Main jet ②
   - Main nozzle ③
   - Pilot jet ④
     Contamination→Replace.

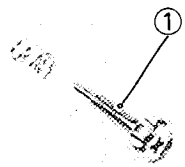

7. Inspect:
   - Throttle stop screw ①
     Wear/Damage→Replace.

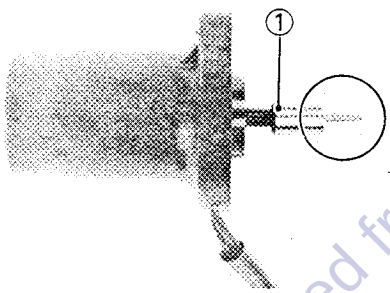

8. Inspect:
   - Starter plunger ①
     Wear/Damage→Replace.

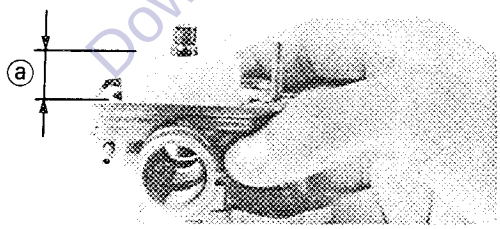

9. Measure:
   - Float height ⓐ
     Out of specification→Inspect needle valve, float and valve seat.

Float Height:
15.0～17.0 mm (0.59～0.67 in)

Float height measurement steps:
- Install the needle valve, float and float pin to the carburetor body.
- Hold the carburetor in an upside down position.

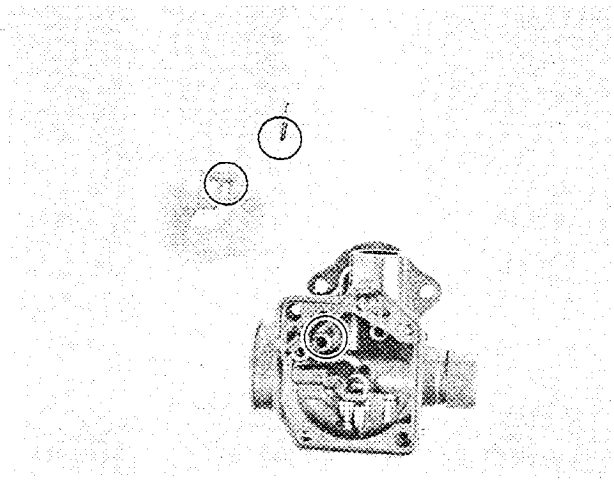

- Measure the distance between the mating surface of the float chamber (gasket removed) and top of the float using a gauge.

NOTE:

The float arm should be resting on the needle valve, but not compressing the needle valve.

- If the float height is not within specification, inspect the needle valve, float and ralve seat.
- If it is worn, replace it.

NOTE:

The float height is properly adjusted at the Yamaha factory. Never attempt to adjust it.

ASSEMBLY

To assemble the carburetor, reverse the disassembly procedures. Note the following points.

CAUTION:

- **Before reassembling, wash all parts in clean gasoline.**
- **Always use a new gasket.**

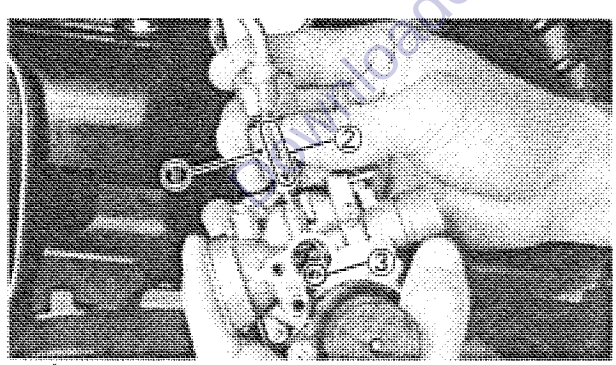

1. Install:
   - Throttle valve ①

NOTE:

Align the groove ② of the throttle valve with the projection ③ of the carburetor body.

INSTALLATION

1. Install:
   - Carburetor assembly

   Reserve the removal procedure.

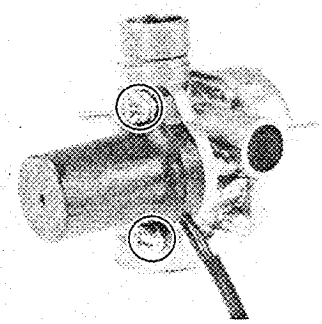

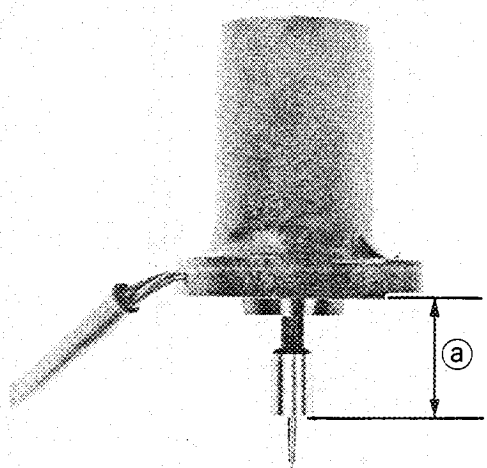

AUTO CHOKE UNIT CHECK

1. Remove:
   - Auto choke unit

2. Measure:
   - Starter plunger height ⓐ
     Plunger height will not change with the temperature change→Replace.

Plunger height measurement steps:

- Freeze auto choke unit to −5°C (23.5°F) in freezer.
- Measure plunger height at −5°C (23.5°F).
- Take auto choke unit out of freezer and after about 30 minutes, again measure plunger height at room temperature.
- If both measurements are the same, auto choke unit is defective. Replace it. For reference, below is a table of plunger heights at respective temperature.

Temperature	Plunger height
−5°C (23.5°F)	16.1±0.3 mm (0.63±0.01 in)
10°C (50.5°F)	17.8±0.3 mm (0.70±0.01 in)
20°C (68.5°F)	18.8±0.3 mm (0.74±0.01 in)
30°C (86.5°F)	19.7±0.3 mm (0.78±0.01 in)
40°C (104.5°F)	20.1±0.3 mm (0.79±0.01 in)

NOTE:

In the above table, auto choke was first freezed to −5°C (23.5°F) and then the measurements were made at while the temperature was raised gradualy.

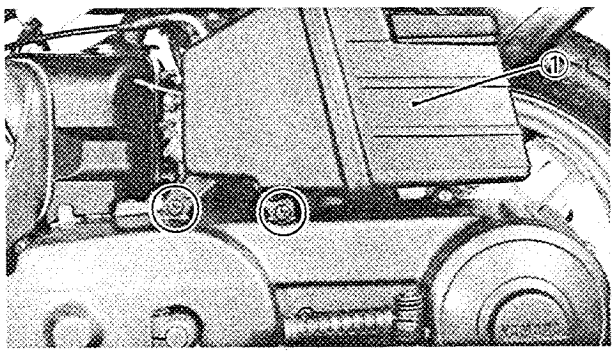

REED VALVE

REMOVAL

1. Remove:
   - Tail cover
     Refer to "CHAPTER 2-TAIL COVER" section.
   - Air cleaner case ①

2. Remove:
   - Carburetor
     Refer to "CARBURETOR-REMOVAL" section.

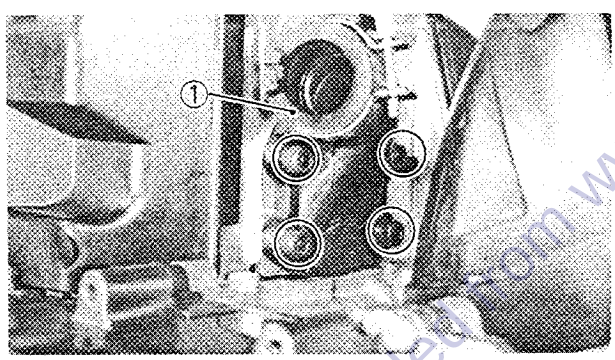

3. Remove:
   - Carburetor joint ①
   - Reed valve assembly

INSPECTION

1. Inspect:
   - Carburetor joint
     Damage/Cracks→Replace.
   - Reed valve
     Fatigue/Cracks→Replace.

Inspection steps:
- Visually inspect the reed valve.

NOTE:

Correct reed valve should fit flush or nearly flush against valve seat.

- If in doubt as to sealing ability, apply suction to carburetor side of assembly.
- Leakage should be slight to moderate.

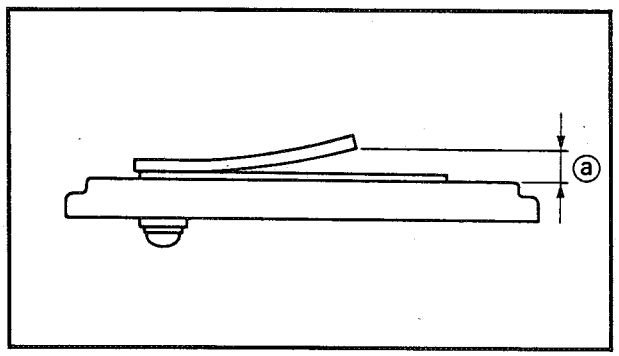

2. Measure:
- Valve stopper height ⓐ:
  Out of specification→Adjust stopper/ Replace valve stopper.

	Valve Stopper Height ⓐ: 3.0~3.4 mm (0.12~0.13 in)

NOTE:
If it is 0.4 mm (0.016 in) more or less than specified, replace the valve stopper.

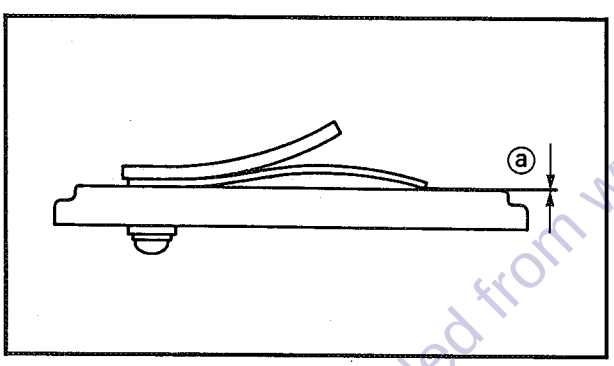

3. Measure:
- Reed valve clearance ⓐ
  Out of specification→Replace reed valve.

	Reed Valve Clearance ⓐ: Less than 0.2 mm (0.008 in)

INSTALLATION
When installing the reed valve assembly, reverse the removal procedure. Note the following points.

1. Install:
   - Gasket (New)

2. Tighten:
   - Reed valve securing bolts

	9 Nm (0.9 m•kg, 6.5 ft•lb)

NOTE:
Tighten each bolt gradually to avoid warping.

CHAPTER 5
CHASSIS

CHASSIS

FRONT WHEEL

① Collar
② Oil seal
③ Bearing
④ Spacer (Flange)
⑤ Spacer
⑥ Bearing
⑦ Speedometer drive gear
⑧ Brake shoe
⑨ Return spring
⑩ Dust seal
⑪ Brake camshaft
⑫ Camshaft seal
⑬ Brake shoe plate
⑭ Wear indicator
⑮ Camshaft lever
⑯ Stop ring
⑰ O-ring
⑱ Stop ring
⑲ Plain washer
⑳ Speedometer driven gear

A	TIRE SIZE: 2.75-10-4PR
B	RIM RUNOUT LIMIT: RADIAL: 2.0 mm (0.08 in) LATERAL: 2.0 mm (0.08 in)
C	BRAKE DRUM WEAR LIMIT: 80.5 mm (3.17 in)
D	BRAKE SHOE WEAR LIMIT: 2.0 mm (0.08 in)
E	WHEEL AXLE RUNOUT LIMIT: 0.25 mm (0.01 in)

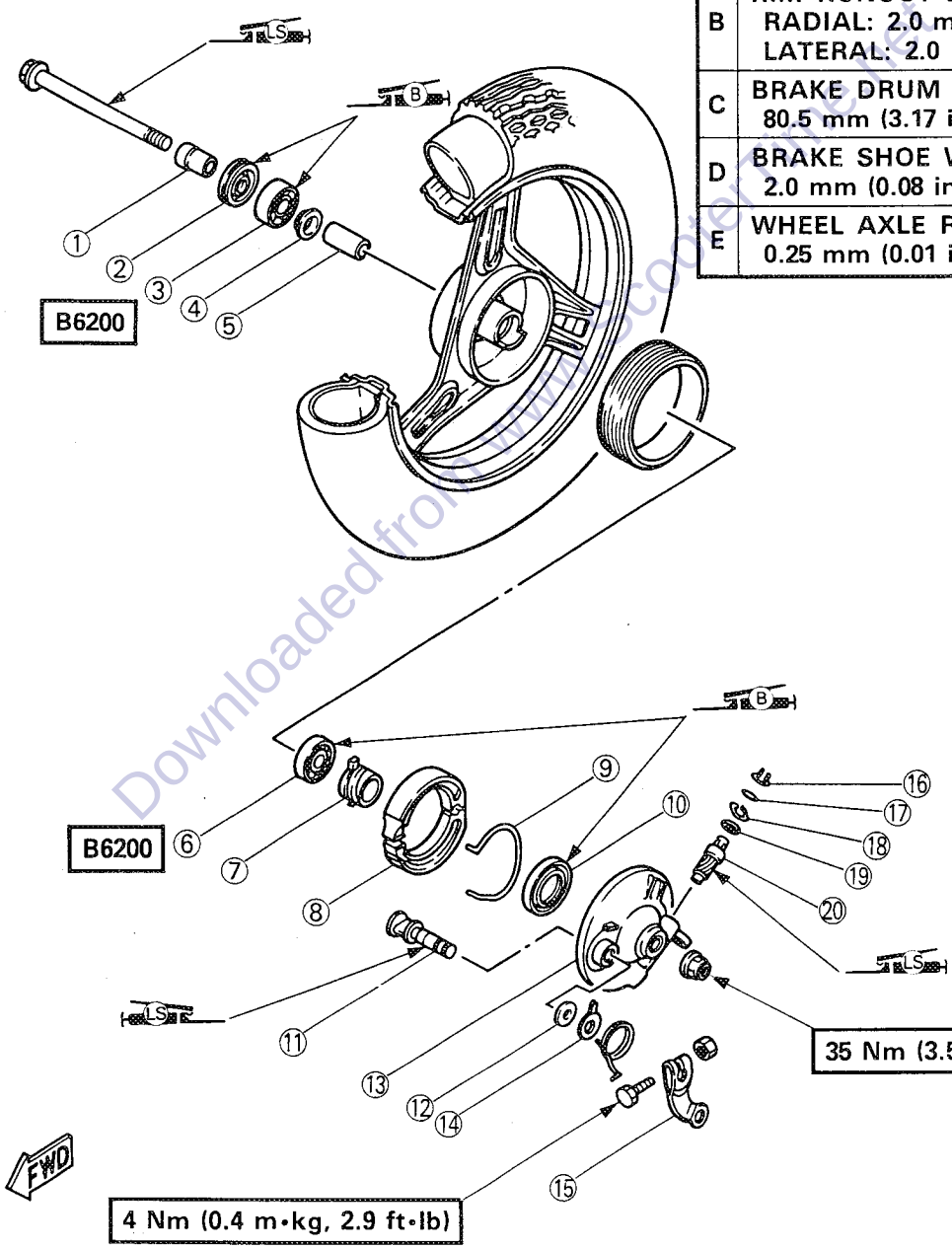

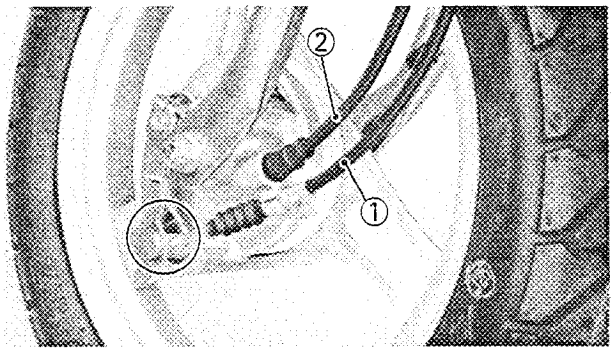

REMOVAL

1. Place the scooter on its centerstand.
2. Remove:
   - Brake cable ①
   - Speedometer cable ②

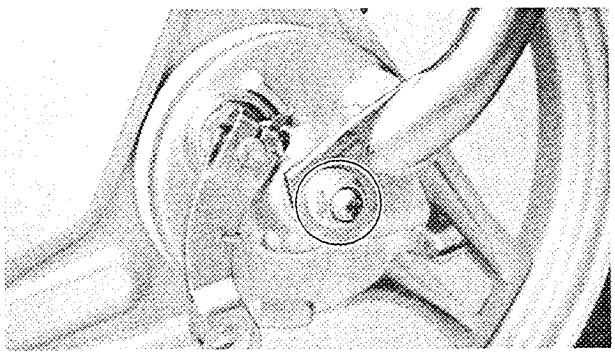

3. Remove:
   - Front wheel

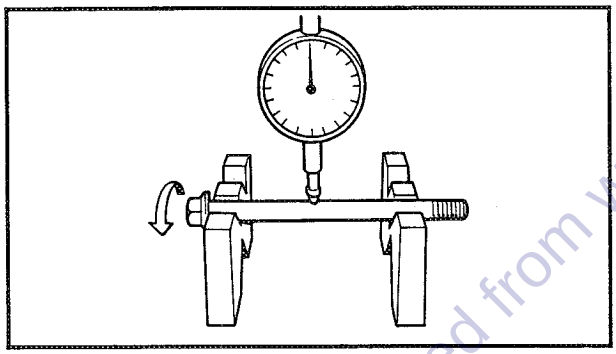

INSPECTION

1. Measure:
   - Wheel axle runout
   Out of specification→Replace.

Wheel Axle Runout Limit:
0.25 mm (0.01 in)

WARNING:

Do not attempt to straighten a bent axle.

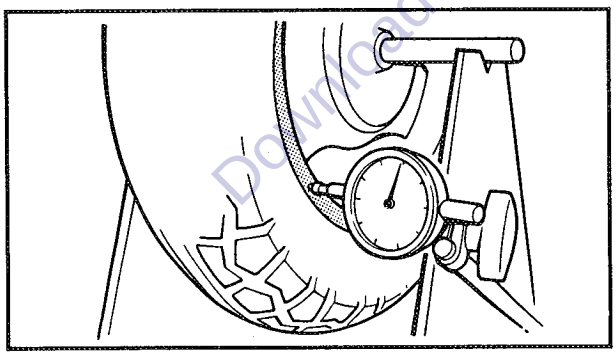

2. Measure:
   - Wheel runout
   Out of specification→Replace.

Runout Limit:
Radial 2.0 mm (0.08 in)
Lateral 2.0 mm (0.08 in)

3. Inspect:
   - Wheel
   Cracks/Bends/Warpage→Replace.

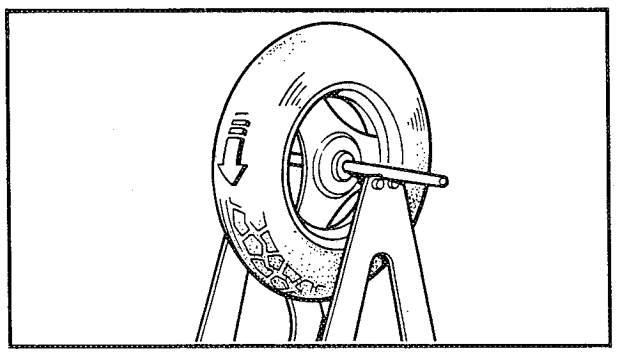

4. Inspect:
   - Wheel bearings
     Bearings allow play in the wheel hub or wheel turns roughly→Replace.

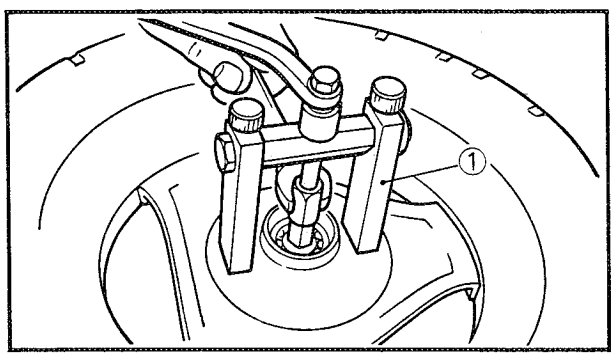

Wheel bearing replacement steps:
- Clean the outside of the wheel hub.
- Remove the bearing using a general bearing puller ①.
- Install the new bearing.

NOTE:
Use a socket ② that matches the outside diameter of the race of the bearing.

CAUTION:
Do not strike the inner race of balls of the bearing. Contact should be made only with the outer race.

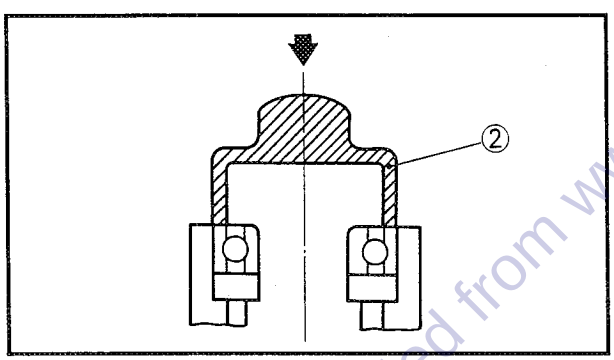

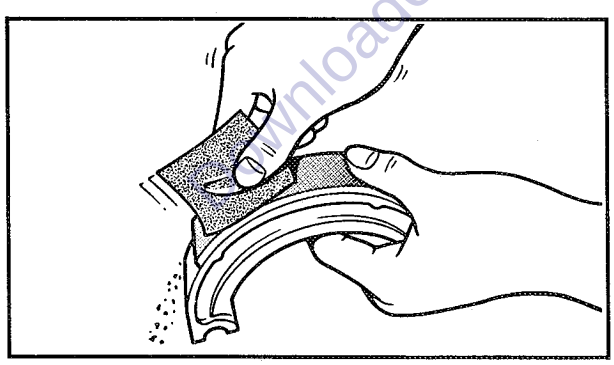

5. Inspect:
   - Brake shoes
     Glazed parts→Sand with coarse sandpaper.

NOTE:
After using the sand paper, clean of the polished particles with cloth.

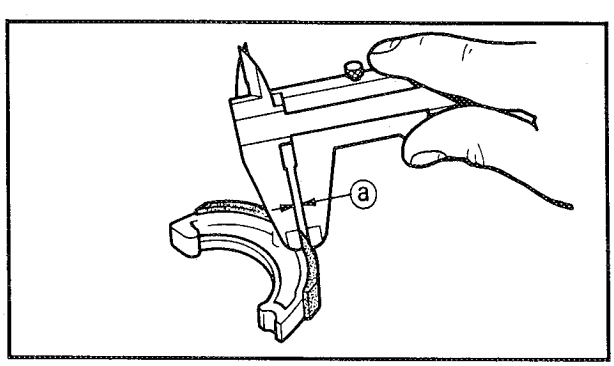

6. Measure:
   - Brake shoe thickness ⓐ
     Out of specification→Replace.

Brake Shoe Thickness:
S.T.D.: 3.5 mm (0.14 in)
Limit: 2.0 mm (0.08 in)

7. Inspect:
   - Brake drum inner surface
     Oil/Scratches→Remove.

Oil	Use a rag soaked in lacquer thinner or solvent.
Scratches	Use an emery cloth (lightly and evenly polishing).

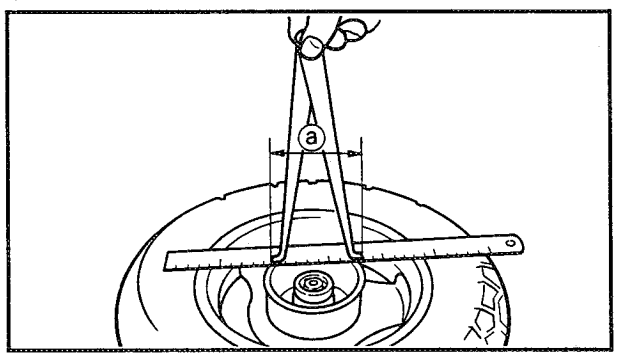

8. Measure:
   - Brake drum inside diameter ⓐ
     Out of specification→Replace.

Brake Drum Wear Limit:
80.5 mm (3.17 in)

ASSEMBLY (BRAKE SHOE PLATE)

When assembling the brake shoe plate, reverse the disassembly procedure.
Note the following points.

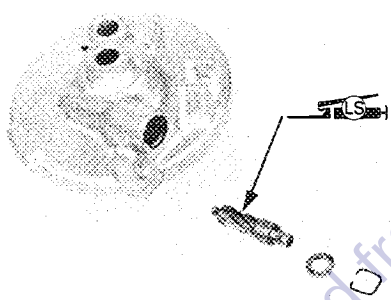

1. Apply:
   - Lithium-soap base grease
     (to speedometer driven gear)

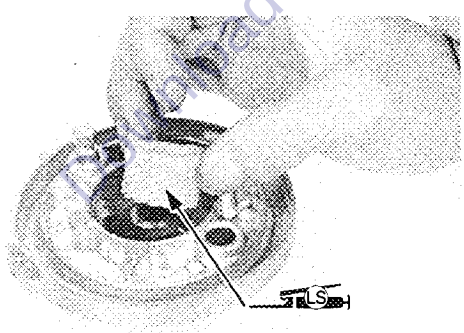

2. Apply:
   - Lithium-soap base grease
     (to speedometer drive gear)

3. Install:
   - Dust seal (New)

NOTE:

Install the dust seal with their manufacturer's marks or numbers facing outward.

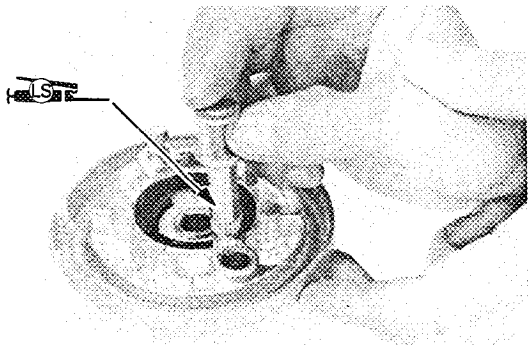

4. Apply:
   - Lithium-soap base grease (to the brake camshaft)

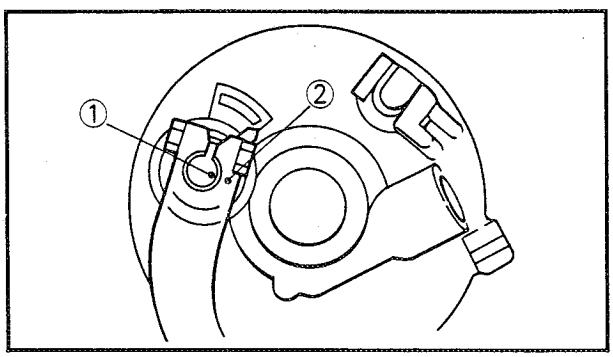

5. Install:
   - Brake camshaft
   - Camshaft lever

NOTE:

Align the camshaft mark ① with the lever mark ② as shown.

INSTALLATION

When installing the front wheel, reverse the removal procedure.
Note the following points.

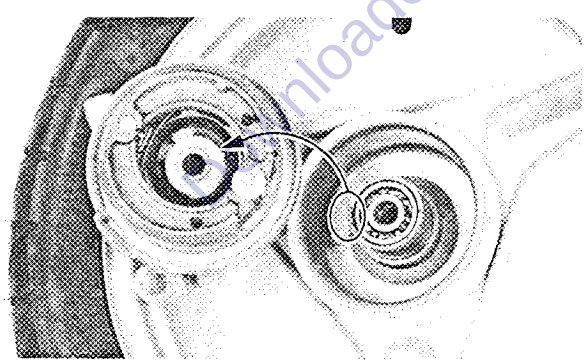

1. Install:
   - Brake shoe plate

NOTE:

Make sure the projections inside the gear unit are meshed with the flats in the wheel hub.

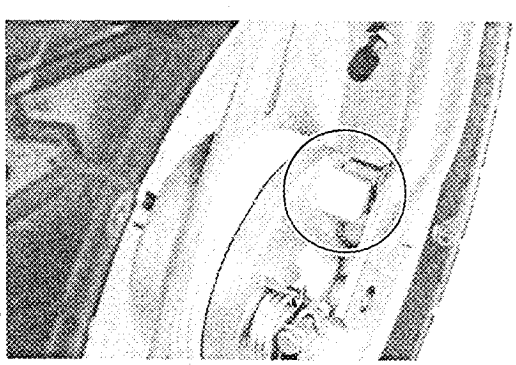

2. Install:
   - Front wheel

NOTE:

Be sure the boss on the front fork correctly engages with the locating slot on the brake shoe plate assembly.

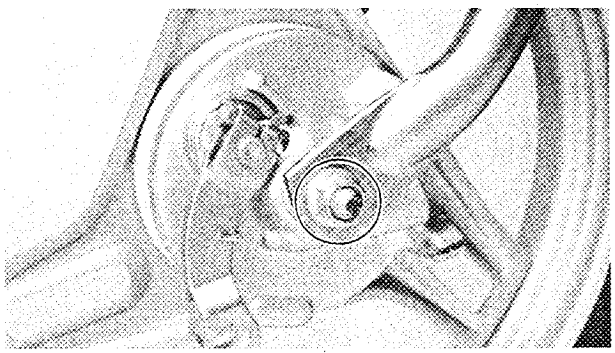

3. Tighten:
   - Axle nut

	35 Nm (3.5 m•kg, 25 ft•lb)

REAR WHEEL

① Wheel ring
② Plain washer
③ Spring
④ Brake shoes
⑤ Brake camshaft
⑥ Brake shoe plate
⑦ Camshaft seal
⑧ Wear indicator
⑨ Camshaft lever

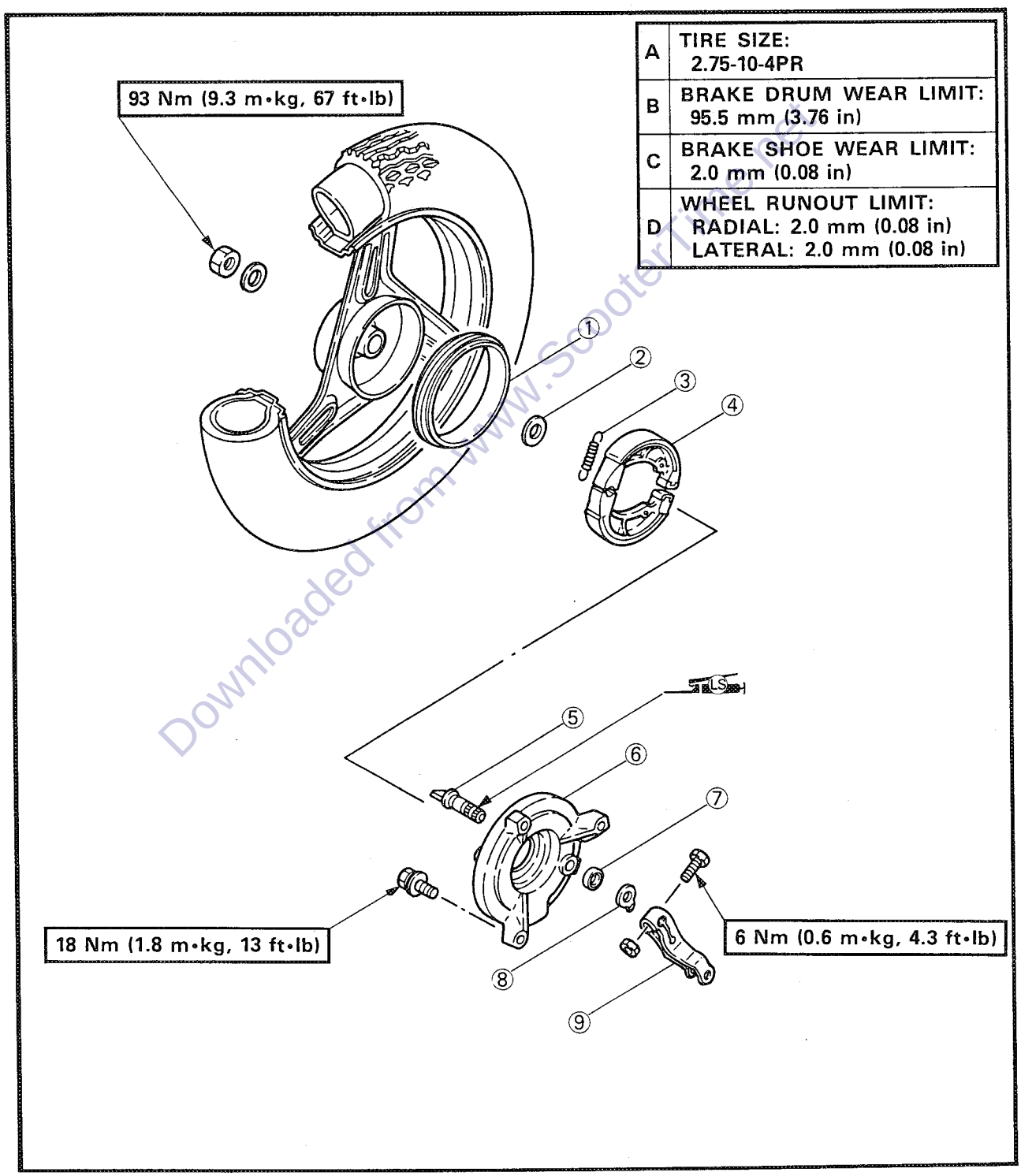

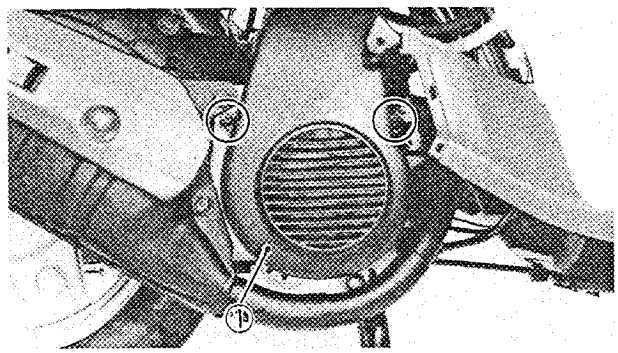

REMOVAL

1. Remove:
   - Tail cover
     Refer to "CHAPTER 2—TAIL COVER" section.

2. Remove:
   - Fan cover ①

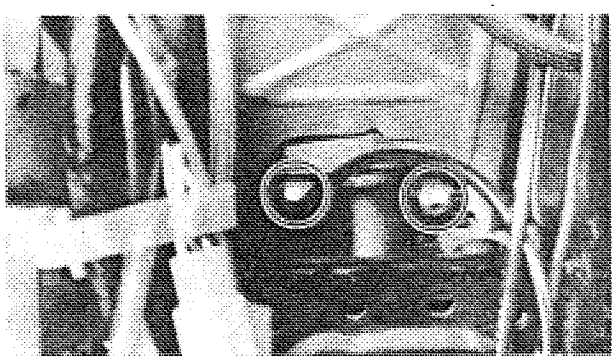

3. Remove:
   - Exhaust pipe
   - Muffler

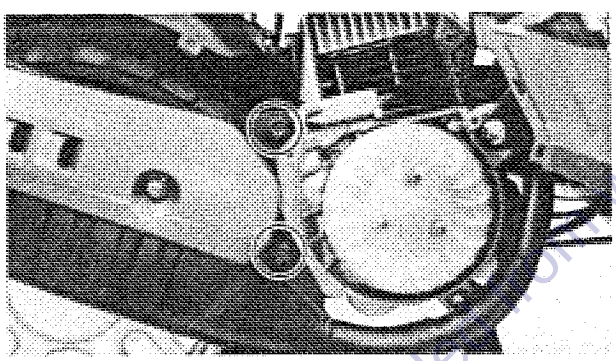

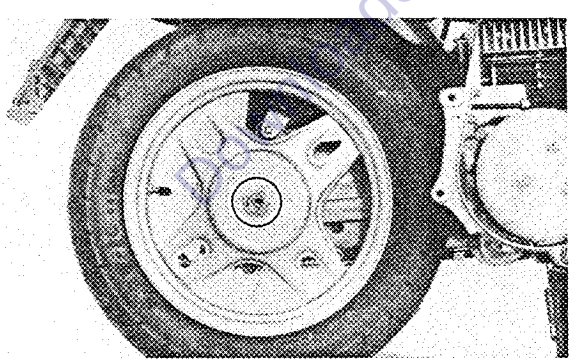

4. Remove:
   - Rear axle nut

NOTE:

When loosening axle nut, apply the rear brake.

5. Remove:
   - Rear wheel

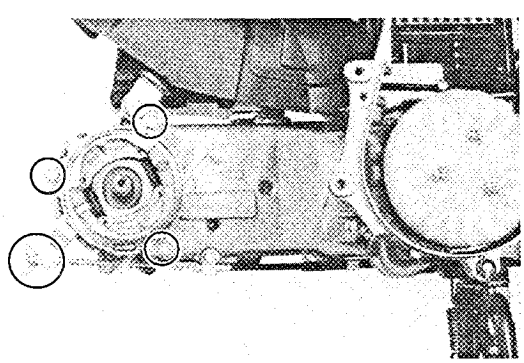

6. Remove:
   - Adjuster
   - Rear brake cable
   - Brake shoe plate

INSPECTION

1. Inspect:
   - Wheel
     Cracks/Bends/Warpage→Replace.

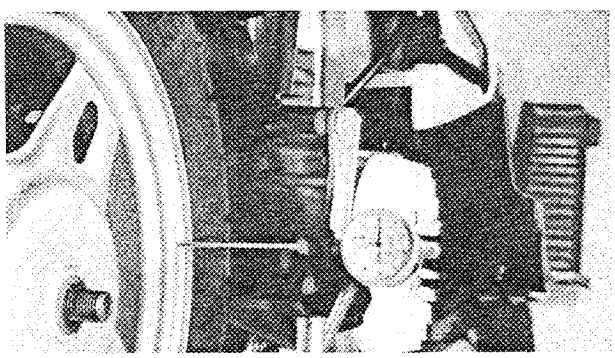

2. Measure:
   - Wheel runout
     Out of specification→Replace.

Runout Limit:
Radial 2.0 mm (0.08 in)
Lateral 2.0 mm (0.08 in)

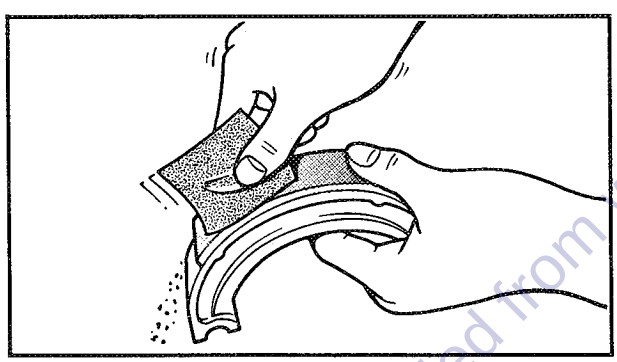

3. Inspect:
   - Brake shoes
     Glazed parts→Sand with coarse sandpaper.

NOTE:
After using the sand paper, clean of the polished particles with cloth.

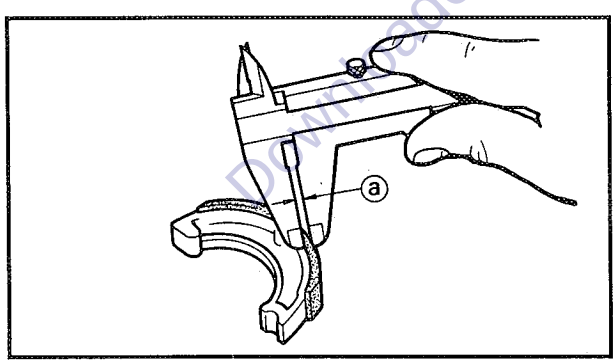

4. Measure:
   - Brake shoe thickness ⓐ
     Out of specification→Replace.

Brake Shoe Thickness:
S.T.D.: 3.0 mm (0.12 in)
Limit: 2.0 mm (0.08 in)

5. Inspect:
   - Brake drum inner surface
     Oil/Scratches→Remove.

Oil	Use a rag soaked in lacquer thinner or solvent.
Scratches	Use an emery cloth (lightly and evenly polishing).

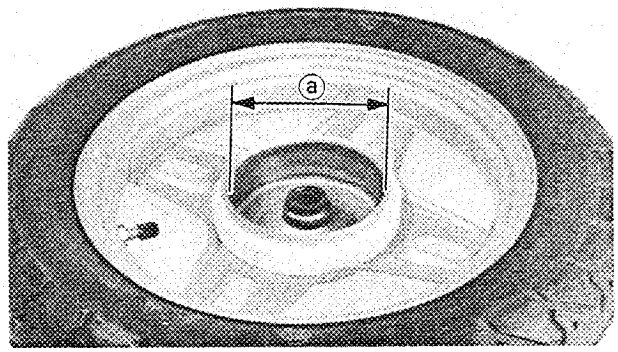

6. Measure:
   - Brake drum inside diameter ⓐ
     Out of specification→Replace.

Brake Drum Wear Limit: 95.5 mm (3.76 in)

ASSEMBLY (BRAKE SHOE PLATE)

When assemblying the brake shoe plate, reverse the disassembly procedure.
Note the following points.

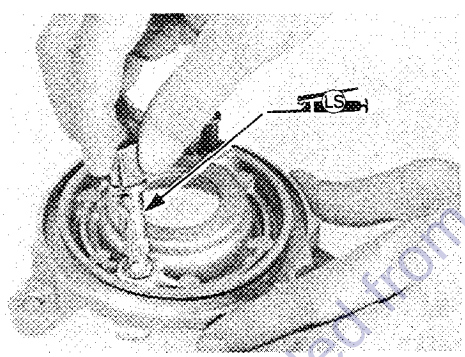

1. Apply:
   - Lithium-soap base grease
     (to the brake camshaft)

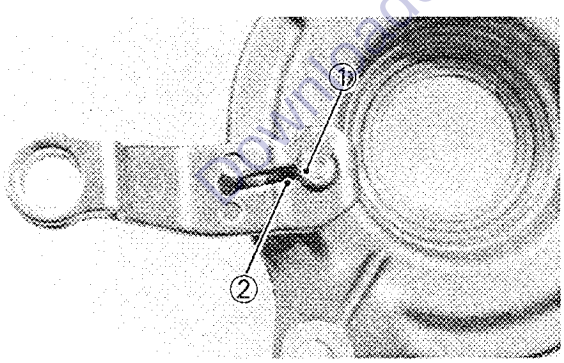

2. Install:
   - Brake camshaft
   - Camshaft lever

NOTE:

Align the camshaft mark ① with the lever mark ②.

INSTALLATION

When installing the rear wheel, reverse the removal procedure.
Note the following points.

1. Install:
   - Brake shoe plate

18 Nm (1.8 m•kg, 13 ft•lb)

2. Install:
   - Rear wheel

	93 Nm (9.3 m•kg, 67 ft•lb)

NOTE:

Make sure the splines on the wheel hub fit the rear drive axle.

3. Install:
   - Muffler
   - Exhaust pipe

	Muffler: **18 Nm (1.8 m•kg, 13 ft•lb)** **Exhaust pipe:** **8 Nm (0.8 m•kg, 5.8 ft•lb)**

FRONT FORK AND STEERING

① Handlebar
② Flange bolt
③ Frange nut
④ Ring nut
⑤ Washer
⑥ Upper bearing race (Top)
⑦ Bearings
⑧ Upper bearing race (Bottom)
⑨ Lower bearing race (Top)
⑩ Lower bearing race (Bottom)
⑪ Steering column
⑫ Front fork spring
⑬ Rubber (Left side only)
⑭ Spring seat
⑮ Inner tube (Right and left)

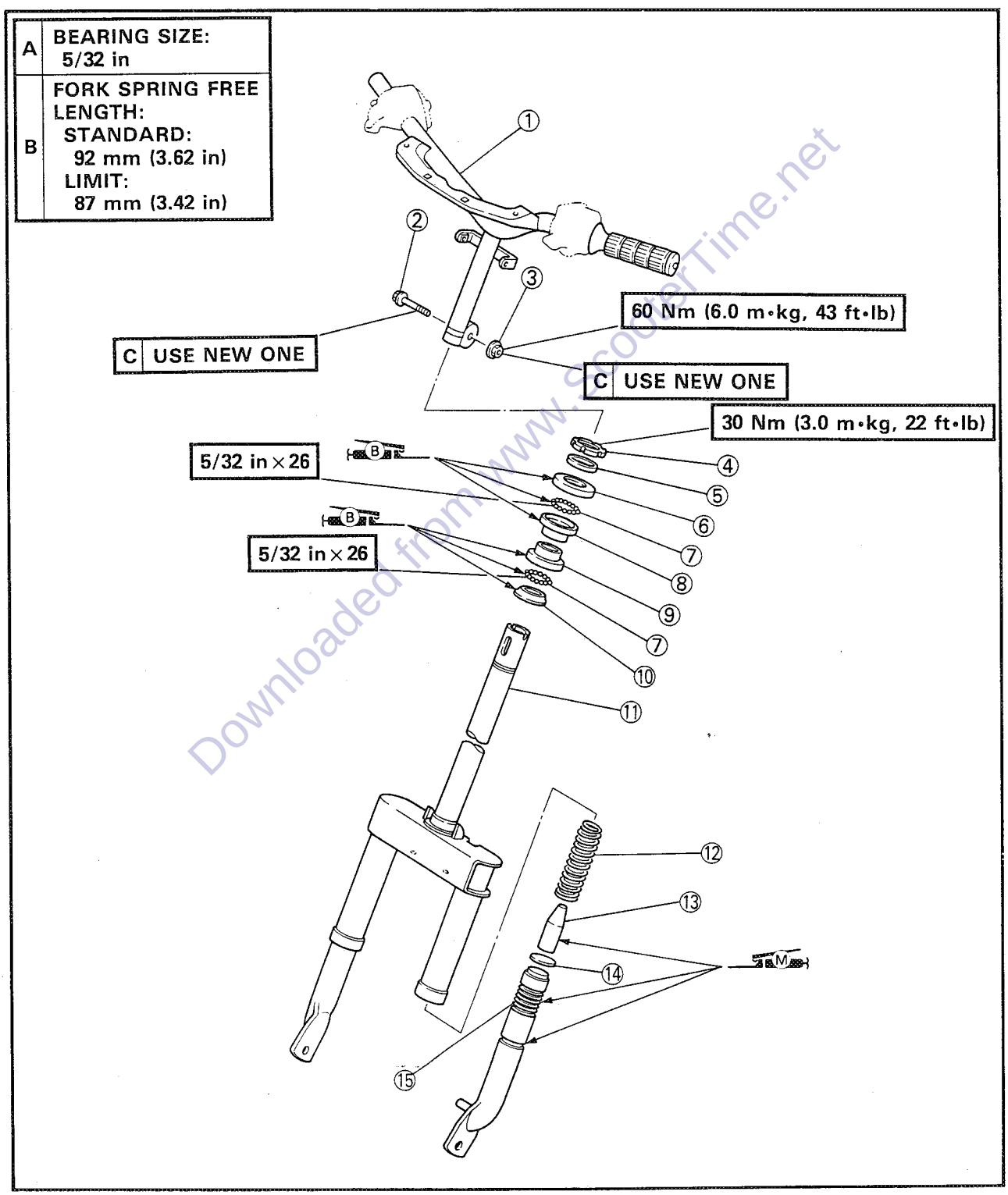

REMOVAL

1. Place the scooter on the centerstand.

WARNING:

Securely support the scooter so there is no danger of it falling over.

2. Remove:
   - Front wheel
   Refer to "FRONT WHEEL—REMOVAL" section.
3. Remove:
   - Front fender
   - Front panel
   Refer to "CHAPTER 2 — FRONT FENDER, FRONT PANEL AND FOOTREST BOARD" section.
4. Remove:
   - Handlebar cover
   Refer to "CHAPTER 2 — HANDLEBAR COVER" section.
5. Remove:
   - Front brake cable ①
   - Rear brake cable ②

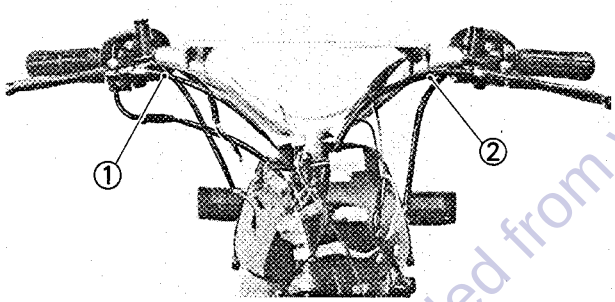

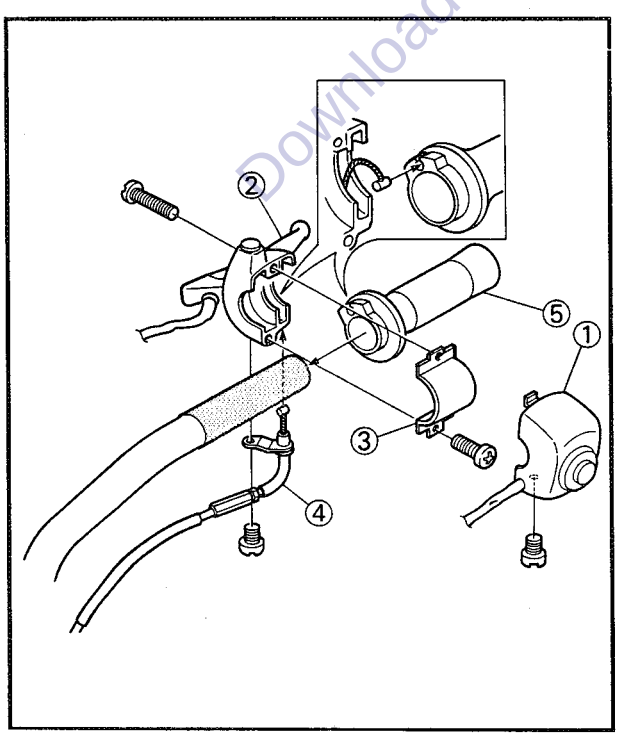

6. Remove:
   - Handlebar switch (Right) ①
   - Front brake lever assembly ②
   - Bracket ③
   - Throttle cable ④
   - Throttle grip ⑤

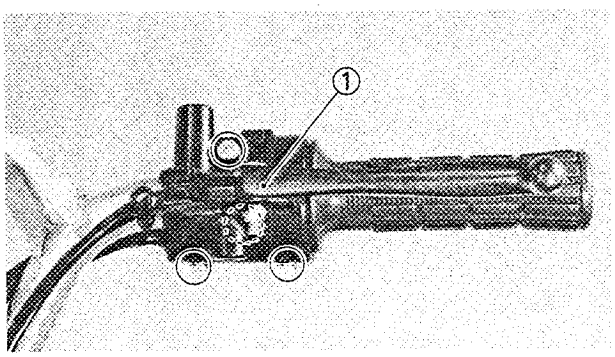

7. Remove:
   - Rear brake lever assembly ①

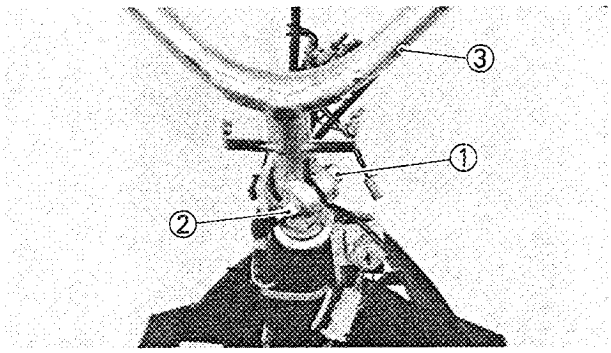

8. Remove:
   - Bolt ①
   - Nut ②
   - Handlebar ③

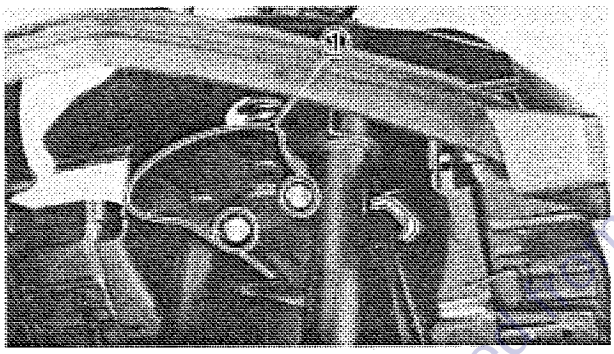

9. Remove:
   - Inner fender with cable guide ①

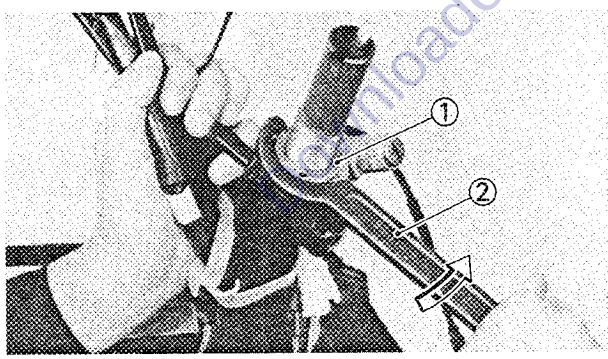

10. Remove:
    - Ring nut ①
      Using the Ring Nut Wrench ② (YU-01268).

NOTE:

Support the steering column so that it may not fall down.

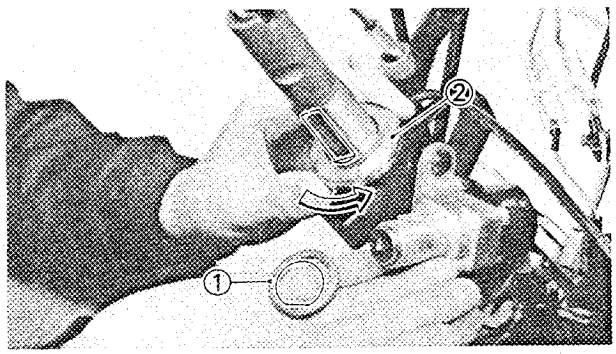

11. Remove:
    - Washer ①
    - Upper bearing race (Top) ②
      Turn it counterclockwise.
    - Steering column
    - Bearings

NOTE:

Take care not to lose the bearings. (Upper: 26 pieces, Lower: 26 pieces)

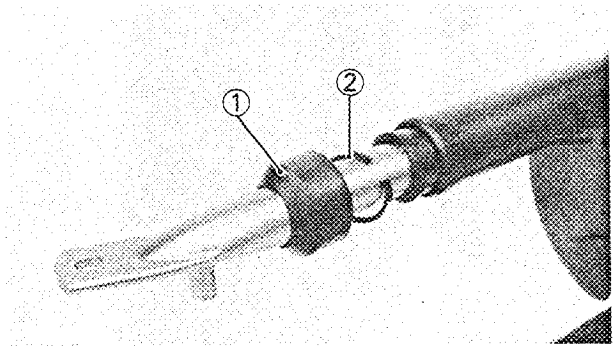

DISASSEMBLY

1. Remove:
   - Dust seal ①
   - Circlip ②

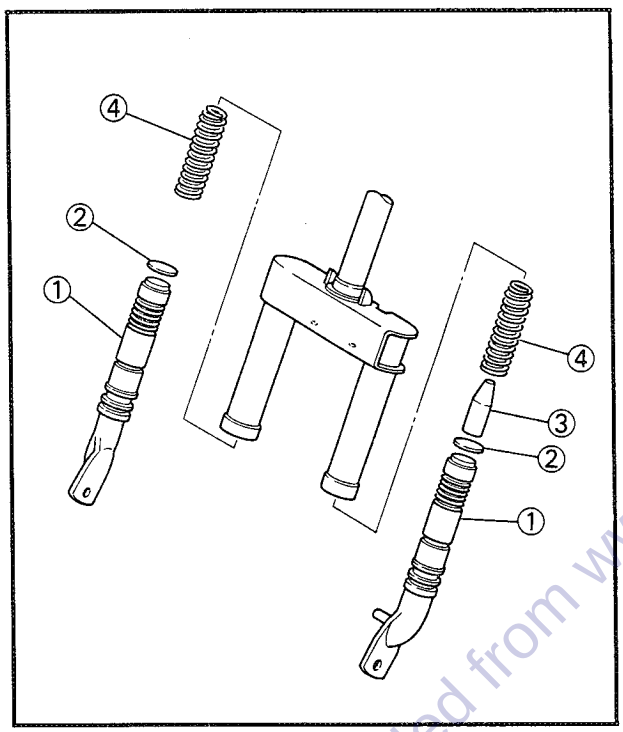

2. Remove:
   - Inner tube (Left and right) ①
   - Spring seat ②
   - Rubber ③ (Left side only)
   - Front fork spring ④

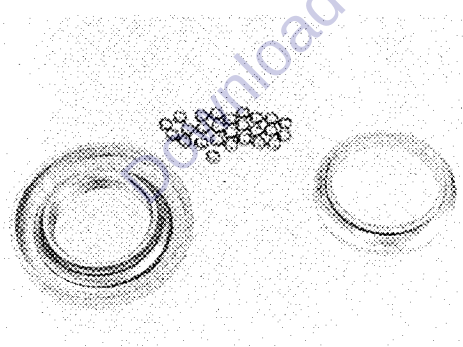

INSPECTION

1. Wash the bearings in solvent.
2. Inspect:
   - Bearing races
     Pitting/Damage→Replace.
   - Bearings
     Pitting/Damage→Replace.

NOTE:

Always replace the bearing and race as a set.

Bearing Size:
Upper: 5/32 in
Lower: 5/32 in
Bearing Quantity:
Upper: 26 pcs.
Lower: 26 pcs.

Bearing race replacement steps:
- Remove the bearing race by hitting it on several points.
- Set the bearing race.
- Drive in the bearing race evenly by hitting it on several points.

CAUTION:

- **Unless the ball race is installed evenly, it will damage the frame or steering column.**
- **Do not hit the face of the ball race.**

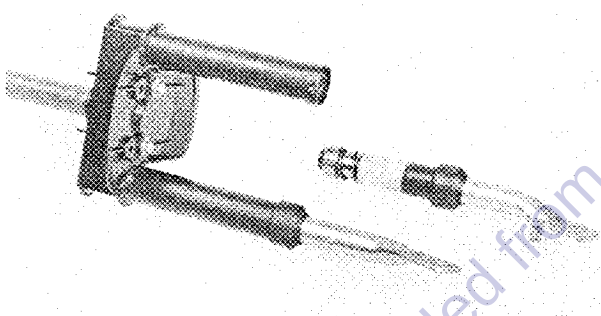

3. Inspect:
   - Steering column
   - Inner fork tube
     Bends/Damage→Replace.

WARNING:

Do not attempt to straighten a bent fork tube.

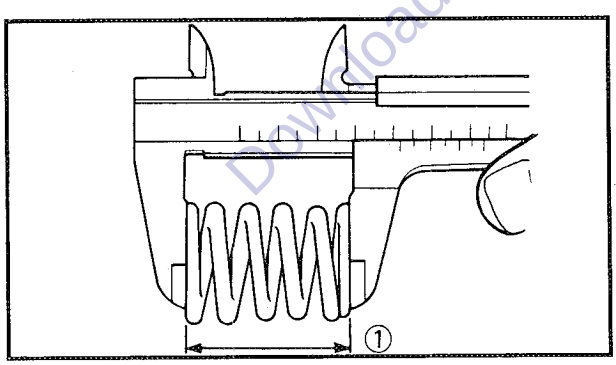

4. Measure:
   - Fork spring free length
     Out of specification→Replace.

Fork Spring Free Length ①:
Standard: 92 mm (3.62 in)
Limit: 87 mm (3.42 in)

ASSEMBLY AND INSTALLATION

Reverse the disassembly and removal steps. Note the following points.

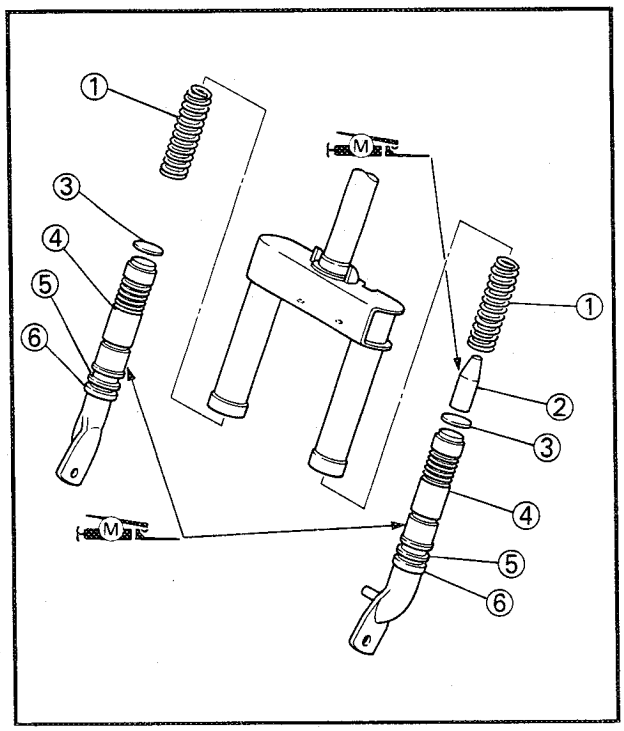

1. Apply:
   - Molybdenum disulfide grease
     To inner tube ③ and rubber ⑤.
2. Install:
   - Front fork spring ①
   - Rubber ② (Left side only)
   - Spring seat ③
   - Inner tube ④
   - Circlip ⑤
   - Oil seal ⑥

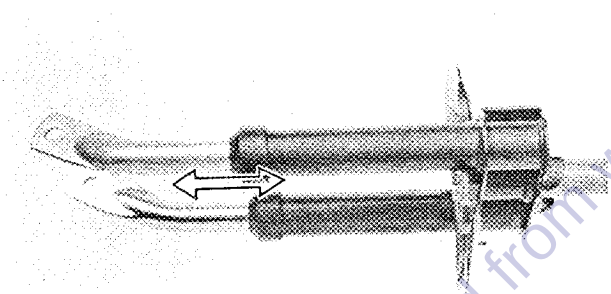

3. Check:
   - Front fork operation
     Unsmooth operation→Repair.

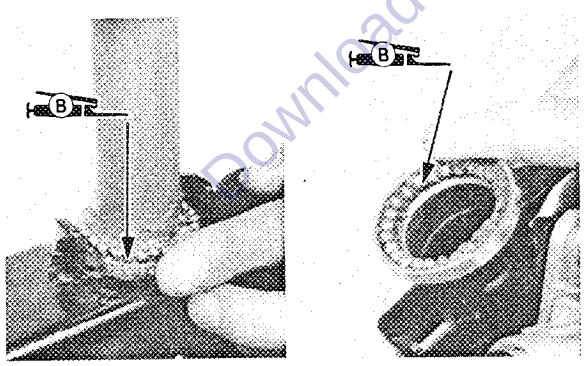

4. Apply:
   - Wheel bearing grease
     To upper bearings and lower bearings.

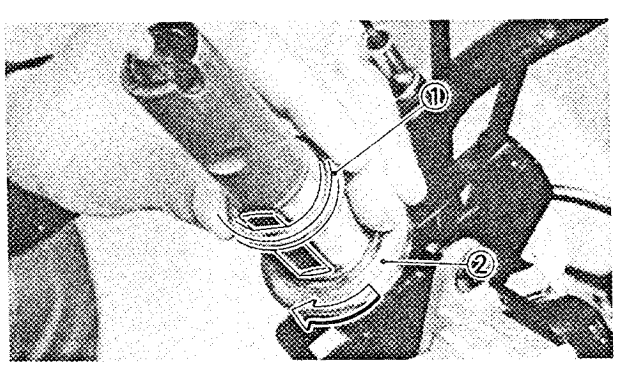

5. Install:
   - Steering column
   - Upper bearing race (Top) ①
     Turn it clockwise completely.
   - Washer ②
   - Ring nut

CAUTION:

Hold the steering column until it is secured.

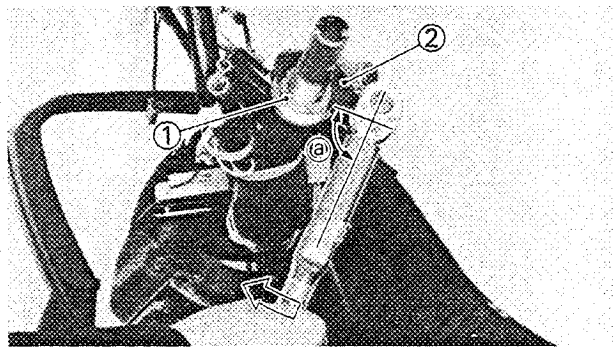

6. Tighten:
   - Ring nut ①
     Using the Ring Nut Wrench ② (YU-33975).

	Ring Nut ①: **30 Nm (3.0 m•kg, 22 ft•lb)**

NOTE:

Set the torque wrench to the Ring Nut Wrench so that they form a right angle ⓐ.

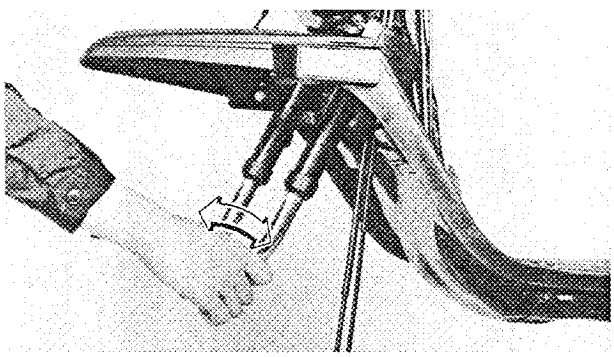

7. Check:
   - Steering column for smooth action
     Slack→Tighten the ring nut.
     Sticky→Loosen the ring nut.

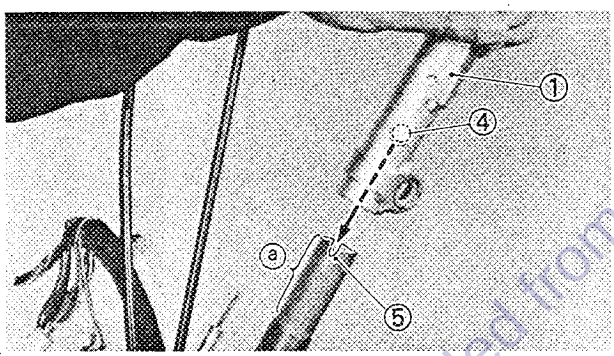

8. Install:
   - Handlebar ①
   - Bolt ② (New)
   - Nut ③ (New)

NOTE:

Fit the handlebar bridge ④ into the steering column notcher ⑤.

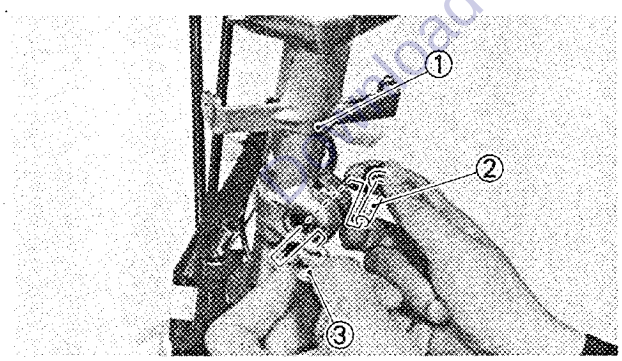

CAUTION:

- **Before installing the handlebar, wipe the oil off the insertion portion ⓐ using thinner, etc.**
- **Install the bolt ② from the right as shown.**
- **Make sure that the slit ⓑ has enough clearance after tightening the nut ③.**

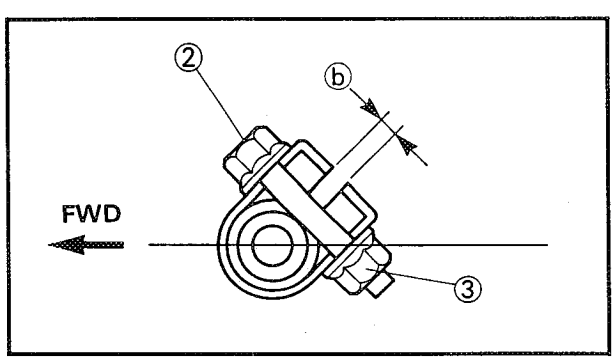

WARNING:

Always use a new bolt ② and nut ③.

	Bolt (Handlebar) ①: **60 Nm (6.0 m•kg, 43 ft•lb)**

9. Install:
   - Inner fender with cable guide

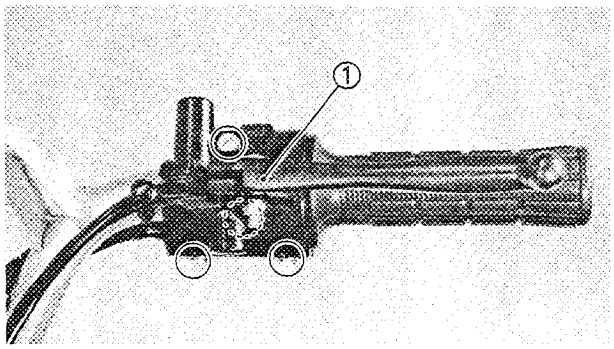

10. Install:
    - Rear brake lever assembly ①

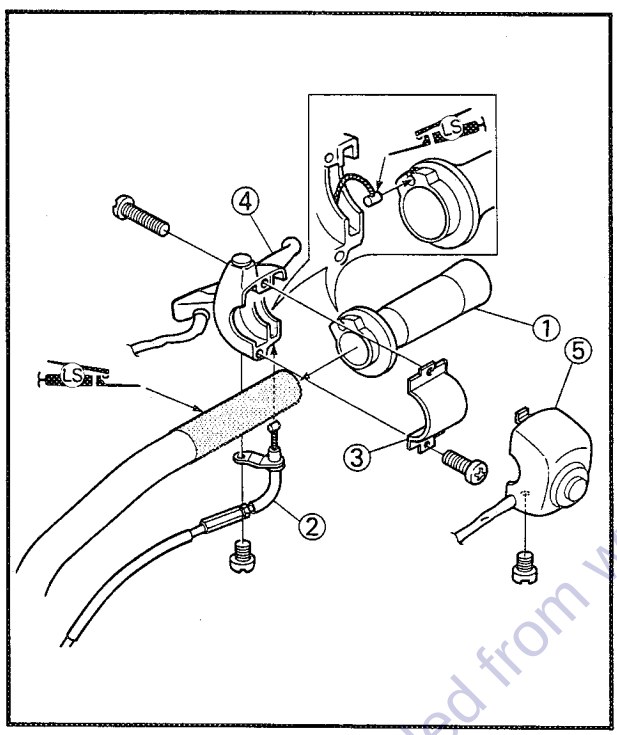

11. Apply:
    - Lithium-soap base grease
      To throttle cable end and handlebar right end.
12. Install:
    - Throttle grip ①
    - Throttle cable ②
    - Bracket ③
    - Front brake lever assembly ④
    - Handlebar switch (Right) ⑤

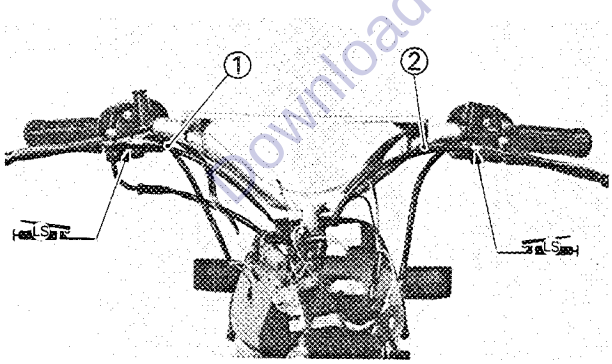

13. Install:
    - Front brake cable ①
    - Rear brake cable ②

NOTE:

Apply lithium-soap base grease onto the cable end pivot.

14. Install:
    - Handlebar covers (Front and rear)
    - Speedometer cable
    - Front panel
    - Front fender
      Refer to "CHAPTER 2 — FRONT FENDER, FRONT PANEL AND FOOTREST BOARD" and "HANDLEBAR COVERS" section.
15. Adjust:
    - Front and rear brake lever free play
    - Throttle cable free play
      Refer to "CHAPTER 2" section.

REAR SHOCK ABSORBER

① Rear shock absorber

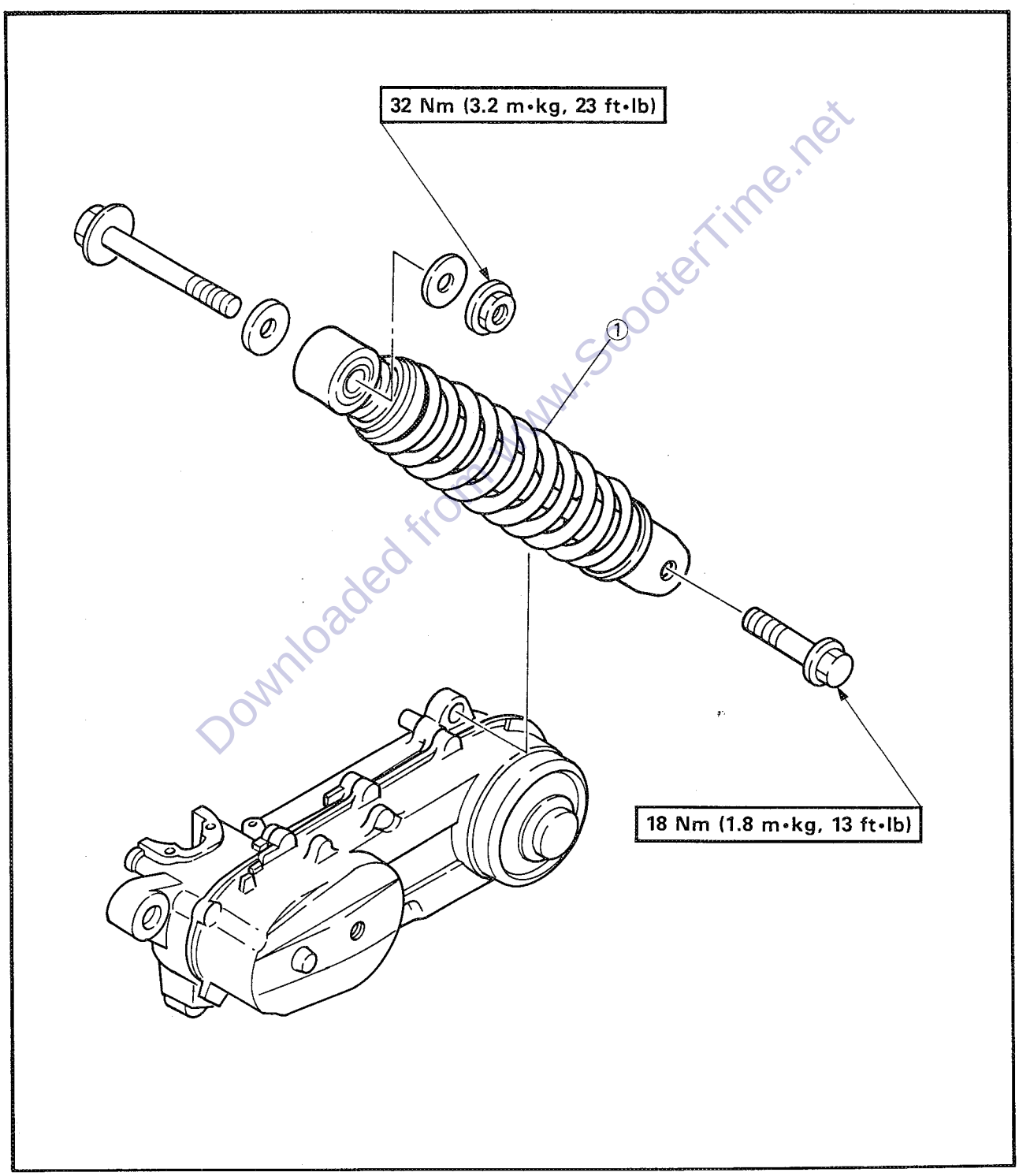

REAR SHOCK ABSORBER

REMOVAL

1. Place the scooter on its centerstand.

2. Remove:
   - Tail cover
     Refer to "CHAPTER 2—TAIL COVER" section.

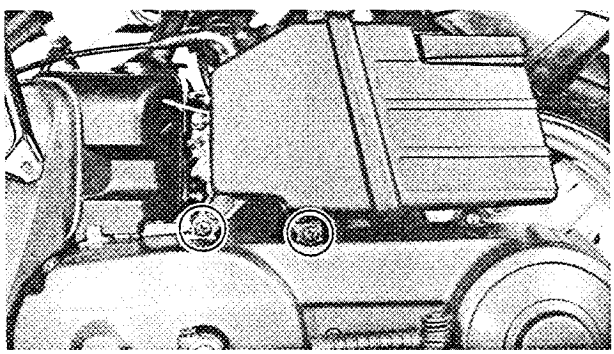

3. Remove:
   - Air cleaner case

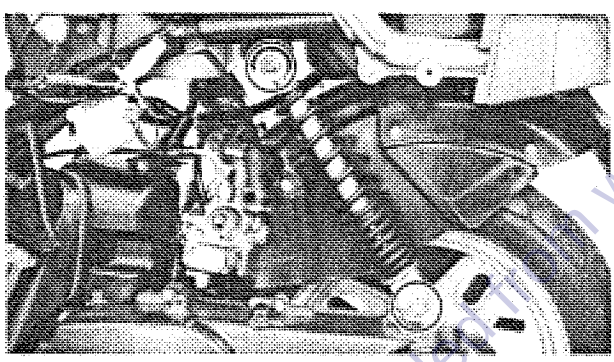

4. Remove:
   - Rear shock absorber

INSPECTION

1. Inspect:
   - Rear shock absorber
     Oil leaks/Damage→Replace.

INSTALLATION

When installing the rear shock absorber, reverse the removal procedure. Note the following points.

1. Install:
   - Rear shock absorber

	Upper: **32 Nm (3.2 m•kg, 23 ft•lb)** **Lower:** **18 Nm (1.8 m•kg, 13 ft•lb)**

CHAPTER 6
ELECTRICAL

ELECTRICAL

CE50T CIRCUIT DIAGRAM

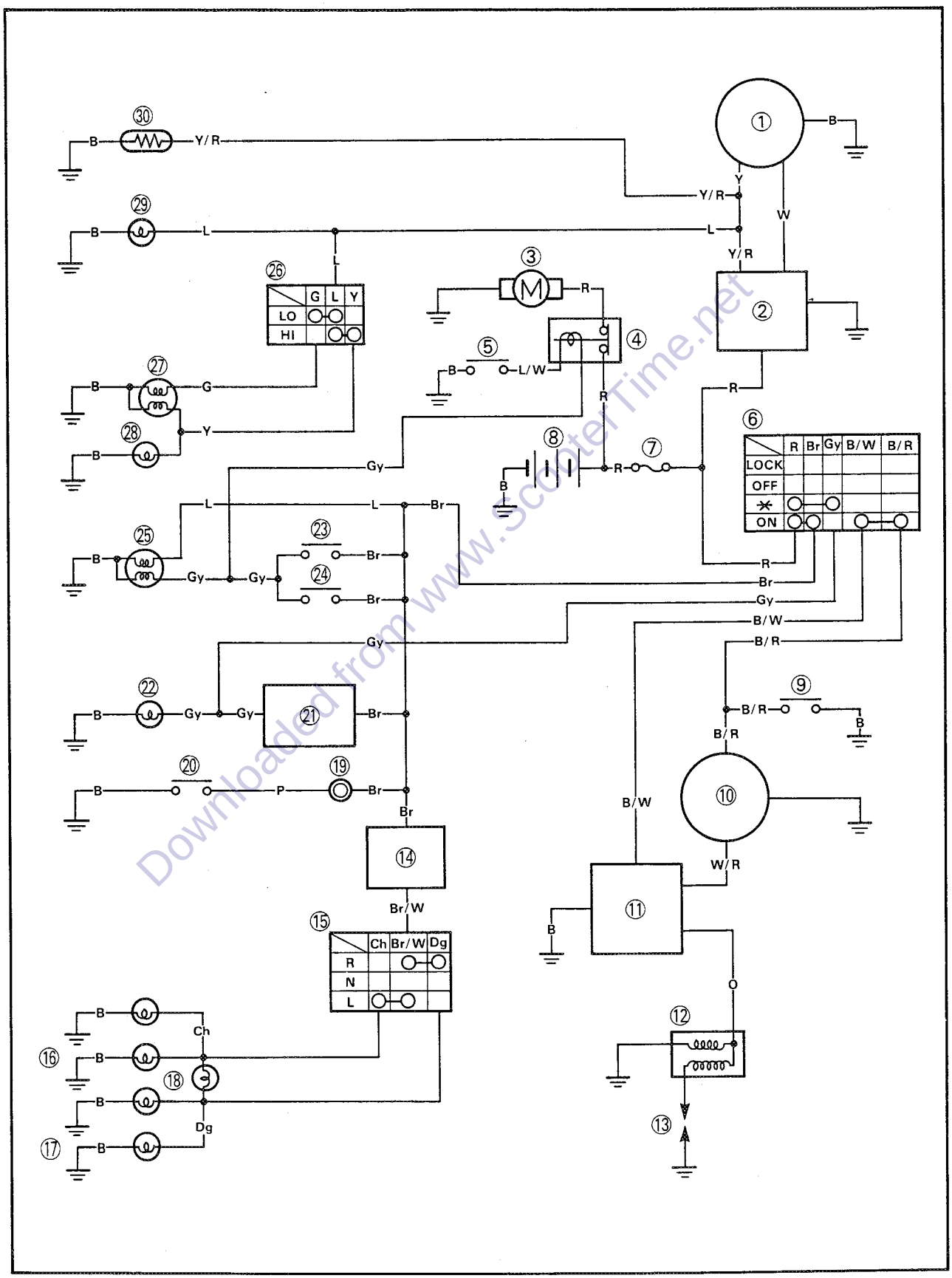

CE50T CIRCUIT DIAGRAM

① C.D.I. magneto
(Lighting coil, charging coil)
② Rectifier/Regulator
③ Starter motor
④ Starter relay
⑤ "START" switch
⑥ Main switch
⑦ Fuse
⑧ Battery
⑨ "ENGINE STOP" switch
⑩ C.D.I. magneto
(Source coil, pick-up coil)
⑪ C.D.I. unit
⑫ Ignition coil
⑬ Spark plug
⑭ Flasher light relay
⑮ "TURN" switch
⑯ Left flasher light (Front and rear)
⑰ Right flasher light (Front and rear)
⑱ "TURN" indicator light
⑲ Horn
⑳ Horn ( ) switch
㉑ Oil level gauge
㉒ "OIL" indicator light
㉓ Front brake switch
㉔ Rear brake switch
㉕ Tail/Brake light
㉖ "LIGHTS" switch (Dimmer)
㉗ Headlight
㉘ "HIGH BEAM" indicator light
㉙ Meter light
㉚ Auto choke unit

COLOR CODE

R	Red	P	Pink
B	Black	L	Blue
W	White	Y/R	Yellow/Red
Y	Yellow	L/W	Blue/White
Br	Brown	G/Y	Green/Yellow
Gy	Gray	B/W	Black/White
O	Orange	B/R	Black/Red
Ch	Chocolate	W/R	White/Red
Dg	Dark green	Br/W	Brown/White

ELECTRICAL COMPONENTS

① Fuse
② Oil level gauge
③ Ignition coil
④ Battery
⑤ C.D.I. unit
⑥ Starter relay

A	BATTERY TYPE: GM4-3B SPECIFIC GRAVITY: 1.280
B	IGNITION COIL RESISTANCE PRIMARY: 0.21 ~ 0.25Ω at 20°C (68°F) SECONDARY: 4.5 ~ 6.7kΩ at 20°C (68°F)

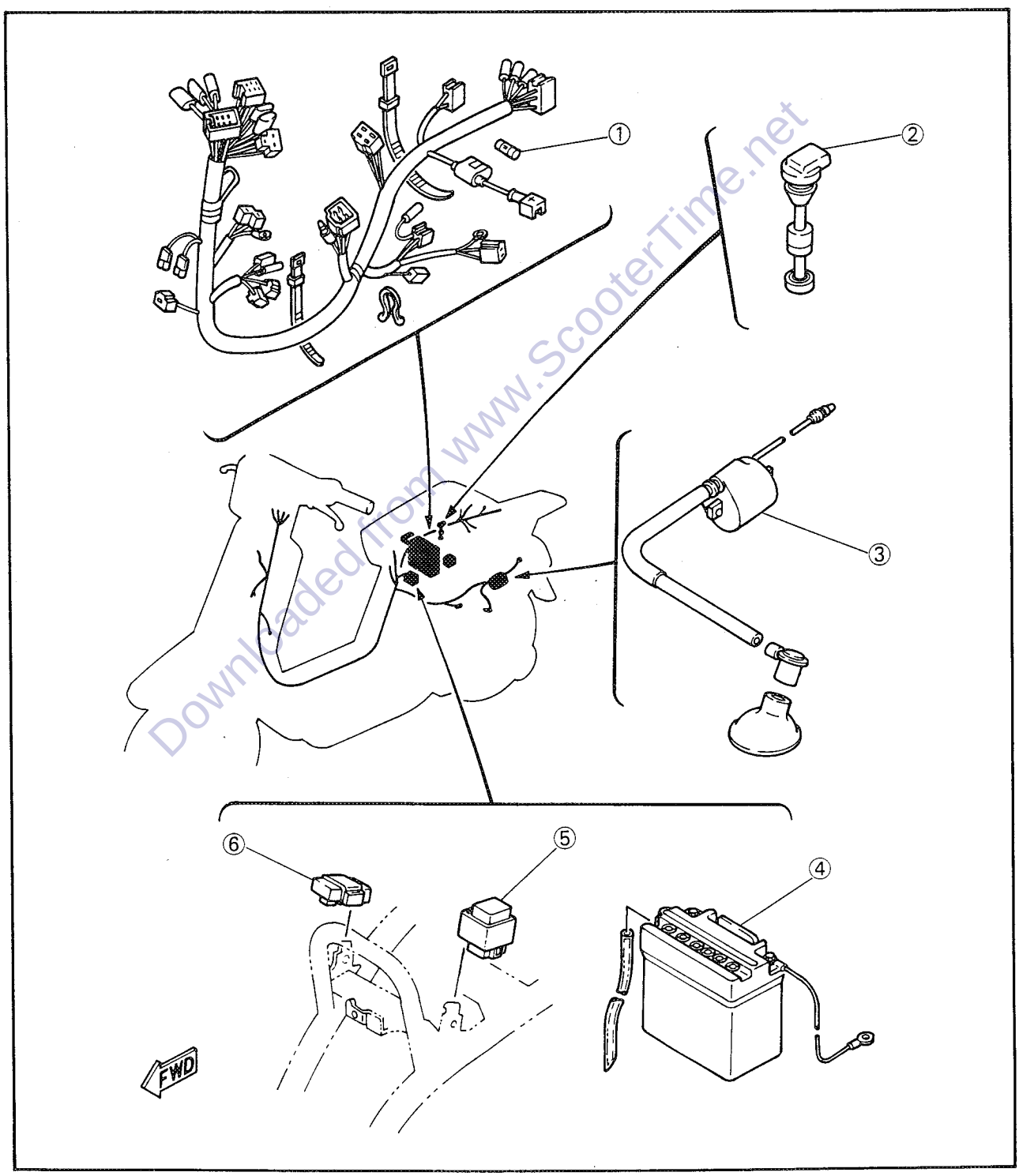

① Main switch
② Flasher light relay
③ Horn
④ Rectifier/Regulator

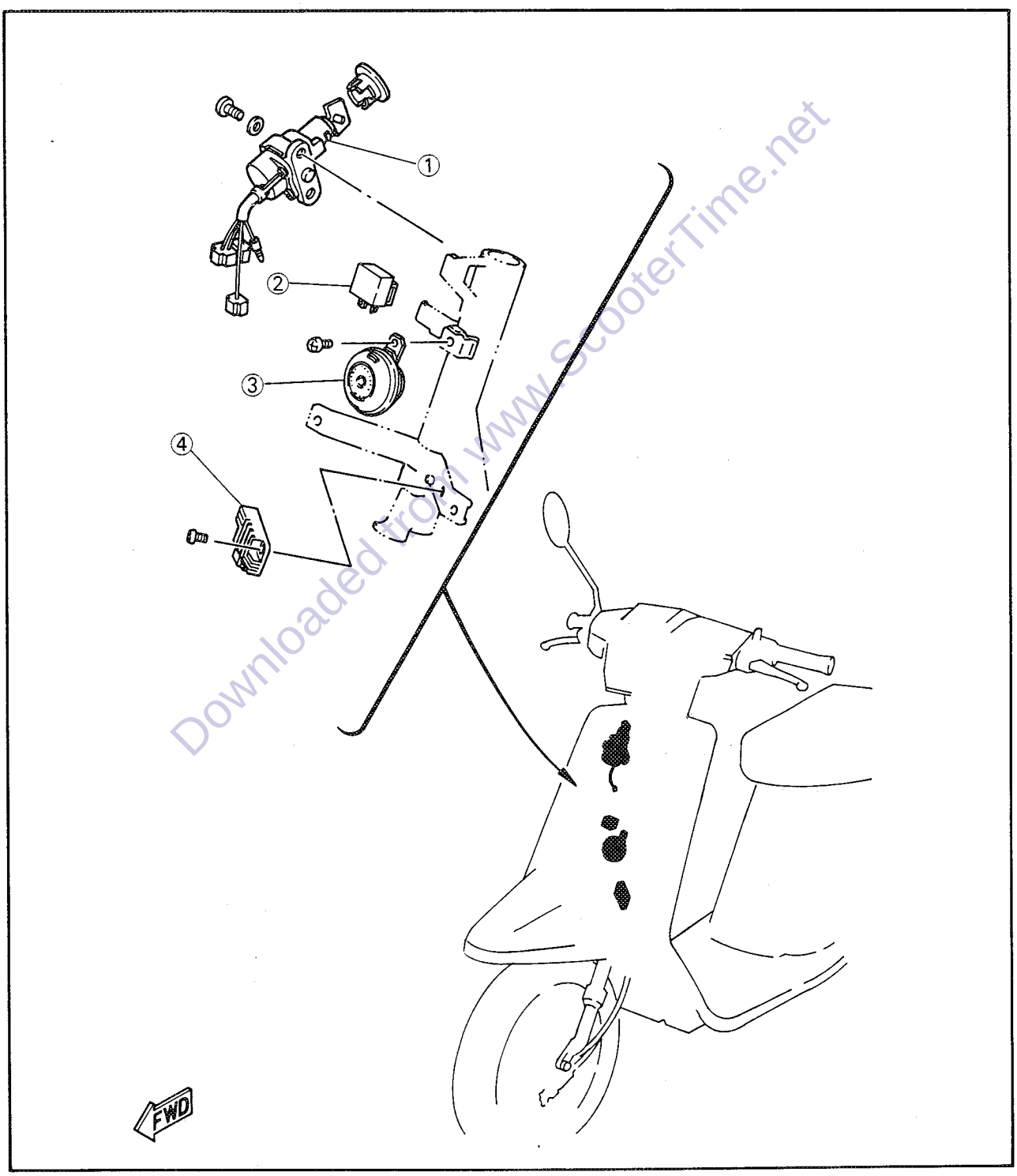

ELECTRICAL STARTING SYSTEM

CIRCUIT DIAGRAM

Below circuit diagram shows starter circuit.

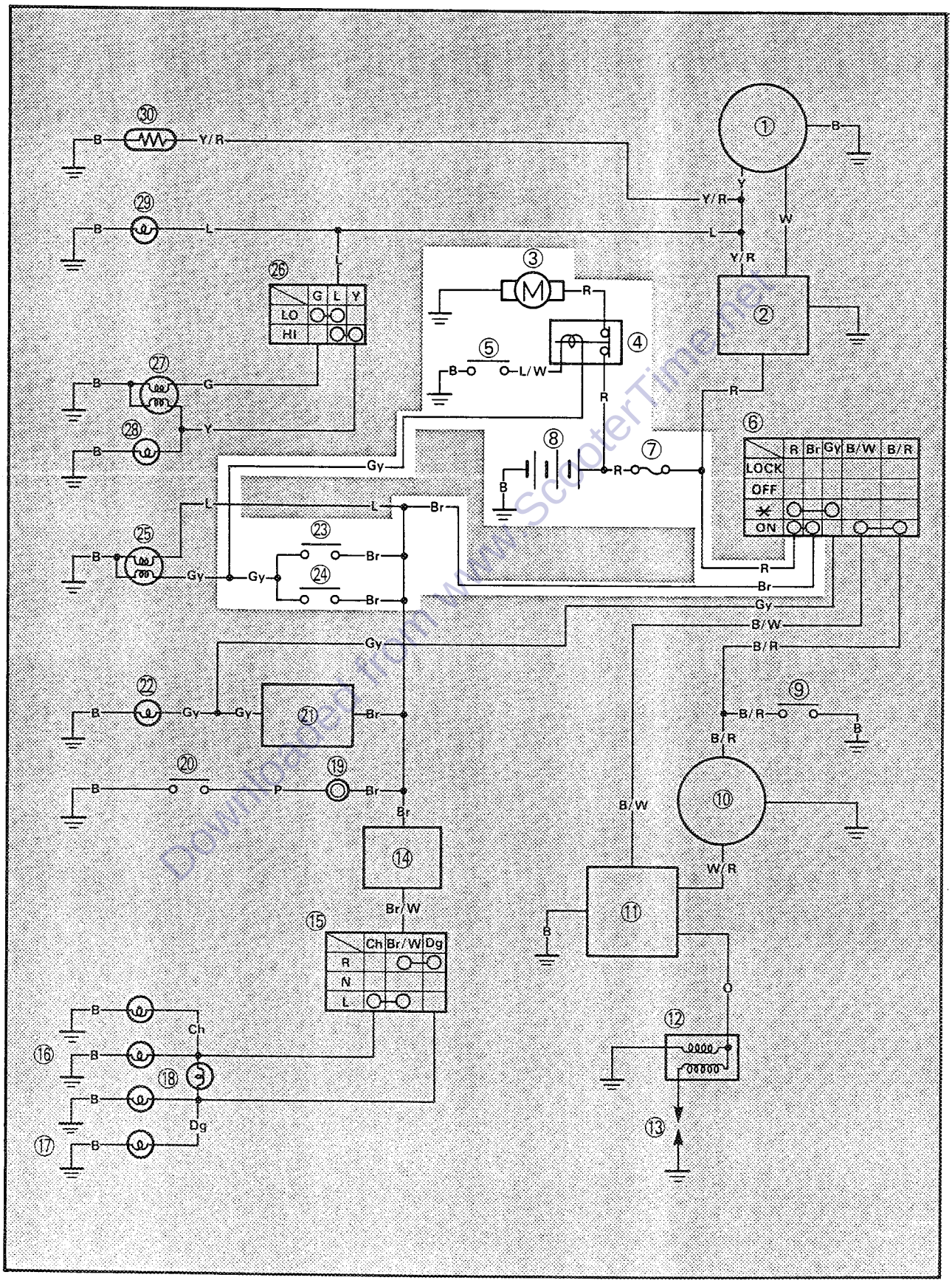

③ Starter motor
④ Starter relay
⑤ "START" switch
⑥ Main switch
⑦ Fuse
⑧ Battery
㉓ Front brake switch
㉔ Rear brake switch

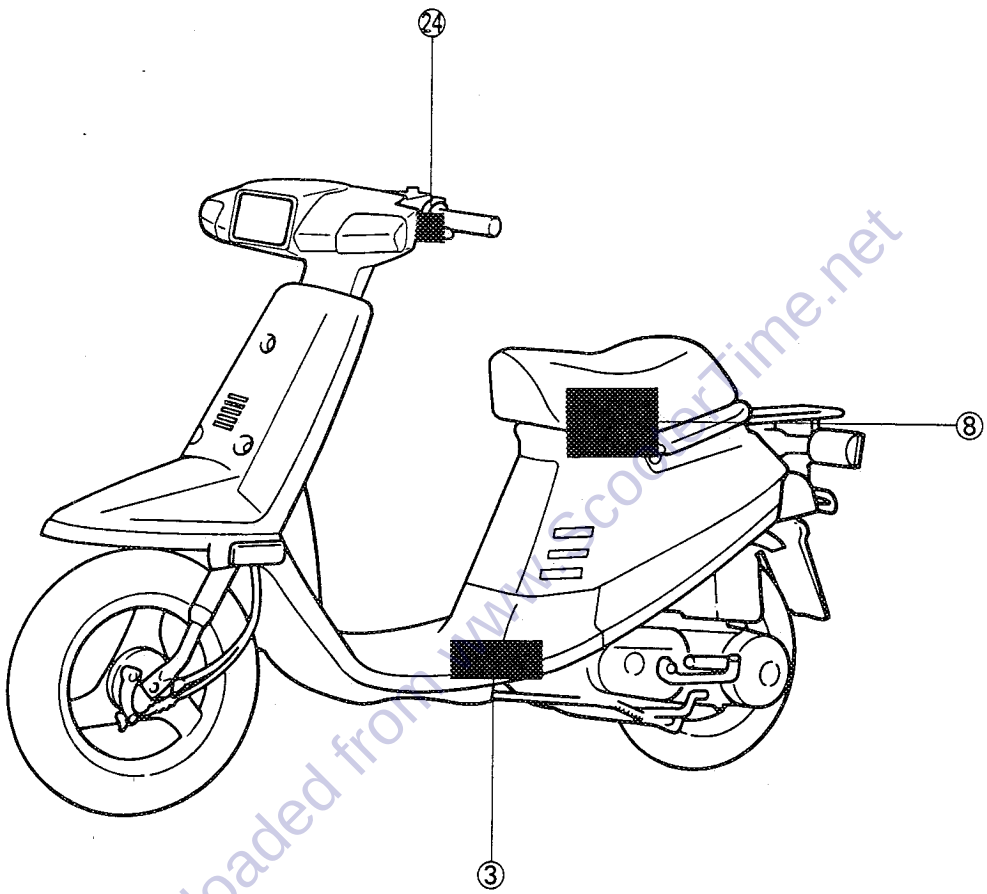

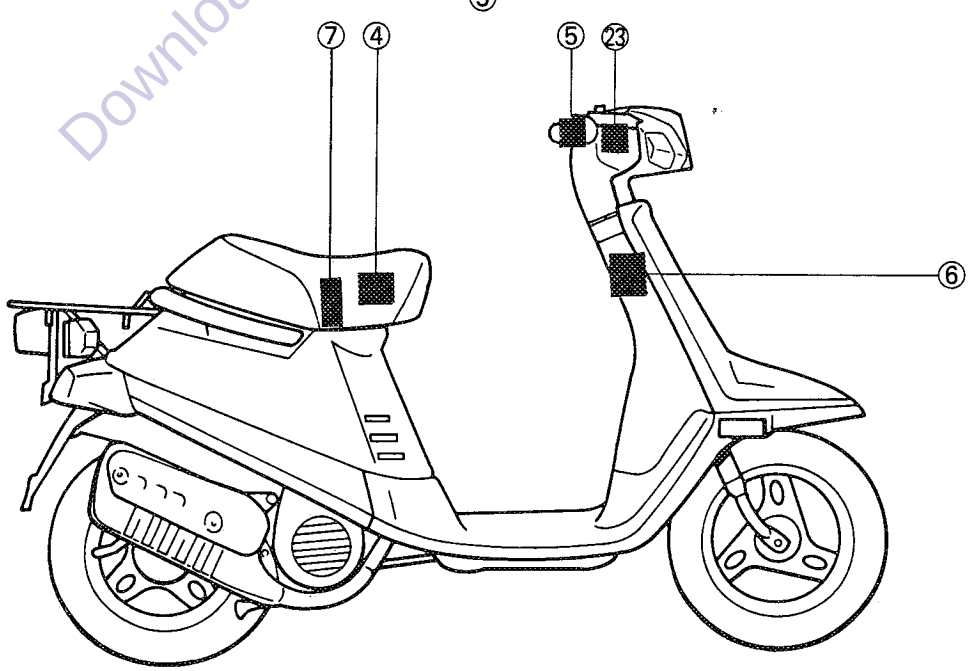

TROUBLESHOOTING CHART

STARTER MOTOR DOES NOT OPERATE

Fuse inspection:
1. Remove fuse.
2. Inspect fuse using Pocket Tester (YU-03112).

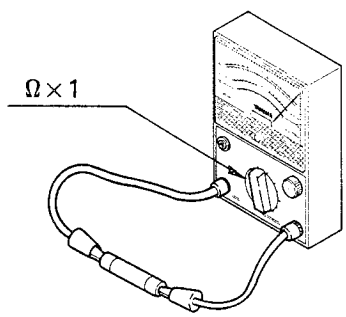

No Continuity → •Replace fuse.

Continuity ↓

Battery fluid level inspection:
Fluid level should be between upper ① and lower ② level mark.

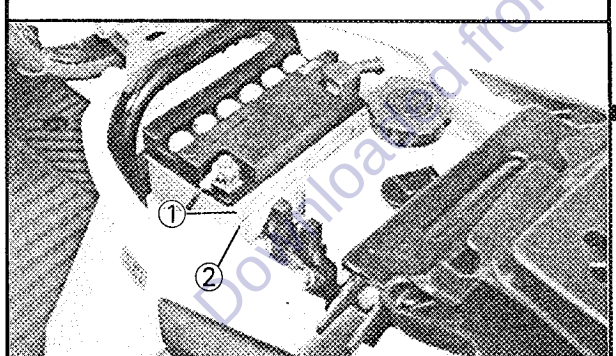

Incorrect → •Refill battery fluid.

CAUTION:

Refill with distilled water only; tap water contains minerals harmful to a battery.

Correct ↓

Check battery terminals.

Dirty or poor connection → •Clean battery terminals using wire brush.

NOTE:

After cleaning terminals, apply grease lightly to both terminals.

•Connect battery leads correctly.

OK ↓

Battery fluid specific gravity inspection:

1. Remove caps.
2. Inspect specific gravity of all cell using Battery Hydrometer.

WARNING:

Battery electrolyte is poisonous and dangerous, causing severe burns, etc. It contains sulfuric acid. Avoid contact with skin, eyes or clothing. Antidote: EXTERNAL-Flush with water. INTERNAL-Drink large quantities of water or milk. Follow with milk of magnesia, beaten egg, or vegetable oil. Call a physician immediately.
Eyes: Flush with water for 15 minutes and get prompt medical attention. Batteries produce explosive gases. Keep sparks, flame, cigarettes etc., away. Ventilate when charging or using in an enclosed space. Always shield your eyes when working near batteries.
KEEP OUT OF REACH OF CHILDREN.

Specific Gravity:
1.280 ± 0.01 at 20°C (68°F)

If there is not Battery Hydrometer, check battery voltage using Pocket Tester (YU-03112).

1. Remove battery.
2. Set the Tester selector to "DC20V" position.
3. Connect tester leads to battery terminals.

Tester (+) lead → (+) terminal
Tester (−) lead → (−) terminal

Battery Voltage:
12 V or more.

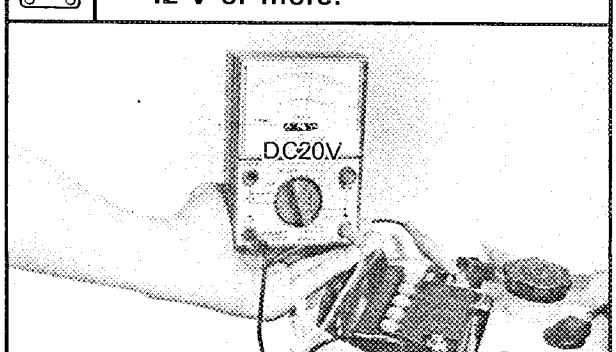

OK

Low specific gravity (voltage)

- Recharge battery

Charging Current:
0.4 amps/10 hrs

NOTE:

Replace the battery if:

- Batery voltage will not rise to a specific value or bubbles fail to rise even after many hours of charging.
- Sulfation of one or more cells occurs, as indicated by the plates turning white, or an accumulation of materiad exists in the bottom of the cell.
- Specific gravity readings after a long, slow charge indicate on cell to be lower than the rest.
- Warpage or buckling of plates or insulators is evident.

Main switch conduct check:
1. Disconnect main switch leads.
2. Set Pocket Tester (YU-03112) selector to "Ω×1" position.
3. Connect tester leads to main switch leads (Red lead, Brown lead).

Tester (+) lead →Red lead
Tester (−) lead→Brown lead

4. Turn main switch to "ON" position.

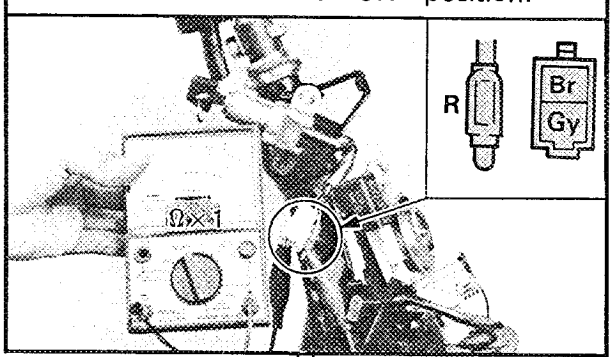

No Continuity → Replace main switch.

Continuity ↓

"START" switch conduct check:
1. Disconnect handlebar switch (Right) leads.
2. Set Pocket Tester (YU-03112) selector to "Ω×1" position.
3. Connect tester leads to "START" switch leads (Black lead, Blue/White lead).

Tester (+) lead→Blue/White lead
Tester (−) lead→Black lead

4. Push on "START" switch

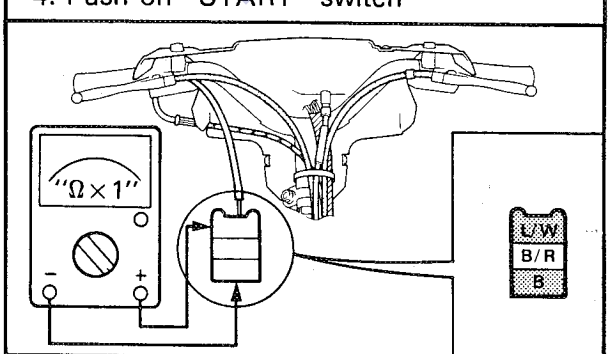

No Continuity → Replace handlebar switch (Right).

Continuity ↓

Front and rear brake switches conduct check:

1. Disconnect brake switch leads.
2. Set pocket Tester (YU-03112) selector to "Ω×1" position.
3. Connect teser leads to brake switch leads (Brown lead, Green/Yellow lead).

Tester (+) lead →Brown lead
Tester (−) lead→Green/Yellow lead

4. Apply front or rear brake.

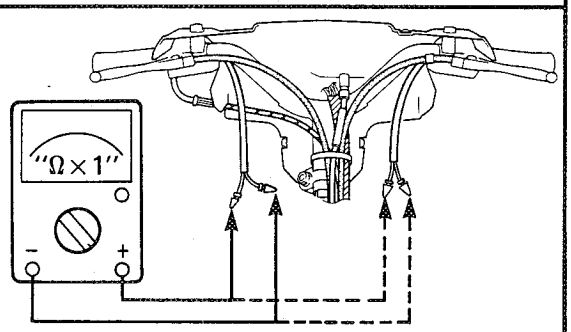

No Continuity → Replace front and/or rear brake switch.

Continuity ↓

Starter relay conduct check:

1. Remove starter relay.
2. Connect 12V battery to starter relay terminals as shows.

NOTE:
Use full charge battery.

3. Set Pocket Tester (YU-03112) selector to "Ω×1" position.
4. Connect tester leads to starter relay terminals as shows.

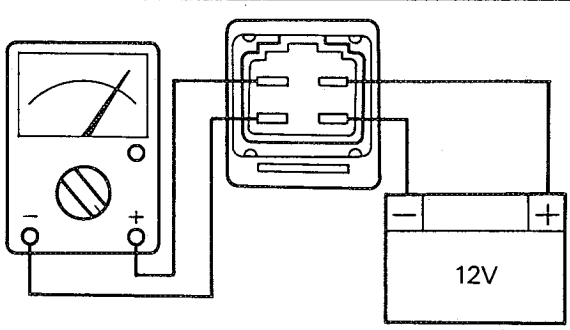

No Continuity → Replace starter relay.

Continuity ↓

ELECTRICAL STARTING SYSTEM

Check entire electrical starting system for connections. Refer to "WIRING DIAGRAM".

Poor connection → Correct.

OK

Check starter motor condition. Refer to "STARTER MOTOR CHECK" section.

Poor condition → Replace starter motor.

STARTER MOTOR

① O-ring
② Armature
③ Brush

NOTE:

The starter motor for this scooter comes in two types:

DA5AG (2EX-81800-M0) (NIPPON DENSO)
2EX-81800-50 (YAMAHA)

So, check which type in fitted before maintenance. Data for YAMAHA's starter motor are shown in brackets ([ ]).

A	COMMUTATOR UNDER CUT: 1.0 mm (0.039 in) [1.15 mm (0.045 in)]
B	COMMUTATOR DIAMETER WEAR LIMIT: 14.5 mm (0.57 in) [14.8 mm (0.58 in)]
C	BRUSH WEAR LIMIT: 2.5 mm (0.10 in) [0.9 mm (0.04 in)]

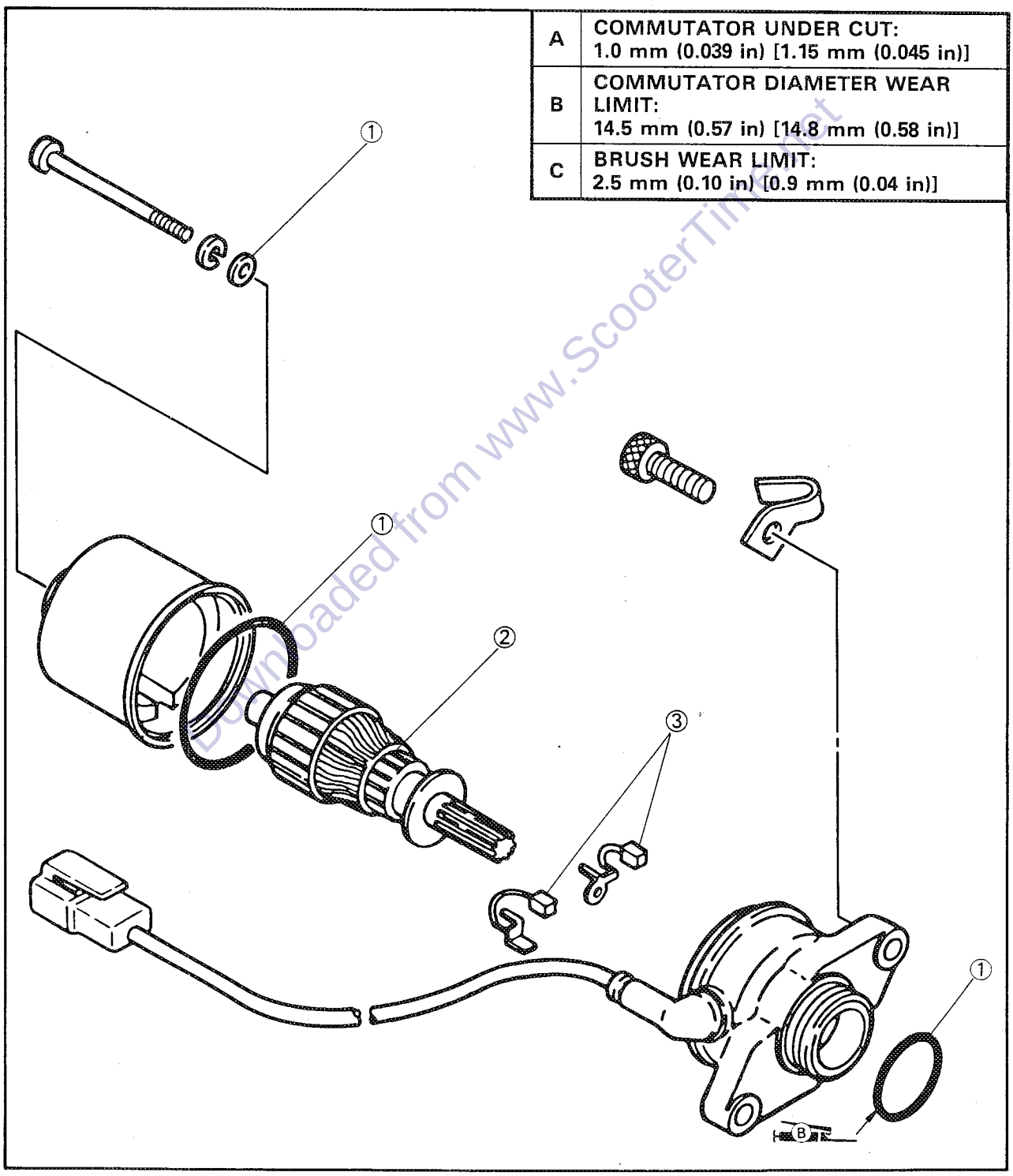

STARTER MOTOR CHECK

Removal

1. Remove:
   - Starter motor
     Refer to "CHAPTER 3 — ENGINE DISASSEMBLY" section.

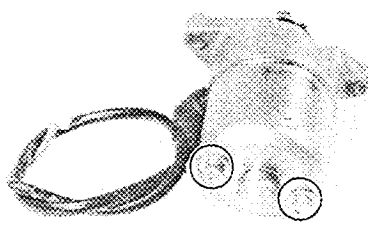

2. Remove:
   - Yoke assembly

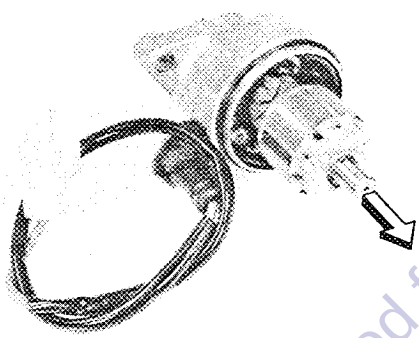

3. Remove:
   - Armature

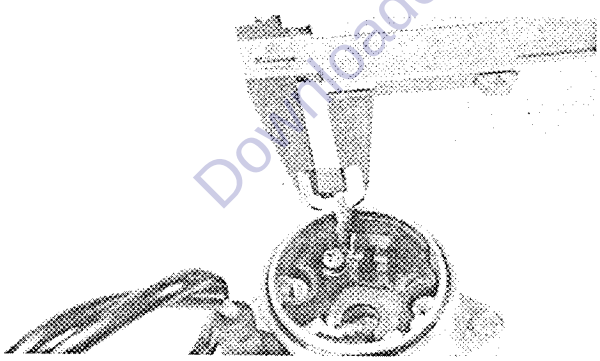

Inspection and Repair

1. Measure:
   - Brush length (Each)
     Out of specification→Replace the starter motor assembly.

Minimum Brush Length: **2.5 mm (0.10 in)** **[0.9 mm (0.04 in)]**

2. Inspect:
   - Brush spring
     Wear/Damage→Replace the starter motor assembly.

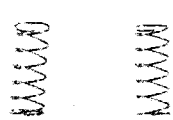

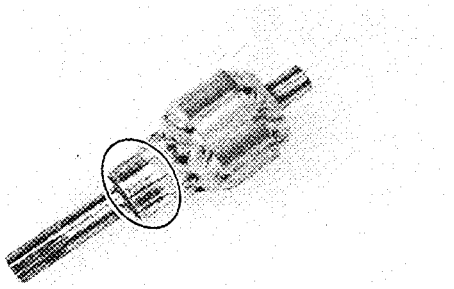

3. Inspect:
   - Commutator (Outer surface)
     Grooved wear/Burning/scratches→
     Smooth out using a sandpaper (#500~600).

NOTE:

Sand the commutator outer surface lightly and evenly.

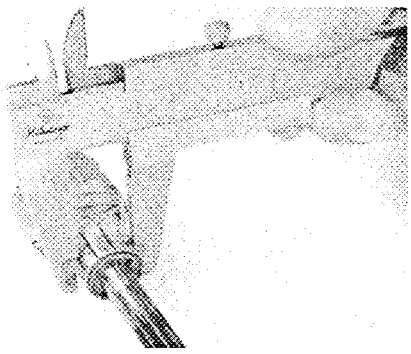

4. Measure.
   - Commutator diameter
     Out of specification→Replace the starter motor assembly.

Outside Diameter Limit:
14.5 mm (0.57 in)
[14.8 mm (0.58 in)]

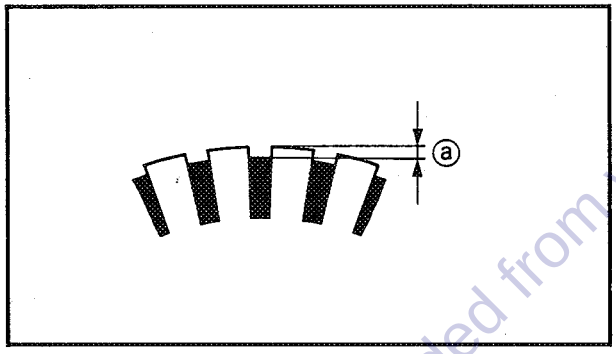

5. Measure:
   - Mica undercut ⓐ
     Out of specification→Scrape mica using a hacksaw blade.

Mica Undercut ⓐ:
1.0 mm (0.039 in)
[1.15 mm (0.045 in)]

NOTE:

The mica insulation of the commutator must be undercut to ensure proper operation of the commutator.

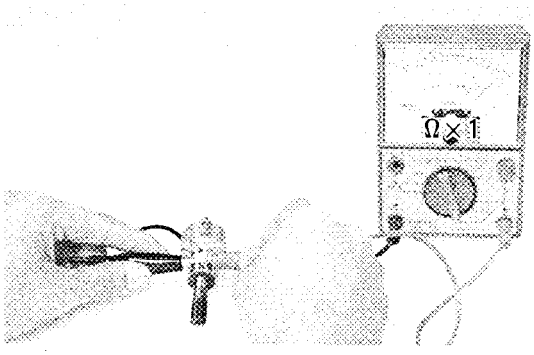

6. Measure:
   - Armature coil resistance
     Out of specification→Replace the starter motor assembly.

Armature Coil Resistance:
0.08~0.10Ω at 20°C (68°F)

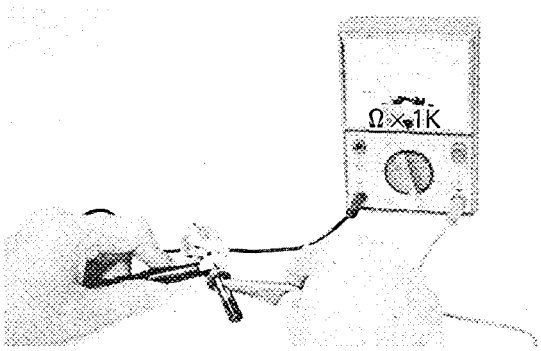

7. Check:
   - Armature coil insulation
     Set the pocket tester selector to "Ω×1K" position.
     Continuity→Replace the starter motor assembly.

Assembly

Reverse the removal procedure.
Note the following points.

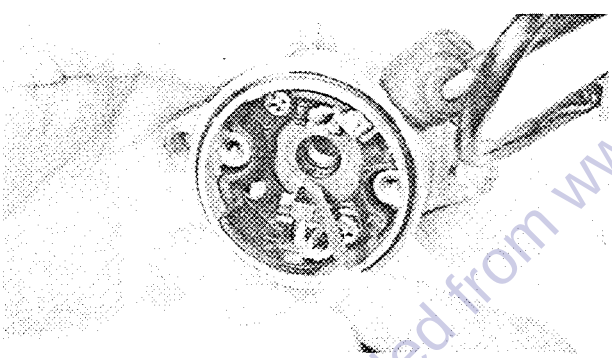

1. Install:
   - Brush
   - Brush spring
     Using a thin screw driver.

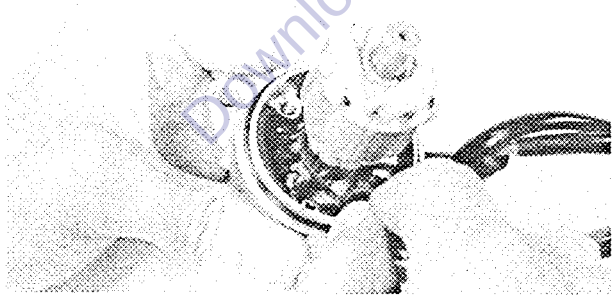

2. Install:
   - Armature coil assembly

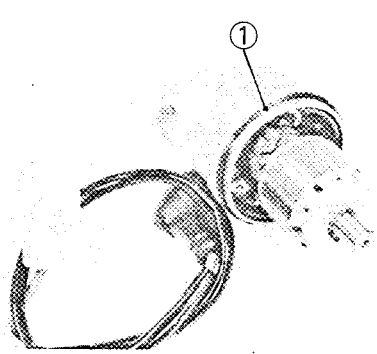

3. Install:
   - O-ring (New) ①

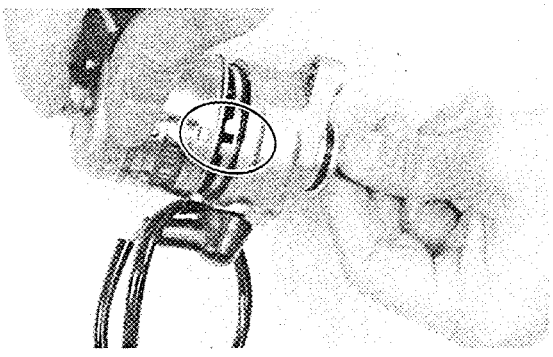

4. Install:
   - Starter motor cover

NOTE:

Align the projection on the cover with the groove on the housing.

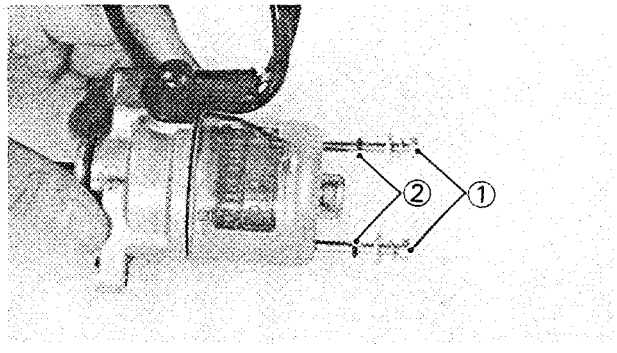

5. Install:
   - Bolts ①
   - O-rings (New) ②

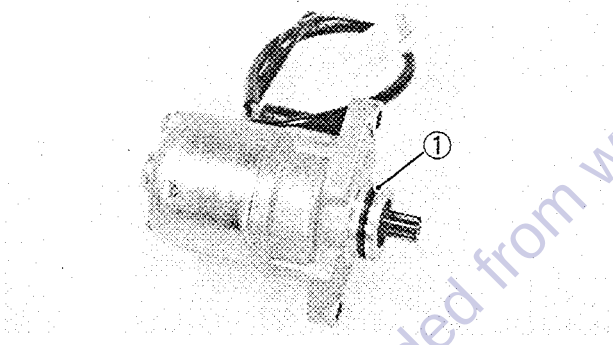

6. Install:
   - O-ring (New) ①

NOTE:

Apply a grease lightly.

Installation

1. Install:
   - Starter motor

	9 Nm (0.9 m•kg, 6.5 ft•lb)

IGNITION SYSTEM

CIRCUIT DIAGRAM

Below circuit diagram shows ignition circuit.

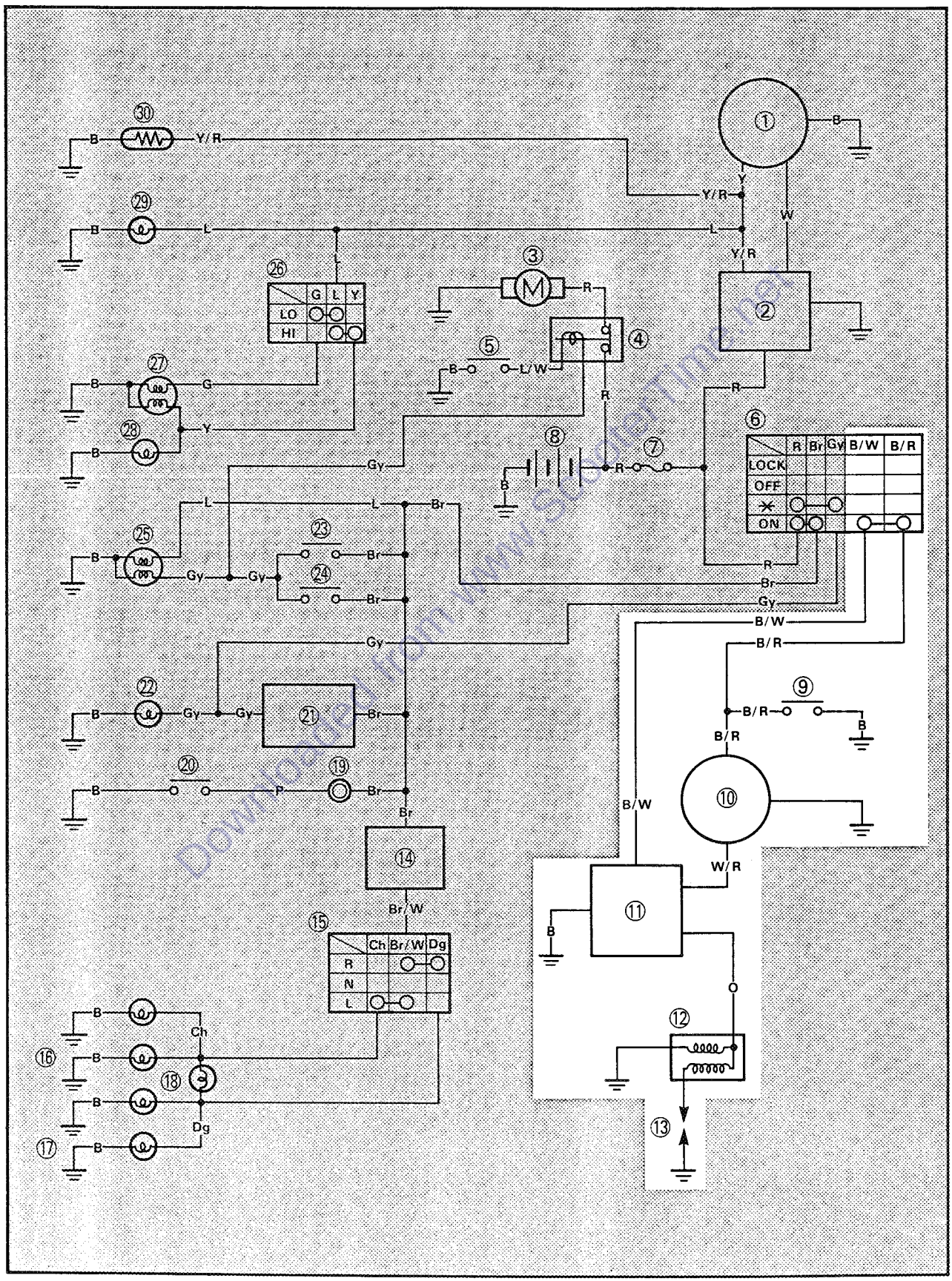

⑥ Main switch
⑨ "ENGINE STOP" switch
⑩ C.D.I. magneto
(Source coil, pick-up coil)
⑪ C.D.I. unit
⑫ Ignition coil
⑬ Spark plug

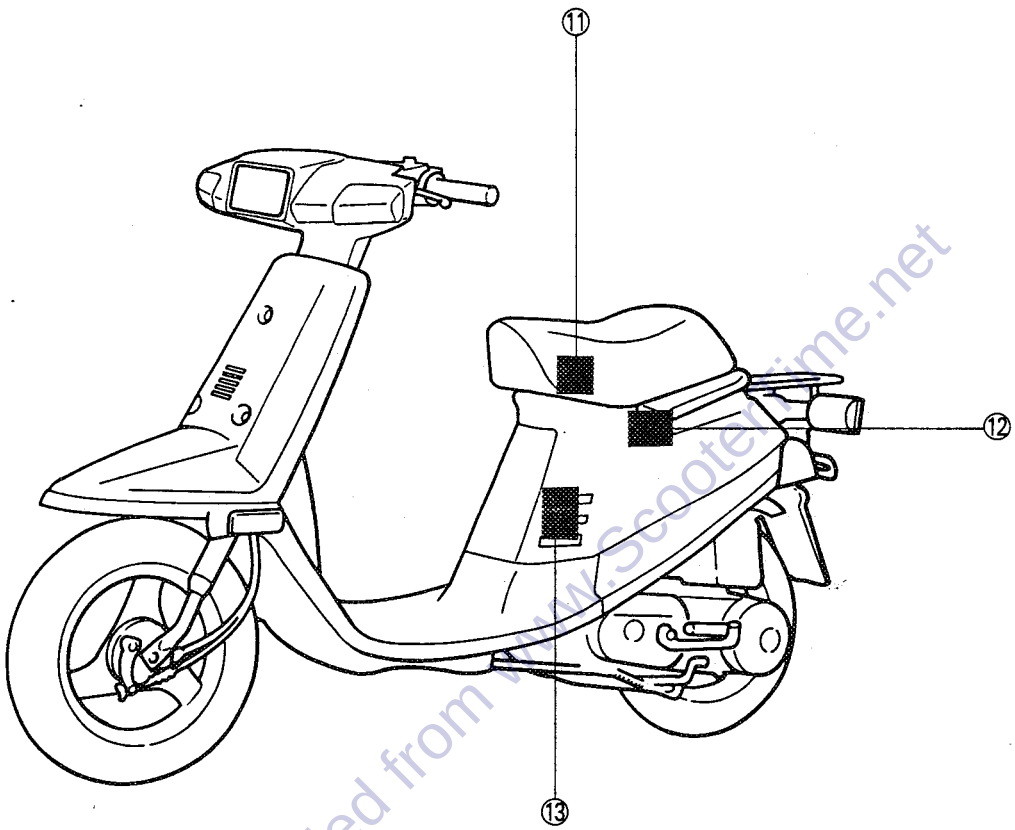

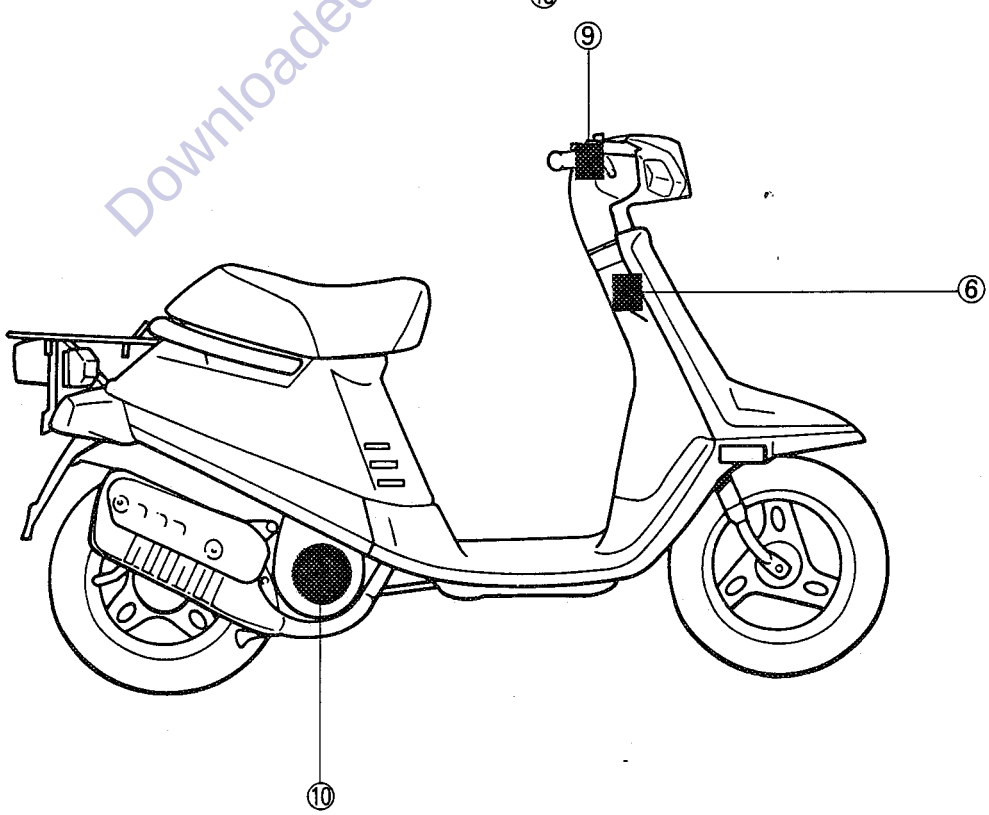

TROUBLESHOOTING CHART

IF IGNITION SYSTEM SHOULD BECOME INOPERATIVE (NO SPARK OR INTERMITTENT SPARK).

Spark plug inspection:
1. Remove spark plug.
2. Clean spark plug with spark plug cleaner if necessary.
3. Inspect:
   - Electrode
   - Insulator
   - Plug gap

   Refer to "CHAPTER 2 — SPARK PLUG INSPECTION" section.

Plug Gap:
0.9~1.0 mm (0.035~0.039 in)

No good → Replace or regap spark plug.

OK

Ignition spark test:
1. Install spark plug to plug cap.
2. Ground spark plug to air shroud.
3. Start starter motor.

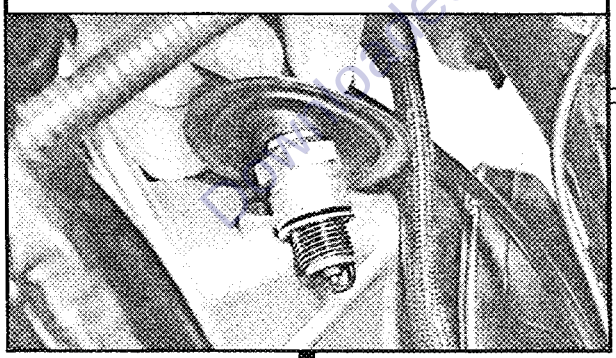

Spark → Ignition circuit is good.

No spark

Ignition spark gap test:
1. Remove spark plug and plug cap.
2. Hold spark plug lead 5 mm (0.20 in) from air shroud.
3. Start starter motor.

Spark → Replace spark plug and/or plug cap.

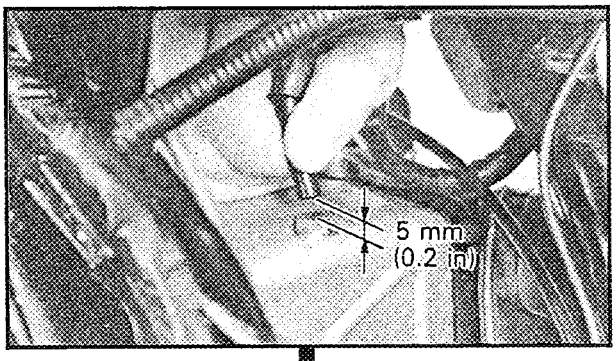

No spark

Main switch conduct check:
1. Disconnect main switch leads.
2. Set Pocket Tester (YU-03112) selector to "Ω×1" position.
3. Connect tester leads to main switch leads (Black/White, Black/Red).

Tester (+) lead→Black/Red lead
Tester (−) lead→Black/White lead

No continuity → Replace main switch.

4. Turn main switch to "ON" position.

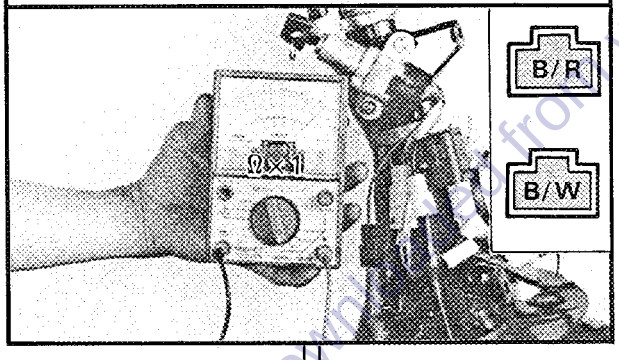

Continuity

"ENGINE STOP" switch conduct check:
1. Disconnect handlebar switch (Right) leads.
2. Set Pocket Tester (YU-03112) selector to "Ω×1" position.
3. Connect tester leads to "ENGINE STOP" switch leads.

Tester (+) lead→Black/Red lead
Tester (−) lead→Black lead

Continuity → Replace handlebar switch (Right).

4. Turn "ENGINE STOP" switch to "RUN" position.

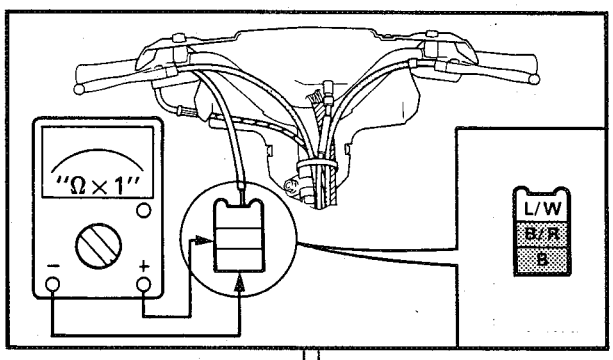

No continuity

Ignition coil resistance test:

1. Disconnect ignition coil lead (orange lead).
2. Measure:
   - Primary coil resistance [A]
     (Orange lead — Ignition coil base)
     Set Pocket Tester (YU-03112) selector to "Ω×1" position.
   - Secondary coil resistance [B]
     (Orange lead — Spark plug lead)
     Set Pocket Tester selector to "Ω×1K" position.

Primary Coil Resistance:
0.21~0.25Ω at 20°C (68°F)
Secondary Coil Resistance:
4.5~6.7kΩ at 20°C (68°F)

Out of specification → Replace ignition coil.

A

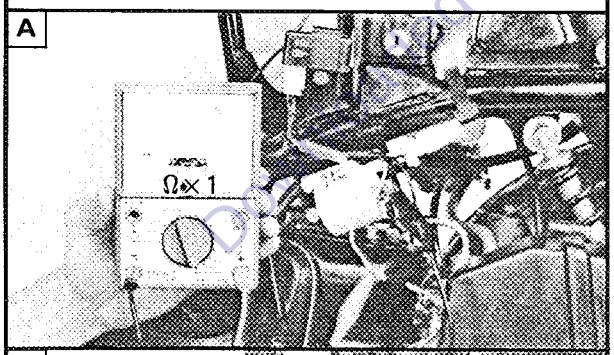

B

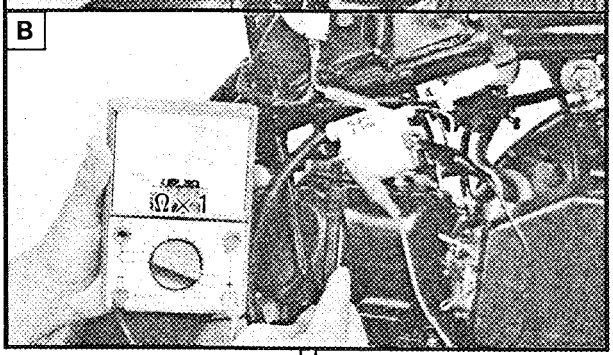

OK

Source coil resistance test:
1. Disconnect C.D.I. magneto leads.
2. Set Pocket Tester (YU-03112) selector to "Ω × 100" position.
3. Connect tester leads to source coil leads.

Tester (+) lead → Black/Red lead
Tester (−) lead → Black lead

Out of specification → Replace source coil.

4. Measure:
   - Source coil resistance

216 ~ 264Ω at 20°C (68°F)

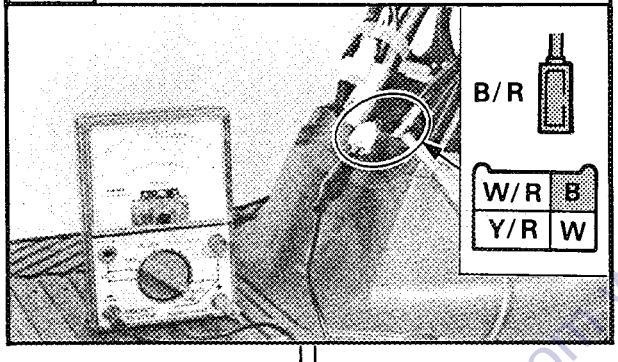

OK

Pick-up coil resistance test:
1. Set Pocket Tester (YU-03112) selector to "Ω × 10" position.
2. Connect tester leads to pick-up coil leads.

Tester (+) lead → White/Red lead
Tester (−) lead → Black lead

Out of specification → Replace pick-up coil.

3. Measure:
   - Pick-up coil resistance

27 ~ 33Ω at 20°C (68°F)

IGNITION SYSTEM

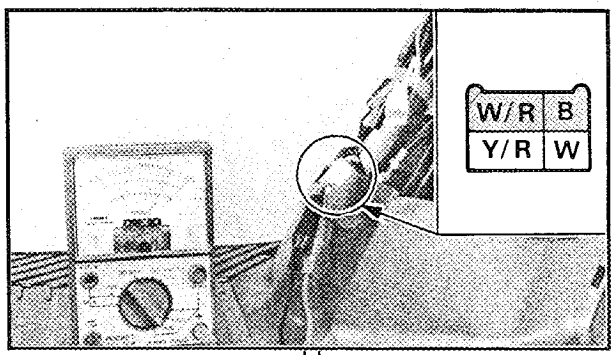

OK

Check entire ignition system for connections.
Refer to "WIRING DIAGRAM".

Poor connection → Correct.

OK

C.D.I. unit is faulty, replace it.

CHARGING SYSTEM

CIRCUIT DIAGRAM

Below circuit diagram shows charging circuit.

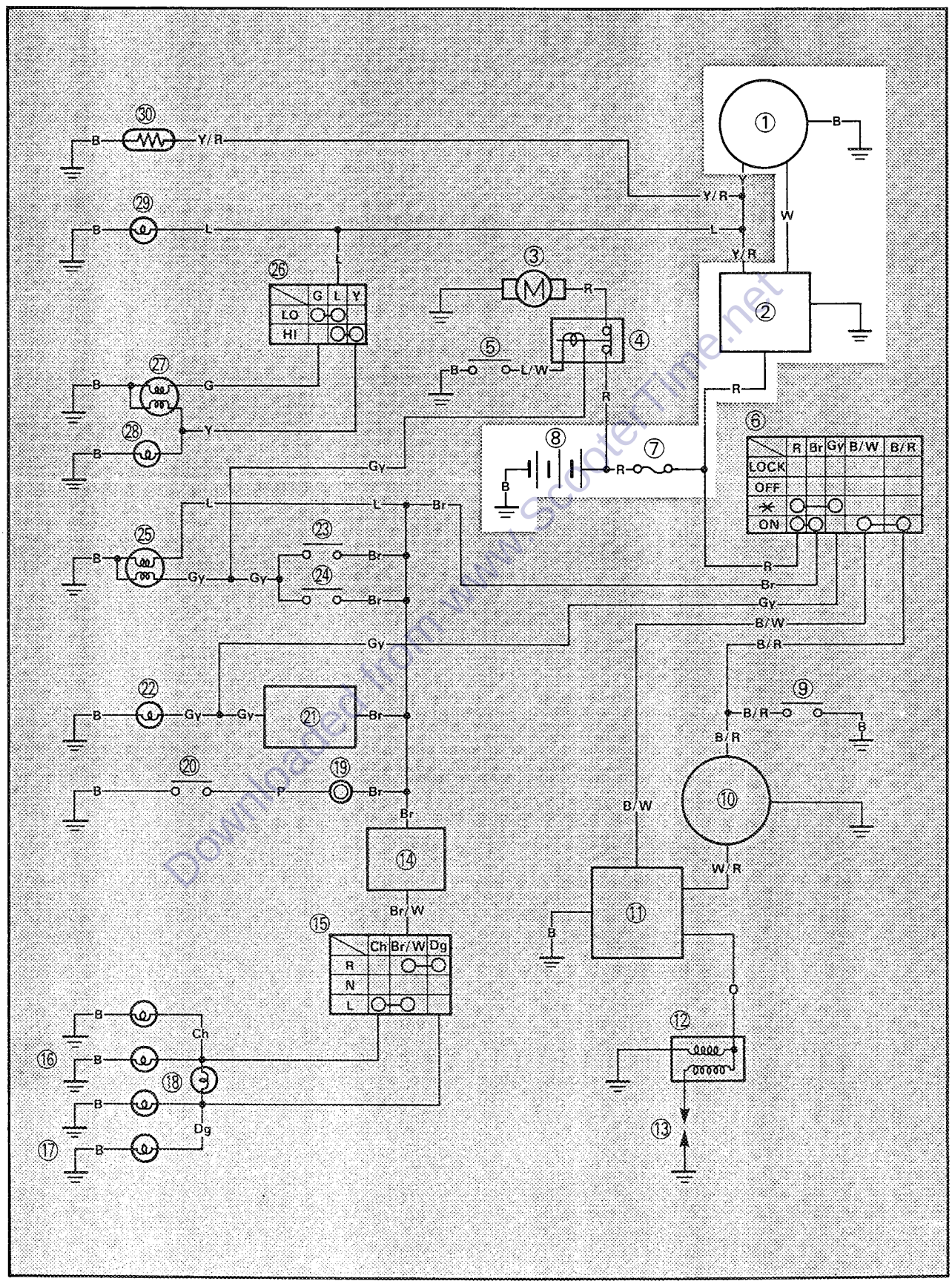

① C.D.I. magneto
(Lighting coil, charging coil)
② Rectifier/Regulator
⑦ Fuse
⑧ Battery

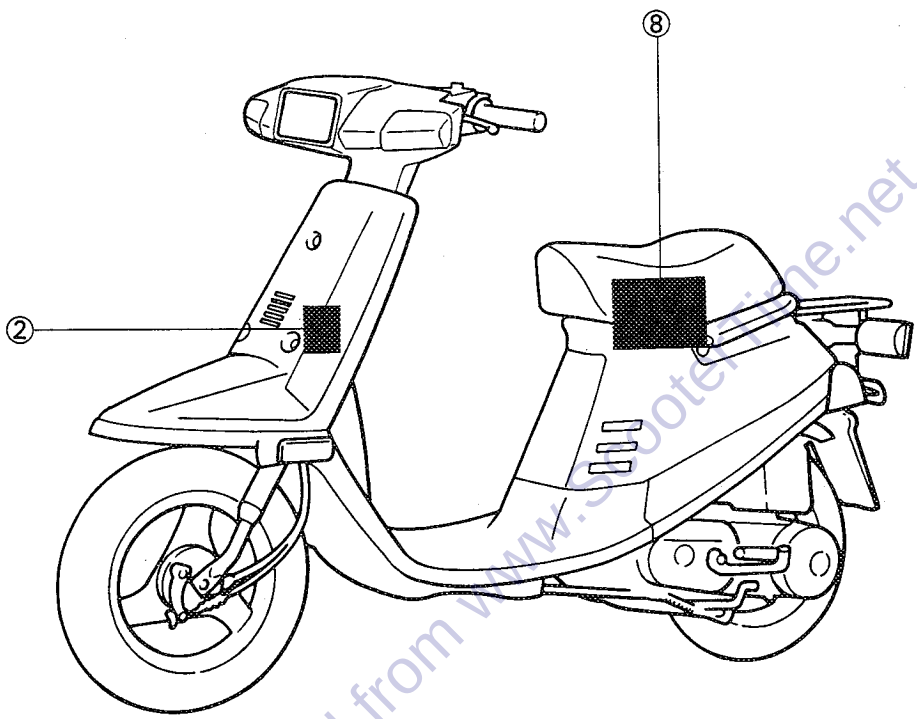

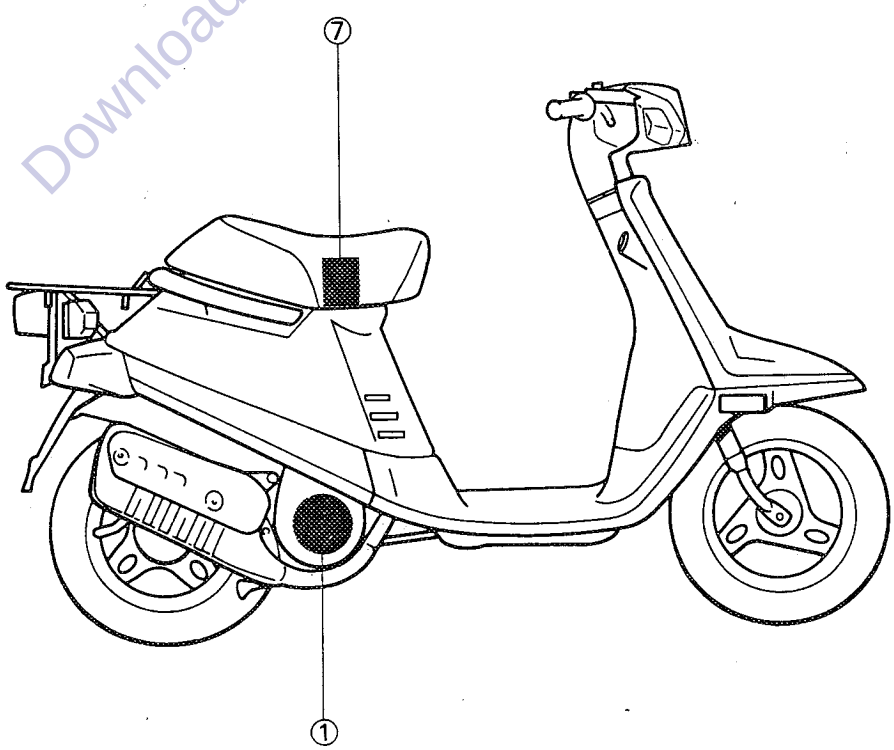

TROUBLESHOOTING CHART

THE BATTERY IS NOT CHARGED.

Fuse inspection:
1. Remove fuse.
2. Inspect fuse using Pocket Tester (YU-03112).

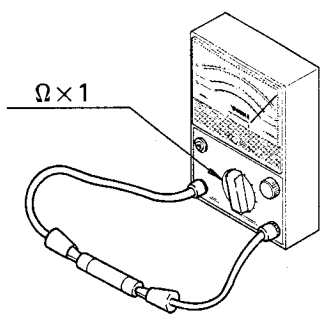

No continuity → •Replace fuse.

Continuity ↓

Battery fluid level inspection:
Fluid level should be between upper ① and lower ② level mark.

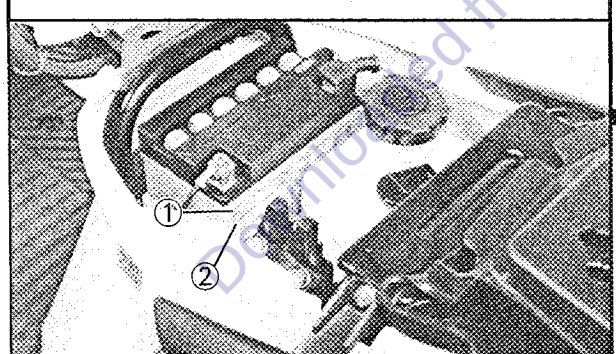

Incorrect → •Refill battery fluid.

CAUTION:

Refill with distilled water only; tap water contains minerals harmful to a battery.

Correct ↓

Check battery terminals.

Dirty or poor connection → •Clean battery terminals using wire brush.

NOTE:

After cleaning terminals, apply grease lightly to both terminals.

•Connect battery leads correctly.

OK ↓

Battery fluid specific gravity inspection:

1. Remove caps.
2. Inspect specific gravity of all cell using Battery Hydrometer.

WARNING:

Battery electrolyte is poisonous and dangerous, causing severe burns, etc. It contains sulfuric acid. Avoid contact with skin, eyes or clothing.
Antidote: EXTERNAL-Flush with water. INTERNAL-Drink large quantities of water or milk. Follow with milk of magnesia, beaten egg, or vegetable oil. Call a physician immediately.
Eyes: Flush with water for 15 minutes and get prompt medical attention. Batteries produce explosive gases. Keep sparks, flame, cigarettes etc., away. Ventilate when charging or using in an enclosed space. Always shield your eyes when working near batteries.
KEEP OUT OF REACH OF CHILDREN.

Specific Gravity:
1.280±0.01 at 20°C (68°F)

If there is not Battery Hydrometer, check battery voltage using Pocket Tester (YU-03112).

1. Remove battery.
2. Set the Tester selector to "DC20V" position.
3. Connect tester leads to battery terminals.

Tester (+) lead→(+) terminal
Tester (−) lead→(−) terminal

Battery Voltage:
12V or more

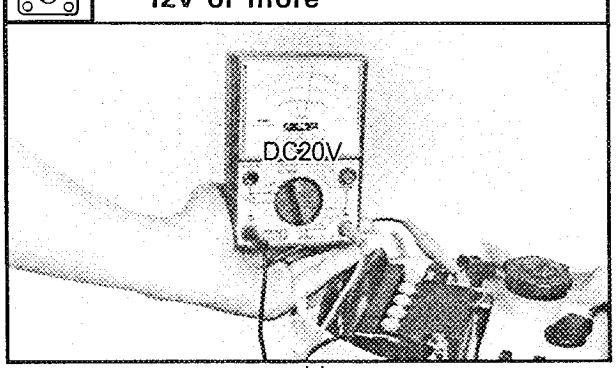

OK

Low specific gravity (voltage) →

- Recharge battery

Charging Current:
0.4 amps/10 hrs

NOTE:

Replace the battery if:

- Battery voltage will not rise to a specific value or bubbles fail to rise even after many hours of charging.
- Sulfation of one or more cells occurs, as indicated by the plates turning white, or an accumulation of material exists in the bottom of the cell.
- Specific gravity readings after a long, slow charge indicate on cell to be lower than the rest.
- Warpage or buckling of plates or insulators is evident.

Charging voltage test:

1. Connect Inductive Tachometer (YU-08036) to ignition lead.
2. Set Pocket Tester (YU-03112) selector to "DC20V" position.
3. Connect tester leads to battery terminals.

Tester (+) lead→(+) terminal
Tester (−) lead→(−) terminal

OK → Replace battery.

4. Start engine and accelerate to about 4,000 r/min.
5. Measure:
   - Charging voltage

12.5～17.5V at 4,000 r/min

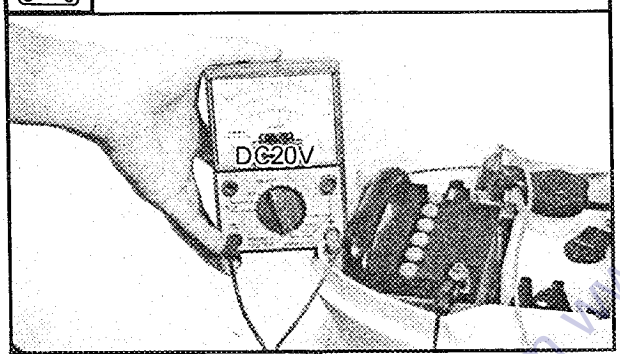

Out of specification

Charging coil resistance test:

1. Disconnect C.D.I. magneto leads.
2. Set Pocket Tester (YU-03112) selector to "Ω×1" position.
3. Connect tester leads to charging coil leads.

Tester (+) lead→White lead
Tester (−) lead→Black lead

4. Measure:
- Charging coil resistance

0.63 ~ 0.77Ω at 20°C (68°F)

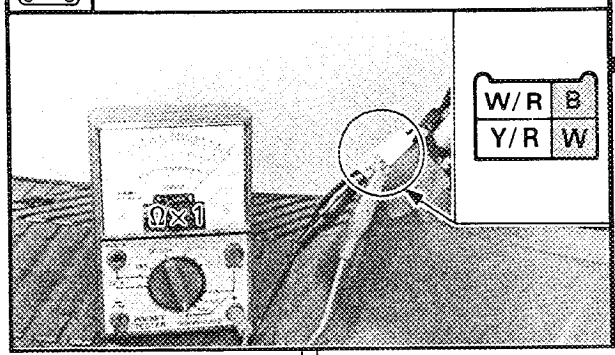

Out of specification → Replace charging coil.

OK ↓

Check entire charging system for connections. Refer to "WIRING DIAGRAM".

Poor connection → Correct.

OK ↓

Replace rectifier/regulator.

LIGHTING SYSTEM

CIRCUIT DIAGRAM

Below circuit diagram shows lighting circuit.

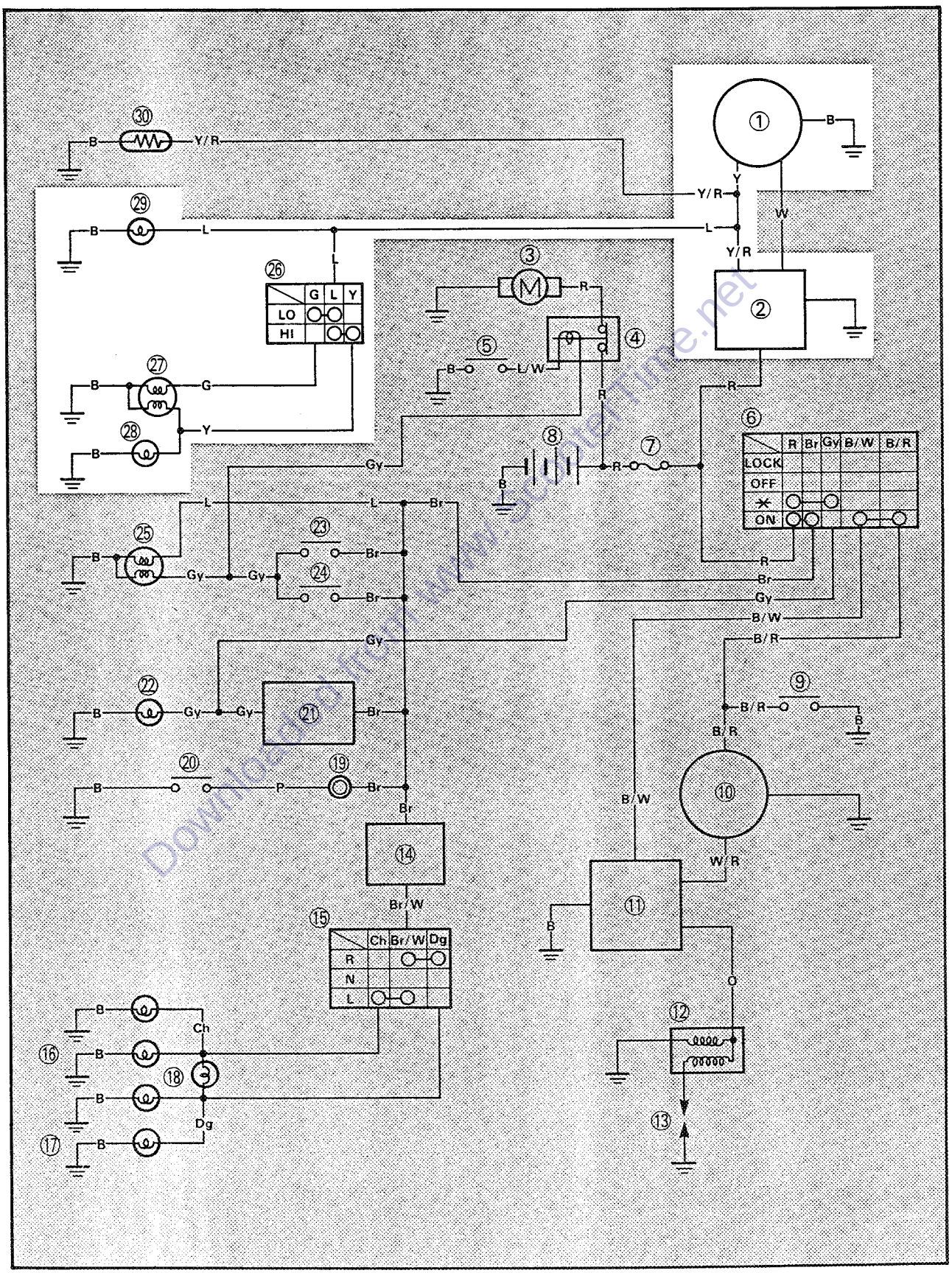

① C.D.I. magneto
(Lighting coil, charging coil)
② Rectifier/Regulator
㉖ "LIGHTS" switch (Dimmer)
㉗ Headlight
㉘ "HIGH BEAM" indicator light
㉙ Meter light

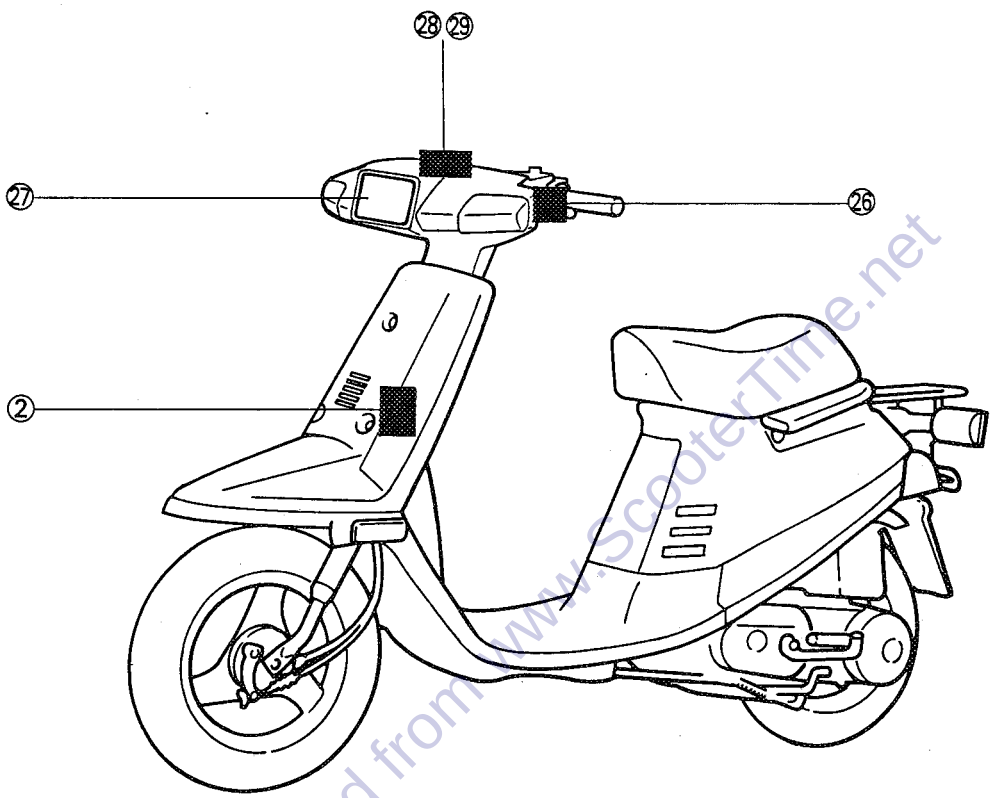

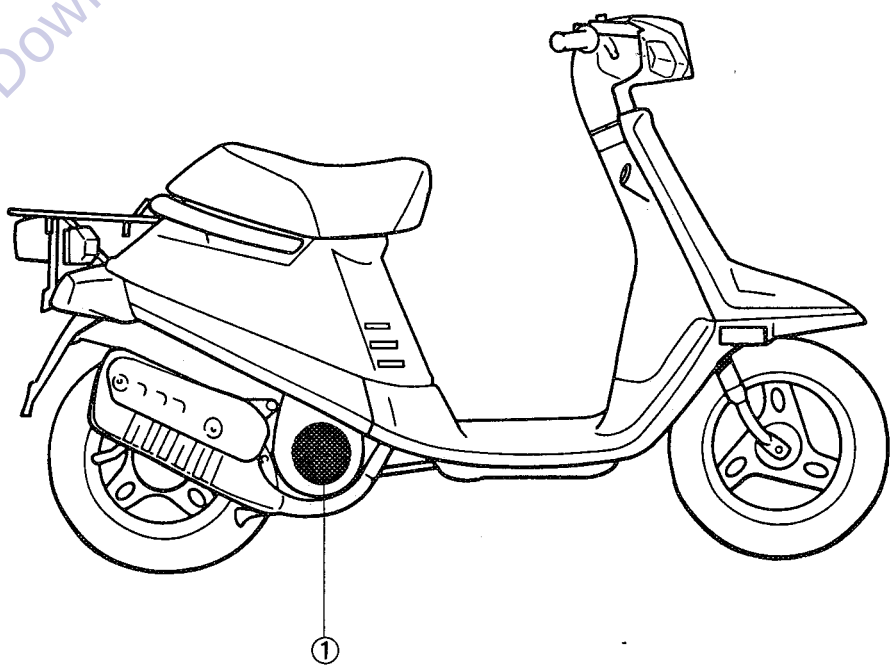

TROUBLESHOOTING CHART

HEADLIGHT DOES NOT COME ON.

Headlight condition check:
1. Remove headlight lens unit.
2. Set Pocket Tester (YU-03112) selector to "Ω×1" position.
3. Connect tester leads to headlight terminals and check it for continuity.

Continuity does not exist on one circuit. → Replace headlight lens unit.

Tester (+) lead→Terminal 1
Tester (−) lead→Terminal 3

Tester (+) lead→Terminal 2
Tester (+) lead→Terminal 3

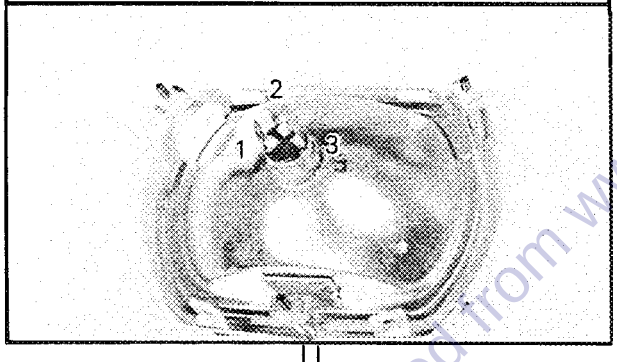

Continuity exists on both circuit.

Lighting voltage test:
1. Set Pocket Tester (YU-03112) Selector to "AC20V" position.
2. Turn "LIGHTS" switch to "HI" position.
3. Connect tester leads to headlight leads.

Tester (+) lead→Yellow lead
Tester (−) lead→Black lead

4. Connect Inductive Tachometer (YU-08036) to ignition lead.
5. Start engine and accelerate to about 4,000 r/min.
6. Measure:
   - Lighting voltage

11.5 ~ 13.5V at 4,000 r/min

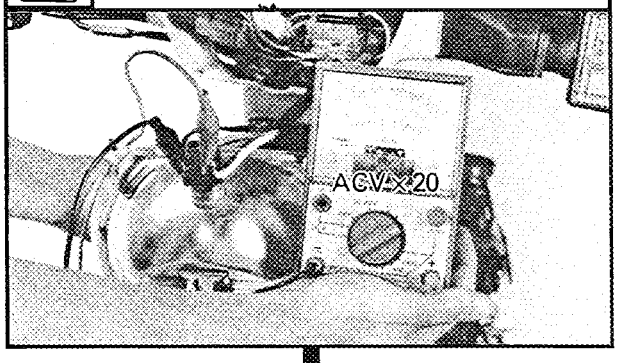

OK → Lighting system is good.

Out of specification ↓

"LIGHTS" switch conduct check:
1. Remove front fender and disconnect left handlebar switch lead.
2. Set Pocket Tester (YU-03112) selector to "Ω × 1" position.
3. Connect tester leads to "LIGHTS" switch leads.

If switch is turned to "LO" position.
Tester (+) lead → Blue lead
Tester (−) lead → Green lead

If switch is turned to "HI" position.
Tester (+) lead → Blue lead
Tester (−) lead → Yellow lead

Continuity does not exist on one circuit. → Replace left handlebar switch.

Continuity exists on both circuits. ↓

Lighting coil resistance test:
1. Disconnect C.D.I. magneto leads.
2. Set Pocket Tester (YU-03112) selector to "Ω×1" position.
3. Connect tester leads to lighting coil leads.

Tester (+) lead→Yellow/Red lead
Tester (−) lead→Black lead

4. Measure:
   - Lighting coil resistance

0.27~0.33Ω at 20°C (68°F)

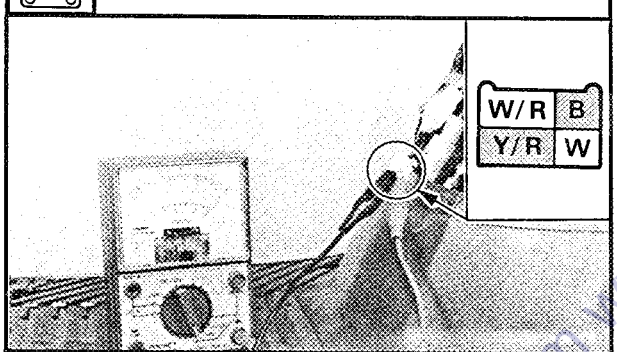

Out of specification → Replace lighting coil.

OK ↓

Check entire lighting system for connections. Refer to "WIRING DIAGRAM".

Poor connection → Correct.

OK ↓

Replace rectifier/regulator.

SIGNAL SYSTEM

CIRCUIT DIAGRAM

Below circuit diagram shows signal circuit.

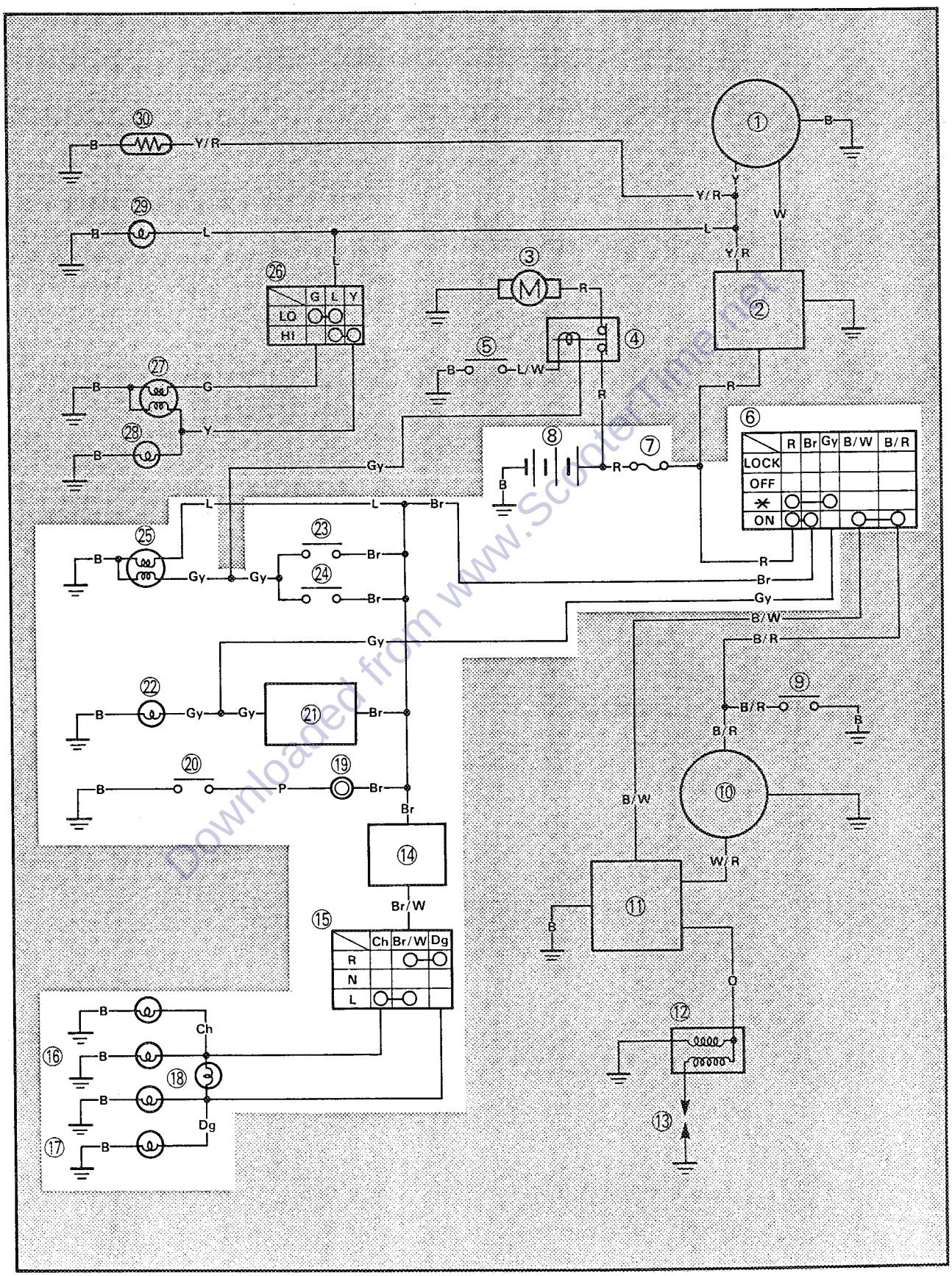

⑥ Main switch
⑦ Fuse
⑧ Battery
⑭ Flasher light relay
⑮ "TURN" switch
⑯ Left flasher light (Front and rear)
⑰ Right flasher light (Front and rear)
⑱ "TURN" indicator light
⑲ Horn
⑳ "HORN" switch
㉑ Oil level gauge
㉒ "OIL" indicator light
㉓ Front brake switch
㉔ Rear brake switch
㉕ Tail/Brake light

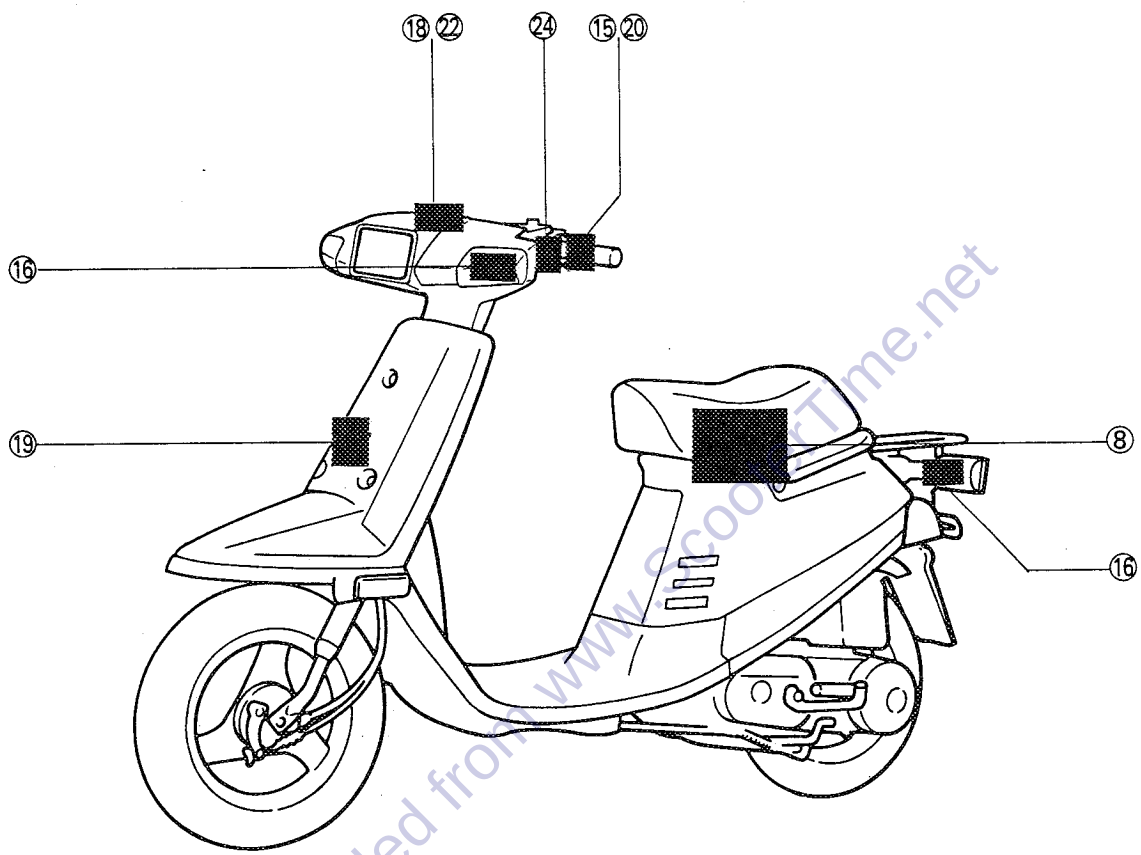

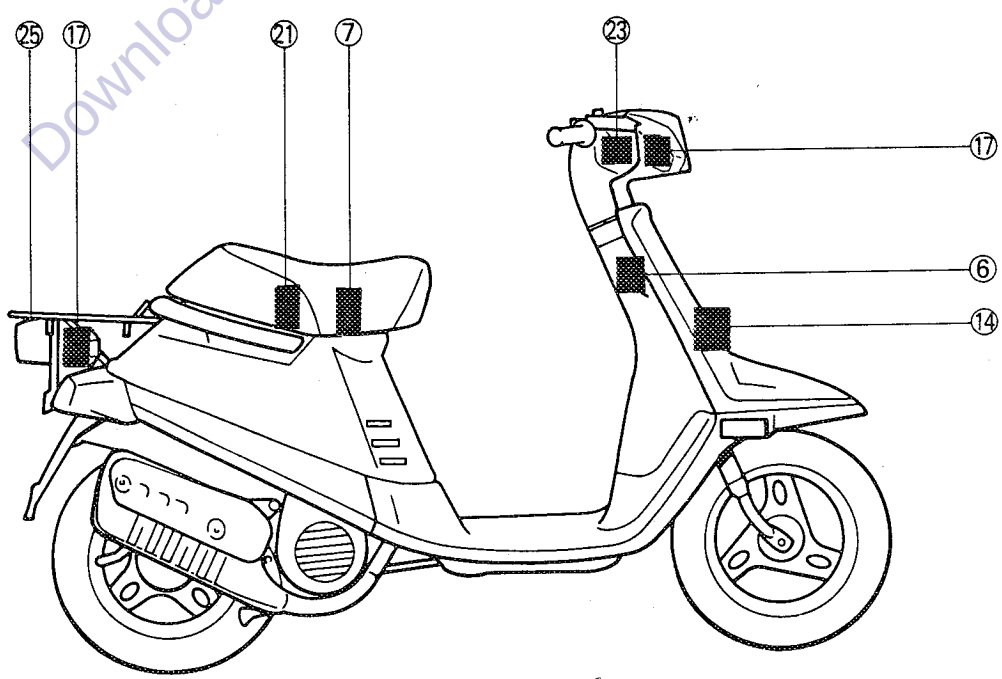

SIGNAL SYSTEM

TROUBLESHOOTING CHART

SIGNAL SYSTEM SHOULD BECOME INOPERATIVE.

Fuse inspection:
1. Remove fuse.
2. Inspect fuse using Pocket Tester (YU-03112).

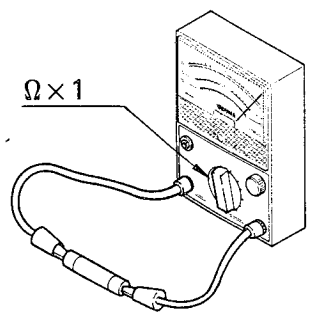

No continuity → • Replace fuse.

Continuity ↓

Battery fluid level inspection:
Fluid level should be between upper ① and lower ② level mark.

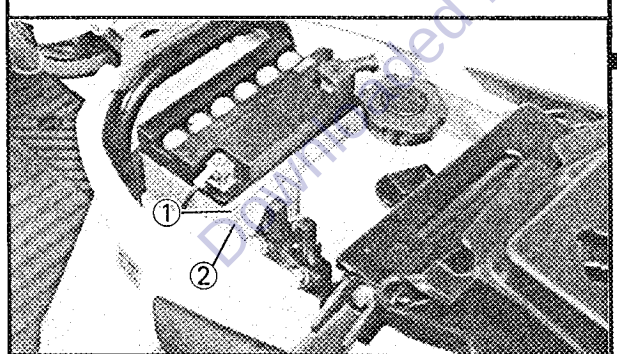

Incorrect → • Refill battery fluid.

CAUTION:

Refill with distilled water only; tap water contains minerals harmful to a battery.

Correct ↓

Check battery terminals.

Dirty or poor connection → • Clean battery terminals using wire brush.

NOTE:

After cleaning terminals, apply grease lightly to both terminals.

• Connect battery leads correctly.

OK ↓

Battery fluid specific gravity inspection:
1. Remove caps.
2. Inspect specific gravity of all cell using Battery Hydrometer.

WARNING:

Battery electrolyte is poisonous and dangerous, causing severe burns, etc. It contains sulfuric acid. Avoid contact with skin, eyes or clothing.
Antidote: EXTERNAL-Flush with water. INTERNAL-Drink large quantities of water or milk. Follow with milk of magnesia, beaten egg, or vegetable oil. Call a physician immediately.
Eyes: Flush with water for 15 minutes and get prompt medical attention. Batteries produce explosive gases. Keep sparks, flame, cigarettes etc., away. Ventilate when charging or using in an enclosed space. Always shield your eyes when working near batteries.
KEEP OUT OF REACH OF CHILDREN.

Specific Gravity:
1.280±0.01 at 20°C (68°F)

If there is not Battery Hydrometer, check battery voltage using Pocket Tester (YU-03112).
1. Remove battery.
2. Set the tester selector to "DC20V" position.
3. Connect tester leads to battery terminals.

Tester (+) lead→(+) terminal
Tester (−) lead→(−) terminal

Battery Voltage:
12V or more

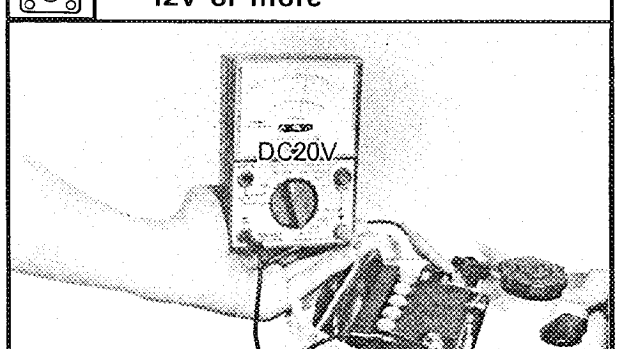

OK

Low specific gravity (voltage)

- Recharge battery.

Charging Current:
0.4 amps/10 hrs

NOTE:
Replace the battery if:
- Battery voltage will not rise to a specific value or bubbles fail to rise even after many hours of charging.
- Sulfation of one or more cells occurs, as indicated by the plates turning white, or an accumulation of material exists in the bottom of the cell.
- Specific gravity readings after a long, slow charge indicate on cell to be lower than the rest.
- Warpage or buckling of plates or insulators is evident.

Main switch conduct check:
1. Disconnect main switch leads.
2. Set Pocket Tester (YU-03112) selector to "Ω×1" position.
3. Connect tester leads to main switch leads (Red lead, Brown lead).

Tester (+) lead→Red lead
Tester (−) lead→Brown lead

4. Turn main switch to "ON" position.

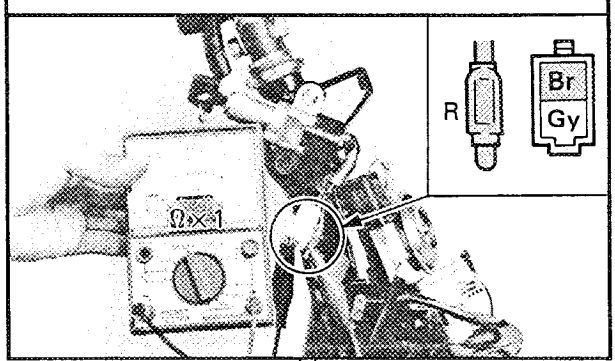

No continuity → Replace main switch.

Continuity ↓

Check bulb conditions of flasher lights, indicator lights and tail/brake light.

Poor condition → Replace bulb(s)

OK ↓

Check entire signal system for connections (Refer to "WIRING DIAGRAM" section.)

Poor connection → Correct.

OK ↓

Check condition of each circuit for signal system (Refer to "SIGNAL SYSTEM TEST AND CHECKS" section.)

Poor condition → Replace poor condition electrical component(s).

SIGNAL SYSTEM TEST AND CHECKS

NOTE:

The battery provides power for operation of the horn, flasher lights, indicator light and brake light. If none of the above operates, always check the battery voltage before proceeding further. Low battery voltage indicates either a faulty battery, low battery electrolyte, or a defective charging system. See "CHARGING SYSTEM" for checks of the battery and charging system. Also, check the fuse condition. Replace the fuse if necessary.

1. Brake light does not work

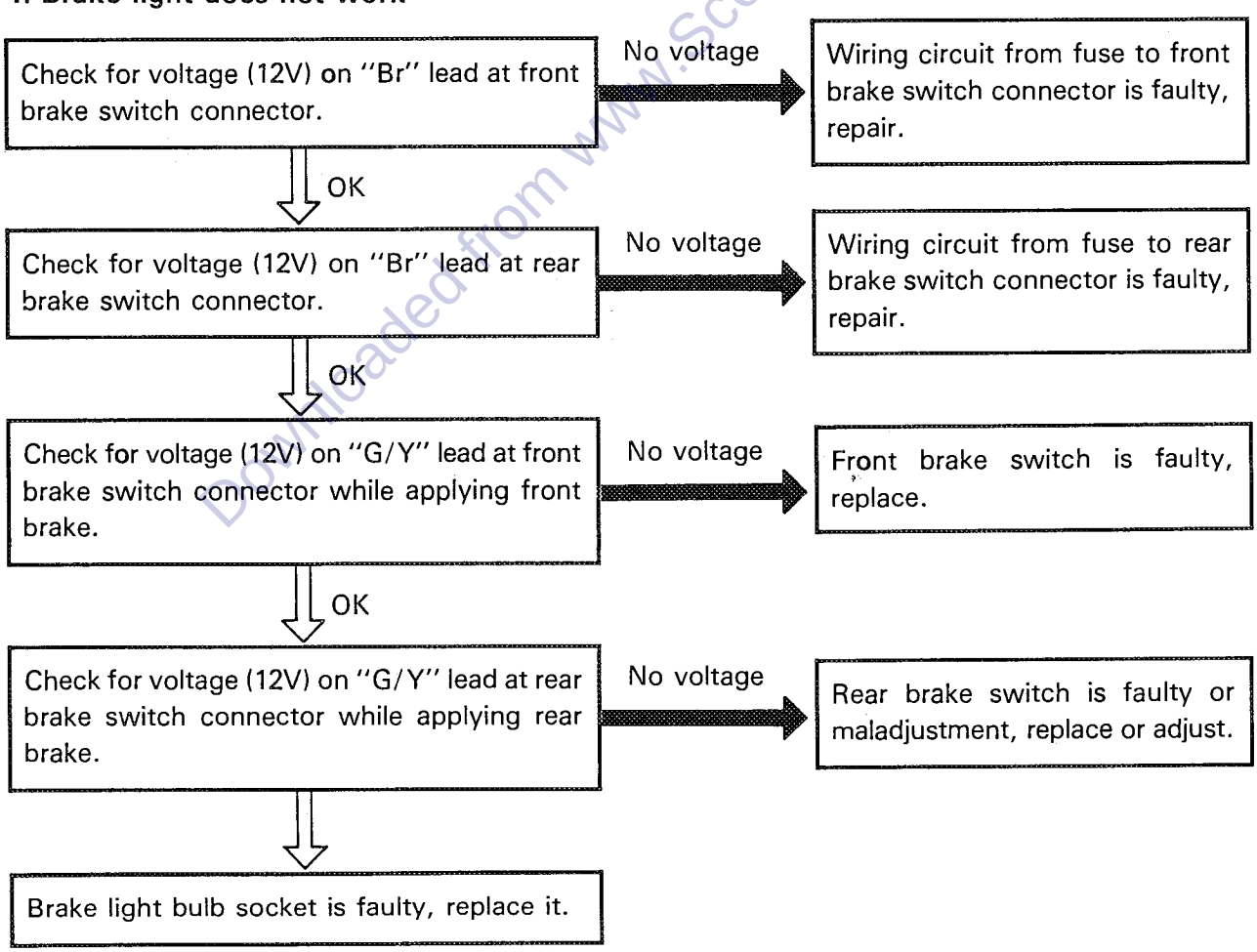

2. Flasher lights (left and/or right) do not work

Check for voltage (12V) on "Br" lead at flasher relay terminal.
- No voltage → Wiring circuit from fuse to flasher relay terminal is faulty, repair.
- OK ↓

Check for voltage (12V) on "Br/W" lead at flasher relay terminal.
- No voltage → Flasher relay is faulty, replace.
- OK ↓

Check for voltage (12V) on "Br/W" lead at "TURN" switch connector.
- No voltage → Wiring circuit from flasher relay to "TURN" switch is faulty, repair.
- OK ↓

Check for voltage (12V) on "Ch" and/or "Dg" lead at "TURN" switch connector.
- No voltage → "TURN" switch is faulty replace.
- OK ↓

Flasher light bulb socket is faulty, replace it.

3. Horn does not work

Check for voltage (12V) on "Br" lead at horn terminal.
- No voltage → Wiring circuit from fuse to horn terminal is faulty, repair.
- OK ↓

Check for voltage (12V) on "P" lead at "HORN" switch connector.
- No voltage → Horn is faulty, replace.
- OK ↓

Check for continuity of "HORN" switch, while pushing it.
- No continuity → "HORN" switch is faulty, replace.
- Continuity ↓

Adjust horn, replace it damage.

4. "OIL" indicator light does not work

Check for voltage (12V) on "Br" lead at oil level gauge connector.
→ No voltage → Wiring circuit from fuse to oil level gauge connector is faulty, repair.
↓ OK

Check for voltage (12V) on "Gy" lead at oil level gauge connector.
→ No voltage → Check for condition of oil level gauge. If oil level gauge is poor condition, replace it.
↓ OK

Check for voltage (12V) on "B" lead at "OIL" indicator light connector.
→ No voltage → Indicator light bulb socket is faulty, replace it.

[Oil level gauge check]

1. Disconnect:
   - Oil level gauge leads
2. Remove:
   - Oil level gauge
3. Connect:
   - Pocket Tester (YU-03112)
   Set the tester selector to "Ω×1" position.
4. Check:
   - Oil level gauge conduct
   Refer to following table
   Not per result→Replace.

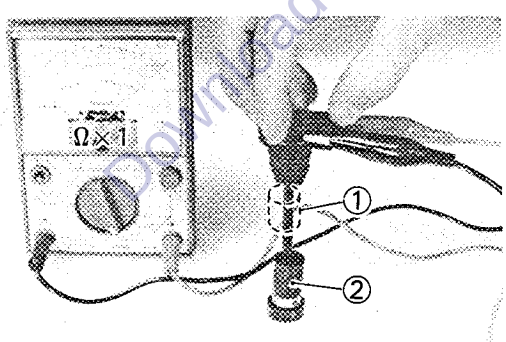

Float position	Good
Up ①	No continuity
Down ②	Continuity

5. Taillight does not work

Check for voltage (12V) on "Br" lead at taillight connector.
→ No voltage → Wiring circuit from fuse to taillight connector is faulty, repair.
↓ OK

Taillight bulb socket is faulty, replace it.

AUTO CHOKE SYSTEM

CIRCUIT DIAGRAM

Below circuit diagram shows auto choke circuit.

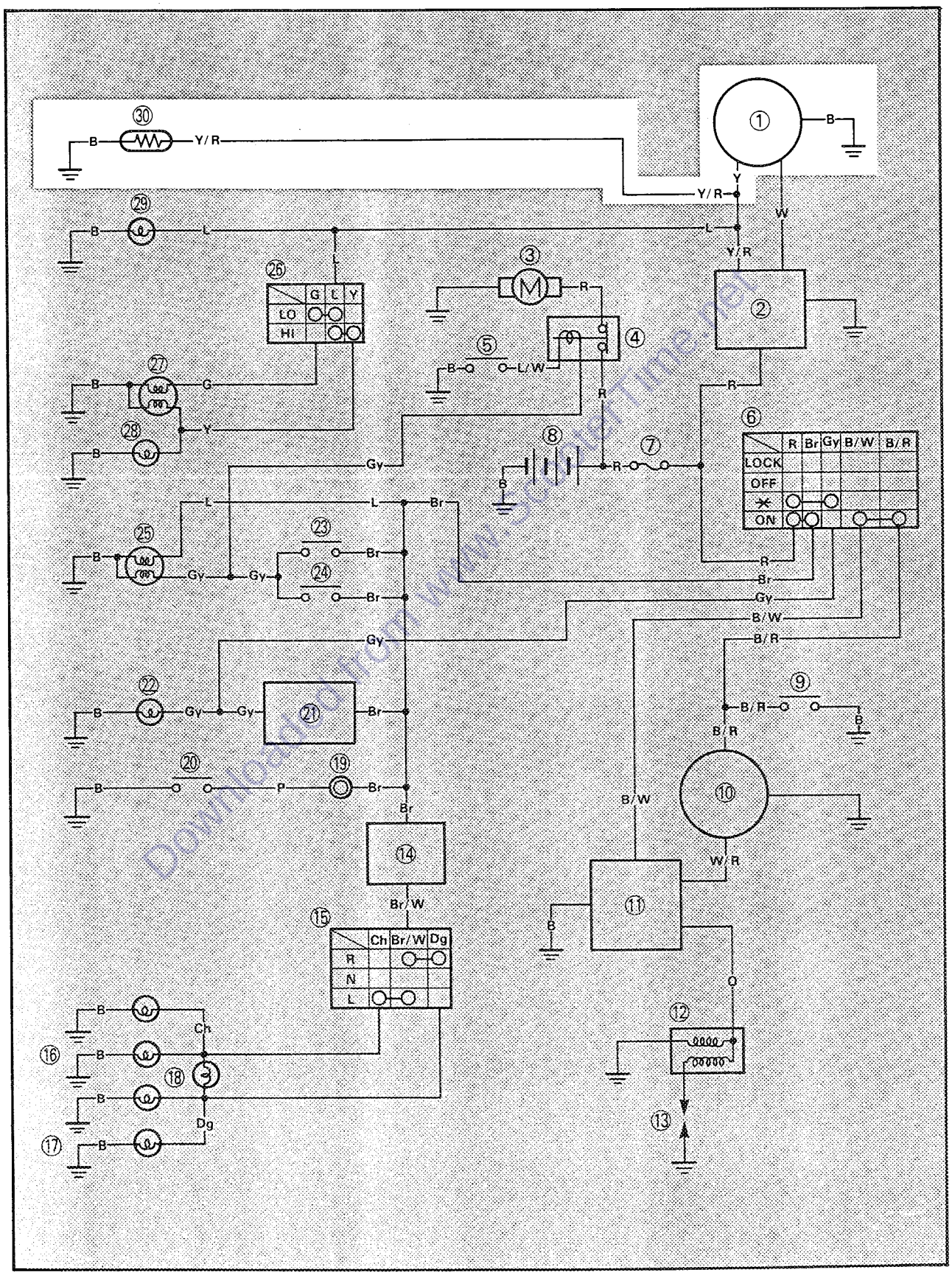

① C.D.I. magneto
(Charging coil, lighting coil)
㉚ Auto choke unit

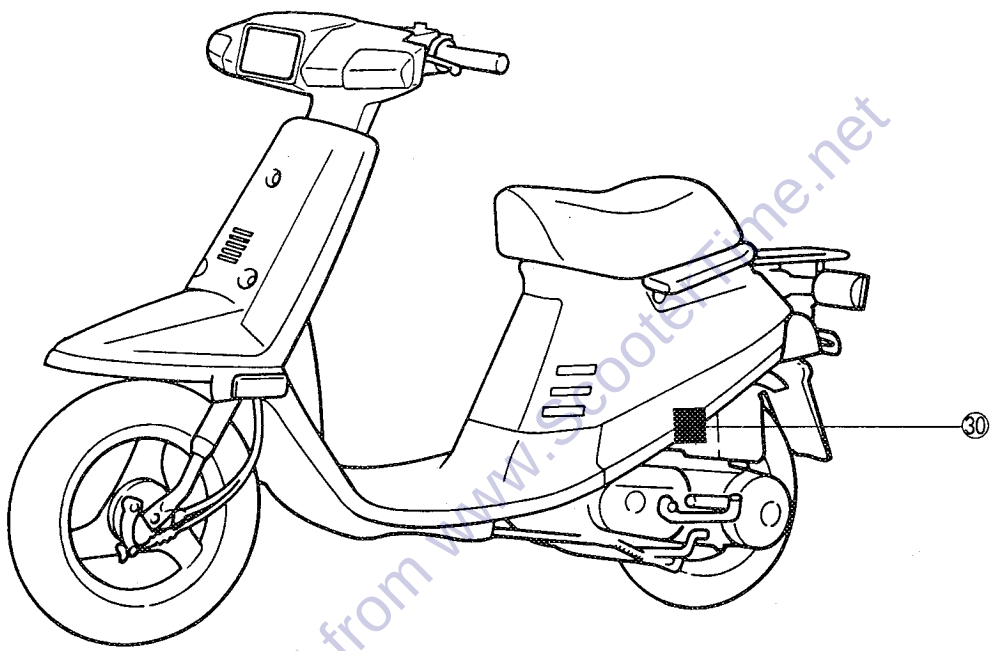

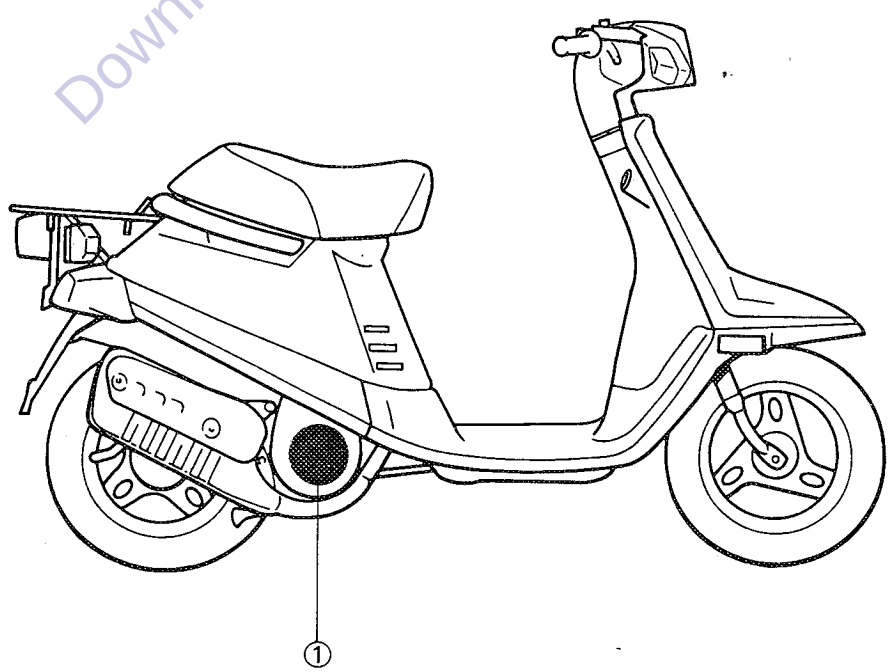

AUTO CHOKE SYSTEM

TROUBLESHOOTING CHART

AUTO CHOKE SYSTEM DOES NOT OPERATE.

Lighting coil resistance test:

1. Disconnect C.D.I. magneto leads.
2. Set Pocket Tester (YU-03112) selector to "Ω × 1" position.
3. Connect tester leads to lighting coil leads.

Tester (+) lead → Yellow/Red lead
Tester (−) lead → Black lead

Out of specification → Replace lighting coil.

4. Measure:
   - Lighting coil resistance

0.27 ~ 0.33Ω at 20°C (68°F)

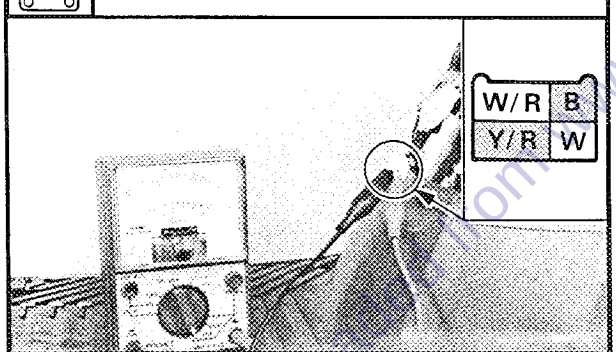

OK

Check entire auto choke system for connections.
Refer to "WIRING DIAGRAM".

Poor connection → Correct.

OK

Check auto choke condition.
Refer to "AUTO CHOKE UNIT TEST" section.

AUTO CHOKE UNIT TEST

1. Remove:
   - Tail cover
   Refer to "CHAPTER 2 — TAIL COVER" section.

2. Remove:
   - Air cleaner case

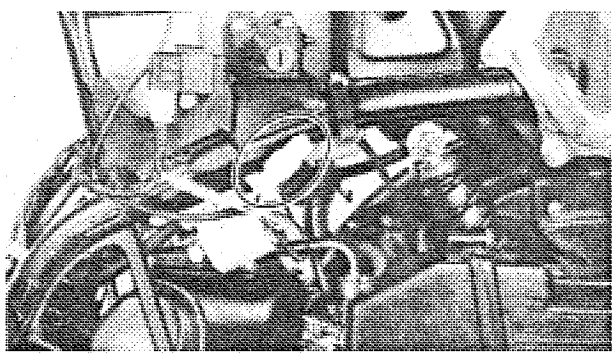

3. Disconnect:
   - Auto choke unit leads

4. Connect:
   - Pocket tester (YU-03112)
   Set the tester selector to "Ω × 1" position.

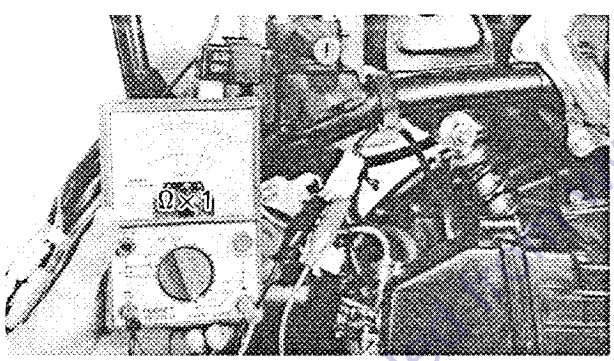

5. Measure:
   - Auto choke unit resistance
   Out of specification → Replace.

	2 ~ 6Ω at 20°C (68°F)

CHAPTER 7
APPENDICES

APPENDICES

SPECIFICATIONS

GENERAL SPECIFICATIONS

Model	CE50T
Model Code Number	2UG
Vehicle Identification Number	JYA2UG00*HA720101
Engine Starting Number	14T-720101
Dimensions: Overall Length Overall Width Overall Height Seat Height Wheelbase Minimum Ground Clearance	 1,560 mm (61.4 in) 620 mm (24.4 in) 972 mm (38.3 in) 690 mm (27.1 in) 1,085 mm (42.7 in) 100 mm (3.9 in)
Basic Weight: With Oil and Full Fuel Tank	 58.5 kg (129 lb)
Minimum Turning Radius	1600 mm (63 in)
Engine: Engine Type Cylinder Arrangement Displacement Bore × Stroke Compression Ratio Starting System	 Air cooled 2-stroke, gasoline torque induction Single cylinder, Forward inclined 49 cm^3 40.0 × 39.2 mm (1.57 × 1.54 in) 7.2:1 Electric and Kick Starter
Lubrication System	Separate lubrication (Yamaha Autolube)
Oil Type or Grade: Engine Oil Transmission Oil	 Yamalube 2-cycle oil or Air cooled 2-stroke engine oil Yamalube 4-cycle oil or SAE 10W30 type SE motor oil or GL gear oil
Oil Capacity: Oil Tank (Engine Oil) Transmission Oil Periodic Oil Change Total Amount	 0.8 L (0.70 Imp qt, 0.84 US qt) 0.10 L (0.09 Imp qt, 0.11 US qt) 0.11 L (0.10 Imp qt, 0.12 US qt)
Air Filter	Wet type element
Fuel: Type Tank Capacity	 Regular gasoline 2.9 L (0.64 Imp gal, 0.77 US gal)

Model	CE50T
Carburetor:	
Type/Manufacturer	Y12P/TEIKEI KIKAKI
Spark Plug:	
Type/Manufacturer	BPR6HS/NGK
Gap	0.9~1.0 mm (0.036~0.039 in)
Clutch Type	Dry, Centrifugal Automatic
Transmission:	
Primary Reduction System	Spur gear
Primary Reduction Ratio	52/14 (3.714)
Secondary Reduction System	Spur gear
Secondary Reduction Ratio	36/12 (3.000)
Transmission Type	V-belt
Operation	Auto matic
Chassis:	
Frame Type	Steel Tube Underbone
Caster Angle	25°
Trail	62 mm (2.44 in)
Tire:	
Size (F)	2.75-10-4PR
Size (R)	2.75-10-4PR
Tire Pressure (Cold tire):	
Front	125 kPa (1.25 kg/cm^2, 18 psi)
Rear	225 kPa (2.25 kg/cm^2, 32 psi)
Brake:	
Front Brake Type	Drum brake
Operation	Right hand operation
Rear Brake Type	Drum brake
Operation	Left hand operation
Suspension:	
Front Suspension	Telescopic Fork
Rear Suspension	Unit Swing
Shock Absorber:	
Rear Shock Absorber	Coil Spring/Oil Damper
Wheel Travel:	
Front Wheel Travel	44 mm (1.73 in)
Rear Wheel Travel	49 mm (1.93 in)

SPECIFICATION

Model	CE50T
Electrical:	
Ignition System	CDI
Generator System	Flywheel magneto
Battery Type or Model	GM4-3B
Battery Capacity	12V 4AH
Headlight Type:	Shealed Beam
Bulb Wattege × Quantity:	
Headlight	12V 25W/25W × 1
Tail/Brake light	12V 5W/21W × 1
Flasher light	12V 10W × 4
Licence Light	12V 5W × 1
Meter light	12V 3.4W × 1
Indicator Light Wattage × Quantity:	
"TURN"	12V 1.7W × 1
"HIGH BEAM"	12V 1.7W × 1
"OIL"	12V 3.4W × 1

MAINTENANCE SPECIFICATIONS
Engine

Model	CE50T
Cylinder Head: Warp Limit 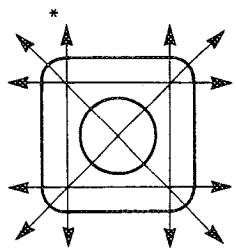	0.02 mm (0.0008 in) *Lines indicate straightedge measurement
Cylinder: Bore Size <Limit> Taper Limit Out of Round Limit	 40.0 mm (1.575 in) 40.1 mm (1.579 in) 0.05 mm (0.002 in) 0.01 mm (0.0004 in)
Piston: Piston Size Measuring Point* 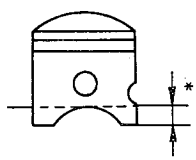 Piston Clearance Oversize 1st 2nd	 40.0 mm (1.575 in) 5 mm (0.2 in) 0.034~0.047 mm (0.0013~0.0018 in) 40.25 mm (1.585 in) 40.50 mm (1.594 in)
Piston Ring: Sectional Sketch (B×T) 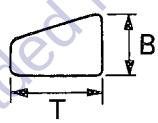 Top Ring 2nd Ring End Gap (Installed) Top Ring 2nd Ring Side Clearance (Installed) Top Ring 2nd Ring	 1.2×1.6 mm (0.047×0.063 in) 1.2×1.6 mm (0.047×0.063 in) 0.15~0.30 mm (0.006~0.012 in) 0.15~0.30 mm (0.006~0.012 in) 0.03~0.05 mm (0.0012~0.0020 in) 0.03~0.05 mm (0.0012~0.0020 in)
Crankshaft: 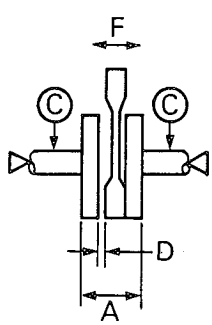 Crank Width "A" Run Out Limit "C" Connecting Rod Big End Side Clearance "D" Small End Free Play "F"	 37.90~37.95 mm (1.492~1.494 in) 0.03 mm (0.0012 in) 0.2~0.5 mm (0.008~0.020 in) 0.4~0.8 mm (0.015~0.031 in)

Model		CE50T
Automatic Centrifugal Clutch:		
Shoe Thickness		4.0 mm (0.16 in)
<Wear Limit>		<2.5 mm (0.10 in)>
Clutch Spring Free Length		109.6 mm (4.31 in)
<Limit>		<94.0 mm (3.70 in)>
Clutch Housing Inside Diameter		105.0 mm (4.13 in)
<Wear Limit>		<105.4 mm (4.15 in)>
Clutch-In Revolution		2,300~2,700 r/min
Clutch-Stall Revolution		3,700~4,300 r/min
V-Belt:		
Width		15 mm (0.59 in)
<Wear Limit>		<13.5 mm (0.53 in)>
Transmission:		
Main Axle Runout Limit		0.08 mm (0.003 in)
Drive Axle Runout Limit		0.08 mm (0.003 in)
Kick Starter:		
Type		Ratchet Type
Kick Clip Tension		250~300 g (8.83~10.6 oz)
Carburetor:		
I.D. Mark		1UV00
Main jet	(M.J.)	#82
Jet Needle-clip Position	(J.N.)	3S30-4/5
Main Air Jet	(M.A.J.)	2.0
Cutaway	(C.A.)	3.0
Pilot Jet	(P.J.)	#42
Pilot Ait Jet	(P.A.J.)	ϕ1.04
Valve Seat Size	(V.S.)	1.5
Starter Jet	(G.S.)	#46
Float Height		15.0~17.0 mm (0.59~0.67 in)
Engine Idling speed		1,500~2,100 r/min
Reed Valve:		
Thickness		0.15 mm (0.006 in)
Valve Stopper Height		3.0~3.4 mm (0.12~0.13 in)
Reed Valve Clearance		Less than 0.2 mm (0.008 in)
Lubrication System:		
Autolube Pump		
Minimum Stroke		0.10~0.15 mm (0.004~0.006 in)
Maximum Stroke		0.55~0.65 mm (0.022~0.026 in)
Pulley Adjusting Mark		At idle
		ⓐ: 0.0~1.0 mm (0.0~0.039 in)/at idle

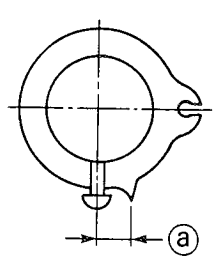

Tightening Torque

Part to be tightened	Thread size	Q'ty	Tightening torque			Remarks
			Nm	m•kg	ft•lb	
Spark plug	M14×1.25	1	20	2.0	14	
Cylinder head	M 6×1.0	4	10	1.0	7.2	
Stud bolt	M 6×1.0	4	10	1.0	7.2	
Startor assembly	M 6×1.0	2	8	0.8	5.8	
C.D.I. magneto	M12×1.25	1	43	4.3	31	
Air shroud	M 6×1.0	3	8	0.8	5.8	
Fan cover	M 6×1.0	2	8	0.8	5.8	
Fan	M 6×1.0	2	8	0.8	5.8	
Autolube pump	M 5×0.8	2	4	0.4	2.9	
Reed valve (carburetor joint)	M 6×1.0	4	8	0.8	5.8	
Air cleaner Case	M 6×1.0	2	8	0.8	5.8	
Exhaust pipe	M 6×1.0	2	8	0.8	5.8	
Muffler	M 8×1.25	2	27	2.7	19	
Muffler protector	M 6×1.0	2	8	0.8	5.8	LT
Crankcase	M 6×1.0	6	8	0.8	5.8	
Transmission case cover	M 6×1.0	5	8	0.8	5.8	
Crankcase cover	M 6×1.0	10	8	0.8	5.8	
Transmission oil drain bolt	M 8×1.25	1	18	1.8	13	
Autolube pump cover	M 6×1.0	2	8	0.8	5.8	
Stay (starter clutch)	M 6×1.0	3	8	0.8	5.8	
Kick crank	M 6×1.0	1	10	1.0	7.2	
Clutch	M28×1.0	1	50	5.0	36	
Clutch housing	M10×1.0	1	40	4.0	29	
Primary sheave	M10×1.25	1	30	3.0	22	
Idle gear plate	M 6×1.0	2	8	0.8	5.8	
Oil seal stopper plate	M 6×1.0	1	13	1.3	9.4	

Chassis

Model	CE50T
Steering System:	
Steering Bearing Type	Ball bearing
No./Size of Steel Balls	
Upper	5/32 in/26 pcs
Lower	5/32 in/26 pcs
Front Suspension:	
Front Fork Travel	48.6 mm (1.91 in)
Fork spring Free Length	92 mm (3.62 in)
<Limit>	<87 mm (3.42 in)>
Spring Rate (K1)	9.55 N/mm (0.974 kg/mm, 53.6 lb/in)
Stroke	0.0~48.6 mm (0.0~1.91 in)
Optional Spring	No.
Rear Suspension:	
Shock absorber Travel	45 mm (1.77 in)
Spring Free Length	187.5 mm (7.38 in)
Spring Fitting Length	182.5 (7.18 in)
Spring Rate (K1)	37.2 N/mm (3.8 kg/mm, 209.3 lb/in)
(K2)	48.1 N/mm (4.9 kg/mm 269.9 lb/in)
(K3)	72.6 N/mm (7.4 kg/mm 407.6 lb/in)
Stroke (K1)	0.0~25 mm (0.0~0.98 in)
(K2)	25~40 mm (0.98~1.57 in)
(K3)	40~45 mm (1.57~1.77 in)
Optional Spring	No.
Wheel:	
Front Wheel Type	Disc wheel
Rear Wheel Type	Disc wheel
Front Rim Size/Material	1.50×10 DC/Steel
Rear Rim Size/Material	1.50×10 DC/Steel
Rim Runout Limit	
Vertical	2.0 mm (0.08 in)
Lateral	2.0 mm (0.08 in)
Front Drum Brake:	
Type	Leading, Trailing
Drum Inside Diameter	80.0 mm (3.15 in)
<Wear Limit>	<80.5 mm (3.17 in)>
Lining Thickness	3.5 mm (0.14 in)
<Wear Limit>	<2.0 mm (0.08 in)>
Rear Drum Brake:	
Type	Leading, Trailing
Drum Inside Diameter	95.0 mm (3.74 in)
<Wear Limit>	<95.5 mm (3.76 in)>
Lining Thickness	3.0 mm (0.12 in)
<Wear Limit>	<2.0 mm (0.08 in)>

Tightening Torque

Part to be tightened	Thread size	Q'ty	Tightening torque			Remarks
			Nm	m•kg	ft•lb	
Frame and Engine bracket	M10×1.25	2	42	4.2	30	
Engine bracket and Engine	M10×1.25	1	42	4.2	30	
Rear Suspension (Upper)	M10×1.25	1	32	3.2	23	
(Lower)	M 8×1.25	1	17	1.7	12	
Handlebar and Steering column	M 8×1.25	1	29	2.9	21	
Ring nut (Steering column)	M25	1	30	3.0	22	
Front wheel axle	M10×1.25	1	35	3.5	25	
Front brake cam lever	M 5×0.8	1	4	0.4	2.9	
Rear brake cable holder	M 6×1.0	1	7	0.7	5.1	
Rear brake cam lever	M 5×0.8	1	6	0.6	4.3	
Rear wheel axle	M14×1.5	1	93	9.3	67	
Rear brake shoe plate	M 8×1.25	3	18	1.8	13	
Rear stay	M 6×1.0	4	10	1.0	7.2	
Seat bracket and seat	M 6×1.0	2	7	0.7	5.1	
Rear Carrier	M 6×1.0	4	7	0.7	5.1	

Electrical

Model	CE50T
Voltage:	12V
Ignition System: Ignition Timing (B.T.D.C.) Advancer Type	 18°/5,000 r/min Electrical
C.D.I.: C.D.I. Unit-Model/Manufacturer	 24L—MO/YAMAHA
Ignition Coil: Model/Manufacturer Primary Winding Resistance Secondary Winding Resistance	 2EX/YAMAHA 0.21～0.25Ω at 20°C (68°F) 4.5～6.7kΩ at 20°C (68°F)
Charging System/Type:	Flywheel Magneto
C.D.I. Magneto: Model/Manufacturer Pickup Coil Resistance (Color) Charging Voltage Lighting Voltage Source Coil Resistance (Color) Charging Coil Resistance (Color) Lighting Coil Resistance (Color)	 F 1HH/YAMAHA 27～33Ω at 20°C (68°F) (White/Red—Black) 13.0～17.5V at 4,000 r/min 11.5～13.5V at 4,000 r/min 216～264Ω at 20°C (68°F) (Black/Red—Black) 0.63～0.77Ω at 20°C (68°F) (White—Black) 0.27～0.33Ω at 20°C (68°F) (Yellow/Red—Black)

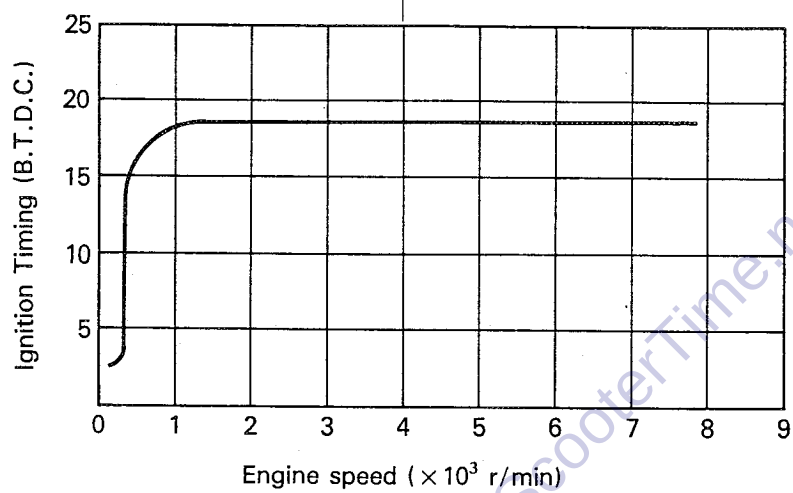

Model	CE50T	
Voltage Regulator:		
Type	Semi conductor short circuit type	
Model/Manufacturer	EHU-01TR05/MATSUSHITA	
No Load Regulated Voltage	13.5～14.5V	
Rectifier:		
Model/Manufacturer	EHU-01TR15/MATSUSHITA	
Capacity	4A	
Withstand Voltage	240V	
Battery:		
Capacity	12V, 4AH	
Specific Gravity	1.280	
Starter Motor:		
Model	DA5AG	2EX-81800-M0
Manufacturer	NIPPON DENSO	YAMAHA
Out Put	0.15 kW	0.14 kW
Armature Coil Resistance	0.08～0.10Ω	0.08～0.10Ω
Brush Length	5.5 mm (0.22 in)	3.9 mm (0.15 in)
<Wear Limit>	<2.5 mm 0.10 in)>	<0.9 mm (0.03 in)>
Commutator Diameter	15.5 mm (0.61 in)	15.8 mm (0.62 in)
<Wear Limit>	<14.5 mm (0.57 in)>	<14.8 mm (0.58 in)>
Mica Undercut	1.0 mm (0.039 in)	1.15 mm (0.045 in)
Starter Relay:		
Model/Manufacturer	27V/TATEISHI	
Amperage Rating	20A	
Coil Resistance	54～66Ω	
Horn:		
Type/Quantity	Plain type	
Model/Manufacturer	GF-12/NIKKO	
Maximum Amperage	1.5A	
Flasher Relay:		
Type	Condenser type	
Model/Manufacturer	FZ222SD/NIPPON DENSO	
Self Cancelling Device	No	
Flasher Frequency	60～120 cycle/min	
Wattage	10W×2+3.4W	
Circuit Breaker:		
Type	Fuse	
Amperage for Individual Circuit×Quantity		
Main	7A×1	

GENERAL TORQUE SPECIFICATIONS

This chart specifies torque for standard fasteners with standard I.S.O. pitch threads. Torque specifications for special components or assemblies are included in the applicable sections of this book. To avoid warpage, tighten multi-fastener assemblies in a crisscross fashion, in progressive stages, until full torque is reached. Unless otherwise specified, torque specifications call for clean, dry threads. Components should be at room temperature.

A (Nut)	B (Bolt)	General torque specifications		
		Nm	m•kg	ft•lb
10 mm	6 mm	6	0.6	4.3
12 mm	8 mm	15	1.5	11
14 mm	10 mm	30	3.0	22
17 mm	12 mm	55	5.5	40
19 mm	14 mm	85	8.5	61
22 mm	16 mm	130	13.0	94

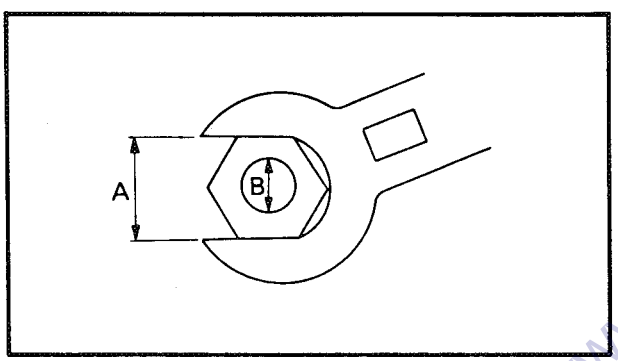

A: Distance cross flats
B: Outside thread diameter

DEFINITION OF UNITS

Unit	Read	Definition	Measure
mm cm	millimeter centimeter	10^{-3}meter 10^{-2}meter	Length Length
kg	kilogram	10^3gram	Weight
N	Newton	1 kg × m/sec^2	Force
Nm m•kg	Newton meter Meter kilogram	N × m m × kg	Torque Torque
Pa N/mm	Pascal Newton per millimeter	N/m^2 N/mm	Pressure Spring rate
L cm^3	Liter Cubic centimeter	—	Volume or Capacity
r/min	Rotation per minute	—	Engine Speed

CABLE ROUTING

① Main switch
② Leg shield bracket
③ Rear brake cable
④ Throttle cable
⑤ Carrier stay 2
⑥ Horn
⑦ Rectifier/Regulator

A Route along left side of leg shield bracket and frame.
B Route wire harness along left side of leg shield bracket and then, along left side of frame down-tube.
C Wire harness should be on the left side.

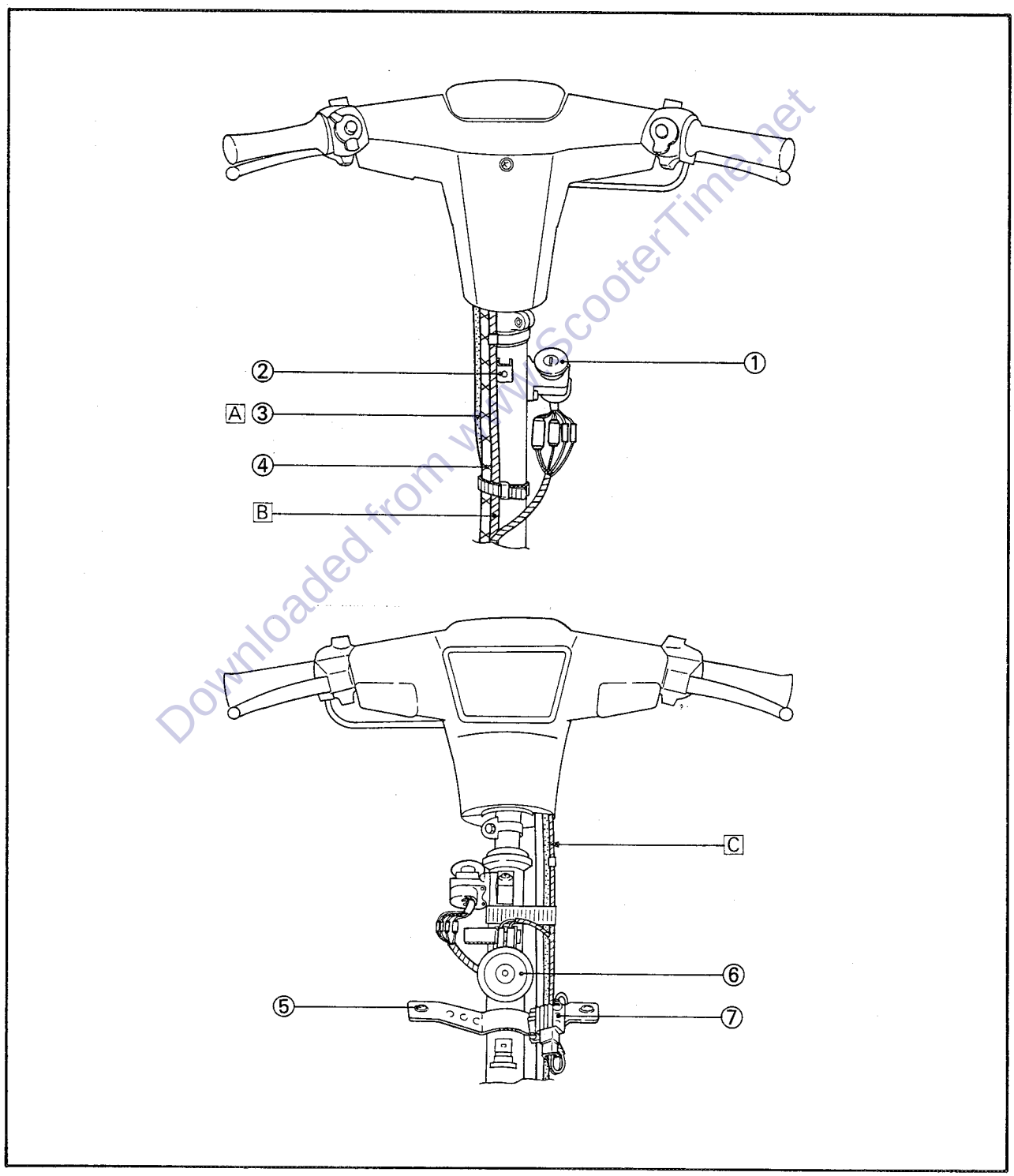

CABLE ROUTING

① Throttle cable
② Rear brake cable
③ Wire cylinder ass'y
④ Oil level gauge
⑤ Breather hose
⑥ Band

A It should be firmly installed on the engine protector.
B Route wire harness between rear stay and fuel tank.
C Insert fuse case (wire harness assembly) into holder (integrated with battery case).
D Route wire harness over frame.
E Route breather hose along engine protector slit.
F Route wire harness under back stay.

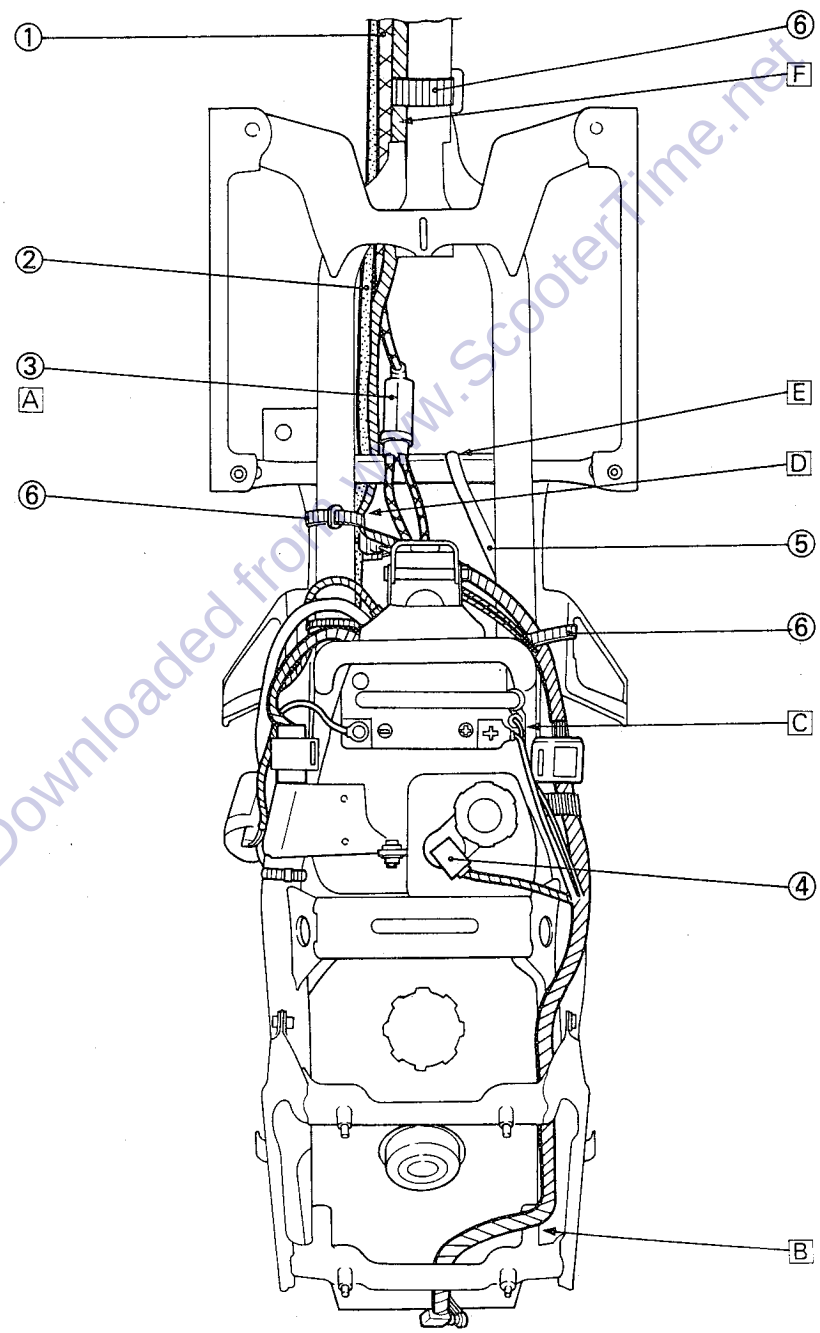

① Inner fender
② C.D.I. unit
③ Ignition coil
④ Fuel pipe (tank to cock)
⑤ Clamp
⑥ Band
⑦ Auto choke unit lead

A Pass meter cable and brake cable through the window in inner fender.
B Meter cable and front brake cable should be free of twists.
C Clamp rear brake cable.
D Be sure the casing cap of brake cable is completely in crankcase.
E Clamp wire harness only.

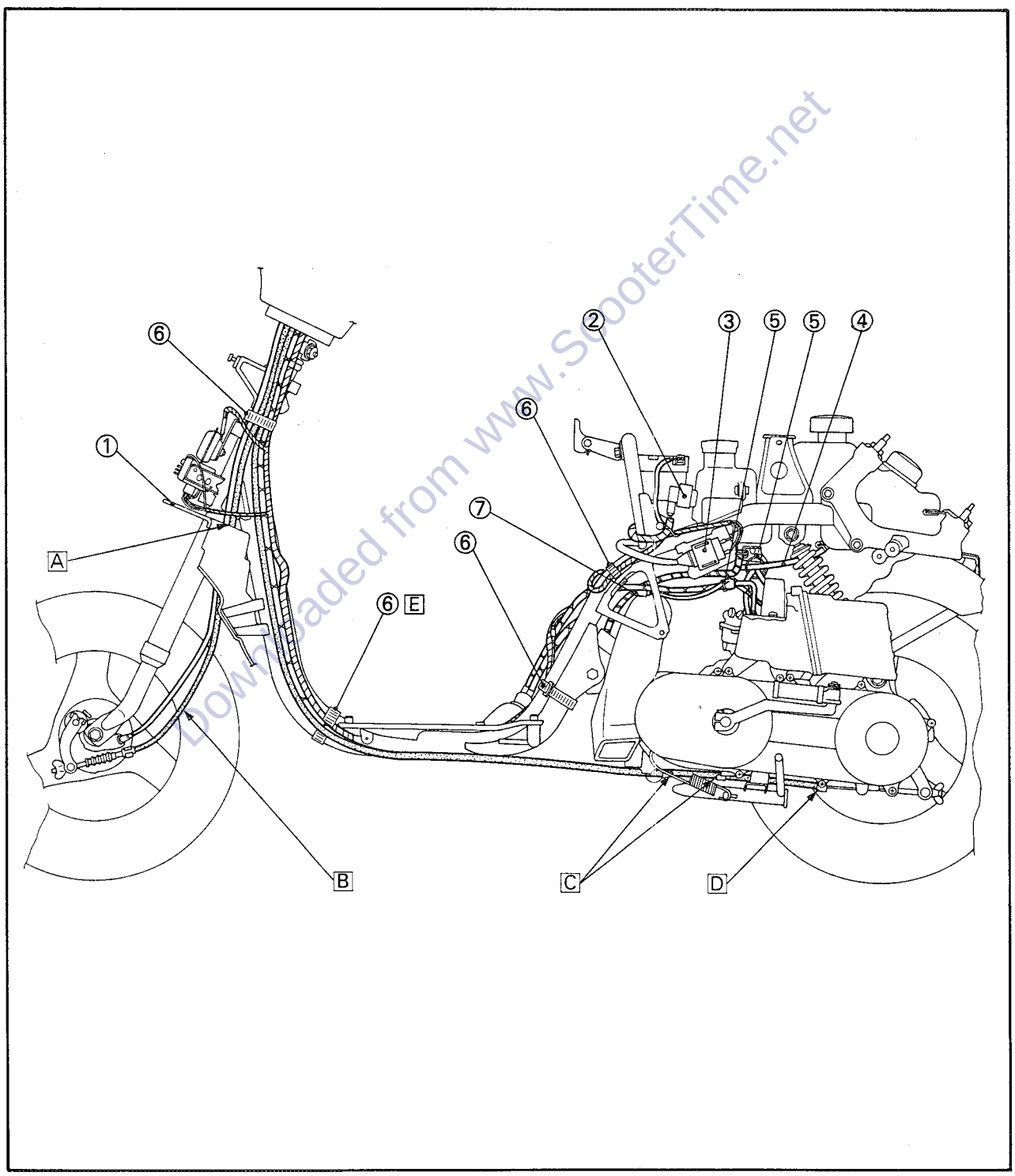

CABLE ROUTING

① Main switch
② Oil pipe
③ Fuel tank
④ Fuel cock
⑤ Oil tank
⑥ Starter relay
⑦ Clamp
⑧ Band

A Push the projecting portion of clamp into the mounting hole on the stay side.

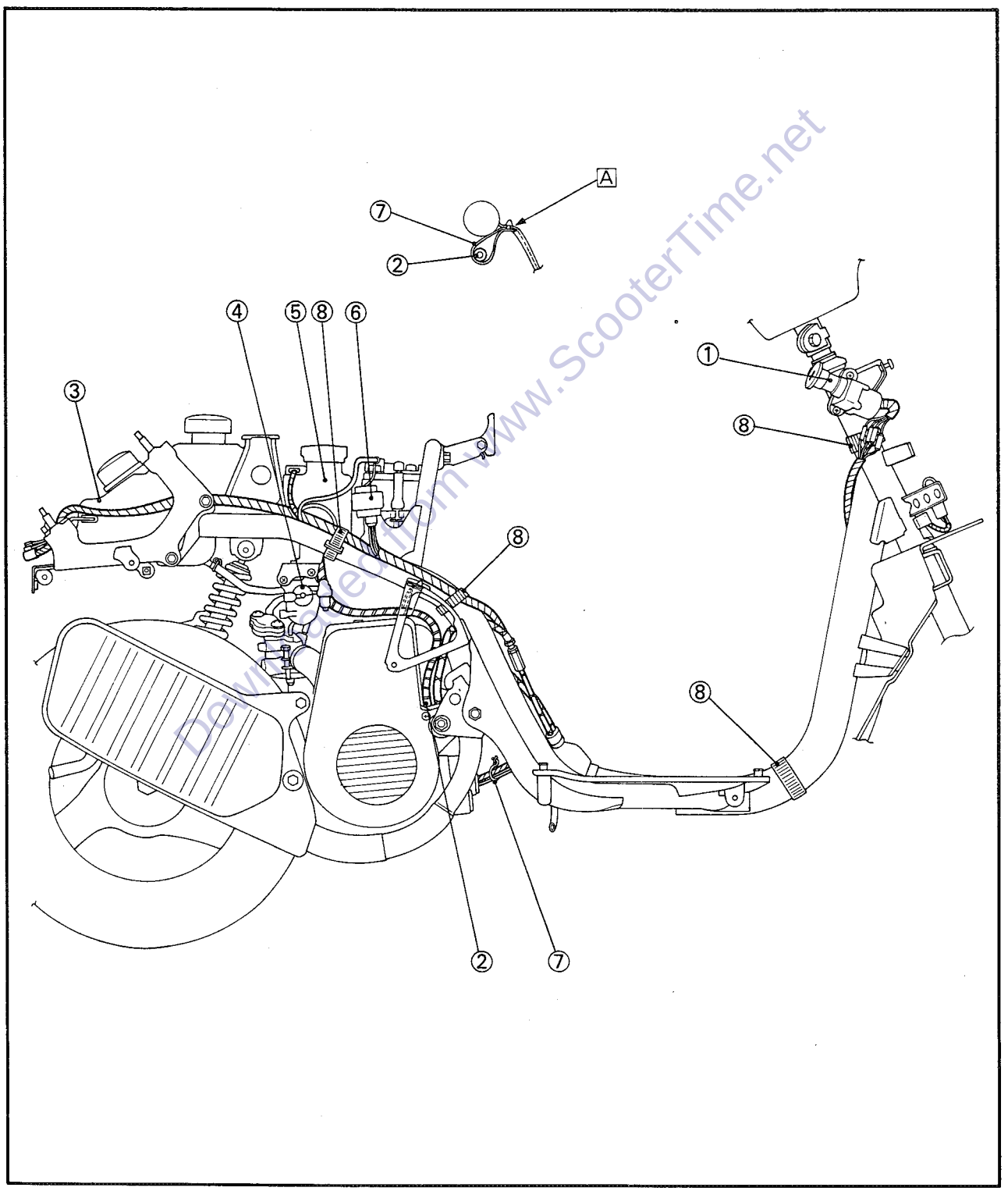

① High tension cord
② Auto choke unit lead
③ Band
④ Boot
⑤ C.D.I. magneto lead
⑥ Oil pump cover
⑦ Exhaust pipe
⑧ Clamp
⑨ Starter motor lead
⑩ Carrier 2
⑪ Taillight assembly
⑫ Tail cover assembly
⑬ License bracket
⑭ Flasher stay
⑮ Cap
⑯ Flasher light assembly

A Clamp firmly.
B Route battery breather hose inside the back stay and hold with clamp.
When installing cover, use care so that pipe is not pinched.
C Pass flasher lead through holes in flasher stay and carrier 2.
D As shown, after connecting the taillight and flasher leads, push the connections completely into the tail cover.
No coupler and connector are allowed to be outside the case.

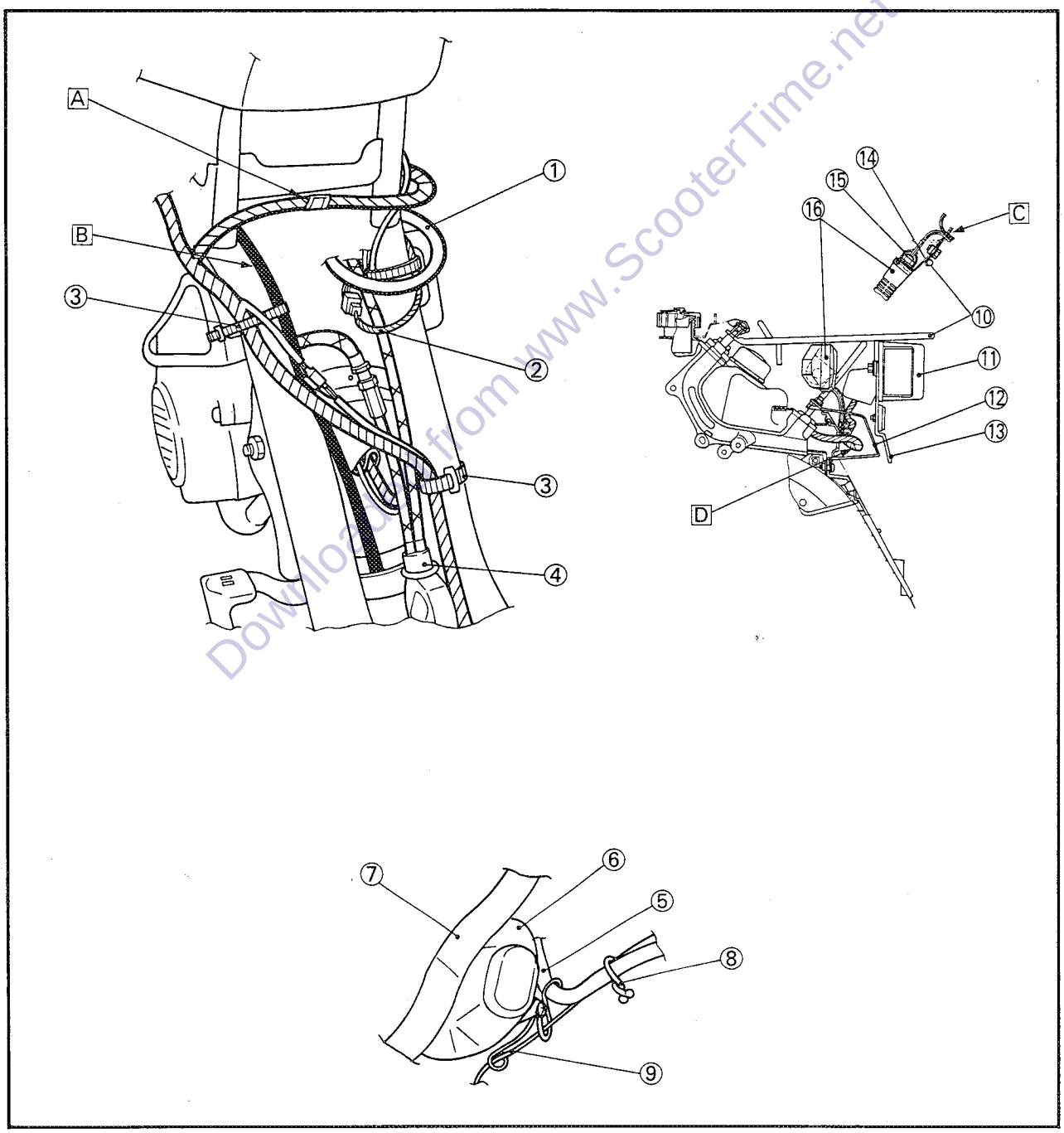

CE50T WIRING DIAGRAM

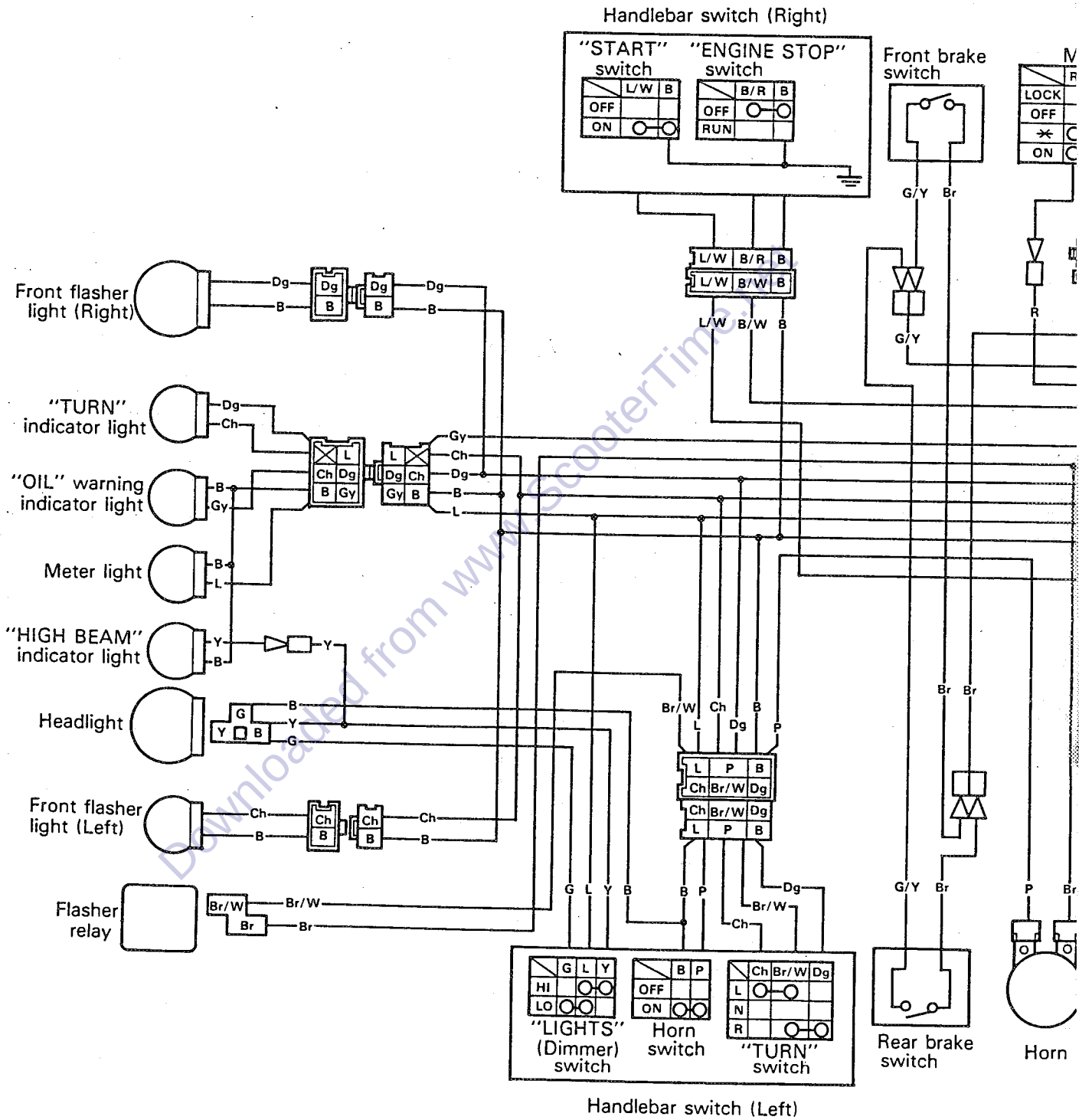

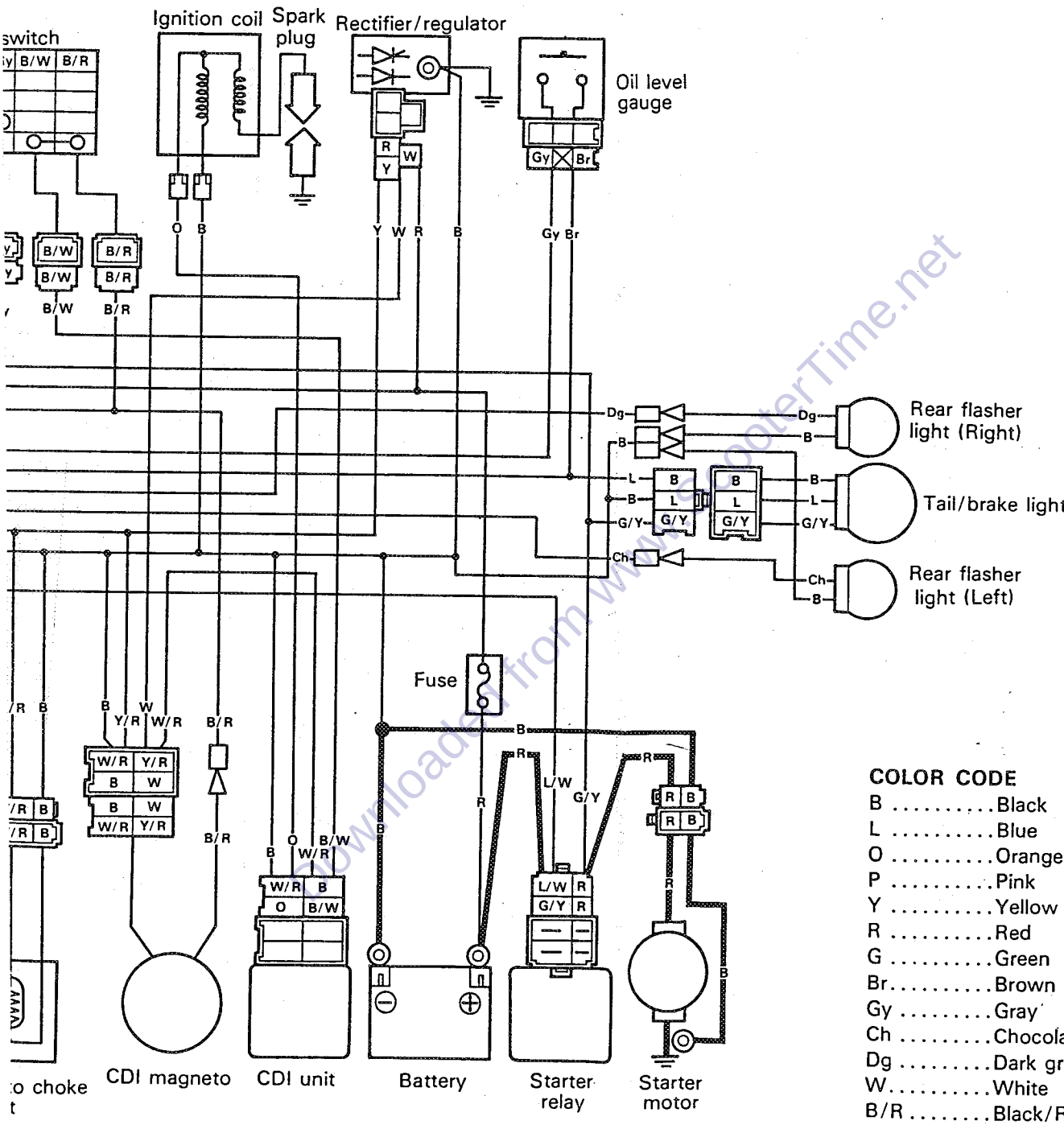

COLOR CODE

B .....Black
L .....Blue
O .....Orange
P .....Pink
Y .....Yellow
R .....Red
G .....Green
Br.....Brown
Gy .....Gray
Ch .....Chocolate
Dg .....Dark green
W.....White
B/R .....Black/Red
L/W .....Blue/White
Y/R .....Yellow/Red
G/Y .....Green/Yellow
Br/W.....Brown/White
W/R .....White/Red
B/W .....Black/White

YAMAHA

CG50U '88

2YT-AE1

SUPPLEMENTARY SERVICE MANUAL

FOREWORD

This Supplementary Service Manual has been prepared to introduce new service and new data for the CG50U. For complete information on service procedures, it is necessary to use this Supplementary Service Manual together with following manual:

CE50T Service Manual: 2UG-ME1

TECHNICAL PUBLICATIONS
SERVICE DIVISION
MOTORCYCLE GROUP
YAMAHA MOTOR CO., LTD.

CG50U
SUPPLEMENTARY
SERVICE MANUAL

1st Edition, November 1987

NOTICE

This manual was written by the Yamaha Motor Company primarily for use by Yamaha dealers and their qualified mechanics. It is not possible to put an entire mechanic's education into one manual, so it is assumed that persons using this book to perform maintenance and repairs on Yamaha scooters have a basic understanding of the mechanical concepts and procedures inherent in scooter repair technology. Without such knowledge, attempted repairs or service to this model may render it unfit to use and/or unsafe.

Yamaha Motor Company, Ltd. is continually striving to improve all models manufactured by Yamaha. Modifications and significant changes in specifications or procedures will be forwarded to all Authorized Yamaha dealers and will, where applicable, appear in future editions of this manual.

HOW TO USE THIS MANUAL

PARTICULARLY IMPORTANT INFORMATION

This material is distinguished by the following notation.

NOTE: **A NOTE** provides key information to make procedures easier or clearer.

CAUTION: **A CAUTION** indicates special procedures that must be followed to avoid damage to the scooter.

WARNING: **A WARNING** indicates special procedures that must be followed to avoid injury to a scooter operator or person inspecting or repairing the scooter.

MANUAL FORMAT

All of the procedures in this manual are organized in a sequential, step-by-step format. The information has been compiled to provide the mechanic with an easy to read, handy reference that contains comprehensive explanations of all disassembly, repair, assembly, and inspection operations.
In this revised format, the condition of a faulty component will precede an arrow symbol and the course of action required will follow the symbol, e.g.,

- Bearings
  Pitting/Damage→ Replace.

EXPLODED DIAGRAM

Each chapter provides exploded diagrams before each disassembly section for ease in identifying correct disassembly and assembly procedures.

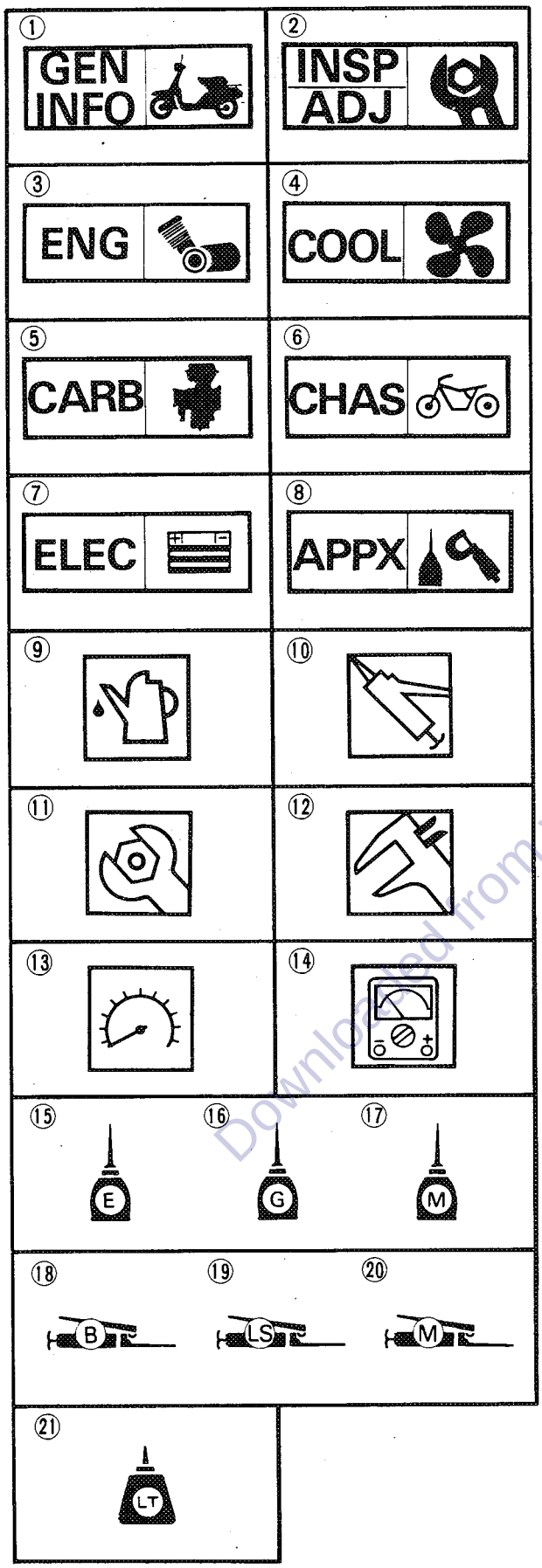

ILLUSTRATED SYMBOLS (Refer to the illustration)

Illustrated symbols ① to ⑧ are designed as thumb tabs to indicate the chapter's number and content.

① General information
② Periodic inspection and adjustment
③ Engine
④ Cooling system
⑤ Carburetion
⑥ Chassis
⑦ Electrical
⑧ Appendices

Illustrated symbols ⑨ to ⑭ are used to identify the specifications appearing in the text.

⑨ Filling fluid
⑩ Lubricant
⑪ Tightening
⑫ Wear limit, clearance
⑬ Engine speed
⑭ Ω, V, A

Illustrated symbols ⑮ to ㉑ in the exploded diagram indicate grade of lubricant and location of lubrication point.

⑮ Apply engine oil
⑯ Apply gear oil
⑰ Apply molybdenum disulfide oil
⑱ Apply wheel bearing grease
⑲ Apply lightweight lithium-soap base grease
⑳ Apply molybdenum disulfide grease
㉑ Apply locking agent (LOCTITE®)

CONTENTS

GENERAL INFORMATION

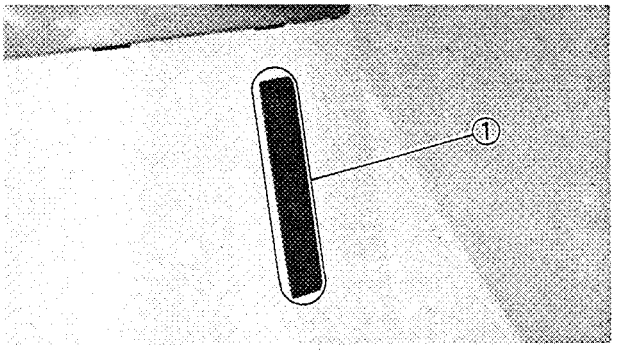

SCOOTER IDENTIFICATION

VEHICLE IDENTIFICATION NUMBER

The vehicle identification number ① is stamped into the frame.

NOTE:

The vehicle identification number is used to identify your scooter and may be used to register your scooter with the licensing authority in your state.

Starting Serial Number:
JYA2YTN0✱JA000101

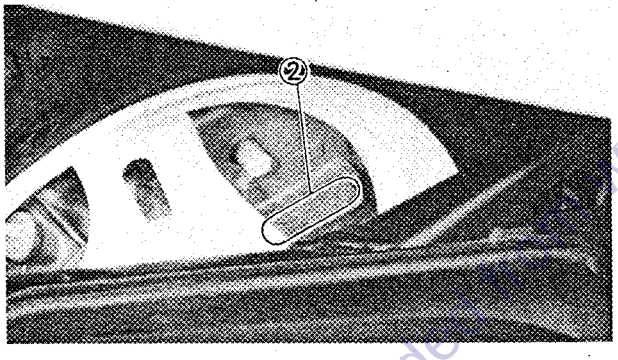

ENGINE SERIAL NUMBER

The engine serial number ② is stamped into the crankcase.

NOTE:

The first three digits of these numbers are for model identifications; the remaining digits are the unit production number.

Starting Serial Number:
2YT-000101

NOTE:

Designs and specifications are subject to change without notice.

PERIODIC INSPECTION AND ADJUSTMENT

INTRODUCTION

This chapter includes all information necessary to perform recommended inspections and adjustments. These preventive maintenance procedures, if followed, will ensure more reliable vehicle operation and a longer service life. The need for costly overhaul work will be greatly reduced. This information applies to vehicles already in service as well as new vehicles that are being prepared for sale. All service technicians should be familiar with this entire chapter.

PERIODIC MAINTENANCE/LUBRICATION INTERVALS

Unit: km (miles)

ITEM	REMARKS	BREAK-IN 500 (300)	EVERY 3,000 (2,000) or 6 months	EVERY 6,000 (4,000) or 12 months
Spark plug	Check condition. Clean or replace if necessary.	○	○	○
Air filter*	Clean. Replace if necessary.		○	○
Carburetor*	Check idle speed/starter operation. Adjust if necessary.	○		○
Fuel line*	Check fuel hose for cracks or damage. Replace if necessary.		○	○
Transmission oil*	Check oil leakage. Correct if necessary. Replace every 12,000 (8,000) or 24 months. (Warm engine before draining.)	REPLACE	○	○
Autolube pump*	Check operation. Correct if necessary. Air bleeding.	○		○
Brake	Check operation. Adjust if necessary.		○	○
Wheels*	Check/damage/runout. Repair if necessary.		○	○
Wheel bearings*	Check bearings assembly for looseness/ damage. Replace if damaged.		○	○
Steering bearing*	Check bearings assembly for looseness. Correct if necessary. Moderately repack every 12,000 (8,000) or 24 months.**	○	○	○
Rear shock absorber*	Check operation/oil leakage. Repair if necessary.		○	○
Fittings/Fasteners*	Check all chassis fittings and fasterners. Correct if necessary.	○	○	○
Centerstand*	Check operation. Repair if necessary.	○	○	○
Battery*	Check specific gravity. Check breather pipe for proper operation. Correct if necessary.		○	○
V-belt	Check damage and wear. Replace if necessary.			○

*: It is recommended that these items be serviced by a Yamaha dealer.
**: Medium weight wheel bearing grease.

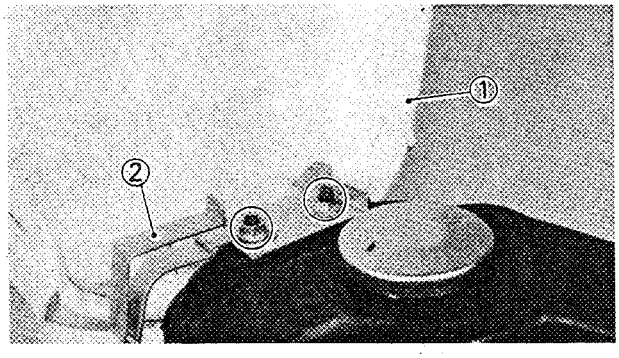

COVERS

TAIL COVERS AND MOLES

Removal

1. Open the seat lock.

2. Remove:
   - Seat ①
   - Helmet holder ②

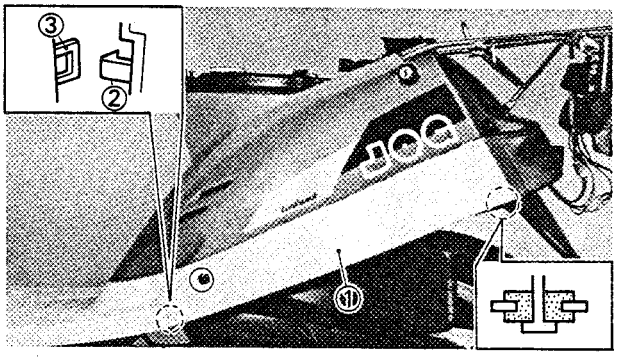

3. Remove:
   - Moles ① (Left and right)

NOTE:

- Unhook the pawl ② out of groove ③ of the footrest board.
- Slide the mole backward and unhook the pawl ④ out of groove ⑤ of the tail cover.

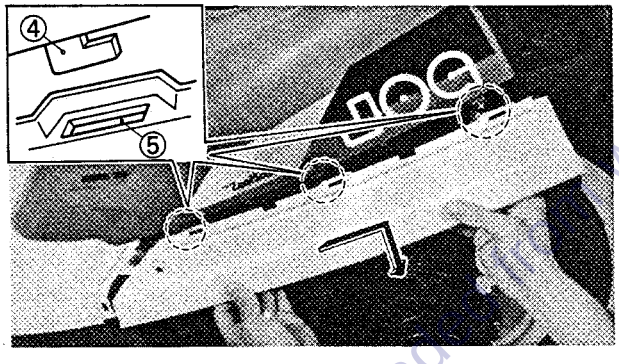

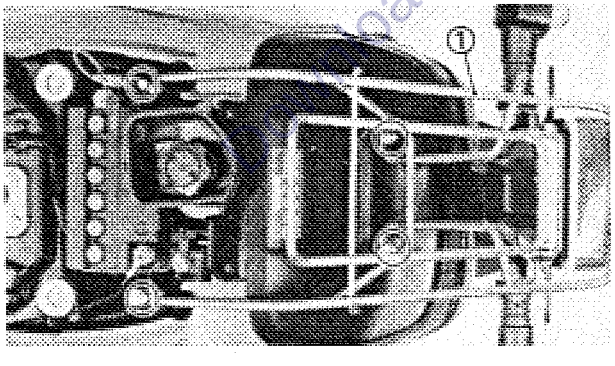

4. Disconnect:
   - Taillight leads
   - Rear flasher light leads
5. Remove:
   - Carrier assembly ①

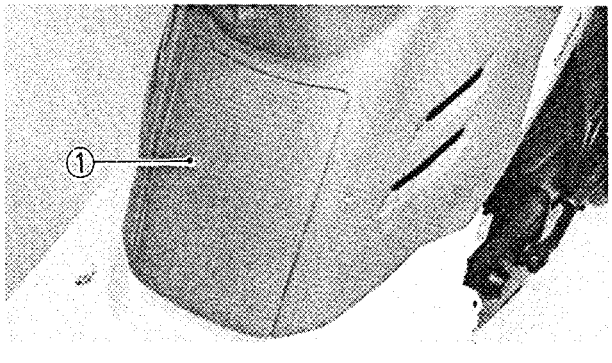

6. Remove:
   - Cover ①

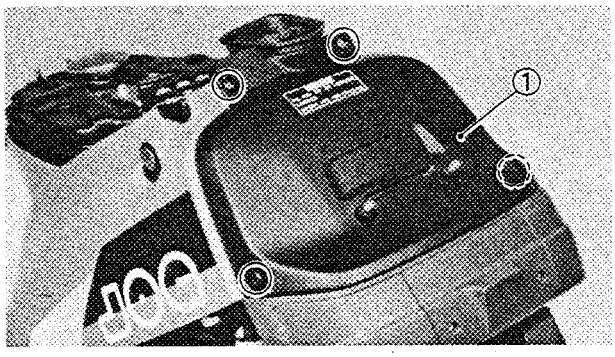

7. Remove:
   - Cover ①

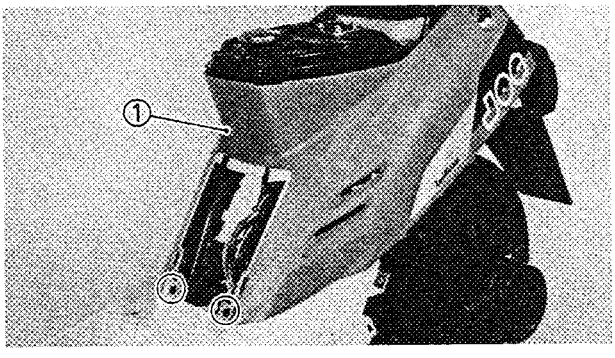

8. Remove:
   - Tail cover ①

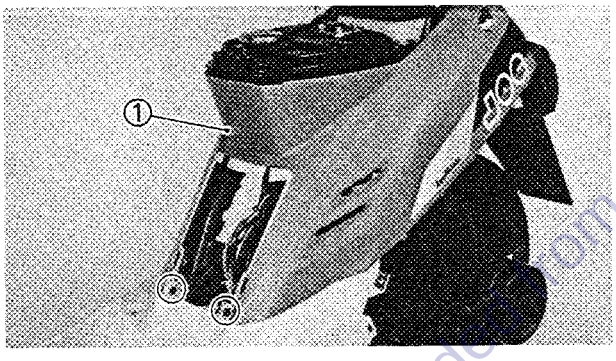

Installation

1. Install:
   - Tail cover ①

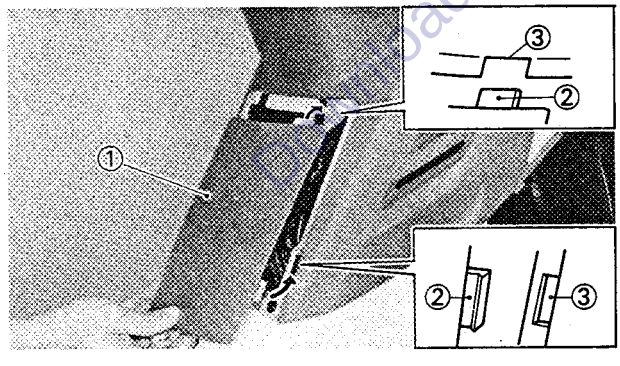

2. Install:
   - Cover ①

NOTE:

Install the projection ② into the opening ③.

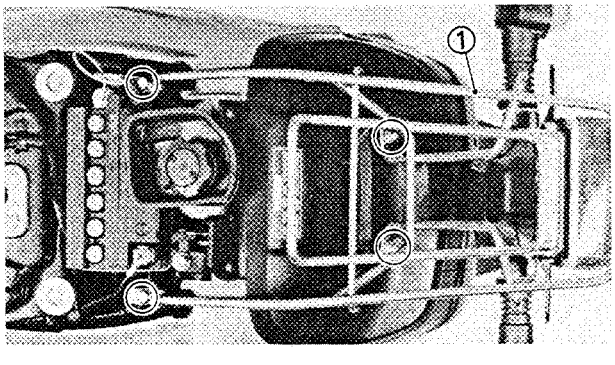

3. Install:
   - Carrier assembly ①

Nut (Carrier): **7 Nm (0.7 m•kg, 5.1 ft•lb)** **Bolt (Carrier):** **7 Nm (0.7 m•kg, 5.1 ft•lb)**

4. Connect:
   - Taillight leads
   - Rear flasher light leads

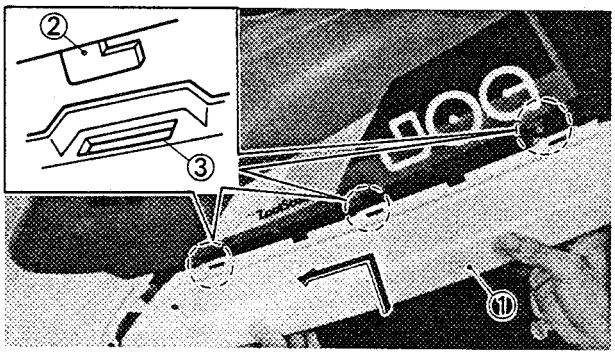

5. Install:
   - Mole (Left and right) ①

NOTE:

- Hook the pawl ② onto the opening ③, and slide the mole forward.
- Hook the pawl ④ onto the opening ⑤.

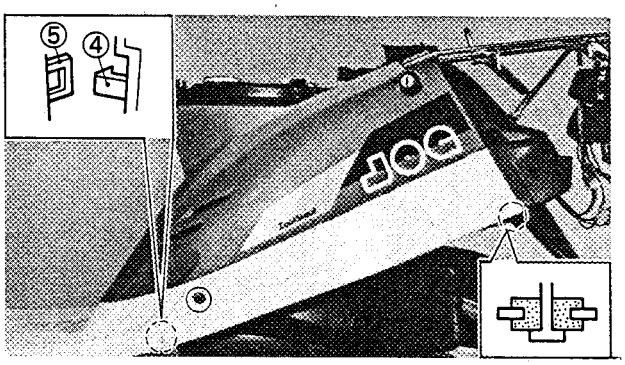

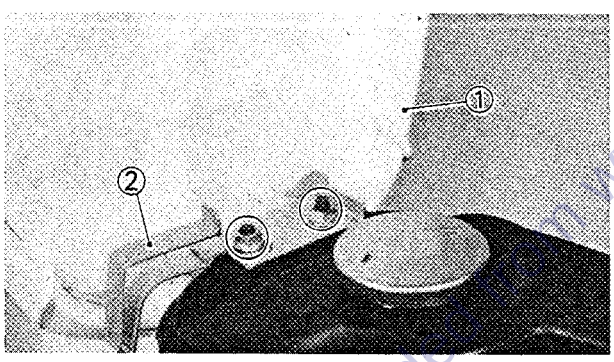

6. Install:
   - Seat ①
   - Helmet holder ②

Nut (Seat):
7 Nm (0.7 m•kg, 5.1 ft•lb)

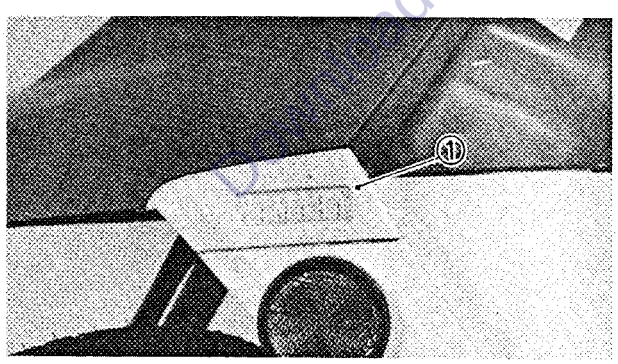

FRONT PANEL, LEG SHIELD AND FOOTREST BOARD

Removal

1. Remove:
   - Covers ① (Left and right)

NOTE:

Unhook the projection by pulling up the cover.

2. Remove:
   - Front panel ①

NOTE:

Unhook the projection by pulling up the front panel.

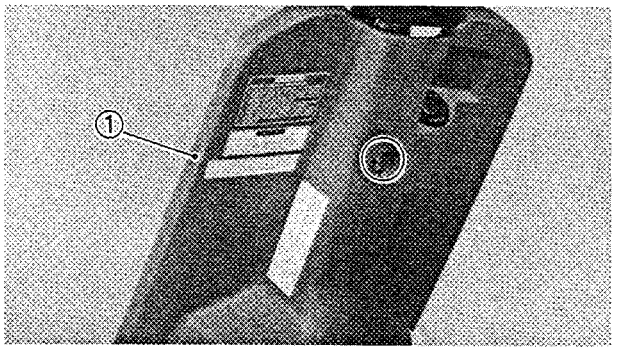

3. Remove:
   - Leg shield ①

4. Remove:
   - Tail cover
     Refer to "TAIL COVERS AND MOLES" section.

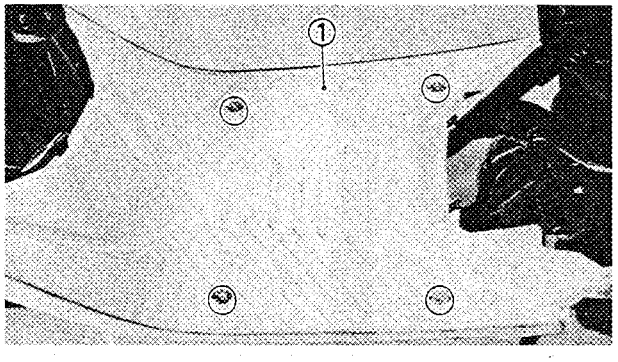

5. Remove:
   - Footrest board ①

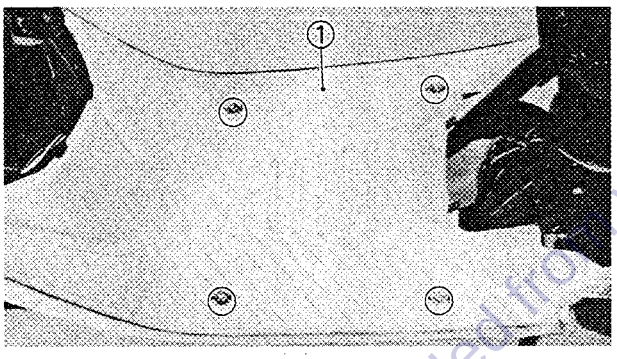

Installation

1. Install:
   - Footrest board ①

2. Install:
   - Tail cover
     Refer to "TAIL COVER AND MOLES" section.

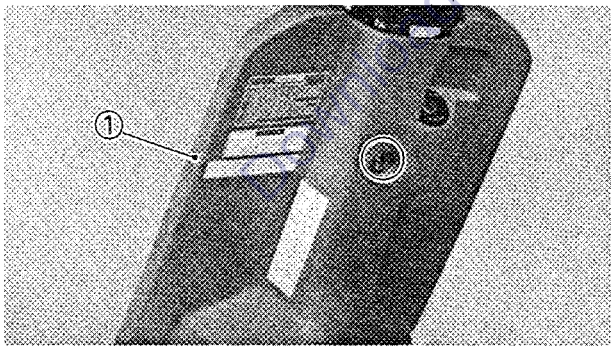

3. Install:
   - Leg shield ①

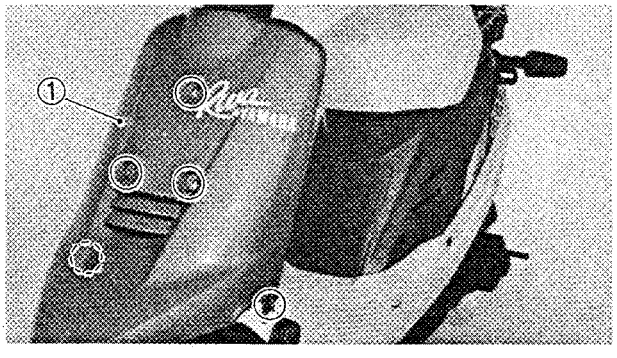

4. Install:
   - Front panel ①

NOTE:

Install the projection into the slot.

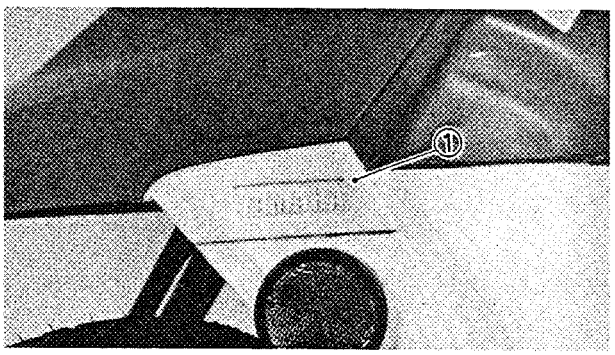

5. Install:
   - Covers ① (Left and right)

NOTE:

Install the projection into the slot.

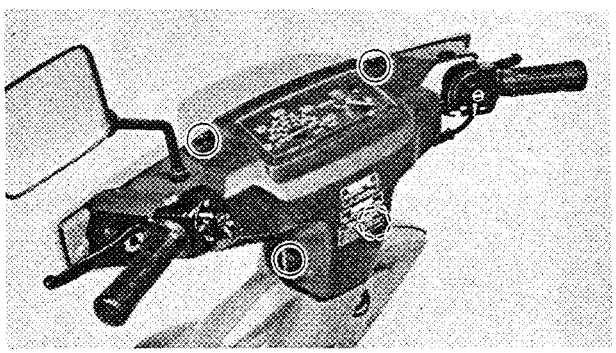

HANDLEBAR COVERS

Removal

1. Remove:
   - Screws (Handlebar cover — Front)

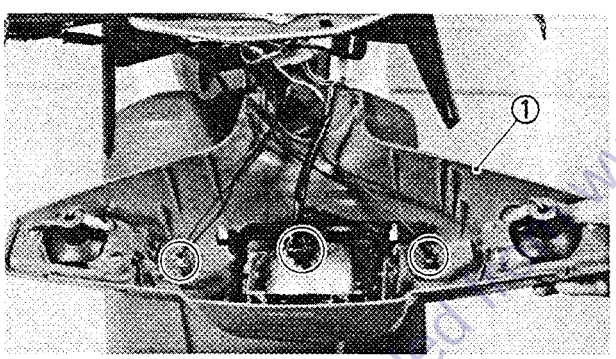

2. Disconnect:
   - Headlight lead and flasher light leads
3. Remove:
   - Handlebar cover ① (Front)

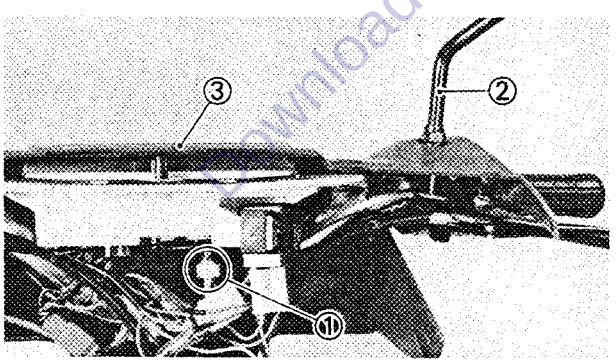

4. Disconnect:
   - Leads
   - Speedometer cable ①
5. Remove:
   - Rear view mirror ②
   - Handlebar cover ③ (Rear)

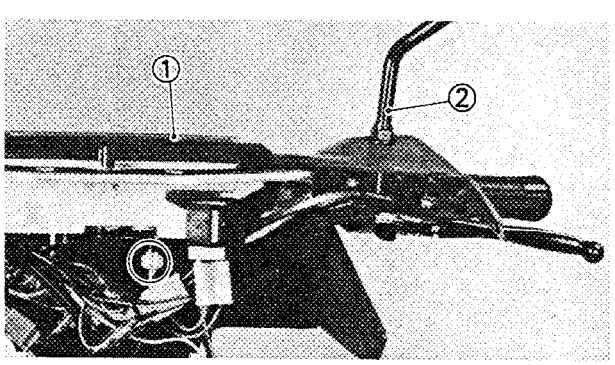

Installation

1. Install:
   - Handlebar cover ① (Rear)
   - Rear view mirror ②
2. Connect:
   - Leads
   - Speedometer cable

WARNING:

Proper cable and lead routing is essential to insure safe scooter operation. Refer to "CABLE ROUTING" section.

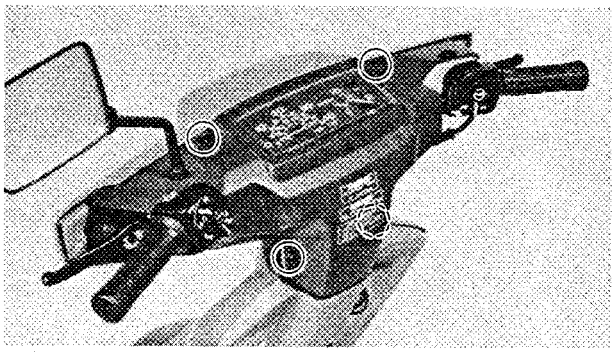

3. Connect:
   - Headlight lead
   - Flasher light leads
4. Install:
   - Handlebar cover (Front)

ENGINE

ENGINE OIL LEVEL INSPECTION

1. Place the scooter on the level place.

NOTE:

Be sure the scooter is positioned straight up and on both wheels when inspecting the oil level.

2. Check:
   - Oil level

     Oil level low→Add sufficient oil.

Recommended Oil:
Yamalube 2 or Air Cooled 2 Stroke Engine Oil
Oil Tank Capacity:
0.8 L (0.70 Imp qt, 0.84 US qt)

OIL LEVEL AND "OIL" INDICATOR LIGHT CHECKING METHOD

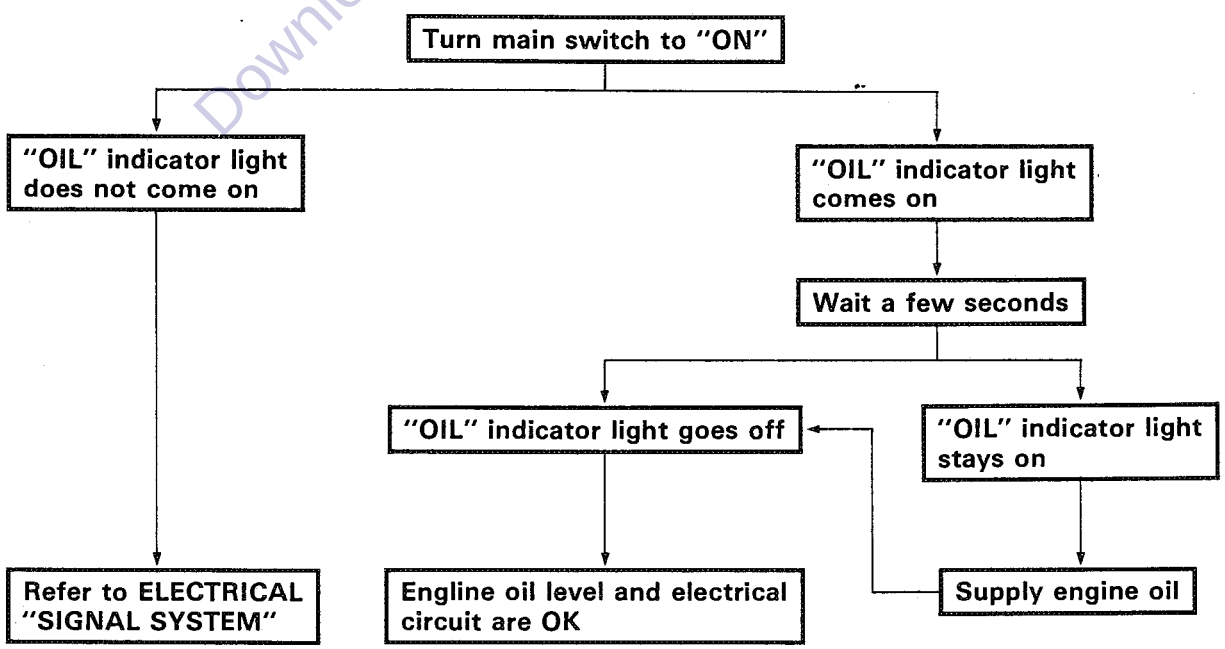

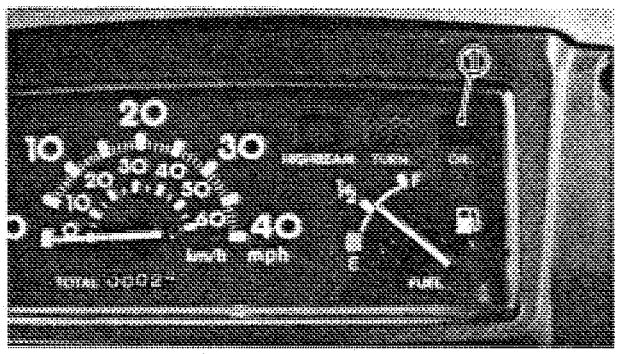

NOTE:

If the main switch is turned off after the "OIL" light goes off and then immediately again the main switch is turned on, the "OIL" light may not come on. This is not because of failure.

① "OIL" indicator light

CAUTION:

Always use the same type of engine oil; mixing oils may result in a harmful chemical reaction and lead to poor performance.

AUTOLUBE PUMP AIR BLEEDING

CAUTION:

The oil pump and delivery line must be bled on the following occasions:

- **Any portion of the oil system has been disconnected.**
- **The scooter has been turned on its side.**
- **Whenever the oil tank has been run empty.**
- **During predelivery.**

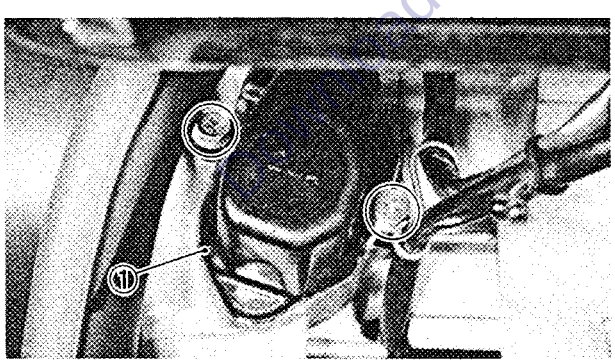

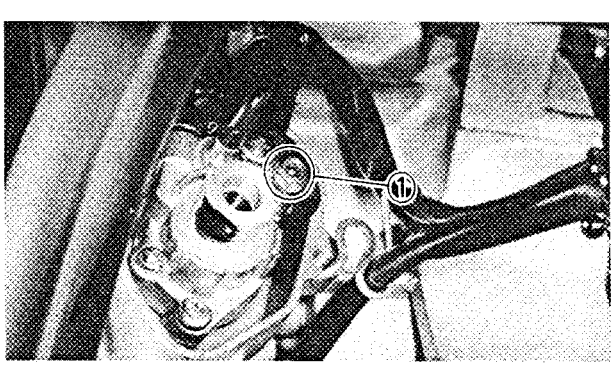

1. Remove:
   - Tail cover
     Refer to "TAIL COVERS AND MOLES" section.
   - Pump cover ①
2. Fill:
   - Oil tank

Recommended Oil:
Yamalube "2" or Air-cooled 2 Stroke Engine Oil

3. Place a rag or oil pan under the oil pump to catch oil.
4. Remove:
   - Bleed screw ①
5. Inspect:
   - Gasket (Bleed screw)
     Damage→Replace.

6. Keep the oil running out until air bubbles disappear from the oil hose and bleed hole.

7. Install:
   - Gasket (Bleed screw)
   - Bleed screw

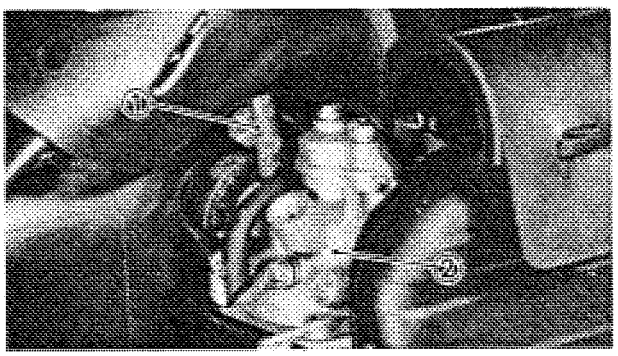

8. Disconnect:
   - Oil delivery hose ①
     From the carburetor ②.

9. Feed the engine oil into the oil delivery hose using a oil can from complete air bleeding. Then, connect the oil delivery hose to the carburetor.

NOTE:
Thoroughly clean the engine exterior of oil.

10. Install:
    - Tail cover
      Refer to "TAIL COVERS AND MOLES" section.

ELECTRICAL

CG50U CIRCUIT DIAGRAM

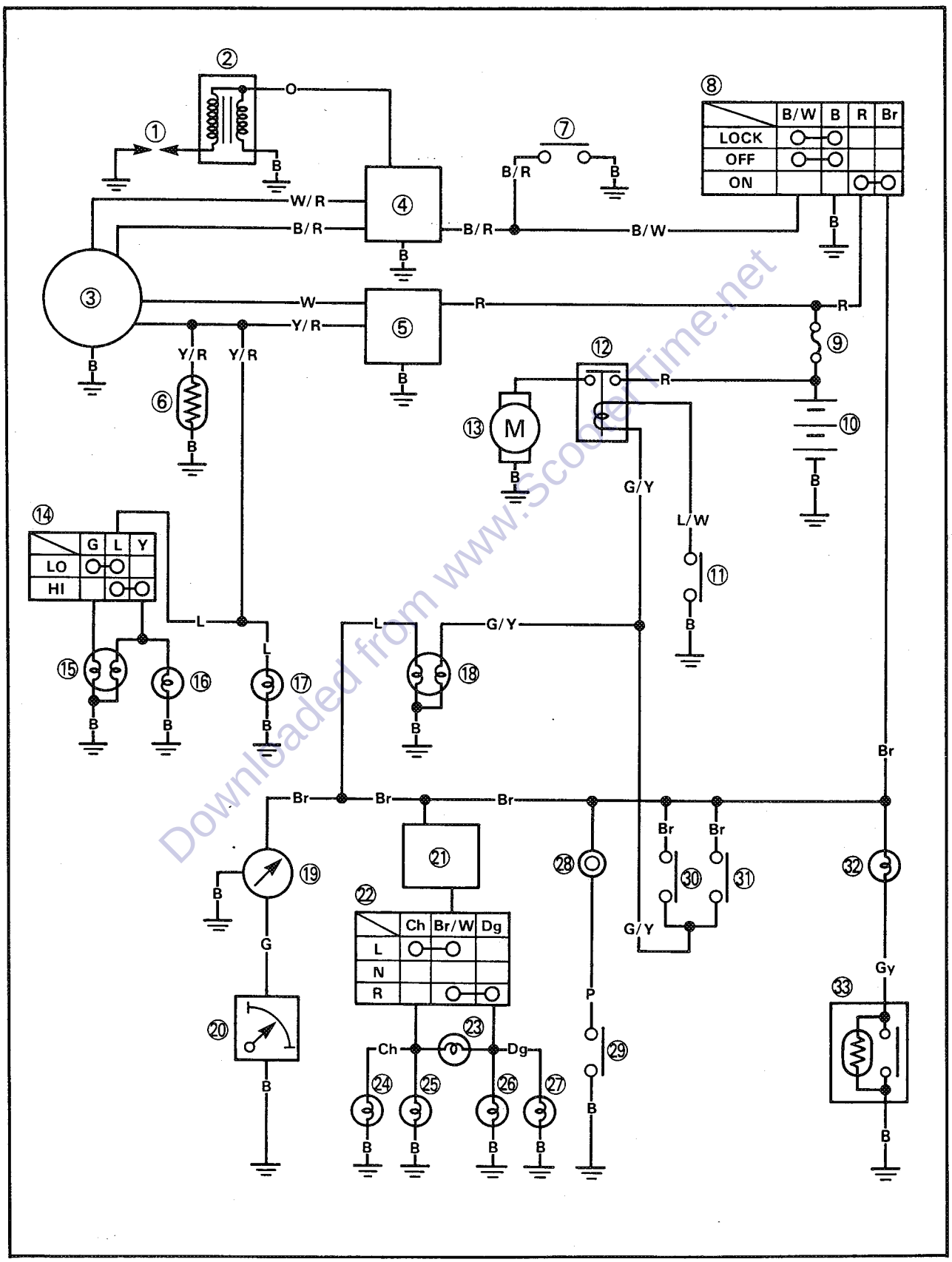

CG50U CIRCUIT DIAGRAM

① Spark plug
② Ignition coil
③ CDI magneto
④ CDI unit
⑤ Rectifier/Regulator
⑥ Auto choke unit
⑦ "ENGINE STOP" switch
⑧ Main switch
⑨ Fuse
⑩ Battery
⑪ "START" switch
⑫ Starter relay
⑬ Starter motor
⑭ "LIGHTS" (Dimmer) switch
⑮ Headlight
⑯ "HIGH BEAM" indicator light
⑰ Meter light
⑱ Tail/Brake light
⑲ Fuel meter
⑳ Fuel sender
㉑ Flasher relay
㉒ "TURN" switch
㉓ "TURN" indicator light
㉔ Left flasher light (Front)
㉕ Left flasher light (Rear)
㉖ Right flasher light (Front)
㉗ Right flasher light (Rear)
㉘ Horn
㉙ "HORN" switch
㉚ Front brake switch
㉛ Rear brake switch
㉜ "OIL" indicator light
㉝ Oil level gauge

COLOR CODE

R	Red	P	Pink
B	Black	L	Blue
W	White	Y/R	Yellow/Red
Y	Yellow	L/W	Blue/White
Br	Brown	G/Y	Green/Yellow
Gy	Gray	B/W	Black/White
O	Orange	B/R	Black/Red
Ch	Chocolate	W/R	White/Red
Dg	Dark green	Br/W	Brown/White
G	Green		

ELECTRICAL COMPONENTS

① Wireharness
② Fuel sender
③ Ignition coil
④ Battery
⑤ Starter relay
⑥ Oil level gauge
⑦ CDI unit

A	BATTERY TYPE: YB4L-B SPECIFIC GRAVITY: 1.280
B	IGNITION COIL RESISTANCE PRIMARY: 0.56~0.84Ω at 20°C (68°F) SECONDARY: 5.68~8.52kΩ at 20°C (68°F)

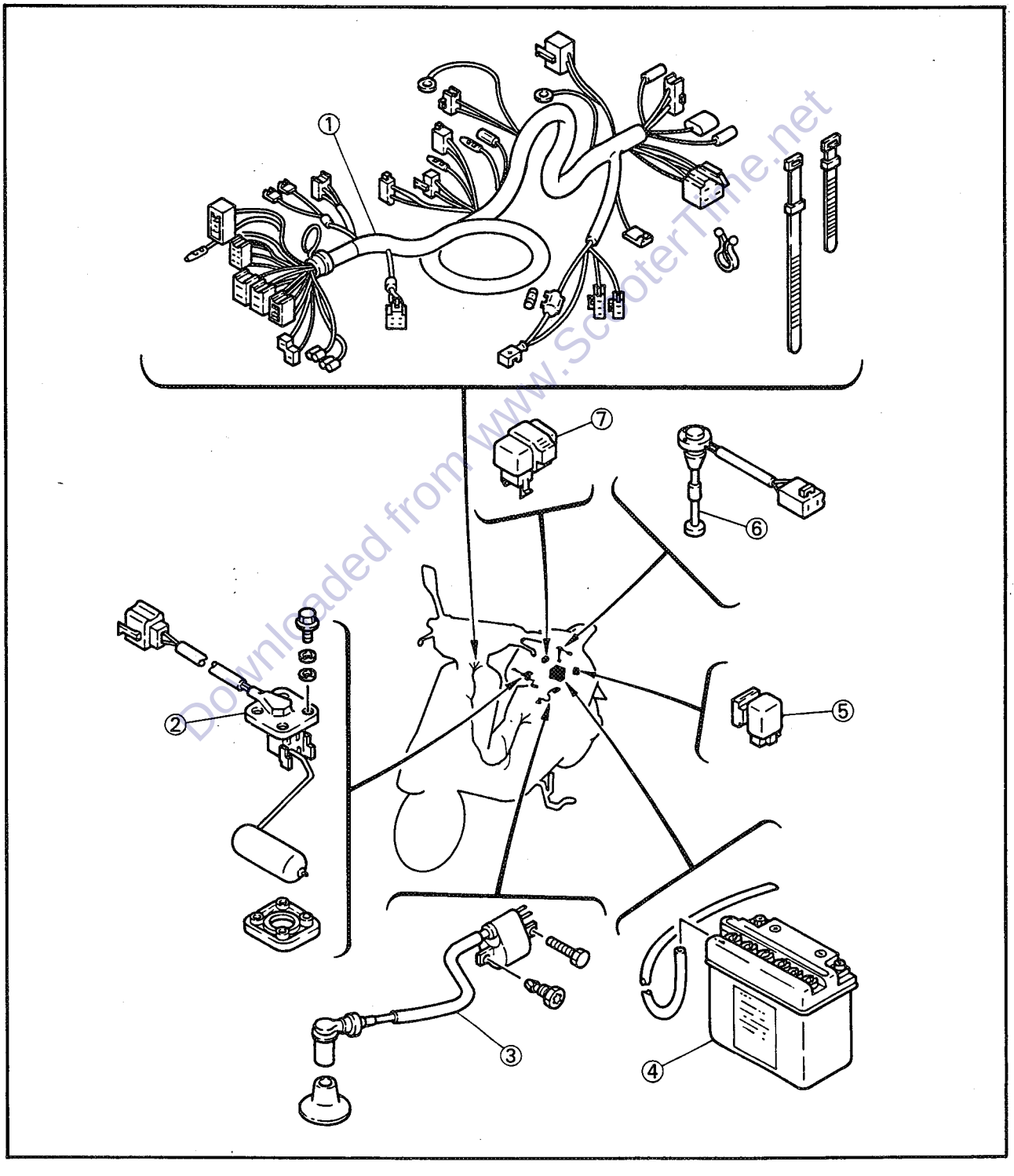

① Main switch
② Horn
③ Rectifier/Regulator
④ Flasher relay

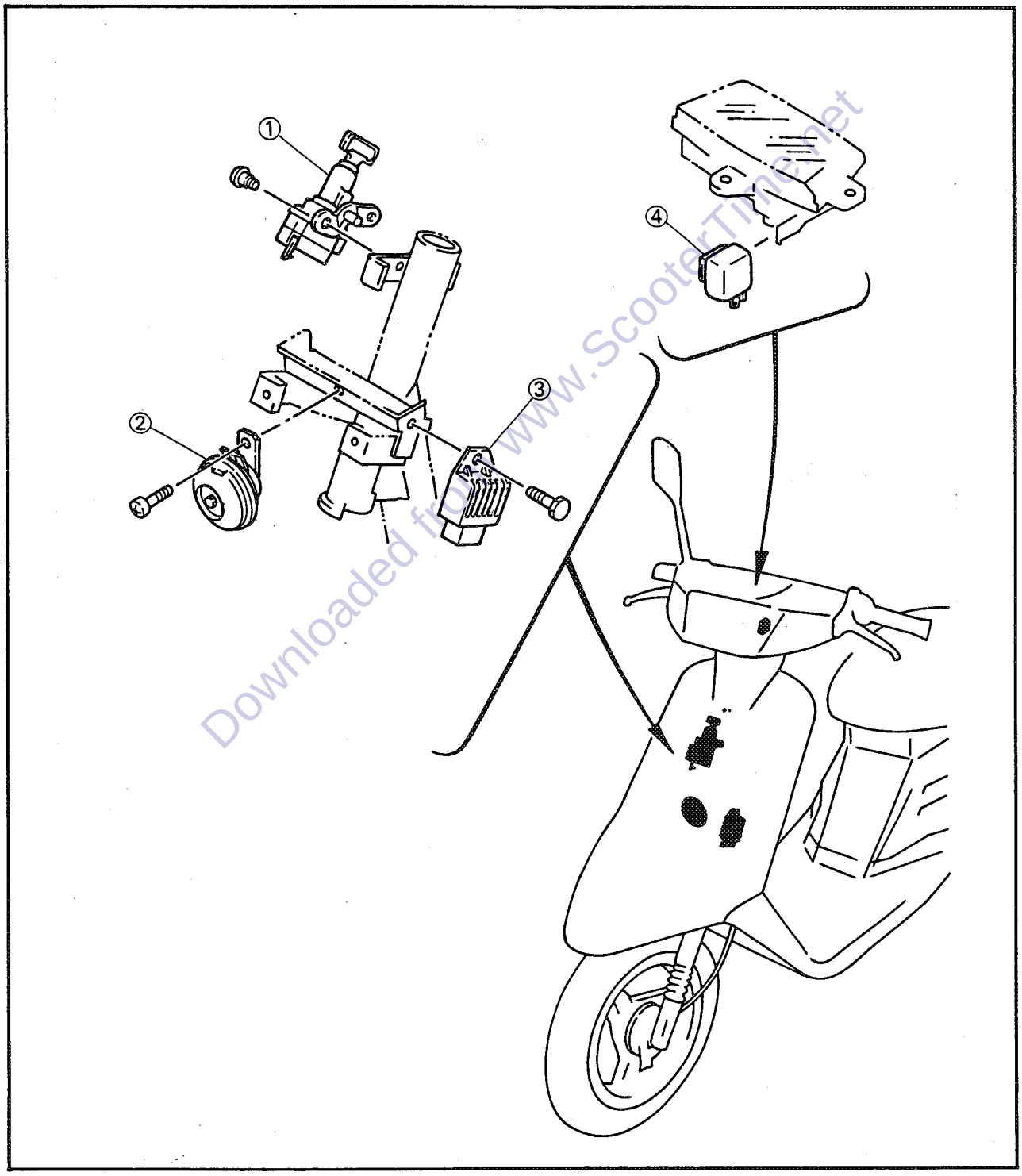

SIGNAL SYSTEM

CIRCUIT DIAGRAM

Below circuit diagram shows signal system.

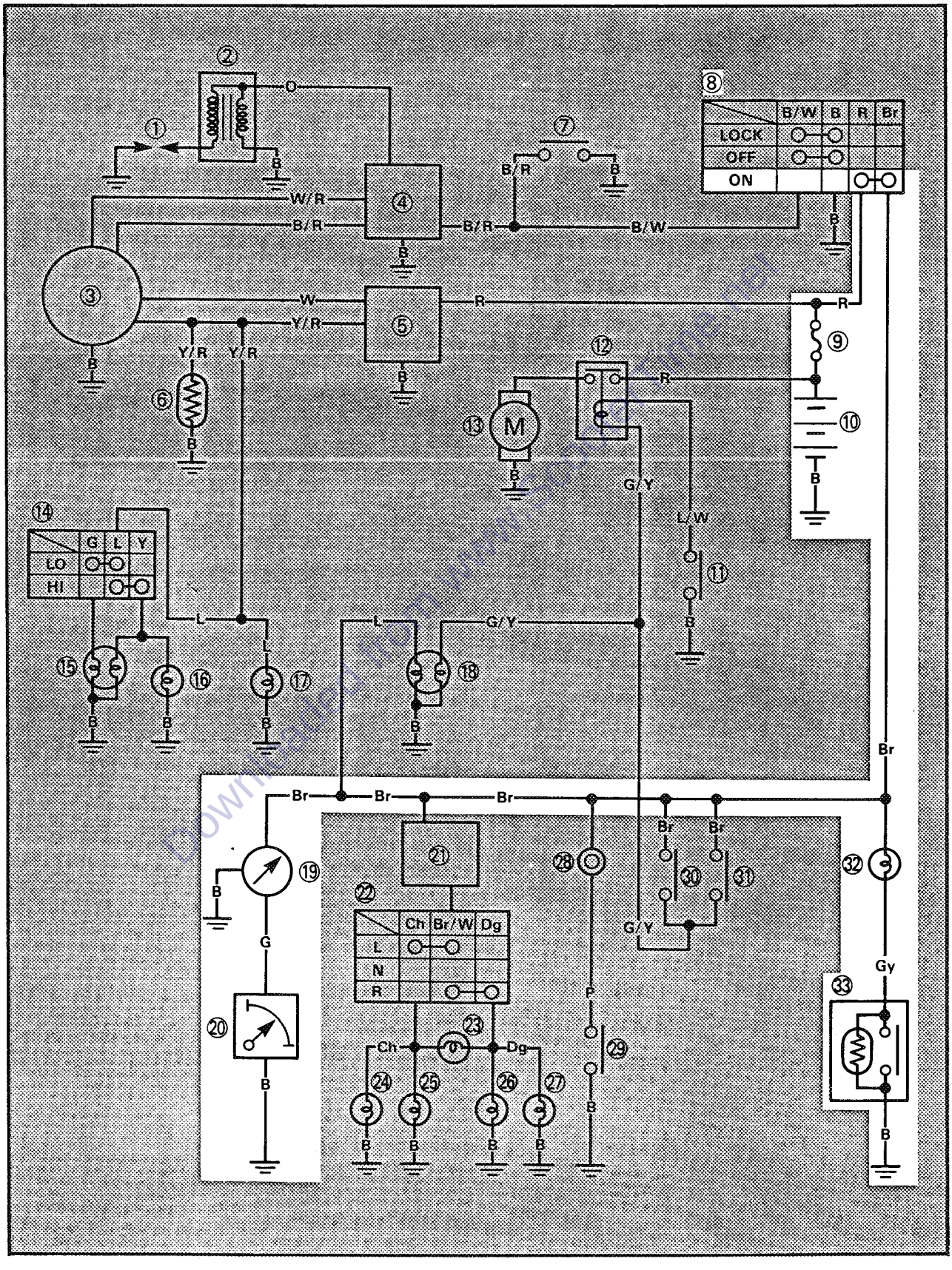

NOTE:

- For color codes, see page 12.
- Unlike the previous CE50T, this model has a fuel meter and fuel sender added and the oil level gauge changed. This signal system explains the checking of only such addition and change.

⑧ Main switch
⑨ Fuse
⑩ Battery
⑲ Fuel meter
⑳ Fuel sender
㉜ "OIL" indicator light
㉝ Oil level gauge

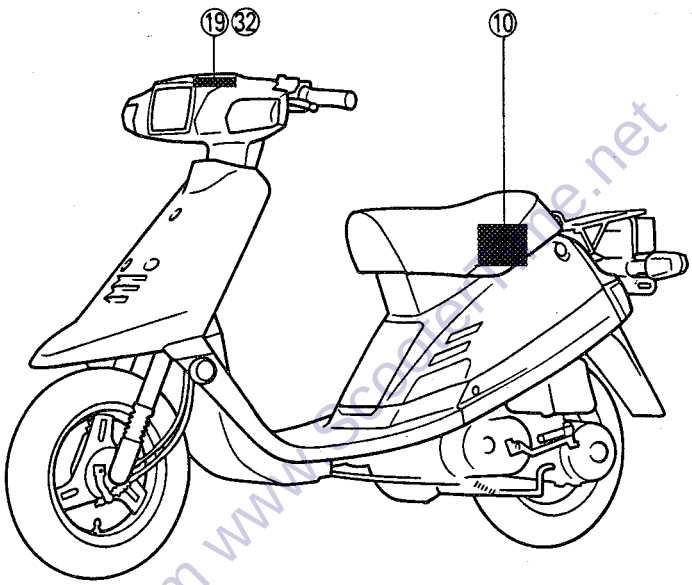

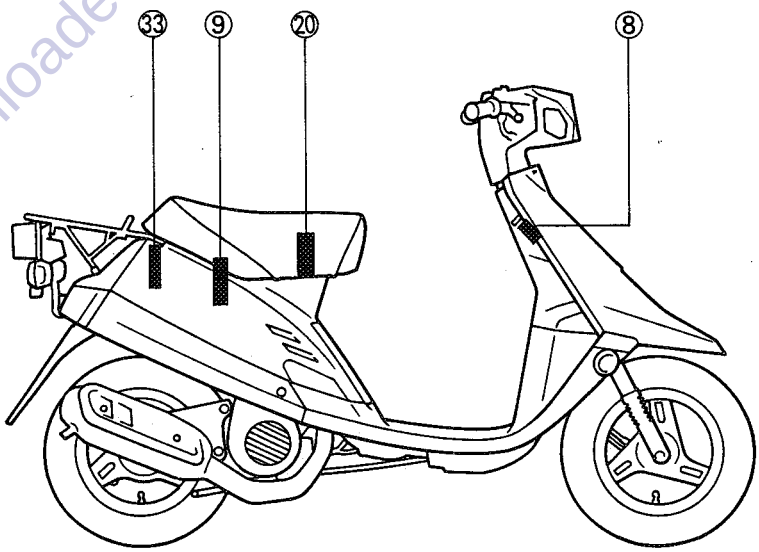

TROUBLESHOOTING

NOTE:

The battery provides power for operation of the fuel meter and "OIL" indicator light. If none of the above operates, always check the battery voltage before proceeding further. Low battery voltage indicates either a faulty battery, low battery electrolyte, or defective charging system. Also, check the fuse condition.

1. Fuel meter does not work

Check for voltage (12V) on "Br" lead at fuel meter connector.
- NO VOLTAGE → Wiring circuit from fuse to fuel meter connector is faulty, repair.
- OK ↓

Check for voltage (12V) on "G" lead at fuel meter connector.
- NO VOLTAGE → Check for condition of fuel meter. If fuel meter is poor condition, replace it.
- OK ↓

Check for voltage (6 ~ 12V) on "G" lead at fuel sender connector.
- NO VOLTAGE → Wiring circuit from fuel meter to fuel sender is faulty, repair.
- OK ↓

Check for condition of fuel sender and fuel meter. Refer to "FUEL SENDER CHECK" and "FUEL METER CHECK".

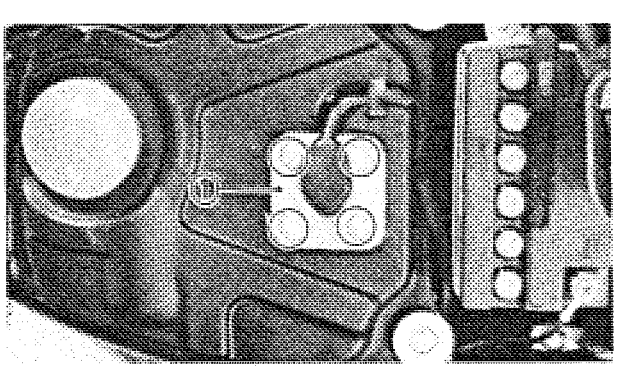

Fuel Sender Check

1. Remove:
   - Fuel sender ①

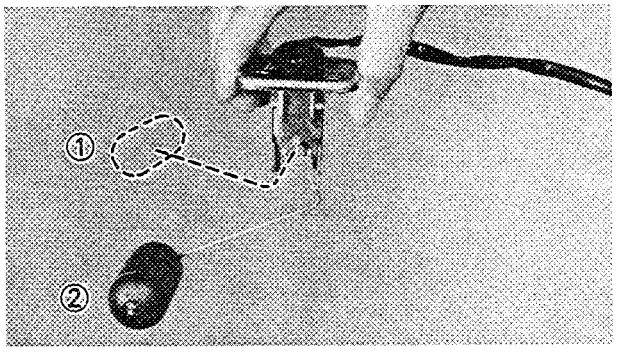

2. Connect:
   - Pocket Tester (YU-03112)
     Set the tester selector to "Ω × 10" position.
3. Check:
   - Fuel sender conduct
     Refer to following table.
     Not per result→Replace.

Float position	Fuel sender resistance
Up ①	4 ~ 10Ω
Down ②	90 ~ 100Ω

NOTE:
Check from top to bottom.

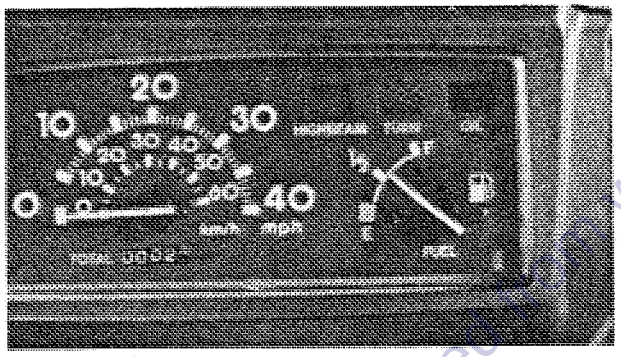

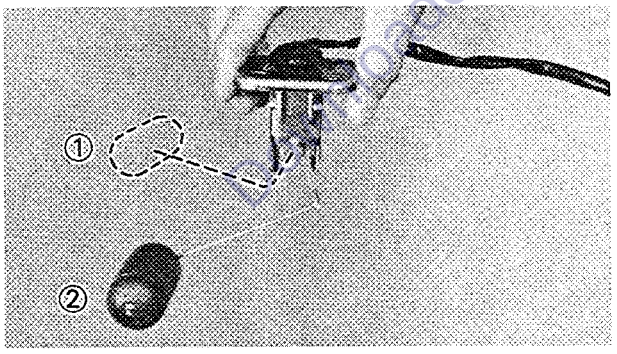

Fuel Meter Check

1. Connect:
   - Fuel sender lead
2. Turn the main switch to "ON".
3. Check:
   - Fuel meter
     Refer to following table.
     Not per result→Replace.

Float position	Fuel meter position
Up ①	"F"
Down ②	"E"

NOTE:
Before reading the meter, stay put the float for more than three minutes respectively at ① and ②.

2. "OIL" indicator light does not work

Check for voltage (12V) on "Br" lead at "OIL" indicator light connector.
→ NO VOLTAGE → Wiring circuit from fuse to "OIL" indicator light connector is faulty, repair.
↓ OK

Check for voltage (12V) on "Gy" lead at "OIL" indicator light connector.
→ NO VOLTAGE → "OIL" indicator light socket is faulty, replace it.
↓ OK

Check for voltage (12V) on "Gy" lead at oil level gauge connector.
→ NO VOLTAGE → Wiring circuit from "OIL" indicator light to oil level gauge is faulty, repair.
↓ OK

Check for condition of oil level gauge. Refer to "OIL LEVEL GAUGE CHECK".

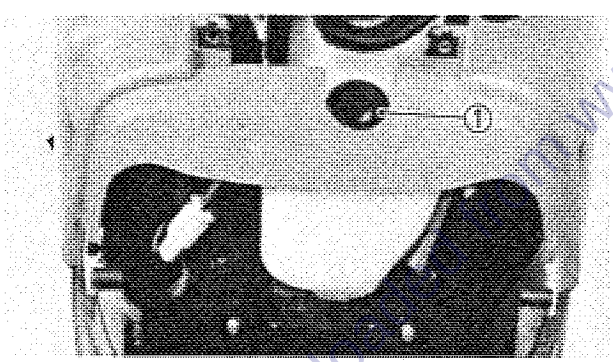

Oil Level Gauge Check

1. Remove:
   - Oil level gauge ①

NOTE:

Do not disconnect the oil level gauge lead.

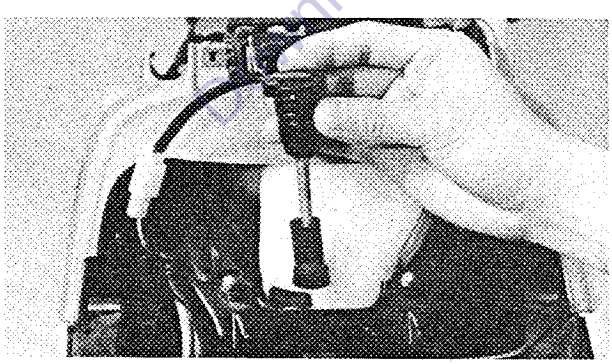

2. Turn the main switch to "ON".

3. Check
   - Oil level gauge
     Refer to following table.
     Not per result→Replace.

Oil level gauge position	"OIL" indicator light
Upright position	•Light comes on •Wait a few second •Light goes out
Up-side down position	•Light comes on •Wait a few second •Light stays on

APPENDICES

SPECIFICATIONS

GENERAL SPECIFICATIONS

Model	CG50U
Model Code Number	2YT
Vehicle Identification Number	2YTN0*JA000101
Engine Starting Number	2YT-000101
Dimensions:	
Overall Length	1,610 mm (63.4 in)
Overall Width	625 mm (24.6 in)
Overall Height	985 mm (38.8 in)
Seat Height	700 mm (27.5 in)
Wheelbase	1,115 mm (43.9 in)
Minimum Ground Clearance	95 mm (3.7 in)
Basic Weight:	
With Oil and Full Fuel Tank	58 kg (128 lb)
Minimum Turning Radius	1,600 mm (63 in)
Engine:	
Engine Type	Air cooled 2-stroke, gasoline torque induction
Cylinder Arrangement	Single cylinder, Forward inclined
Displacement	49 cm^3
Bore × Stroke	40.0 × 39.2 mm (1.575 × 1.543 in)
Compression Ratio	6.7 : 1
Starting System	Electric and kick starter
Lubrication System	Separate lubrication (Yamaha Autolube)
Oil Type or Grade:	
Engine Oil	Yamalube 2 or Air cooled 2-stroke engine oil
Transmission Oil	Yamalube 4 or SAE 10W30 type SE motor oil
Oil Capacity:	
Oil Tank (Engine Oil)	0.8 L (0.7 Imp qt, 0.84 US qt)
Transmission Oil:	
Periodic Oil Change	0.10 L (0.09 Imp qt, 0.11 US qt)
Total Amount	0.11 L (0.10 Imp qt, 0.12 US qt)
Air Filter	Wet type element
Fuel:	
Type	Regular gasoline
Tank Capacity	3.5 L (0.77 Imp gal, 0.92 US gal)

Model	CG50U
Carburetor:	
Type/Manufacturer	Y12P/TEIKEI KIKAKI
Spark Plug:	
Type/Manufacturer	BPR7HS/NGK, W22FPR-U/N.D
Gap	0.6~0.7 mm (0.024~0.028 in)
Clutch Type	Dry, Centrifugal automatic
Transmission:	
Primary Reduction System	Herical gear
Primary Reduction Ratio	52/14 (3.714)
Secondary Reduction System	Spur gear
Secondary Reduction Ratio	38/10 (3,800)
Transmission Type	V-belt
Operation	Automatic
Chassis:	
Frame Type	Steel tube underbone
Caster Angle	26.5°
Trail	72 mm (2.83 in)
Tire:	
Size (F)	3.00-10-4PR
Size (R)	3.00-10-4PR
Tire Pressure (Cold tire):	
Front	125 kPa (1.25 kg/cm^2, 18 psi)
Rear	200 kPa (2.00 kg/cm^2, 28 psi)
Brake:	
Front Brake Type	Drum brake
Operation	Right hand operation
Rear Brake Type	Drum brake
Operation	Left hand operation
Suspension:	
Front Suspension	Telescopic fork
Rear Suspension	Unit swing
Shock Absorber:	
Front	Coil spring
Rear	Coil spring/Oil damper
Wheel Travel:	
Front Wheel Travel	48 mm (1.89 in)
Rear Wheel Travel	58 mm (2.28 in)

Model	CG50U
Electrical:	
Ignition System	CDI
Generator System	Flywheel magneto
Battery Type or Model	YB4L-B
Battery Capacity	12V 4AH
Headlight Type:	Semi-sealed beam
Bulb Wattege × Quantity:	
Headlight	12V 25W/25W × 1
Tail/Brake light	12V 5W/21W × 1
Flasher light	12V 10W × 4
Meter light	12W 3.4W × 1
Indicator Light Wattage × Quantity:	
"TURN"	12V 1.7W × 1
"HIGH BEAM"	12V 1.7W × 1
"OIL"	12V 3.4W × 1

MAINTENANCE SPECIFICATIONS
Engine

Model	CG50U
Cylinder Head: Warp Limit 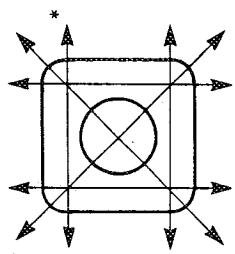	0.03 mm (0.0012 in) *Lines indicate straightedge measurement
Cylinder: Bore Size <Limit> Taper Limit Out of Round Limit	 39.993~40.012 mm (1.575 in) 40.1 mm (1.579 in) 0.05 mm (0.002 in) 0.01 mm (0.0004 in)
Piston: Piston Size Measuring Point* 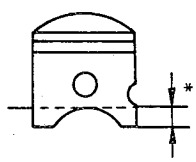 Piston Clearance Oversize: 2nd	 39.952~39.972 mm (1.573~1.574 in) 5 mm (0.2 in) 0.034~0.047 mm (0.0013~0.0018 in) 40.50 mm (1.594 in)
Piston Ring: Sectional Sketch (B×T)/Type Top Ring 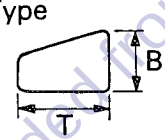 2nd Ring End Gap (Installed): Top Ring 2nd Ring Side Clearance (Installed): Top Ring 2nd Ring	 1.5×1.8 mm (0.059×0.071 in)/Keystone 1.5×1.8 mm (0.059×0.071 in)/Keystone 0.15~0.35 mm (0.006~0.014 in) 0.15~0.35 mm (0.006~0.014 in) 0.03~0.05 mm (0.0012~0.0020 in) 0.03~0.05 mm (0.0012~0.0020 in)
Crankshaft: 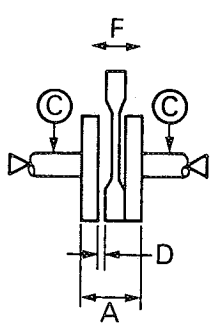 Crank Width "A" Run Out Limit "C" Connecting Rod Big End Side Clearance "D" Small End Free Play "F"	 37.90~37.95 mm (1.492~1.494 in) 0.03 mm (0.0012 in) 0.2~0.5 mm (0.008~0.020 in) 0.4~0.8 mm (0.015~0.031 in)

Model		CG50U
Automatic Centrifugal Clutch:		
Shoe Thickness		4.0 mm (0.16 in)
<Wear Limit>		<2.5 mm (0.10 in)>
Clutch Spring Free Length		109.6 mm (4.31 in)
<Limit>		<94.0 mm (3.70 in)>
Clutch Housing Inside Diameter		105.0 mm (4.13 in)
<Wear Limit>		<105.4 mm (4.15 in)>
Clutch-In Revolution		3,150~3,650 r/min
Clutch-Stall Revolution		4,650~5,350 r/min
V-Belt:		
Width		15 mm (0.59 in)
<Wear Limit>		<13.5 mm (0.53 in)>
Transmission:		
Main Axle Runout Limit		0.08 mm (0.003 in)
Drive Axle Runout Limit		0.08 mm (0.003 in)
Kick Starter:		
Type		Ratchet type
Kick Clip Tension		150~250 g (5.3~8.8 oz)
Carburetor:		
I.D. Mark		2YR00
Main jet	(M.J.)	#90
Jet Needle-clip Position	(J.N.)	3P01-4/5
Main Air Jet	(M.A.J.)	ϕ2.0
Cutaway	(C.A.)	2.5
Pilot Jet	(P.J.)	#42
Pilot Air Screw	(A.S.)	1 and 3/4 turns out
Valve Seat Size	(V.S.)	ϕ1.8
Starter Jet	(G.S.)	#48
Float Height		15.0~17.0 mm (0.59~0.67 in)
Engine Idling speed		1,800 r/min
Reed Valve:		
Valve Stopper Height		4.0~4.4 mm (0.013~0.022 in)
Reed Valve Clearance		Less than 0.2 mm (0.008 in)
Lubrication System:		
Autolube Pump Stroke		0.34~0.55 mm (0.013~0.022 in)

Tightening Torque:

Part to be tightened	Thread size	Q'ty	Tightening torque			Remarks
			Nm	m•kg	ft•lb	
Spark plug	M14×1.4	1	20	2.0	14	
Cylinder head	M 6×1.0	4	10	1.0	7.2	
Stud bolt	M 6×1.0	4	9	0.9	6.5	
Stator assembly	M 6×1.0	2	9	0.9	6.5	
C.D.I. magneto	M10×1.25	1	38	3.8	27	
Air shroud	M 6×1.0	2	9	0.9	6.5	
Fan cover	M 6×1.0	2	9	0.9	6.5	
Fan	M 6×1.0	3	7	0.7	5.1	
Autolube pump	M 5×0.8	2	4	0.4	2.9	
Reed valve (carburetor joint)	M 6×1.0	4	9	0.9	6.5	
Air cleaner Case	M 6×1.0	2	9	0.9	6.5	
Exhaust pipe	M 6×1.0	2	9	0.9	6.5	
Muffler	M 8×1.25	2	33	3.3	24	
Muffler protector	M 6×1.0	2	9	0.9	6.5	
Crankcase	M 6×1.0	6	9	0.9	6.5	
Transmission case cover	M 6×1.0	5	8	0.8	5.8	
Crankcase cover	M 6×1.0	10	9	0.9	6.5	
Transmission oil drain bolt	M 8×1.25	1	18	1.8	13	
Autolube pump cover	M 6×1.0	2	9	0.9	6.5	
Starter motor	M 6×1.0	2	13	1.3	9.4	
Kick crank	M 6×1.0	1	10	1.0	7.2	
Clutch	M28×1.0	1	50	5.0	36	
Clutch housing	M10×1.0	1	40	4.0	29	
Primary sheave	M10×1.25	1	33	3.3	24	
Idle gear plate	M 6×1.0	2	9	0.9	6.5	
Oil seal stopper plate	M 6×1.0	1	9	0.9	6.5	

Chassis

Model	CG50U
Steering System:	
Steering Bearing Type	Ball bearing
No./Size of Steel Balls	
Upper	5/32 in 26 pcs.
Lower	5/32 in 26 pcs.
Front Suspension:	
Front Fork Travel	48.6 mm (1.91 in)
Fork spring Free Length	91.5 mm (3.60 in)
<Limit>	<87 mm (3.42 in)>
Spring Rate	11.28 N/mm (1.128 kg/mm, 62.1 lb/in)
Stroke	Zero~48.6 mm (Zero~1.91 in)
Optional Spring	No.
Rear Suspension:	
Shock absorber Travel	45 mm (1.77 in)
Spring Free Length	191.5 mm (7.54 in)
Spring Fitting Length	181.5 mm (7.15 in)
Spring Rate: (K1)	38.0 N/mm (3.8 kg/mm, 209.3 lb/in)
(K2)	49.0 N/mm (4.9 kg/mm, 269.9 lb/in)
(K3)	74.0 N/mm (7.4 kg/mm, 407.6 lb/in)
Stroke: (K1)	Zero~20 mm (Zero~0.79 in)
(K2)	20~35 mm (0.79~1.38 in)
(K3)	35~45 mm (1.38~1.77 in)
Optional Spring	No.
Wheel:	
Front Wheel Type	Panel wheel
Rear Wheel Type	Panel wheel
Front Rim Size/Material	1.85×10 DC/Steel
Rear Rim Size/Material	1.85×10 DC/Steel
Rim Runout Limit:	
Vertical	2.0 mm (0.08 in)
Lateral	2.0 mm (0.08 in)
Front Drum Brake:	
Type	Leading, Trailing
Drum Inside Diameter	80.0 mm (3.15 in)
<Wear Limit>	<80.5 mm (3.17 in)>
Lining Thickness	3.5 mm (0.14 in)
<Wear Limit>	<2.0 mm (0.08 in)>
Rear Drum Brake:	
Type	Leading, Trailing
Drum Inside Diameter	95.0 mm (3.74 in)
<Wear Limit>	<95.5 mm (3.76 in)>
Lining Thickness	3.0 mm (0.12 in)
<Wear Limit>	<2.0 mm (0.08 in)>

Tightening torque:

Part to be tightened	Thread size	Q'ty	Tightening torque			Remarks
			Nm	m•kg	ft•lb	
Frame and engine bracket	M10×1.25	2	42	4.2	30	
Engine bracket and engine	M10×1.25	1	42	4.2	30	
Rear shock absorber (Upper)	M10×1.25	1	32	3.2	23	
(Lower)	M 8×1.25	1	18	1.8	13	
Handlebar and steering column	M10×1.25	1	60	6.0	43	
Ring nut (Steering column)	M25	1	30	3.0	22	
Front wheel axle	M10×1.25	1	35	3.5	25	
Front brake cam lever	M 5×0.8	1	4	0.4	2.9	
Rear brake cable holder	M 6×1.0	1	9	0.9	6.5	
Rear brake cam lever	M 5×0.8	1	4	0.4	2.9	
Rear wheel axle	M14×1.5	1	95	9.5	68	
Rear brake shoe plate	M 8×1.25	3	18	1.8	13	LT
Rear stay	M 6×1.0	4	10	1.0	7.2	
Seat bracket and seat	M 6×1.0	2	7	0.7	5.1	
Rear carrier	M 6×1.0	4	7	0.7	5.1	

Electrical

Model	CG50U
Voltage:	
Ignition System:	
Ignition Timing (B.T.D.C.)	14° at 5,000 r/min
Advancer Type	Electrical

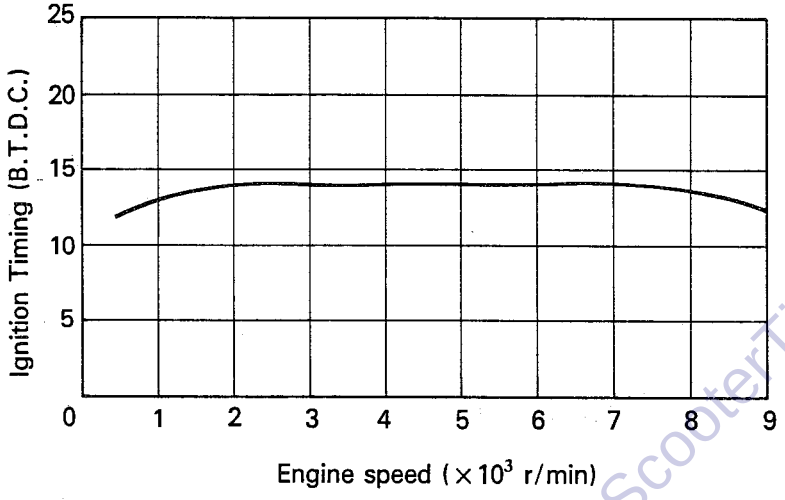

C.D.I.:	
Magneto Model/Manufacturer	2JA/YAMAHA
Pickup Coil Resistance (Color)	400~600Ω at 20°C (68°F) (White/Red—Black)
Source Coil Resistance (Color)	640~960Ω at 20°C (68°F) (Black/Red—Black)
C.D.I. Unit-Model/Manufacturer	2JA/YAMAHA
Ignition Coil:	
Model/Manufacturer	2JA/YAMAHA
Primary Coil Resistance	0.56~0.84Ω at 20°C (68°F)
Secondary Coil Resistance	5.68~8.52kΩ at 20°C (68°F)
Charging System/Type:	Flywheel magneto
C.D.I. Magneto:	
Model/Manufacturer	F2JA/YAMAHA
Charging Coil Resistance (Color)	0.48~0.72Ω at 20°C (68°F) (White—Black)
Charging Current	
Full Charged Battery (1.280)	0.5A or less at 3,000 r/min
Half Charged Battery (1.180)	1.0A or more at 3,000 r/min
Charging Voltage	13~14V at 4,000 r/min
Lighting Coil Resistance (Color)	0.4~0.6Ω at 20°C (68°F) (Yellow/Red—Black)
Lighting Voltage	11.5~13.5V at 4,000 r/min
Voltage Regulator:	
Type	Semi conductor short circuit type
Model/Manufacturer	EHU-01TR05 or SU232Y/MATSUSHITA or STANLEY
No Load Regulated Voltage	13.5~14.5V

Model	CG50U	
Rectifier:		
Model/Manufacturer	EHU-01TR21/MATSUSHITA or SH592-12/ SHINDENGEN	
Capacity	5A	
Withstand Voltage	240V	
Battery:		
Capacity	12V, 4AH	
Specific Gravity	1.280	
Starter Motor:		
Model	DA5AG	2EX
Manufacturer	NIPPON DENSO	YAMAHA
Out Put	0.15 kW	0.14 kW
Armature Coil Resistance	0.08~0.10Ω at 20°C (68°F)	0.07~0.09Ω at 20°C (68°F)
Brush Length	5.5 mm (0.22 in)	3.9 mm (0.15 in)
<Wear Limit>	<2.5 mm (0.10 in)>	<0.9 mm (0.035 in)>
Brush Spring Pressure	250~450 g (8.8~15.9 oz)	560~840 g (19.8~29.7 oz)
Commutator Diameter	15.5 mm (0.61 in)	15.8 mm (0.62 in)
<Wear Limit>	<14.5 mm (0.57 in)>	<14.8 mm (0.58 in)>
Mica Undercut	0.9~1.2 mm (0.035~0.047 in)	1.15 mm (0.045 in)
Starter Relay:		
Model/Manufacturer	27V/OMRON	27V/MATSUSHITA
Amperage Rating	20A	20A
Coil Resistance	54~66Ω at 20°C (68°F)	72~88Ω at 20°C (68°F)
Horn:		
Type/Quantity	Plain type/1 pc	
Model/Manufacturer	GF-12/NIKKO	
Maximum Amperage	1.5A	
Flasher Relay:		
Type	Condenser type	
Model/Manufacturer	FZ222SD/NIPPON DENSO	
Self Cancelling Device	No	
Flasher Frequency	60~120 cycle/min	
Wattage	10W×2+3.4W	
Oil Level Gauge:		
Model/Manufacturer	2JA/TAIHEIYOU ASTI	
Circuit Breaker:		
Type	Fuse	
Amperage for Individual Circuit×Quantity:		
Main	7A×1	

GENERAL TORQUE SPECIFICATIONS

This chart specifies torque for standard fasteners with standard I.S.O. pitch threads. Torque specifications for special components or assemblies are included in the applicable sections of this book. To avoid warpage, tighten multi-fastener assemblies in a crisscross fashion, in progressive stages, until full torque is reached. Unless otherwise specified, torque specifications call for clean, dry threads. Components should be at room temperature.

A (Nut)	B (Bolt)	General torque specifications		
		Nm	m•kg	ft•lb
10 mm	6 mm	6	0.6	4.3
12 mm	8 mm	15	1.5	11
14 mm	10 mm	30	3.0	22
17 mm	12 mm	55	5.5	40
19 mm	14 mm	85	8.5	61
22 mm	16 mm	130	13.0	94

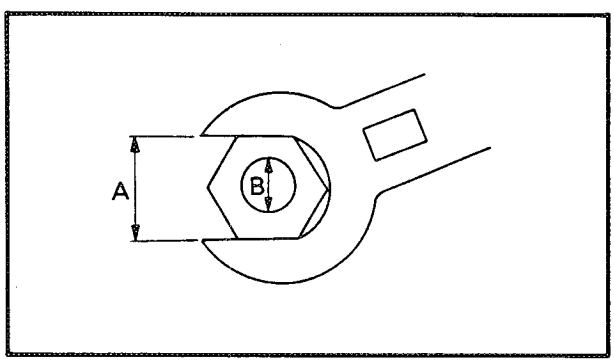

A: Distance cross flats
B: Outside thread diameter

DEFINITION OF UNITS

Unit	Read	Definition	Measure
mm cm	millimeter centimeter	10^{-3}meter 10^{-2}meter	Length Length
kg	kilogram	10^3gram	Weight
N	Newton	1 kg × m/sec^2	Force
Nm m•kg	Newton meter Meter kilogram	N × m m × kg	Torque Torque
Pa N/mm	Pascal Newton per millimeter	N/m^2 N/mm	Pressure Spring rate
L cm^3	Liter Cubic centimeter	—	Volume or Capacity
r/min	Rotation per minute	—	Engine Speed

CABLE ROUTING

① Front brake cable
② Flasher relay
③ Rear brake cable
④ Speedometer cable
⑤ Throttle cable
⑥ Band
⑦ Main switch
⑧ Horn
⑨ Rectifier/Regulator

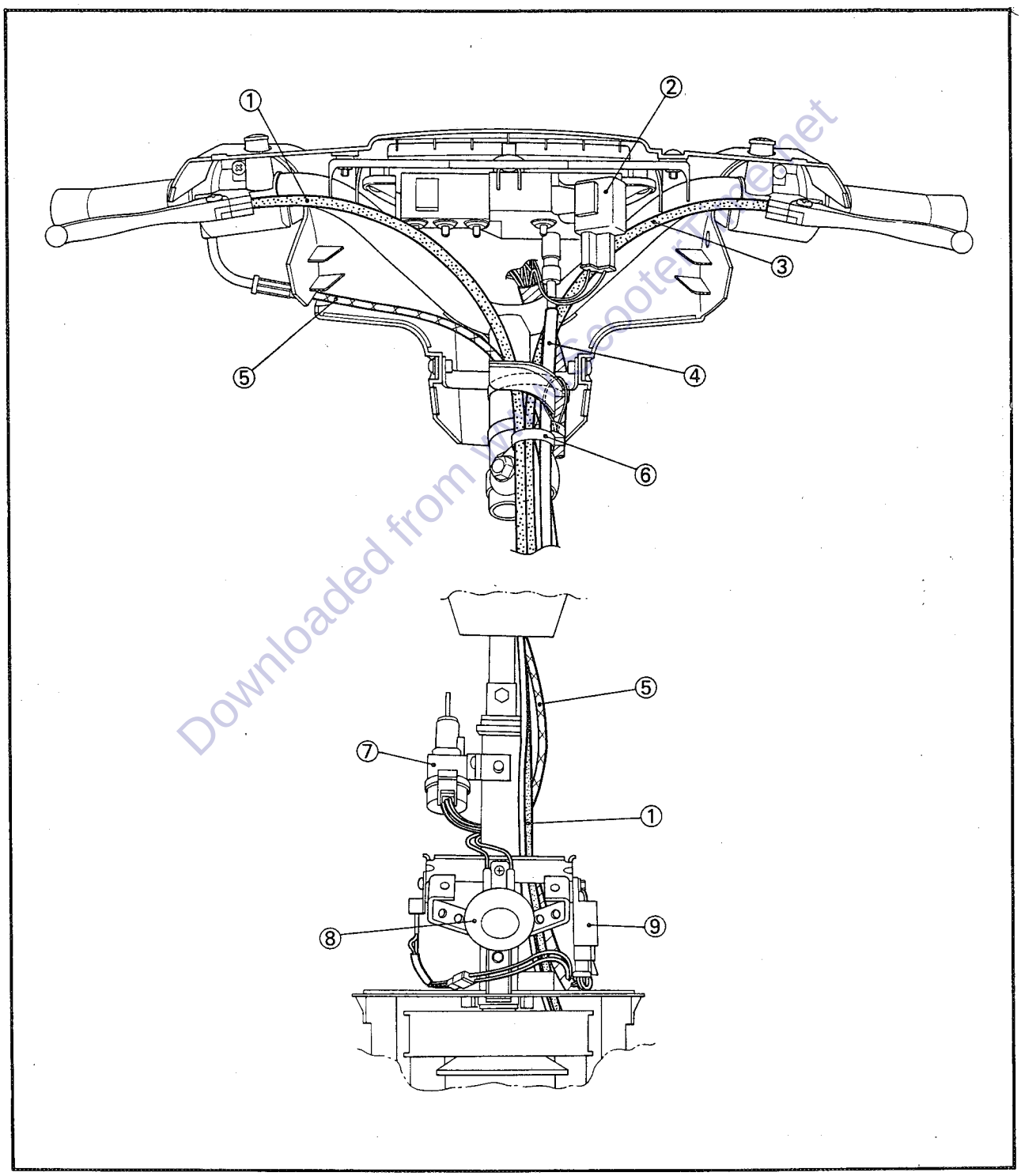

① Rear brake cable
② Throttle cable
③ Band
④ Wireharness
⑤ Starter relay
⑥ CDI unit
⑦ Oil level gauge
⑧ Battery positive lead
⑨ Fuse
⑩ Fuel sender
⑪ Clamp

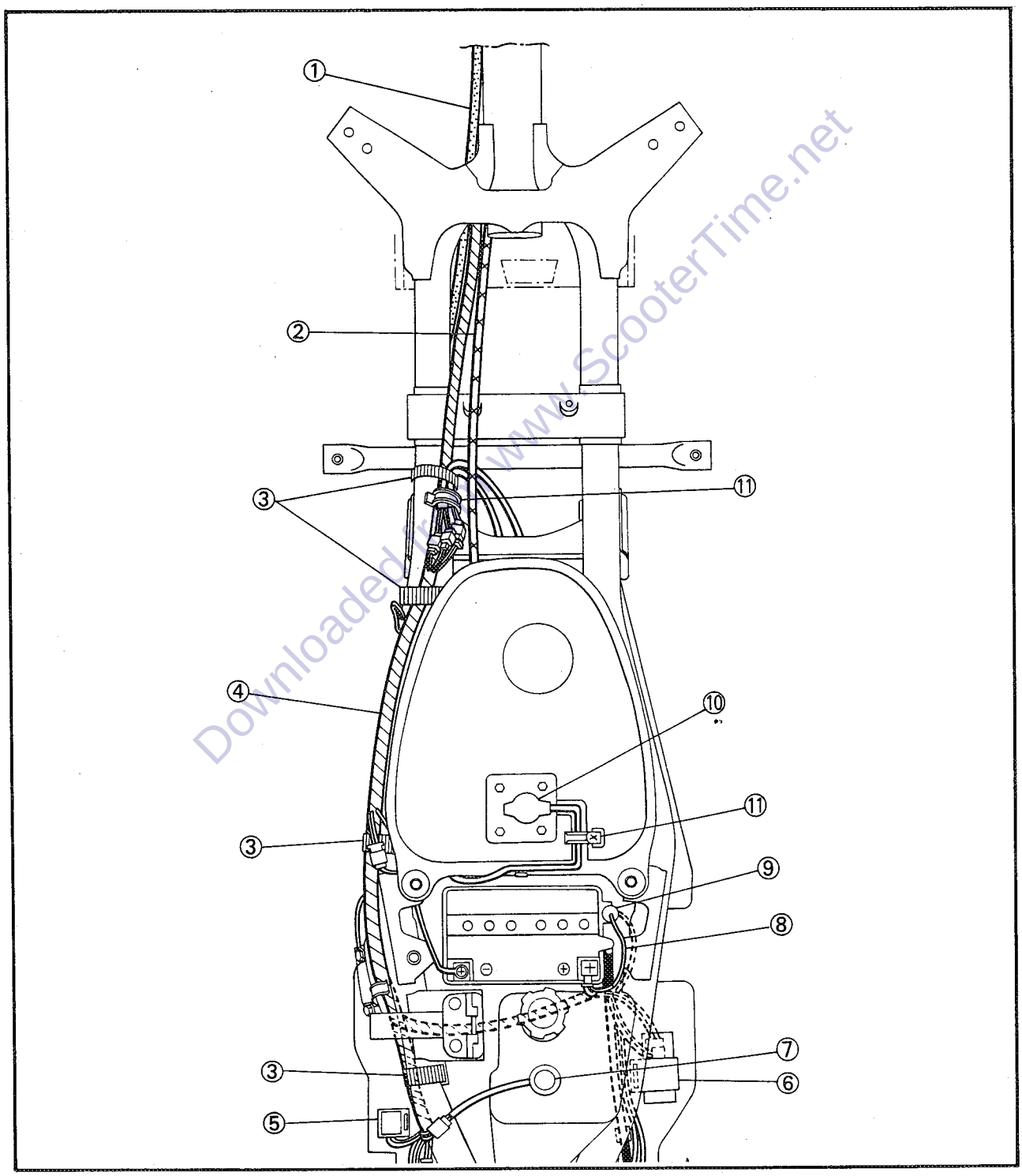

① Front brake cable
② Speedometer cable
③ Rectifier/Regulator
④ Throttle cable
⑤ Fuel hose
⑥ Vacuum hose
⑦ Ignition coil
⑧ Rear brake cable
⑨ Band

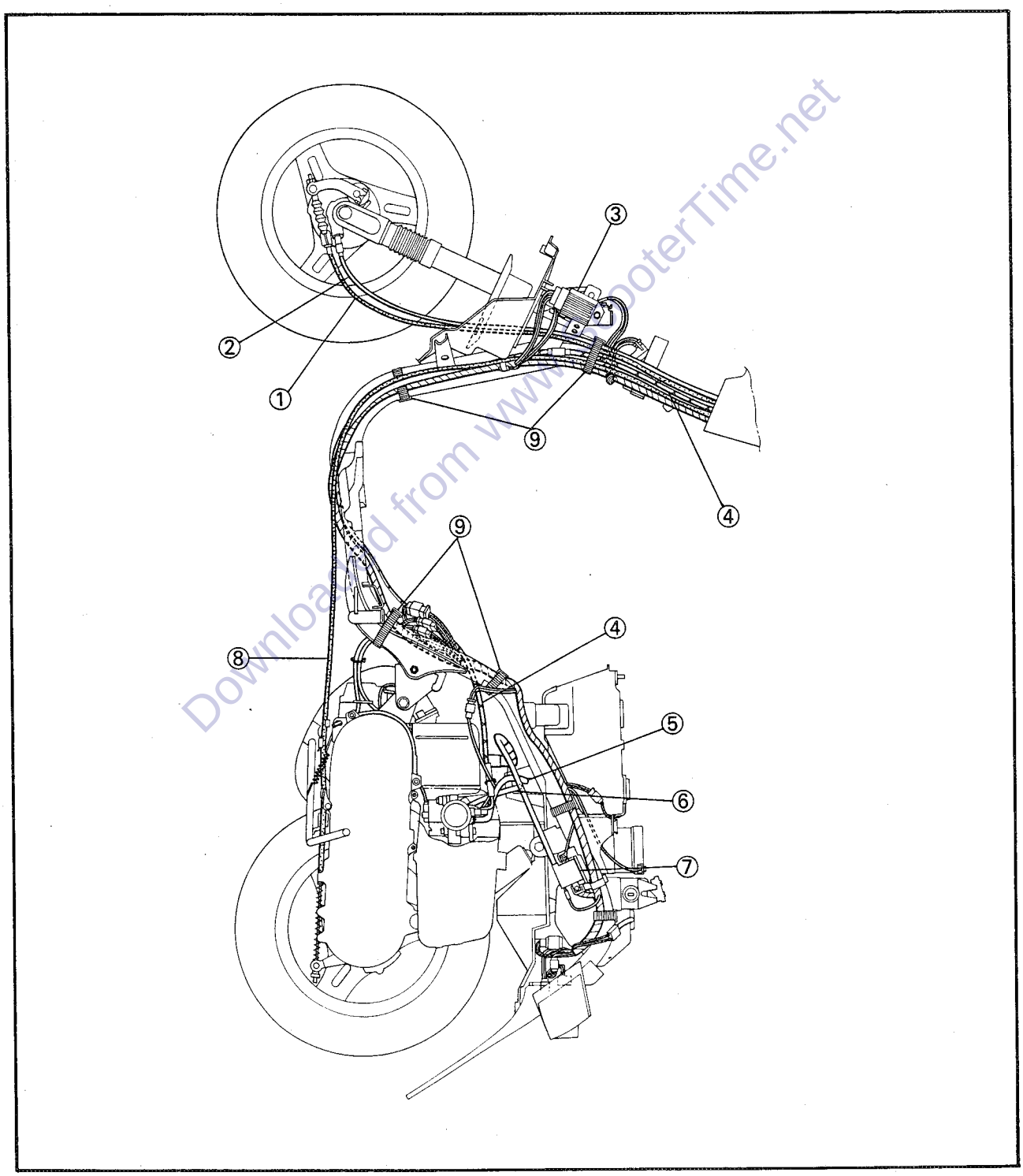

① Battery breather pipe
② CDI unit
③ Oil level gauge
④ Fuse
⑤ Auto choke unit
⑥ Throttle cable
⑦ Starter motor lead
⑧ CDI magneto lead

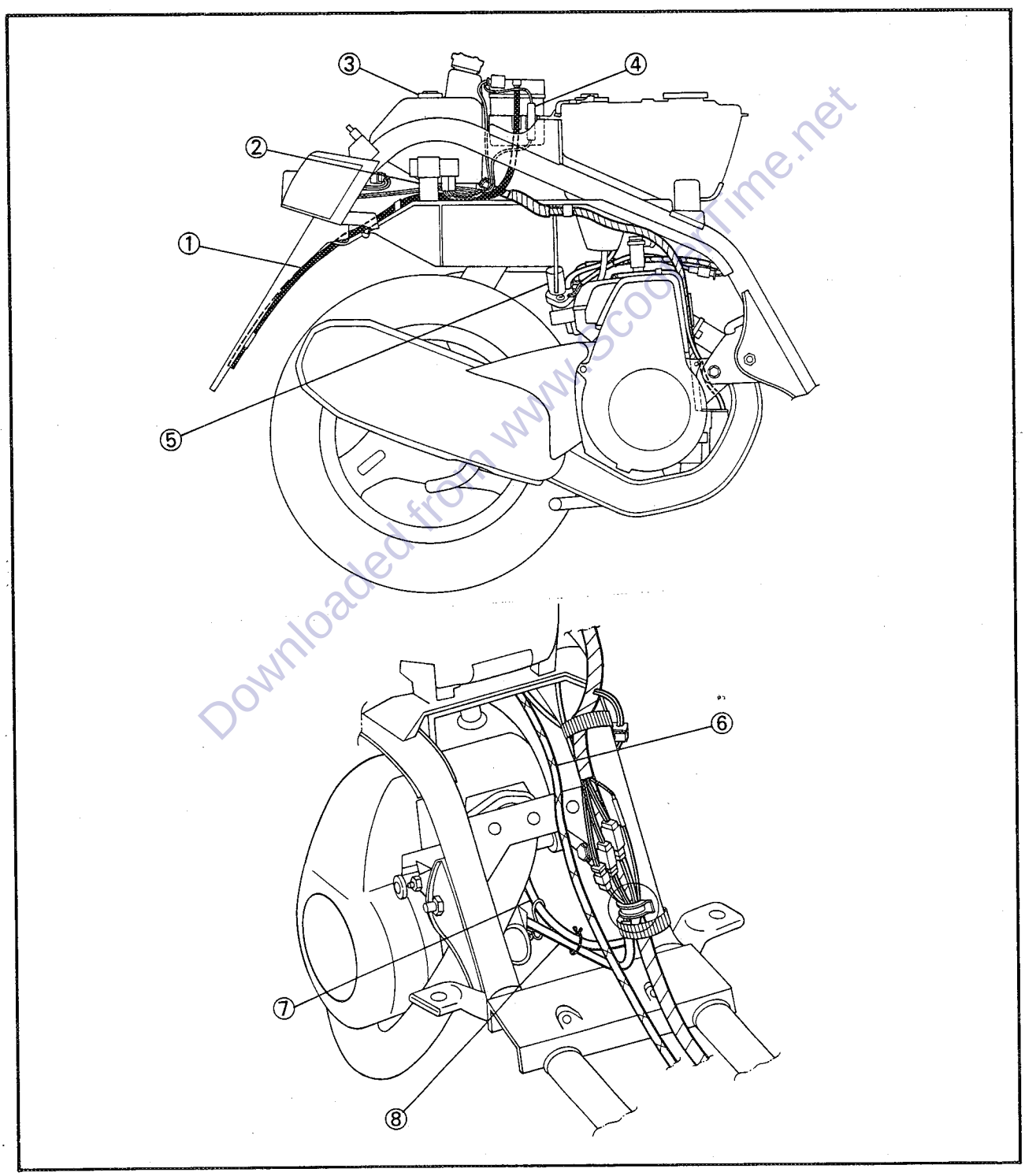

CG50U WIRING DIAGRAM

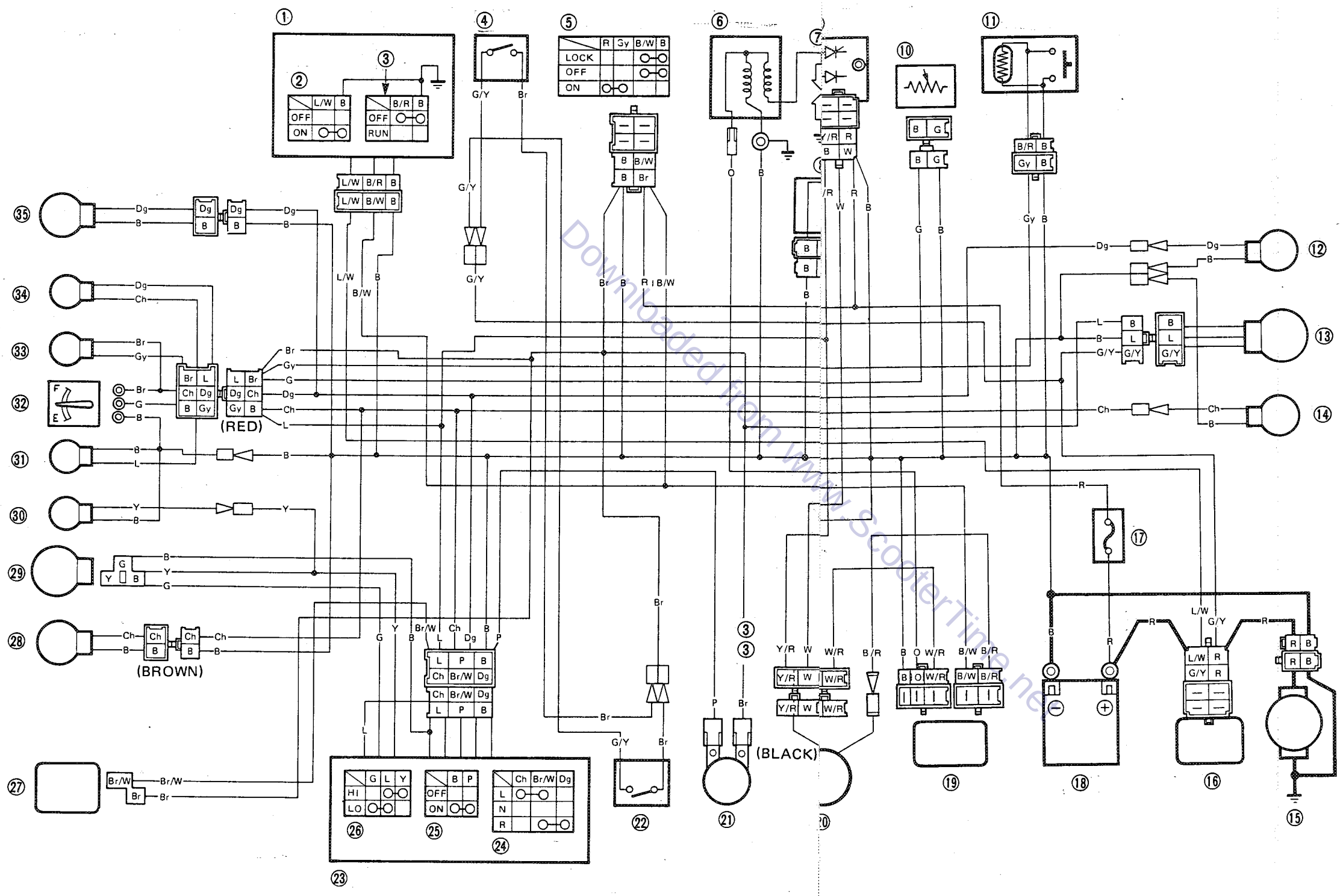

① Handlebar switch (R)
② "START" switch
③ "ENGINE STOP" switch
④ Front brake switch
⑤ Main switch
⑥ Ignition coil
⑦ Spark plug
⑧ Auto choke
⑨ Rectifier/Regulator
⑩ Fuel sender
⑪ Oil level gauge
⑫ Rear flasher light (R)
⑬ Tail/brake light
⑭ Rear flasher light (L)
⑮ Starter motor
⑯ Starter switch
⑰ Fuse
⑱ Battery
⑲ CDI unit
⑳ CDI magneto
㉑ Horn
㉒ Rear brake switch
㉓ Handlebar switch (L)
㉔ "TURN" switch
㉕ "HORN" switch
㉖ "LIGHTS" (Dimmer) switch
㉗ Flasher relay
㉘ Front flasher light (L)
㉙ Headlight
㉚ "HIGH BEAM" indicator light
㉛ Meter light
㉜ Fuel meter
㉝ "OIL" warning light
㉞ "TURN" indicator light
㉟ Front flasher light (R)

COLOR CODE

B . . . . . .Black	O . . . . . .Orange	Dg . . . . . .Dark green	Y/R . . . . .Yellow/Red
L . . . . . .Blue	P . . . . . .Pink	W . . . . . .White	G/Y . . . . .Green/Yellow
Y . . . . . .Yellow	Ch . . . . . .Chocolate	B/R . . . . .Black/Red	Br/W . . . .Brown/White
G . . . . . .Green	Br . . . . . .Brown	B/W . . . . .Black/White	W/R . . . . .White/Red
R . . . . . .Red	Gy . . . . . .Gray	L/W . . . . .Blue/White	

Yamaha Motor Canada Ltd.
480 Gordon Baker Road
Toronto, ON M2H 3B4