40650

JEEP WRANGLER / YJ

1987-95 REPAIR MANUAL

CHILTON

Covers all U.S. and Canadian models of Jeep Wrangler and YJ

The First Step In Repair

INCLUDES WIRING AND VACUUM DIAGRAMS

JEEP WRANGLER/YJ 1987-95 REPAIR MANUAL

CHILTON

Covers all U.S. and Canadian models of Jeep Wrangler and YJ

by Martin J. Gunther

CHILTON Automotive Books

PUBLISHED BY HAYNES NORTH AMERICA, Inc.

Manufactured in USA
© 1995 Haynes North America, Inc.
ISBN 0-8019-9092-0
Library of Congress Catalog Card No. 94-071961
4567890123 9876543210

Haynes Publishing Group
Sparkford Nr Yeovil
Somerset BA22 7JJ England

Haynes North America, Inc
861 Lawrence Drive
Newbury Park
California 91320 USA

ABCDE
FGHIJ
K

2F1

Chilton is a registered trademark of W.G. Nichols, Inc., and has been licensed to Haynes North America, Inc.

Contents

1 GENERAL INFORMATION AND MAINTENANCE

1-2 HOW TO USE THIS BOOK
1-2 TOOLS AND EQUIPMENT
1-4 SERVICING YOUR VEHICLE SAFELY
1-5 FASTENERS, MEASUREMENTS AND CONVERSIONS
1-8 SERIAL NUMBER IDENTIFICATION
1-9 ROUTINE MAINTENANCE
1-21 FLUIDS AND LUBRICANTS
1-30 TRAILER TOWING
1-31 TOWING THE VEHICLE
1-32 JACKING

2 ENGINE PERFORMANCE AND TUNE-UP

2-2 TUNE-UP PROCEDURES
2-4 FIRING ORDERS
2-4 ELECTRONIC IGNITION
2-7 IGNITION TIMING
2-7 IDLE ADJUSTMENTS
2-8 VALVE LASH

3 ENGINE AND ENGINE OVERHAUL

3-2 ENGINE ELECTRICAL
3-8 ENGINE MECHANICAL
3-44 EXHAUST SYSTEM

4 DRIVEABILITY AND EMISSIONS CONTROLS

4-2 EXHAUST EMISSION CONTROLS
4-6 COMPUTERIZED EMISSION CONTROL (CEC) FEEDBACK SYSTEM
4-23 THROTTLE BODY (SINGLE POINT) FUEL INJECTION
4-38 MULTI-POINT FUEL INJECTION (MFI) SYSTEM
4-45 VACUUM DIAGRAMS

5 FUEL SYSTEM

5-2 CARBURETED FUEL SYSTEM
5-5 THROTTLE BODY (SINGLE POINT) INJECTION FUEL SYSTEM
5-11 MULTI-POINT FUEL INJECTION (MFI) SYSTEM
5-14 FUEL TANK

6 CHASSIS ELECTRICAL

6-2 UNDERSTANDING AND TROUBLESHOOTING ELECTRICAL SYSTEMS
6-7 HEATING AND AIR CONDITION
6-10 WINDSHIELD WIPERS
6-11 INSTRUMENTS AND SWITCHES
6-14 RADIO
6-14 CRUISE CONTROL
6-16 LIGHTING
6-16 TRAILER WIRING
6-19 CIRCUIT PROTECTION
6-21 WIRING DIAGRAMS

Contents

7-2 MANUAL TRANSMISSION
7-4 CLUTCH
7-8 AUTOMATIC TRANSMISSION
7-12 TRANSFER CASE
7-12 DRIVELINE
7-14 FRONT DRIVE AXLE
7-18 REAR AXLE

DRIVE TRAIN **7**

8-2 FRONT SUSPENSION
8-6 REAR SUSPENSION
8-8 STEERING

SUSPENSION AND STEERING **8**

9-2 BRAKE OPERATING SYSTEM
9-6 FRONT DISC BRAKES
9-12 REAR DRUM BRAKES
9-15 PARKING BRAKE
9-17 ANTI-LOCK BRAKE SYSTEM

BRAKES **9**

10-2 EXTERIOR
10-11 INTERIOR

BODY AND TRIM **10**

10-17 GLOSSARY

GLOSSARY

10-21 MASTER INDEX

MASTER INDEX

See last page for information on additional titles

SAFETY NOTICE

Proper service and repair procedures are vital to the safe, reliable operation of all motor vehicles, as well as the personal safety of those performing repairs. This manual outlines procedures for servicing and repairing vehicles using safe, effective methods. The procedures contain many NOTES, CAUTIONS and WARNINGS which should be followed, along with standard procedures to eliminate the possibility of personal injury or improper service which could damage the vehicle or compromise its safety.

It is important to note that repair procedures and techniques, tools and parts for servicing motor vehicles, as well as the skill and experience of the individual performing the work vary widely. It is not possible to anticipate all of the conceivable ways or conditions under which vehicles may be serviced, or to provide cautions as to all possible hazards that may result. Standard and accepted safety precautions and equipment should be used when handling toxic or flammable fluids, and safety goggles or other protection should be used during cutting, grinding, chiseling, prying, or any other process that can cause material removal or projectiles.

Some procedures require the use of tools specially designed for a specific purpose. Before substituting another tool or procedure, you must be completely satisfied that neither your personal safety, nor the performance of the vehicle will be endangered.

Although information in this manual is based on industry sources and is complete as possible at the time of publication, the possibility exists that some car manufacturers made later changes which could not be included here. While striving for total accuracy, the authors or publishers cannot assume responsibility for any errors, changes or omissions that may occur in the compilation of this data.

PART NUMBERS

Part numbers listed in this reference are not recommendations by Haynes North America, Inc. for any product brand name. They are references that can be used with interchange manuals and aftermarket supplier catalogs to locate each brand supplier's discrete part number.

SPECIAL TOOLS

Special tools are recommended by the vehicle manufacturer to perform their specific job. Use has been kept to a minimum, but where absolutely necessary, they are referred to in the text by the part number of the tool manufacturer. These tools can be purchased, under the appropriate part number, from your local dealer or regional distributor, or an equivalent tool can be purchased locally from a tool supplier or parts outlet. Before substituting any tool for the one recommended, read the SAFETY NOTICE at the top of this page.

ACKNOWLEDGMENTS

The publisher expresses appreciation to Chrysler Corporation for their generous assistance.

All rights reserved. No part of this book may be reproduced or transmitted in any form or by any means, electronic or mechanical, including photocopying, recording or by any information storage or retrieval system, without permission in writing from the copyright holder.

While every attempt is made to ensure that the information in this manual is correct, no liability can be accepted by the authors or publishers for loss, damage or injury caused by any errors in, or omissions from, the information given.

HOW TO USE THIS BOOK 1-2
WHERE TO BEGIN 1-2
AVOIDING TROUBLE 1-2
MAINTENANCE OR REPAIR? 1-2
AVOIDING THE MOST COMMON MISTAKES 1-2
TOOLS AND EQUIPMENT 1-2
SPECIAL TOOLS 1-4
SERVICING YOUR VEHICLE SAFELY 1-4
DO'S 1-4
DON'TS 1-5
FASTENERS, MEASUREMENTS AND CONVERSIONS 1-5
BOLTS, NUTS AND OTHER THREADED RETAINERS 1-5
TORQUE 1-6
TORQUE WRENCHES 1-6
TORQUE ANGLE METERS 1-7
STANDARD AND METRIC MEASUREMENTS 1-7
SERIAL NUMBER IDENTIFICATION 1-8
VEHICLE 1-8
ENGINE 1-8
2.5L ENGINE 1-8
4.0L AND 4.2L ENGINES 1-8
TRANSMISSION/TRANSFER CASE/AXLE 1-8
ROUTINE MAINTENANCE 1-9
AIR CLEANER 1-9
REMOVAL & INSTALLATION 1-9
FUEL FILTER 1-10
REMOVAL & INSTALLATION 1-10
PCV VALVE 1-11
OPERATION 1-11
SERVICING 1-12
CRANKCASE VENT FILTER 1-12
CRANKCASE VENTILATION (CCV) SYSTEM 1-12
EVAPORATIVE CANISTER 1-12
BATTERY 1-12
PRECAUTIONS 1-12
GENERAL MAINTENANCE 1-12
BATTERY FLUID 1-13
CABLES 1-13
CHARGING 1-14
REPLACEMENT 1-14
BELTS 1-14
ADJUSTING 1-15
HOSES 1-17
REMOVAL & INSTALLATION 1-17
AIR CONDITIONING SYSTEM 1-18
SYSTEM SERVICE & REPAIR 1-18
PREVENTIVE MAINTENANCE 1-18
SYSTEM INSPECTION 1-19
WINDSHIELD WIPERS 1-19
ELEMENT (REFILL) CARE & REPLACEMENT 1-19
TIRES AND WHEELS 1-19
TIRE ROTATION 1-19
TIRE DESIGN 1-20
TIRE STORAGE 1-20
INFLATION & INSPECTION 1-20
FLUIDS AND LUBRICANTS 1-21
FLUID DISPOSAL 1-21
FUEL AND OIL RECOMMENDATIONS 1-21
FUEL 1-21
ENGINE OIL 1-22
ENGINE 1-22
OIL LEVEL CHECK 1-22
OIL AND FILTER CHANGE 1-22
MANUAL TRANSMISSION 1-23
FLUID LEVEL CHECK 1-23
DRAIN AND REFILL 1-23
AUTOMATIC TRANSMISSION 1-23
FLUID LEVEL CHECK 1-23
DRAIN, FILTER SERVICE AND REFILL 1-24
TRANSFER CASE 1-24
FLUID LEVEL CHECK 1-24
DRAIN AND REFILL 1-25
DRIVE AXLE 1-25
FLUID LEVEL CHECK 1-25
DRAIN AND REFILL 1-26
COOLING SYSTEM 1-26
FLUID LEVEL CHECK 1-26
DRAIN, FLUSH AND REFILL 1-27
RADIATOR CAP INSPECTION 1-28
BRAKE MASTER CYLINDER 1-28
FLUID LEVEL CHECK 1-28
CLUTCH MASTER CYLINDER 1-28
FLUID LEVEL CHECK 1-28
POWER STEERING PUMP 1-28
FLUID LEVEL CHECK 1-28
MANUAL STEERING GEAR 1-29
FLUID LEVEL CHECK 1-29
CHASSIS GREASING 1-29
STEERING LINKAGE 1-29
PARKING BRAKE LINKAGE 1-29
AUTOMATIC TRANSMISSION LINKAGE 1-29
BODY LUBRICATION AND MAINTENANCE 1-29
LOCK CYLINDERS 1-29
DOOR HINGES AND HINGE CHECKS 1-30
TAILGATE OR LIFTGATE 1-30
BODY DRAIN HOLES 1-30
FRONT HUB AND WHEEL BEARINGS 1-30
REMOVAL, PACKING AND INSTALLATION 1-30
TRAILER TOWING 1-30
GENERAL RECOMMENDATIONS 1-30
TRAILER WEIGHT 1-30
HITCH (TONGUE) WEIGHT 1-30
COOLING 1-31
ENGINE 1-31
TRANSMISSION 1-31
TOWING THE VEHICLE 1-31
SLING-TYPE TOWING 1-31
FRONT END 1-31
REAR END 1-31
FLAT TOWING 1-31
FLATBED 1-31
ON-GROUND 1-31
JACKING 1-32
SPECIFICATIONS CHARTS
CONVERSION FACTORS 1-7
ENGINE IDENTIFICATION 1-9
PREVENTIVE MAINTENANCE 1-32
CAPACITIES 1-32

1

GENERAL INFORMATION AND MAINTENANCE

HOW TO USE THIS BOOK 1-2
TOOLS AND EQUIPMENT 1-2
SERVICING YOUR VEHICLE SAFELY 1-4
FASTENERS, MEASUREMENTS AND CONVERSIONS 1-5
SERIAL NUMBER IDENTIFICATION 1-8
ROUTINE MAINTENANCE 1-9
FLUIDS AND LUBRICANTS 1-21
TRAILER TOWING 1-30
TOWING THE VEHICLE 1-31
JACKING 1-32

HOW TO USE THIS BOOK

This Chilton's Total Car Care manual for the Jeep Wrangler is intended to help you learn more about the inner workings of your vehicle while saving you money on its upkeep and operation.

The beginning of the book will likely be referred to the most, since that is where you will find information for maintenance and tune-up. The other sections deal with the more complex systems of your vehicle. Systems (from engine through brakes) are covered to the extent that the average do-it-yourselfer can attempt. This book will not explain such things as rebuilding a differential because the expertise required and the special tools necessary make this uneconomical. It will, however, give you detailed instructions to help you change your own brake pads and shoes, replace spark plugs, and perform many more jobs that can save you money and help avoid expensive problems.

A secondary purpose of this book is a reference for owners who want to understand their vehicle and/or their mechanics better.

Where to Begin

Before removing any bolts, read through the entire procedure. This will give you the overall view of what tools and supplies will be required. So read ahead and plan ahead. Each operation should be approached logically and all procedures thoroughly understood before attempting any work.

If repair of a component is not considered practical, we tell you how to remove the part and then how to install the new or rebuilt replacement. In this way, you at least save labor costs.

Avoiding Trouble

Many procedures in this book require you to "label and disconnect . . ." a group of lines, hoses or wires. Don't be think you can remember where everything goes—you won't. If you hook up vacuum or fuel lines incorrectly, the vehicle may run poorly, if at all. If you hook up electrical wiring incorrectly, you may instantly learn a very expensive lesson.

You don't need to know the proper name for each hose or line. A piece of masking tape on the hose and a piece on its fitting will allow you to assign your own label. As long as you remember your own code, the lines can be reconnected by matching your tags. Remember that tape will dissolve in gasoline or solvents; if a part is to be washed or cleaned, use another method of identification. A permanent felt-tipped marker or a metal scribe can be very handy for marking metal parts. Remove any tape or paper labels after assembly.

Maintenance or Repair?

Maintenance includes routine inspections, adjustments, and replacement of parts which show signs of normal wear. Maintenance compensates for wear or deterioration. Repair implies that something has broken or is not working. A need for a repair is often caused by lack of maintenance. for example: draining and refilling automatic transmission fluid is maintenance recommended at specific intervals. Failure to do this can shorten the life of the transmission/transaxle, requiring very expensive repairs. While no maintenance program can prevent items from eventually breaking or wearing out, a general rule is true: MAINTENANCE IS CHEAPER THAN REPAIR.

Two basic mechanic's rules should be mentioned here. First, whenever the left side of the vehicle or engine is referred to, it means the driver's side. Conversely, the right side of the vehicle means the passenger's side. Second, screws and bolts are removed by turning counterclockwise, and tightened by turning clockwise unless specifically noted.

Safety is always the most important rule. Constantly be aware of the dangers involved in working on an automobile and take the proper precautions. Please refer to the information in this section regarding SERVICING YOUR VEHICLE SAFELY and the SAFETY NOTICE on the acknowledgment page.

Avoiding the Most Common Mistakes

Pay attention to the instructions provided. There are 3 common mistakes in mechanical work:

1. Incorrect order of assembly, disassembly or adjustment. When taking something apart or putting it together, performing steps in the wrong order usually just costs you extra time; however, it CAN break something. Read the entire procedure before beginning. Perform everything in the order in which the instructions say you should, even if you can't see a reason for it. When you're taking apart something that is very intricate, you might want to draw a picture of how it looks when assembled in order to make sure you get everything back in its proper position. When making adjustments, perform them in the proper order. One adjustment possibly will affect another.

2. Overtorquing (or undertorquing). While it is more common for overtorquing to cause damage, undertorquing may allow a fastener to vibrate loose causing serious damage. Especially when dealing with aluminum parts, pay attention to torque specifications and utilize a torque wrench in assembly. If a torque figure is not available, remember that if you are using the right tool to perform the job, you will probably not have to strain yourself to get a fastener tight enough. The pitch of most threads is so slight that the tension you put on the wrench will be multiplied many times in actual force on what you are tightening.

There are many commercial products available for ensuring that fasteners won't come loose, even if they are not torqued just right (a very common brand is Loctite_). If you're worried about getting something together tight enough to hold, but loose enough to avoid mechanical damage during assembly, one of these products might offer substantial insurance. Before choosing a threadlocking compound, read the label on the package and make sure the product is compatible with the materials, fluids, etc. involved.

3. Crossthreading. This occurs when a part such as a bolt is screwed into a nut or casting at the wrong angle and forced. Crossthreading is more likely to occur if access is difficult. It helps to clean and lubricate fasteners, then to start threading the bolt, spark plug, etc. with your fingers. If you encounter resistance, unscrew the part and start over again at a different angle until it can be inserted and turned several times without much effort. Keep in mind that many parts have tapered threads, so that gentle turning will automatically bring the part you're threading to the proper angle. Don't put a wrench on the part until it's been tightened a couple of turns by hand. If you suddenly encounter resistance, and the part has not seated fully, don't force it. Pull it back out to make sure it's clean and threading properly.

Be sure to take your time and be patient, and always plan ahead. Allow yourself ample time to perform repairs and maintenance.

TOOLS AND EQUIPMENT

See Figures 1 thru 15

Without the proper tools and equipment it is impossible to properly service your vehicle. It would be virtually impossible to catalog every tool that you would need to perform all of the operations in this book. It would be unwise for the amateur to rush out and buy an expensive set of tools on the theory that he/she may need one or more of them at some time.

The best approach is to proceed slowly, gathering a good quality set of those tools that are used most frequently. Don't be misled by the low cost of bargain tools. It is far better to spend a little more for better quality. Forged wrenches, 6 or 12-point sockets and fine tooth ratchets are by far preferable to their less expensive counterparts. As any good mechanic can tell you, there are few worse experiences than trying to work on a vehicle with bad tools. Your monetary savings will be far outweighed by frustration and mangled knuckles.

Begin accumulating those tools that are used most frequently: those associated with routine maintenance and tune-up. In addition to the normal assortment of screwdrivers and pliers; you should have the following tools:

- Wrenches/sockets and combination open end/box end wrenches in sizes 1/8–3/4 in. and/or 3mm–19mm 13/16 in. or 5/8 in. spark plug socket (depending on plug type).

➡If possible, buy various length socket drive extensions. Universal-joint and wobble extensions can be extremely useful, but be careful when using them, as they can change the amount of torque applied to the socket.

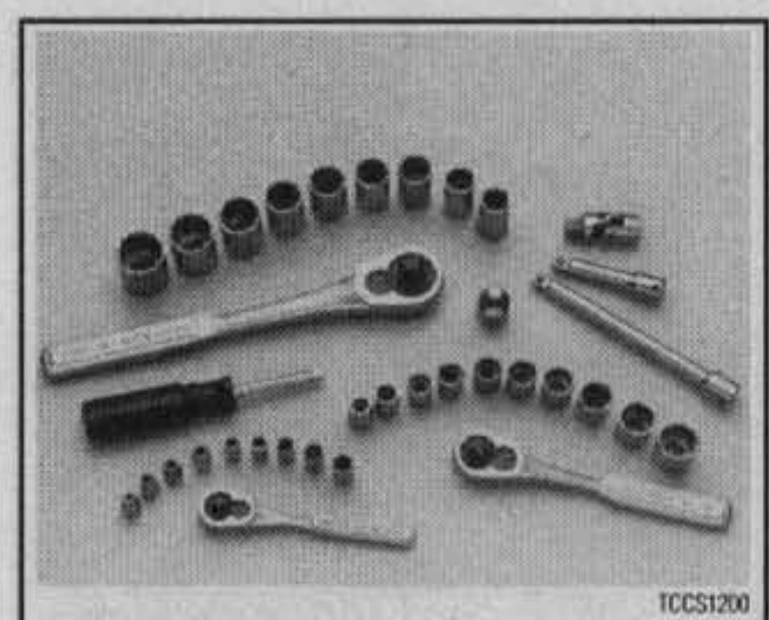
TCCS1200

Fig. 1 All but the most basic procedures will require an assortment of ratchets and sockets

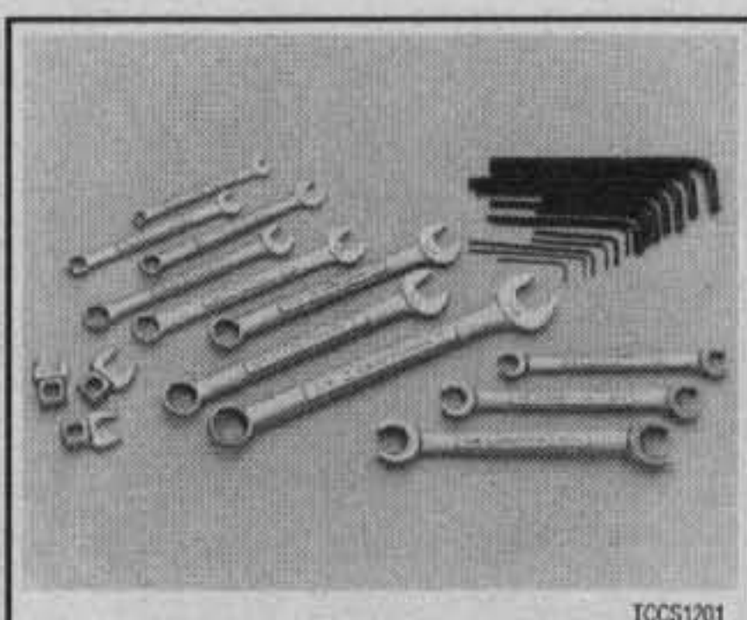
TCCS1201

Fig. 2 In addition to ratchets, a good set of wrenches and hex keys will be necessary

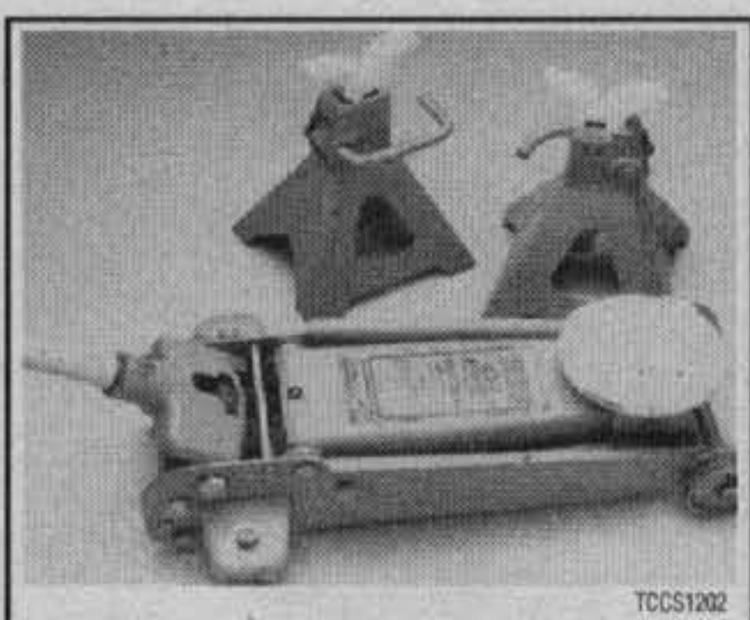
TCCS1202

Fig. 3 A hydraulic floor jack and a set of jackstands are essential for lifting and supporting the vehicle

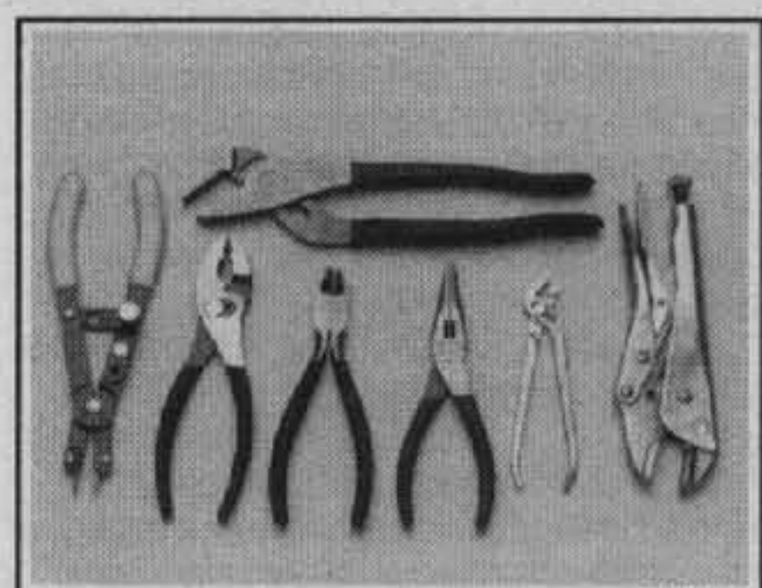
TCCS1203

Fig. 4 An assortment of pliers, grippers and cutters will be handy for old rusted parts and stripped bolt heads

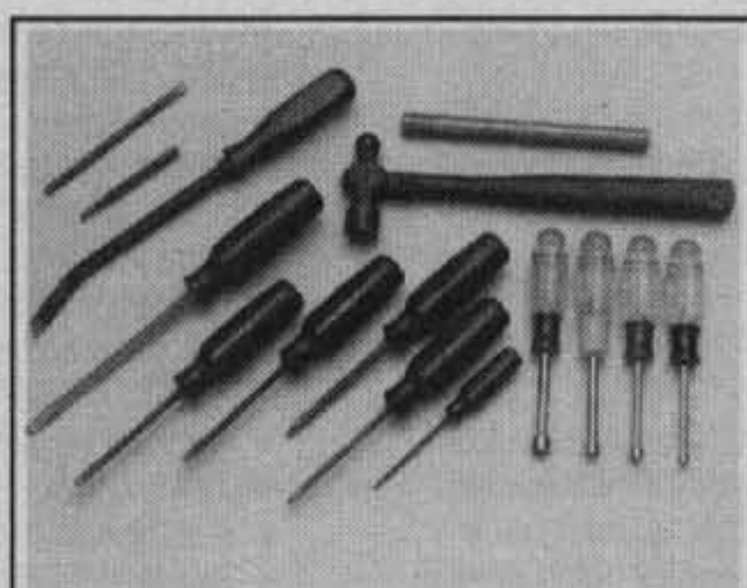
TCCS1204

Fig. 5 Various drivers, chisels and prybars are great tools to have in your toolbox

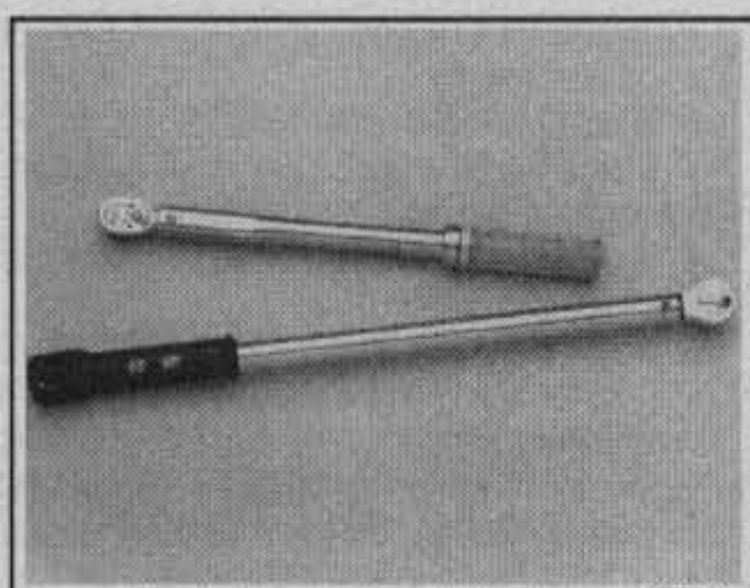
TCCS1205

Fig. 6 Many repairs will require the use of a torque wrench to assure the components are properly fastened

TCCS1209

Fig. 7 Although not always necessary, using specialized brake tools will save time

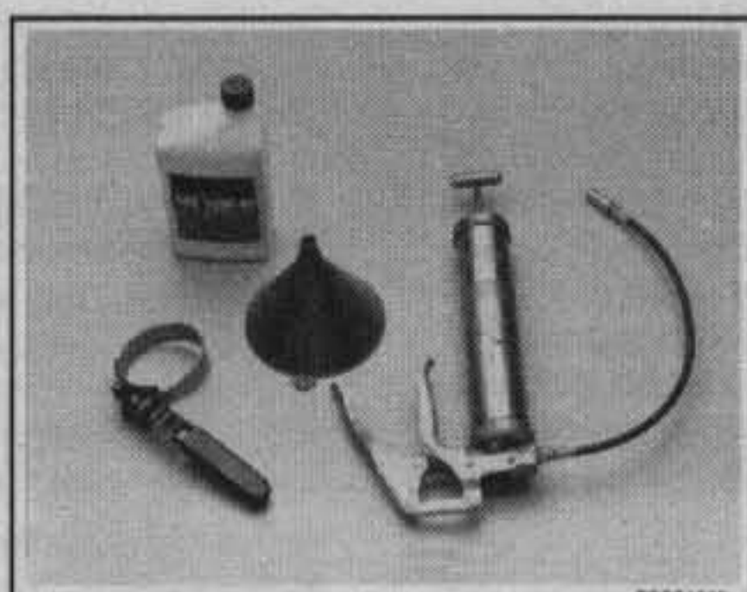
TCCS1210

Fig. 8 A few inexpensive lubrication tools will make maintenance easier

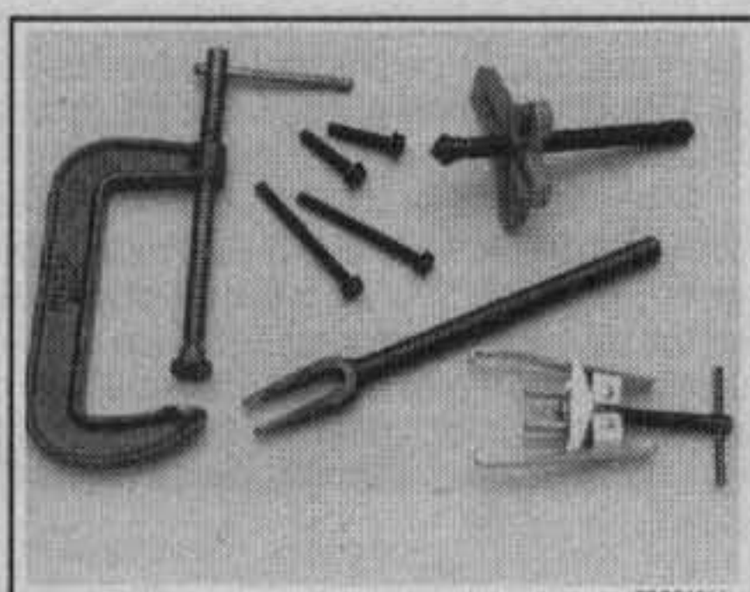
TCCS1211

Fig. 9 Various pullers, clamps and separator tools are needed for many larger, more complicated repairs

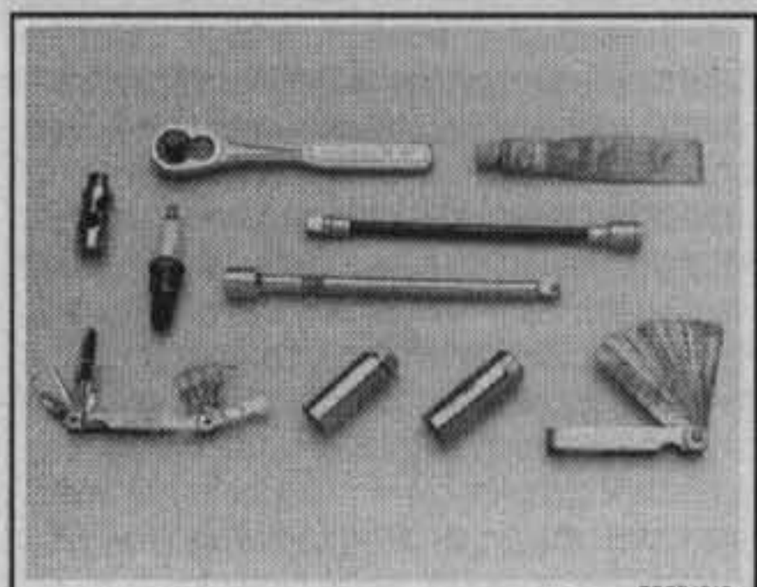
TCCS1212

Fig. 10 A variety of tools and gauges should be used for spark plug gapping and installation

TCCX1P01

Fig. 11 Inductive type timing light

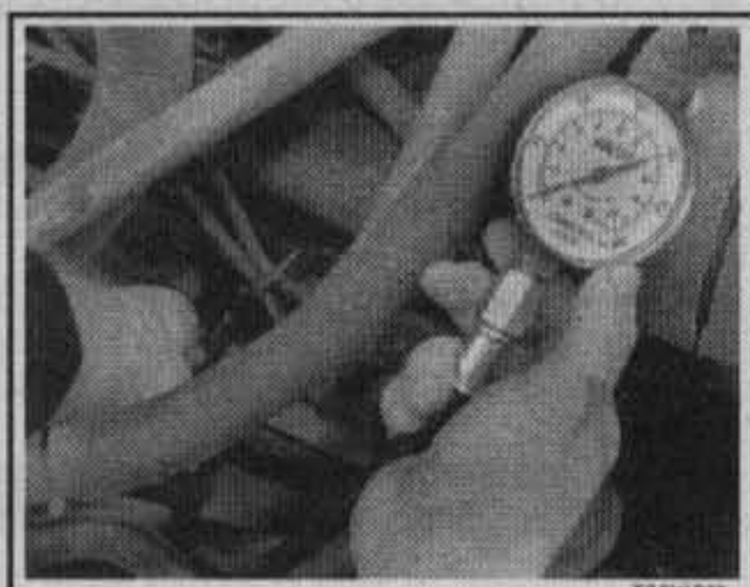
TCCX1P02

Fig. 12 A screw-in type compression gauge is recommended for compression testing

Fig. 13 A vacuum/pressure tester is necessary for many testing procedures

Fig. 14 Most modern automotive multimeters incorporate many helpful features

Fig. 15 Proper information is vital, so always have a Chilton Total Car Care manual handy

- Jackstands for support.
- Oil filter wrench.
- Spout or funnel for pouring fluids.
- Grease gun for chassis lubrication (unless your vehicle is not equipped with any grease fittings)
- Hydrometer for checking the battery (unless equipped with a sealed, maintenance-free battery).
- A container for draining oil and other fluids.
- Rags for wiping up the inevitable mess.

In addition to the above items there are several others that are not absolutely necessary, but handy to have around. These include an equivalent oil absorbent gravel, like cat litter, and the usual supply of lubricants, antifreeze and fluids. This is a basic list for routine maintenance, but only your personal needs and desire can accurately determine your list of tools.

After performing a few projects on the vehicle, you'll be amazed at the other tools and non-tools on your workbench. Some useful household items are: a large turkey baster or siphon, empty coffee cans and ice trays (to store parts), a ball of twine, electrical tape for wiring, small rolls of colored tape for tagging lines or hoses, markers and pens, a note pad, golf tees (for plugging vacuum lines), metal coat hangers or a roll of mechanic's wire (to hold things out of the way), dental pick or similar long, pointed probe, a strong magnet, and a small mirror (to see into recesses and under manifolds).

A more advanced set of tools, suitable for tune-up work, can be drawn up easily. While the tools are slightly more sophisticated, they need not be outrageously expensive. There are several inexpensive tach/dwell meters on the market that are every bit as good for the average mechanic as a professional model. Just be sure that it goes to a least 1200–1500 rpm on the tach scale and that it works on 4, 6 and 8-cylinder engines. The key to these purchases is to make them with an eye towards adaptability and wide range. A basic list of tune-up tools could include:

- Tach/dwell meter.
- Spark plug wrench and gapping tool.
- Feeler gauges for valve adjustment.
- Timing light.

The choice of a timing light should be made carefully. A light which works on the DC current supplied by the vehicle's battery is the best choice; it should have a xenon tube for brightness. On any vehicle with an electronic ignition system, a timing light with an inductive pickup that clamps around the No. 1 spark plug cable is preferred.

In addition to these basic tools, there are several other tools and gauges you may find useful. These include:

- Compression gauge. The screw-in type is slower to use, but eliminates the possibility of a faulty reading due to escaping pressure.
- Manifold vacuum gauge.
- 12V test light.
- A combination volt/ohmmeter
- Induction Ammeter. This is used for determining whether or not there is current in a wire. These are handy for use if a wire is broken somewhere in a wiring harness.

As a final note, you will probably find a torque wrench necessary for all but the most basic work. The beam type models are perfectly adequate, although the newer click types (breakaway) are easier to use. The click type torque wrenches tend to be more expensive. Also keep in mind that all types of torque wrenches should be periodically checked and/or recalibrated. You will have to decide for yourself which better fits your pocketbook, and purpose.

Special Tools

Normally, the use of special factory tools is avoided for repair procedures, since these are not readily available for the do-it-yourself mechanic. When it is possible to perform the job with more commonly available tools, it will be pointed out, but occasionally, a special tool was designed to perform a specific function and should be used. Before substituting another tool, you should be convinced that neither your safety nor the performance of the vehicle will be compromised.

Special tools can usually be purchased from an automotive parts store or from your dealer. In some cases special tools may be available directly from the tool manufacturer.

SERVICING YOUR VEHICLE SAFELY

See Figures 16, 17 and 18

It is virtually impossible to anticipate all of the hazards involved with automotive maintenance and service, but care and common sense will prevent most accidents.

The rules of safety for mechanics range from "don't smoke around gasoline," to "use the proper tool(s) for the job." The trick to avoiding injuries is to develop safe work habits and to take every possible precaution.

Do's

- Do keep a fire extinguisher and first aid kit handy.
- Do wear safety glasses or goggles when cutting, drilling, grinding or prying, even if you have 20–20 vision. If you wear glasses for the sake of vision, wear safety goggles over your regular glasses.
- Do shield your eyes whenever you work around the battery. Batteries contain sulfuric acid. In case of contact with, flush the area with water or a mixture of water and baking soda, then seek immediate medical attention.
- Do use safety stands (jackstands) for any undervehicle service. Jacks are for raising vehicles; jackstands are for making sure the vehicle stays raised until you want it to come down.
- Do use adequate ventilation when working with any chemicals or hazardous materials. Like carbon monoxide, the asbestos dust resulting from some brake lining wear can be hazardous in sufficient quantities.
- Do disconnect the negative battery cable when working on the electrical system. The secondary ignition system contains EXTREMELY HIGH VOLTAGE. In some cases it can even exceed 50,000 volts.
- Do follow manufacturer's directions whenever working with potentially hazardous materials. Most chemicals and fluids are poisonous.
- Do properly maintain your tools. Loose hammerheads, mushroomed

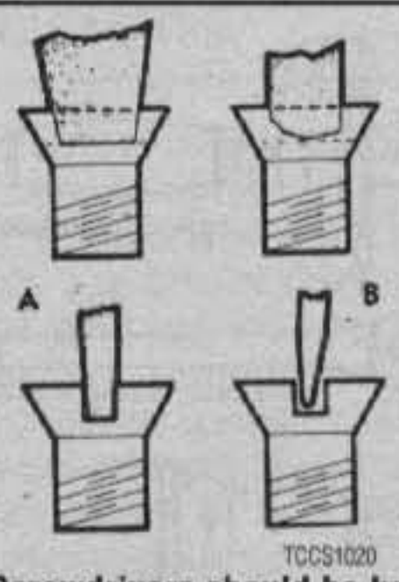

Fig. 16 Screwdrivers should be kept in good condition to prevent injury or damage which could result if the blade slips from the screw

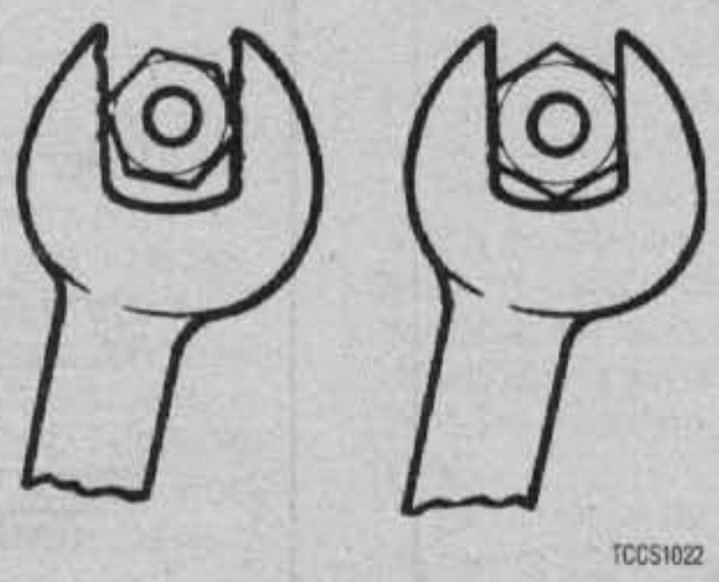

Fig. 17 Using the correct size wrench will help prevent the possibility of rounding off a nut

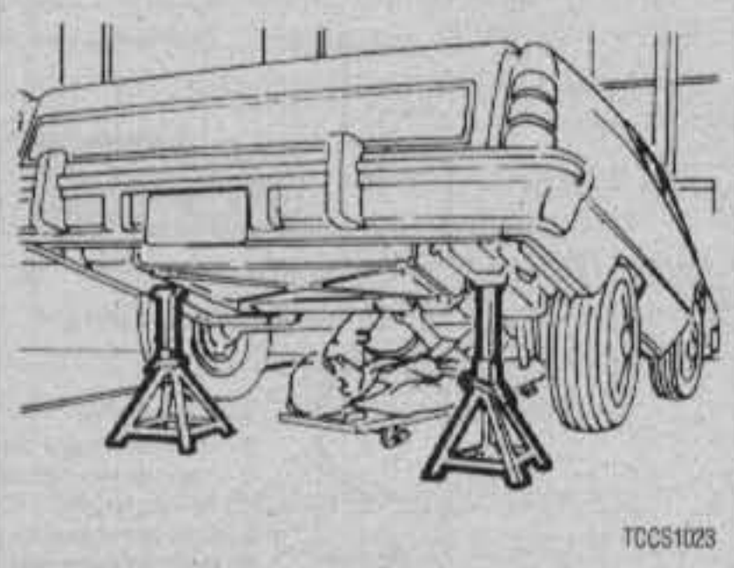

Fig. 18 NEVER work under a vehicle unless it is supported using safety stands (jackstands)

punches and chisels, frayed or poorly grounded electrical cords, excessively worn screwdrivers, spread wrenches (open end), cracked sockets, slipping ratchets, or faulty droplight sockets can cause accidents.

- Likewise, keep your tools clean; a greasy wrench can slip off a bolt head, ruining the bolt and often harming your knuckles in the process.
- Do use the proper size and type of tool for the job at hand. Do select a wrench or socket that fits the nut or bolt. The wrench or socket should sit straight, not cocked.
- Do, when possible, pull on a wrench handle rather than push on it, and adjust your stance to prevent a fall.
- Do be sure that adjustable wrenches are tightly closed on the nut or bolt and pulled so that the force is on the side of the fixed jaw.
- Do strike squarely with a hammer; avoid glancing blows.
- Do set the parking brake and block the drive wheels if the work requires a running engine.

Don'ts

- Don't run the engine in a garage or anywhere else without proper ventilation—EVER! Carbon monoxide is poisonous; it takes a long time to leave the human body and you can build up a deadly supply of it in your system by simply breathing in a little at a time. You may not realize you are slowly poisoning yourself. Always use power vents, windows, fans and/or open the garage door.
- Don't work around moving parts while wearing loose clothing. Short sleeves are much safer than long, loose sleeves. Hard-toed shoes with neoprene soles protect your toes and give a better grip on slippery surfaces. Watches and jewelry is not safe working around a vehicle. Long hair should be tied back under a hat or cap.
- Don't use pockets for toolboxes. A fall or bump can drive a screwdriver deep into your body. Even a rag hanging from your back pocket can wrap around a spinning shaft or fan.
- Don't smoke when working around gasoline, cleaning solvent or other flammable material.
- Don't smoke when working around the battery. When the battery is being charged, it gives off explosive hydrogen gas.
- Don't use gasoline to wash your hands; there are excellent soaps available. Gasoline contains dangerous additives which can enter the body through a cut or through your pores. Gasoline also removes all the natural oils from the skin so that bone dry hands will suck up oil and grease.
- Don't service the air conditioning system unless you are equipped with the necessary tools and training. When liquid or compressed gas refrigerant is released to atmospheric pressure it will absorb heat from whatever it contacts. This will chill or freeze anything it touches.
- Don't use screwdrivers for anything other than driving screws! A screwdriver used as an prying tool can snap when you least expect it, causing injuries. At the very least, you'll ruin a good screwdriver.
- Don't use an emergency jack (that little ratchet, scissors, or pantograph jack supplied with the vehicle) for anything other than changing a flat! These jacks are only intended for emergency use out on the road; they are NOT designed as a maintenance tool. If you are serious about maintaining your vehicle yourself, invest in a hydraulic floor jack of at least a 1½ ton capacity, and at least two sturdy jackstands.

FASTENERS, MEASUREMENTS AND CONVERSIONS

Bolts, Nuts and Other Threaded Retainers

See Figures 19 and 20

Although there are a great variety of fasteners found in the modern car or truck, the most commonly used retainer is the threaded fastener (nuts, bolts, screws, studs, etc.). Most threaded retainers may be reused, provided that they are not damaged in use or during the repair. Some retainers (such as stretch bolts or torque prevailing nuts) are designed to deform when tightened or in use and should not be reinstalled.

Whenever possible, we will note any special retainers which should be replaced during a procedure. But you should always inspect the condition of a retainer when it is removed and replace any that show signs of damage. Check all threads for rust or corrosion which can increase the torque necessary to achieve the desired clamp load for which that fastener was originally selected. Additionally, be sure that the driver surface of the fastener has not been compromised by rounding or other damage. In some cases a driver surface may become only partially rounded, allowing the driver to catch in only one direction. In many of these occurrences, a fastener may be installed and tightened, but the driver would not be able to grip and loosen the fastener again.

If you must replace a fastener, whether due to design or damage, you must ALWAYS be sure to use the proper replacement. In all cases, a retainer of the same design, material and strength should be used. Markings on the heads of most bolts will help determine the proper strength of the fastener. The same material, thread and pitch must be selected to assure proper installation and safe operation of the vehicle afterwards.

Thread gauges are available to help measure a bolt or stud's thread. Most automotive and hardware stores keep gauges available to help you select the

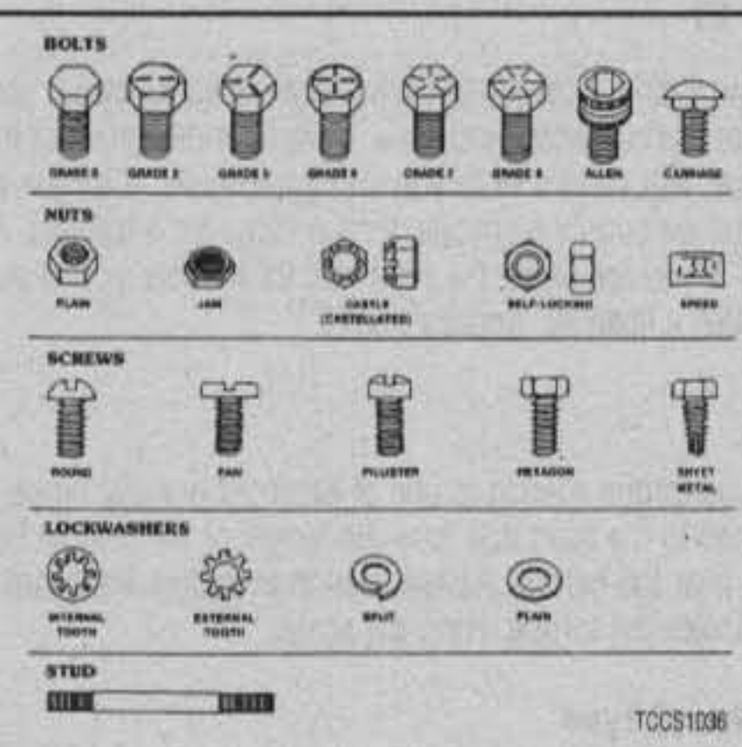

Fig. 19 There are many different types of threaded retainers found on vehicles

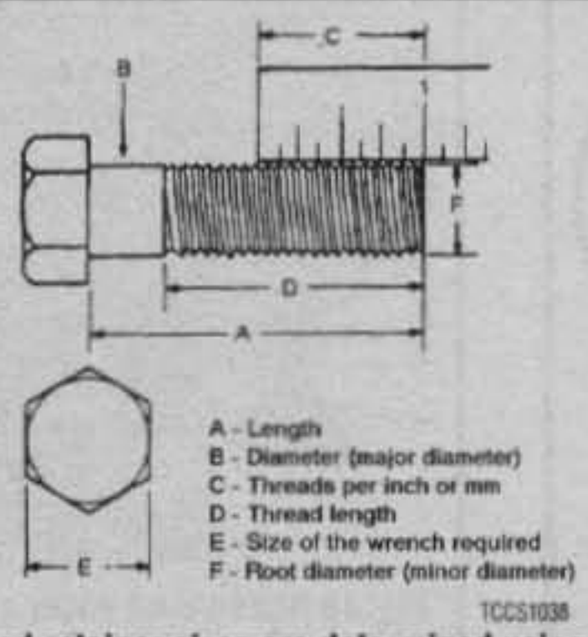

Fig. 20 Threaded retainer sizes are determined using these measurements

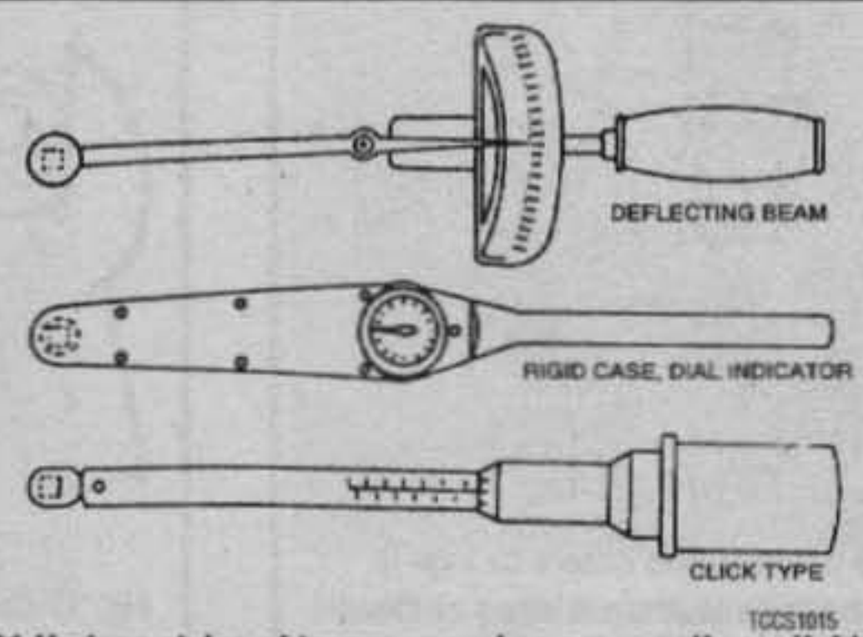

Fig. 21 Various styles of torque wrenches are usually available at your local automotive supply store

proper size. In a pinch, you can use another nut or bolt for a thread gauge. If the bolt you are replacing is not too badly damaged, you can select a match by finding another bolt which will thread in its place. If you find a nut which threads properly onto the damaged bolt, then use that nut to help select the replacement bolt.

WARNING

Be aware that when you find a bolt with damaged threads, you may also find the nut or drilled hole it was threaded into has also been damaged. If this is the case, you may have to drill and tap the hole, replace the nut or otherwise repair the threads. NEVER try to force a replacement bolt to fit into the damaged threads.

Torque

Torque is defined as the measurement of resistance to turning or rotating. It tends to twist a body about an axis of rotation. A common example of this would be tightening a threaded retainer such as a nut, bolt or screw. Measuring torque is one of the most common ways to help assure that a threaded retainer has been properly fastened.

When tightening a threaded fastener, torque is applied in three distinct areas, the head, the bearing surface and the clamp load. About 50 percent of the measured torque is used in overcoming bearing friction. This is the friction between the bearing surface of the bolt head, screw head or nut face and the base material or washer (the surface on which the fastener is rotating). Approximately 40 percent of the applied torque is used in overcoming thread friction. This leaves only about 10 percent of the applied torque to develop a useful clamp load (the force which holds a joint together). This means that friction can account for as much as 90 percent of the applied torque on a fastener.

TORQUE WRENCHES

See Figure 21

In most applications, a torque wrench can be used to assure proper installation of a fastener. Torque wrenches come in various designs and most automotive supply stores will carry a variety to suit your needs. A torque wrench should be used any time we supply a specific torque value for a fastener. Again, the general rule of "if you are using the right tool for the job, you should not have to strain to tighten a fastener" applies here.

Beam Type

The beam type torque wrench is one of the most popular types. It consists of a pointer attached to the head that runs the length of the flexible beam (shaft) to a scale located near the handle. As the wrench is pulled, the beam bends and the pointer indicates the torque using the scale.

Click (Breakaway) Type

Another popular design of torque wrench is the click type. To use the click type wrench you pre-adjust it to a torque setting. Once the torque is reached, the wrench has a reflex signaling feature that causes a momentary breakaway of the torque wrench body, sending an impulse to the operator's hand.

Pivot Head Type

See Figure 22

Some torque wrenches (usually of the click type) may be equipped with a pivot head which can allow it to be used in areas of limited access. BUT, it must be used properly. To hold a pivot head wrench, grasp the handle lightly, and as you pull on the handle, it should be floated on the pivot point. If the handle comes in contact with the yoke extension during the process of pulling, there is a very good chance the torque readings will be inaccurate because this could alter the wrench loading point. The design of the handle is usually such as to make it inconvenient to deliberately misuse the wrench.

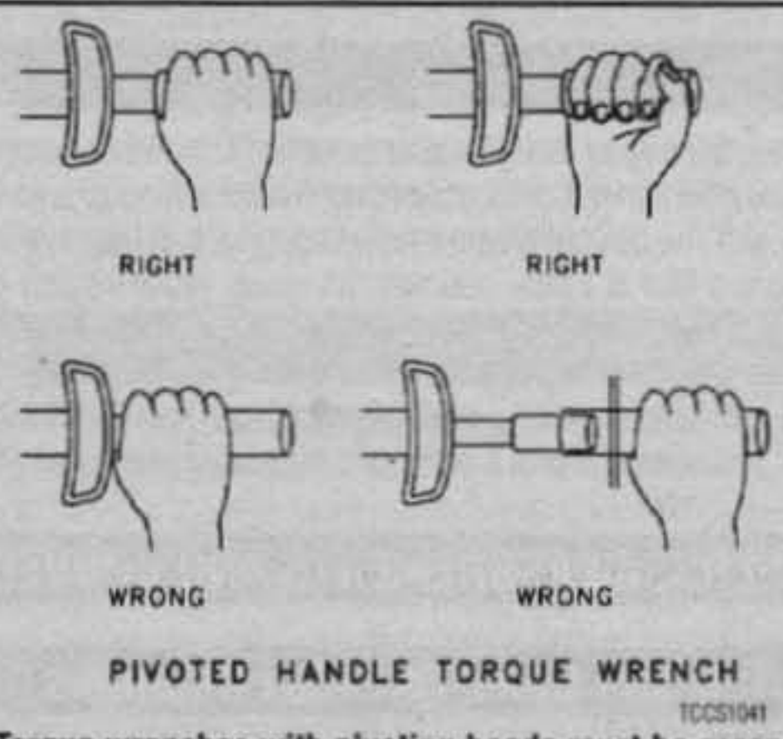

Fig. 22 Torque wrenches with pivoting heads must be grasped and used properly to prevent an incorrect reading

It should be mentioned that the use of any U-joint, wobble or extension will have an effect on the torque readings, no matter what type of wrench you are using. For the most accurate readings, install the socket directly on the wrench driver. If necessary, straight extensions (which hold a socket directly under the wrench driver) will have the least effect on the torque reading. Avoid any extension that alters the length of the wrench from the handle to the head/driving point (such as a crow's foot). U-joint or wobble extensions can greatly affect the readings; avoid their use at all times.

Rigid Case (Direct Reading)

A rigid case or direct reading torque wrench is equipped with a dial indicator to show torque values. One advantage of these wrenches is that they can be held at any position on the wrench without affecting accuracy. These wrenches are often preferred because they tend to be compact, easy to read and have a great degree of accuracy.

TORQUE ANGLE METERS

Because the frictional characteristics of each fastener or threaded hole will vary, clamp loads which are based strictly on torque will vary as well. In most applications, this variance is not significant enough to cause worry. But, in certain applications, a manufacturer's engineers may determine that more precise clamp loads are necessary (such is the case with many aluminum cylinder heads). In these cases, a torque angle method of installation would be specified. When installing fasteners which are torque angle tightened, a predetermined seating torque and standard torque wrench are usually used first to remove any compliance from the joint. The fastener is then tightened the specified additional portion of a turn measured in degrees. A torque angle gauge (mechanical protractor) is used for these applications.

Standard and Metric Measurements

See Figure 23

Throughout this manual, specifications are given to help you determine the condition of various components on your vehicle, or to assist you in their installation. Some of the most common measurements include length (in. or cm/mm), torque (ft. lbs., inch lbs. or Nm) and pressure (psi, in. Hg, kPa or mm Hg). In most cases, we strive to provide the proper measurement as determined by the manufacturer's engineers.

Though, in some cases, that value may not be conveniently measured with what is available in your toolbox. Luckily, many of the measuring devices which are available today will have two scales so the Standard or Metric measurements may easily be taken. If any of the various measuring tools which are available to you do not contain the same scale as listed in the specifications, use the accompanying conversion factors to determine the proper value.

The conversion factor chart is used by taking the given specification and multiplying it by the necessary conversion factor. For instance, looking at the first line, if you have a measurement in inches such as "free-play should be 2 in." but your ruler reads only in millimeters, multiply 2 in. by the conversion factor of 25.4 to get the metric equivalent of 50.8mm. Likewise, if the specification was given only in a Metric measurement, for example in Newton Meters (Nm), then look at the center column first. If the measurement is 100 Nm, multiply it by the conversion factor of 0.738 to get 73.8 ft. lbs.

CONVERSION FACTORS

LENGTH–DISTANCE				
Inches (in.)	x 25.4	= Millimeters (mm)	x .0394	= Inches
Feet (ft.)	x .305	= Meters (m)	x 3.281	= Feet
Miles	x 1.609	= Kilometers (km)	x .0621	= Miles
VOLUME				
Cubic Inches (in3)	x 16.387	= Cubic Centimeters	x .061	= in3
IMP Pints (IMP pt.)	x .568	= Liters (L)	x 1.76	= IMP pt.
IMP Quarts (IMP qt.)	x 1.137	= Liters (L)	x .88	= IMP qt.
IMP Gallons (IMP gal.)	x 4.546	= Liters (L)	x .22	= IMP gal.
IMP Quarts (IMP qt.)	x 1.201	= US Quarts (US qt.)	x .833	= IMP qt.
IMP Gallons (IMP gal.)	x 1.201	= US Gallons (US gal.)	x .833	= IMP gal.
Fl. Ounces	x 29.573	= Milliliters	x .034	= Ounces
US Pints (US pt.)	x .473	= Liters (L)	x 2.113	= Pints
US Quarts (US qt.)	x .946	= Liters (L)	x 1.057	= Quarts
US Gallons (US gal.)	x 3.785	= Liters (L)	x .264	= Gallons
MASS–WEIGHT				
Ounces (oz.)	x 28.35	= Grams (g)	x .035	= Ounces
Pounds (lb.)	x .454	= Kilograms (kg)	x 2.205	= Pounds
PRESSURE				
Pounds Per Sq. In. (psi)	x 6.895	= Kilopascals (kPa)	x .145	= psi
Inches of Mercury (Hg)	x .4912	= psi	x 2.036	= Hg
Inches of Mercury (Hg)	x 3.377	= Kilopascals (kPa)	x .2961	= Hg
Inches of Water (H_2O)	x .07355	= Inches of Mercury	x 13.783	= H_2O
Inches of Water (H_2O)	x .03613	= psi	x 27.684	= H_2O
Inches of Water (H_2O)	x .248	= Kilopascals (kPa)	x 4.026	= H_2O
TORQUE				
Pounds–Force Inches (in–lb)	x .113	= Newton Meters (N·m)	x 8.85	= in–lb
Pounds–Force Feet (ft–lb)	x 1.356	= Newton Meters (N·m)	x .738	= ft–lb
VELOCITY				
Miles Per Hour (MPH)	x 1.609	= Kilometers Per Hour (KPH)	x .621	= MPH
POWER				
Horsepower (Hp)	x .745	= Kilowatts	x 1.34	= Horsepower
FUEL CONSUMPTION*				
Miles Per Gallon IMP (MPG)	x .354	= Kilometers Per Liter (Km/L)		
Kilometers Per Liter (Km/L)	x 2.352	= IMP MPG		
Miles Per Gallon US (MPG)	x .425	= Kilometers Per Liter (Km/L)		
Kilometers Per Liter (Km/L)	x 2.352	= US MPG		

*It is common to covert from miles per gallon (mpg) to liters/100 kilometers (1/100 km), where mpg (IMP) x 1/100 km = 282 and mpg (US) x 1/100 km = 235.

TEMPERATURE	
Degree Fahrenheit (°F)	= (°C x 1.8) + 32
Degree Celsius (°C)	= (°F - 32) x .56

TCCS1044

Fig. 23 Standard and metric conversion factors chart

SERIAL NUMBER IDENTIFICATION

Vehicle

See Figure 24

A 17 digit alpha-numerical Vehicle Identification Number (VIN) is used. This number is stamped on a metal plate on the left side of the firewall.

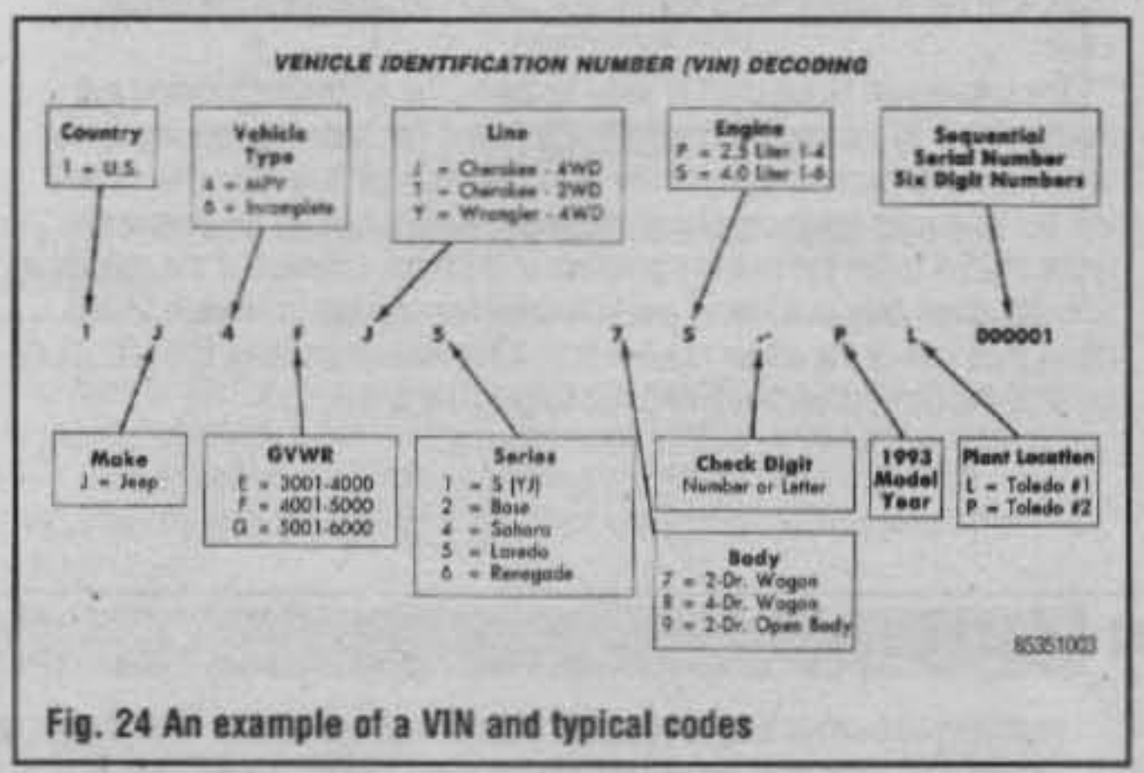

Fig. 24 An example of a VIN and typical codes

Engine

2.5L ENGINE

See Figure 25

The engine serial number for the American Motors-built 2.5 Liter engine is located on a machined pad at the rear right side of the block, between the No. 3 and No. 4 cylinders.

The digits of the code identify:

1. 1st digit—The year (3 = 1993).
2. 2nd and 3rd digits—The month (01–12).
3. 4th and 5th digits—The engine type/fuel system/compression ratio (HX = a 2.5 liter =[150 CID=] 9.1:1 compression ratio engine with a multi-point fuel injection system).
4. 6th and 7th digits—The day of engine build (01–31).

For example: Engine code 301HX23 identifies a 2.5 liter (150 CID) engine with a multi-port fuel injection system, 9.1:1 compression ratio and built on January 23, 1993.

Also on the block, just above the oil filter boss (near the distributor), is the oversized/undersized component code. The codes are explained as follows:

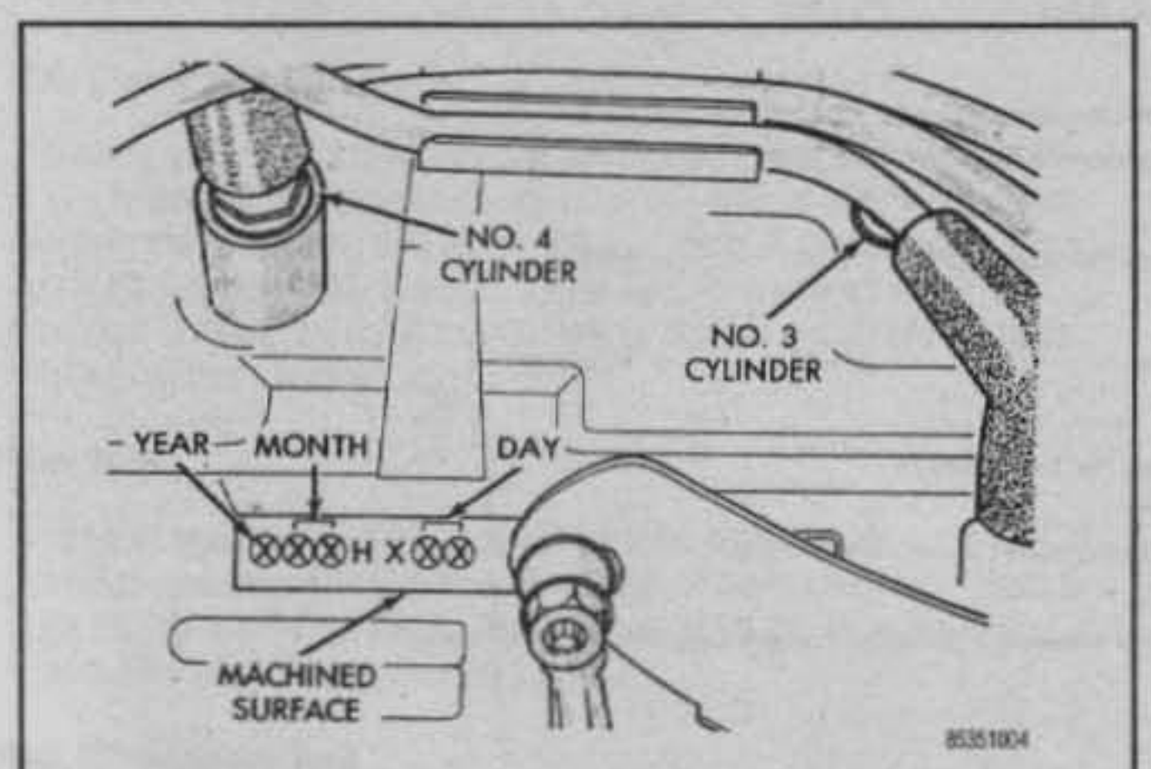

Fig. 25 Location of an engine identification number—2.5L engine

- Letter B: cylinder bores 0.010 in. (0.25mm) over
- Letter C: camshaft bearing bores 0.010 in. (0.25mm) over
- Letter M: main bearing journals 0.010 in. (0.25mm) under
- Letter P: connecting rod journals 0.010 in. (0.25mm) under
- Letter PM: main bearing journals and one or more connecting rod journals 0.010 in. (0.25mm) under

4.0L AND 4.2L ENGINES

See Figure 26

The engine code is found in the identification plate on the firewall. The second location is on a machined surface of the block between number 2 and 3 spark plugs. For further identification, the displacement is cast into the side of the block. The letter in the code identifies the engine by displacement (cu. in.), carburetor type and compression ratio.

All of the engines have the same undersize/oversize letter codes, located on the boss directly above the oil filter (near the distributor. The parts size code is as follows:

- Letter B indicates 0.010 in. (0.25mm) oversized cylinder bore.
- Letter M indicates 0.010 in. (0.25mm) undersized main bearings.
- Letter P indicates 0.010 in. (0.25mm) undersized connecting rod bearings.
- Letter C indicates 0.010 in. (0.25mm) oversized camshaft block bores.

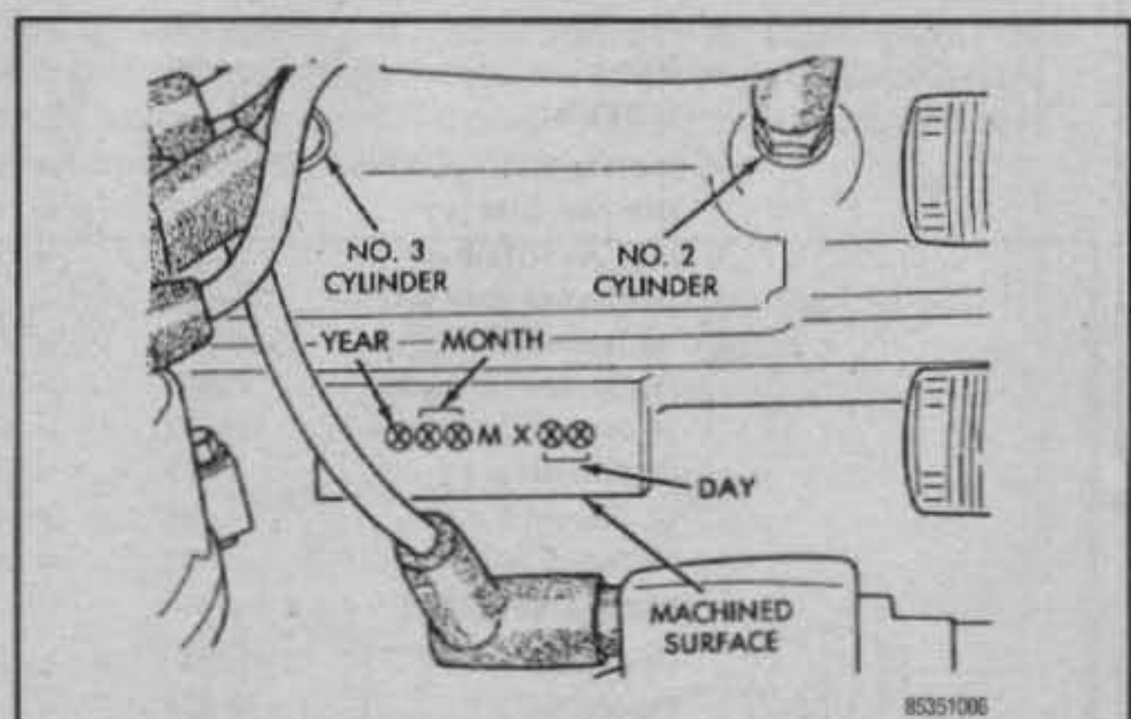

Fig. 26 Location of an engine identification number—4.0L and 4.2L engines

Transmission/Transfer Case/Axle

There is a tag attached to the housing that identifies the manufacturer and model. It is necessary to have the information on this tag before ordering parts. When reassembling the unit, be sure that this tag is replaced on the case so identification can be made in the future.

In some cases, the transmission identification number may be embossed on the transmission housing.

The following manual transmissions can be found on Wranglers:

- BA10/5—1987–89 4.2L
- Aisin AX4—1990–95 2.5L
- Aisin AX5—1987–95 2.5L
- Aisin AX15—1990–95 4.0L and 4.2L

The following automatic transmissions can be found on Wranglers:

- Chrysler 999—1987–91
- Chrysler 32RH—1992–95
- Chrysler 30RH—1994–95

Wranglers use a NP-207 transfer case for the 1987 model year and the NP-231 for 1988–95 models.

The front axle is a Dana 30 while the rear is a Dana 35.

ENGINE IDENTIFICATION

Year	Model	Engine Displacement Liters (cc)	Engine Series (ID/VIN)	Fuel System	No. of Cylinders	Engine Type
1987	Wrangler	2.5 (2458)	H	TBI	4	OHV
		4.2 (4228)	C	2 bbl	6	OHV
1988	Wrangler	2.5 (2458)	H	TBI	4	OHV
		4.2 (4228)	C	2 bbl	6	OHV
1989	Wrangler	2.5 (2458)	E	TBI	4	OHV
		4.2 (4228)	M	2 bbl	6	OHV
1990	Wrangler	2.5 (2458)	E	TBI	4	OHV
		4.2 (4228)	T	2 bbl	6	OHV
1991	Wrangler	2.5 (2458)	P	MFI	4	OHV
		4.0 (3966)	S	MFI	6	OHV
1992	Wrangler	2.5 (2458)	P	MFI	4	OHV
		4.0 (3966)	S	MFI	6	OHV
1993	Wrangler	2.5 (2458)	P	MFI	4	OHV
		4.0 (3966)	S	MFI	6	OHV
1994-95	Wrangler	2.5 (2458)	P	MFI	4	OHV
		4.0 (3966)	S	MFI	6	OHV

85351C01

ROUTINE MAINTENANCE

Proper maintenance and tune-up is the key to long and trouble-free vehicle life. Studies have shown that a properly tuned and maintained vehicle can achieve better gas mileage than an out-of-tune vehicle. As a conscientious owner and driver, set aside a Saturday morning, say once a month, to check or replace items which could cause major problems later. Keep your own personal log to jot down which services you performed, how much the parts cost you, the date, and the exact odometer reading at the time. Keep all receipts for such items as engine oil and filters, so that they may be referred to in case of related problems or to determine operating expenses. As a do-it-yourselfer, these receipts are the only proof you have that the required maintenance was performed. In the event of a warranty problem, these receipts will be invaluable.

The literature provided with your vehicle when it was originally delivered includes the factory recommended maintenance schedule. If you no longer have this literature, replacement copies are usually available from the dealer.

Air Cleaner

REMOVAL & INSTALLATION

See Figures 27, 28, 29 and 30

Remove the wing nut, or unhook the retaining clips on top of the cover. On the 4.2L engine, detach the rubber hose from the engine rocker arm (valve) cover and set the cover aside, being careful not to damage the large diameter hose or hoses to the air cleaner inlet.

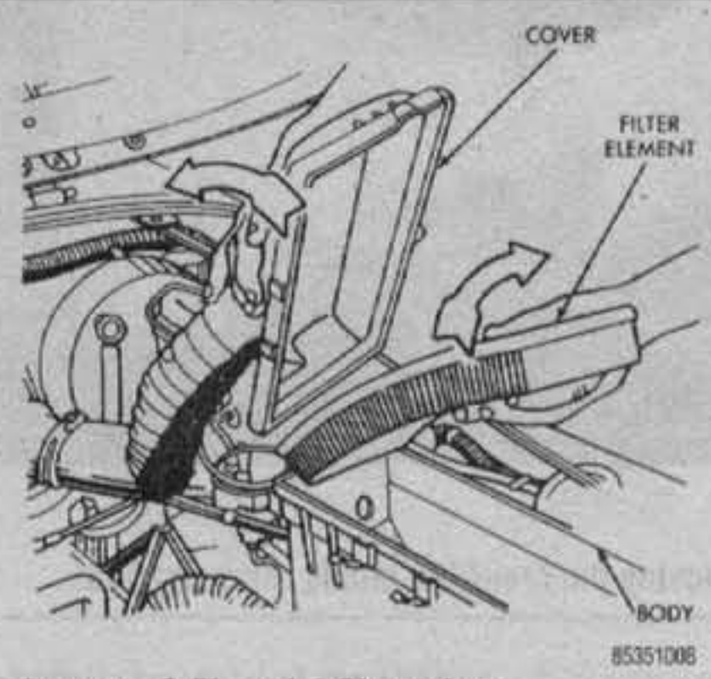

Fig. 27 Air cleaner—2.5L and 4.0L engines

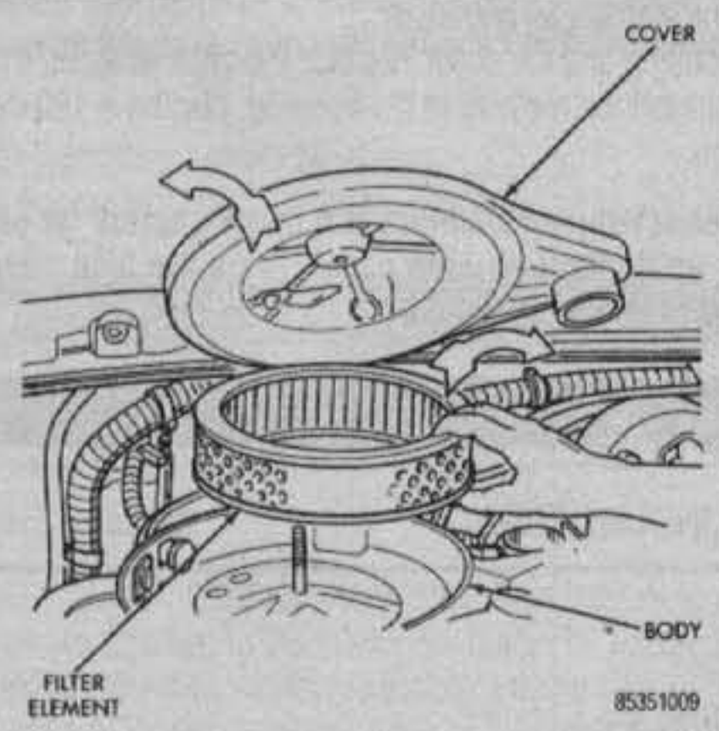

Fig. 28 Air cleaner—4.2L engines

Fig. 29 Unsnapping the clips on the air cleaner cover

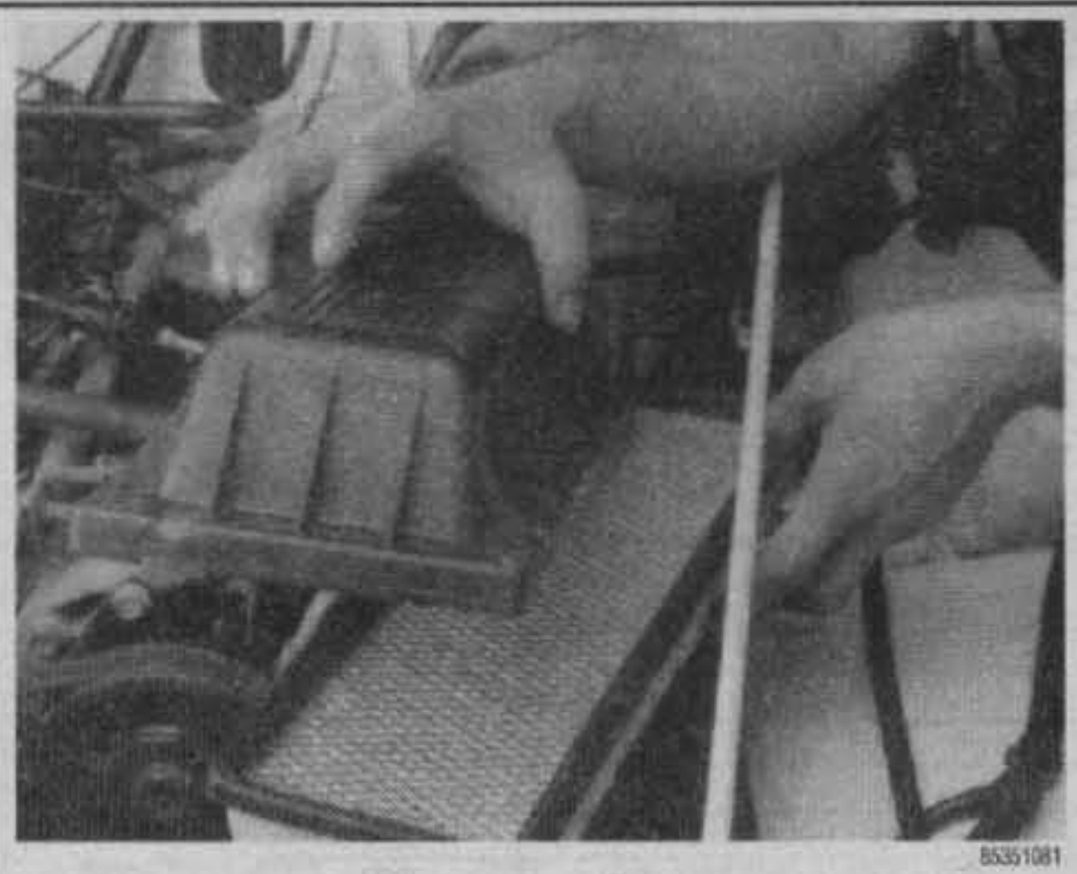

Fig. 30 Remove the air cleaner cover and lift out the filter

If the filter element has a foam wrapper, remove the wrapper and wash it in detergent or a safe solvent. Squeeze and blot dry. Wet the wrapper in engine oil and squeeze it tightly in an absorbent towel or rag to remove the excess.

Clean the dirt from the paper element by rapping it gently against a flat surface. Replace the element as necessary.

Clean the housing and the cover. Replace the oiled wrapper, if any, on the element and reinstall the element in the housing, placing it 180 degrees from its original position.

➡The oiled foam wrapper element is a factory option for some years. It should be available through Jeep parts. There are also aftermarket variations on this, both dry and oiled.

Fuel Filter

REMOVAL & INSTALLATION

2.5L Engine

1987–90 MODELS

See Figure 31

The filter is located behind a protective shield on the left frame rail, just in front of the shock absorber.

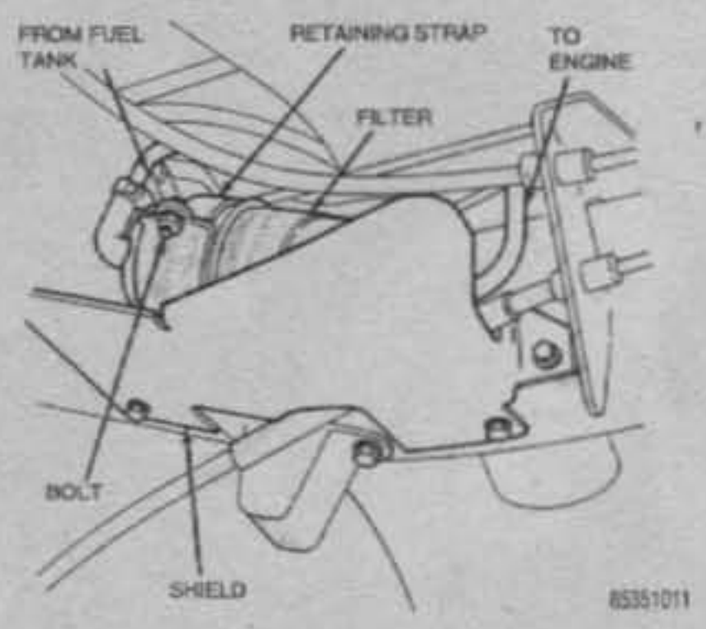

Fig. 31 Fuel filter and shield—all fuel injected models

CAUTION

Wear protective goggles to prevent fuel from spraying into your eyes. Have the new filter handy to install immediately.

1. Raise and safely support the rear end on jackstands.
2. Unfasten the protective shield bolts, then remove the shield.
3. Remove the filter retaining strap bolt.
4. Clamp shut the hose on the inlet side of the filter to prevent fuel from draining once the filter is removed.
5. Unfasten the hose clamps.
6. Remove the filter.
7. Installation is the reverse of removal.

1991–95 MODELS

See Figures 31, 32, 33, 34 and 35

Since the fuel filter is located along the frame rail, the vehicle will have to be raised slightly.

WARNING

Before servicing any components within the fuel system, the system pressure must first be released.

1. Release the fuel system pressure. Refer to the procedure outlined earlier in this section.
2. Raise the vehicle slightly and safely support it with jackstands.
3. Remove the fuel filter shield.
4. Remove the hoses and clamps on both ends of the fuel filter.
5. Wrap a shop towel or clean rag around the hoses to absorb fuel.
6. Remove the hoses from the filter, then discard the clamps and filter.
7. Remove the filter retaining strap bolt and remove the filter from the rail.

➡The ends of the filter are marked for correct installation. Install the filter with the end marked IN towards the fuel tank and the end marked OUT towards the engine.

To install:

8. Install the new filter between the hoses and position new clamps.
9. Tighten the clamps to 15 inch lbs. (1.7 Nm).
10. Position the filter assembly on the chassis rail.
11. Tighten the strap mounting bolt to 106 inch lbs. (12 Nm).
12. Install the fuel filter shield.
13. Lower the vehicle.

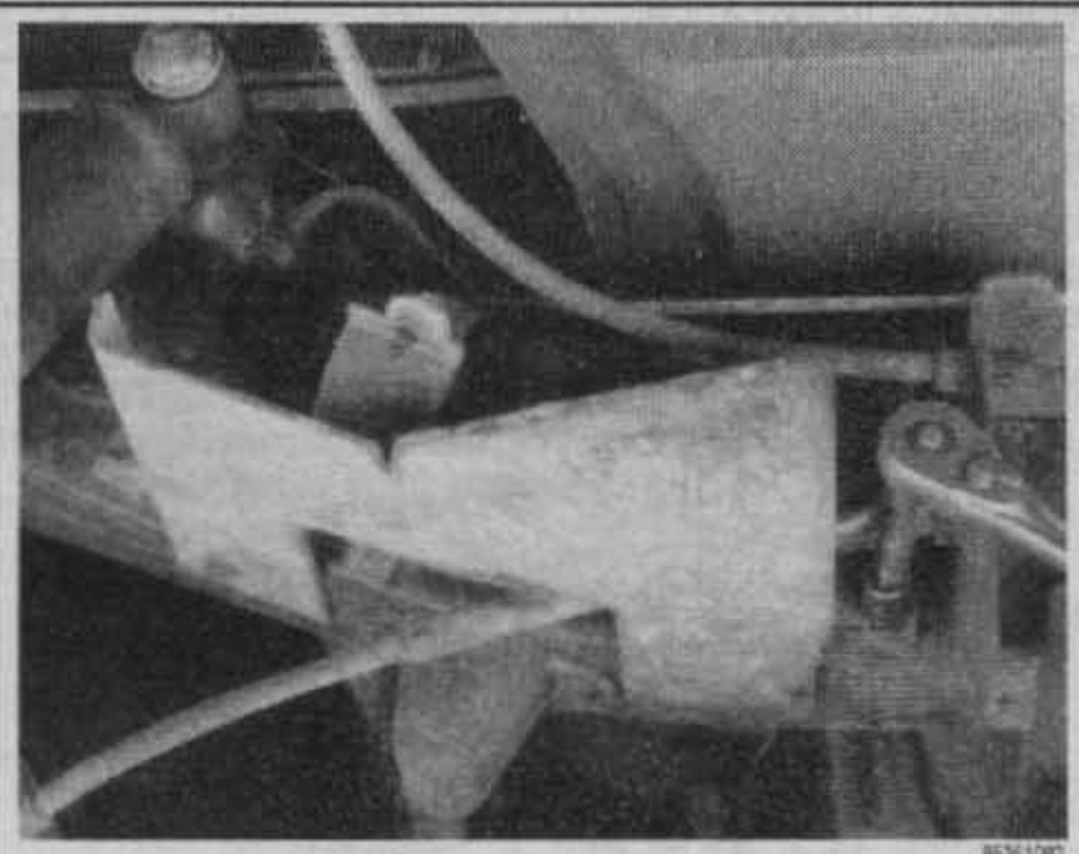

Fig. 32 Removing the fuel filter shield retaining bolts

Fig. 33 After unfastening the two fuel filter shield retaining bolts, remove the shield

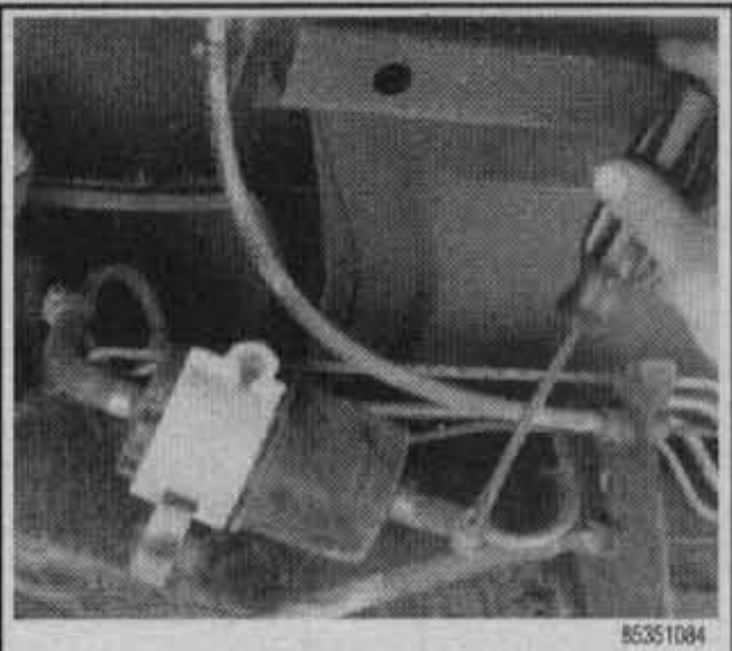

Fig. 34 Loosening the fuel filter hose clamps

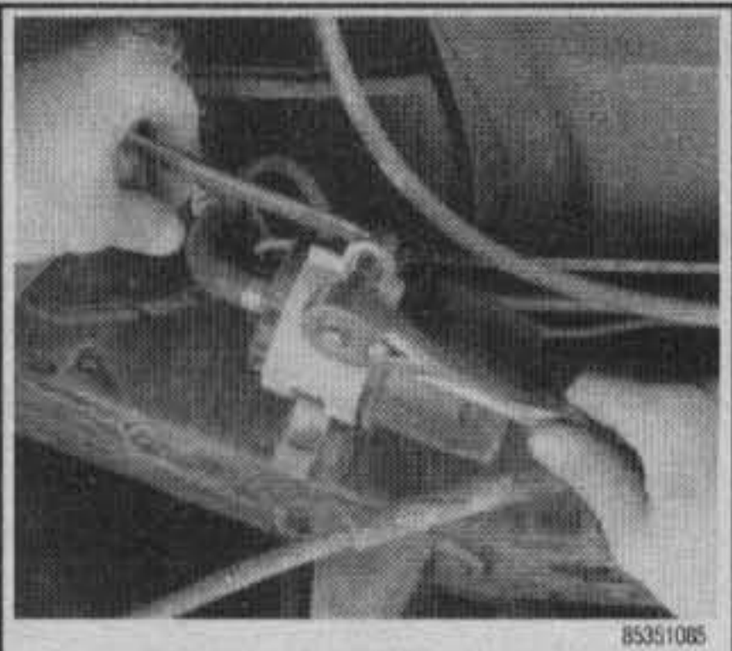

Fig. 35 Loosening the fuel filter retaining clamp

4.0L Engine

See Figure 31

Since the fuel filter is located along the frame rail, the vehicle will have to be raised slightly.

WARNING

Before servicing any components within the fuel system, the system pressure must first be released.

1. Release the fuel system pressure. Refer to the procedure outlined earlier in this section.
2. Raise the vehicle slightly and safely support it with jackstands.
3. Remove the fuel filter shield.
4. Remove the hoses and clamps on both ends of the fuel filter.
5. Wrap a shop towel or clean rag around the hoses to absorb fuel
6. Remove the hoses from the filter, and discard clamps and filter.
7. Unfasten the filter retaining strap bolt and remove the filter from the rail.

➡The ends of the filter are marked for correct installation. Install the filter with the end marked IN towards the fuel tank and the end marked OUT towards the engine.

To install:

8. Install the new filter between the hoses and clamp.
9. Tighten the clamps to 15 inch lbs. (1.7 Nm).
10. Position the filter assembly on the chassis rail.
11. Tighten the strap mounting bolt to 106 inch lbs. (12 Nm)
12. Install the fuel filter shield.
13. Lower the vehicle.

4.2L Engine

See Figure 36

This engine has a throwaway cartridge filter in the line between the fuel pump and the carburetor. To replace it:

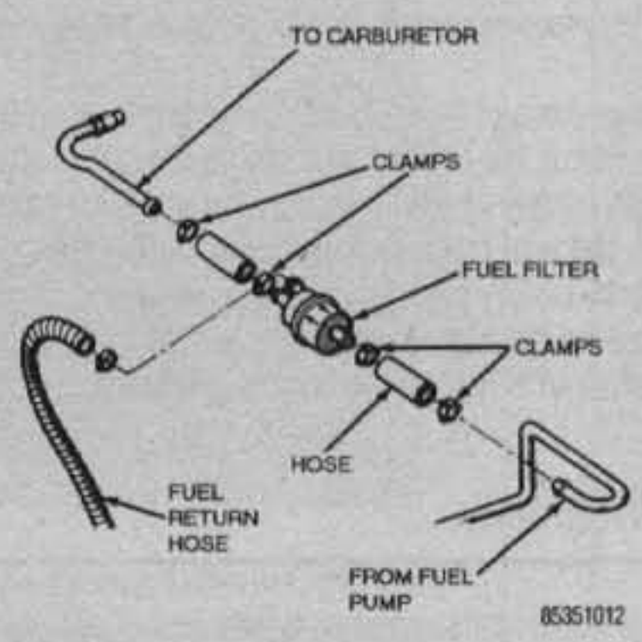

Fig. 36 Fuel filter removal and installation—4.2L engine

1. Remove the air cleaner as necessary.
2. Put an absorbent rag under the filter to catch spillage.
3. Remove the hose clamps.

➡If equipped with the original wire hose clamps, screw-type band clamps are recommended for replacement.

4. Remove the filter and short attaching hoses.
5. Remove the hoses if they are to be reused.
6. Assemble the new filter and hoses.

➡The fuel filter for this engine has two outlets. The additional one is to return fuel vapors and bubbles to the tank so as to prevent vapor lock. Be sure to position the tank line outlet above the line leading to the carburetor.

7. Install the filter, then tighten the clamps.
8. Start the engine and check for leaks. Discard the rag and old filter safely.

PCV Valve

OPERATION

See Figures 37 and 38

The PCV valve, used on 1987–90 models, controls the rate at which crankcase vapors are returned to the intake manifold. The action of the valve plunger is controlled by intake manifold vacuum and the spring. During deceleration and idle, when manifold vacuum is high, it overcomes the tension of the valve spring and the plunger bottoms in the manifold end of the valve housing. Because of the valve construction, it reduces, but does not stop, the passage of vapors to the intake manifold. When the engine is lightly accelerated or operated

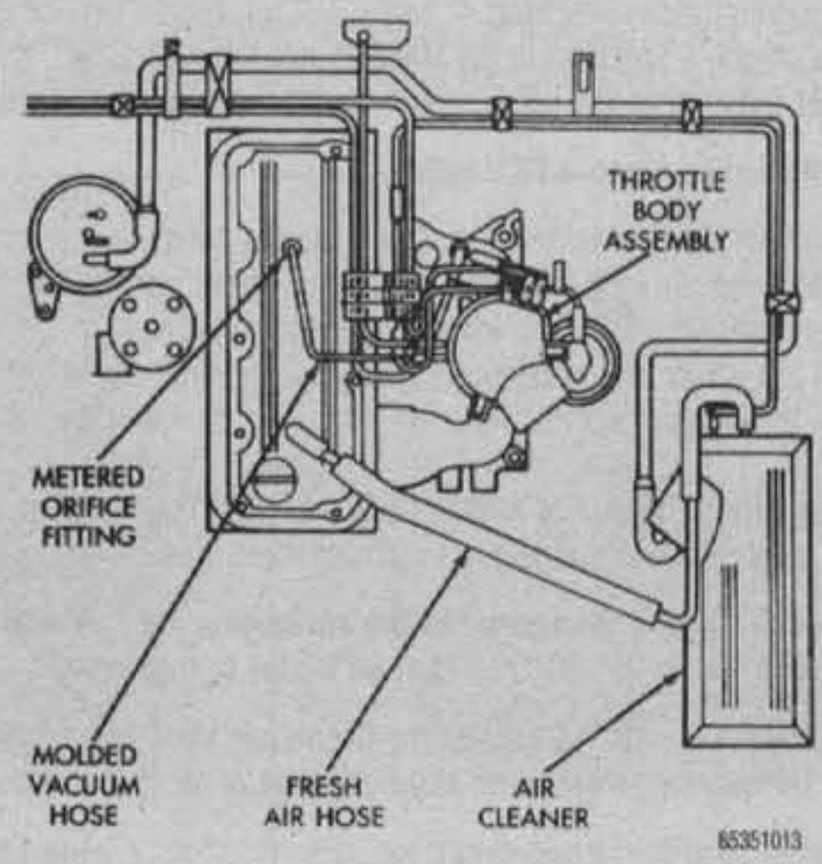

Fig. 37 Positive crankcase ventilation system—2.5L engine

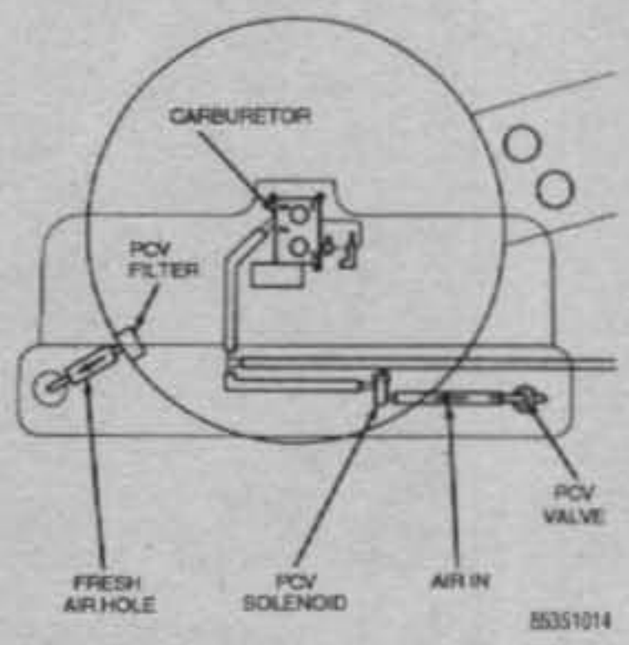

Fig. 38 Positive crankcase ventilation system—4.2L engine

at constant speed, spring tension matches intake manifold vacuum pull and the plunger takes a mid-position in the valve body, allowing more vapors to flow into the manifold.

The PCV valve, which is the heart of the positive crankcase ventilation system, should be free of dirt and residue and in working order. As long as the valve is kept clean and is not showing signs of damage or gumming up, it should work properly. When the valve cannot be cleaned sufficiently or becomes sticky and will not operate freely, it should be replaced.

The PCV system used on vehicles with a 4.2L engine, employs a PCV shut-off solenoid that is controlled by the engine computer. Air flow through the PCV valve is controlled by the PCV shut-off solenoid and manifold vacuum. The solenoid is located in the hose between the PCV valve where the hose connects to the intake manifold vacuum. When the PCV valve shut-off solenoid is not energized, crankcase ventilation is not restricted.

SERVICING

An inoperative PCV system will cause rough idling, sludge and oil dilution. In the event erratic idle, never attempt to compensate by disconnecting the PCV system. Disconnecting the PCV system will adversely affect engine ventilation. It could also shorten engine life through the buildup of sludge.

The PCV valve is in the the rocker arm cover. To inspect the PCV valve, proceed as follows:

1. With the engine idling, remove the PCV valve from the rocker cover. If the valve is not plugged, a hissing sound will be heard. A strong vacuum should be felt when you place your finger over the valve.
2. Reinstall the PCV valve and allow about a minute for pressure to drop.
3. Remove the crankcase intake air cleaner. Cover the opening in the rocker cover with a piece of stiff paper. The paper should be sucked against the opening with noticeable force.
4. With the engine stopped, remove the PCV valve and shake it. A rattle or clicking should be heard to indicate that the valve is free.
5. If the system passes the tests in Steps 1–4, no further service is required, unless replacement is specified in the Maintenance Intervals Chart. If the system does not pass these tests, the valve should be replaced with a new one.

➡Do not attempt to clean a PCV valve.

6. With a new PCV valve installed, if the paper is not sucked against the crankcase air intake opening (see Step 2), it will be necessary to clean the PCV valve hose and the passage in the lower part of the carburetor.
7. Clean the line with Combustion Chamber Conditioner or similar solvent. Do not leave the hoses in solvent for more than ½ hour. Allow the line to air dry.
8. Remove the carburetor or throttle body and HAND turn a ¼ in. drill through the passages to dislodge solid particles, then blow clean.

➡It is not necessary to disassemble the carburetor for this operation. If necessary, use a smaller drill, so that no metal is removed.

9. After checking and/or servicing the Crankcase Ventilation System, replace any components that do not allow passage of air to the intake manifold.

Crankcase Vent Filter

▸ See Figure 39

All 1987–90 4.2L engines that are equipped with a PCV system have a crankcase vent filter located inside the air cleaner. This element is used to filter the outside air before it enters the crankcase through the PCV system. Inspect the filter periodically along with the air cleaner element and replace as necessary.

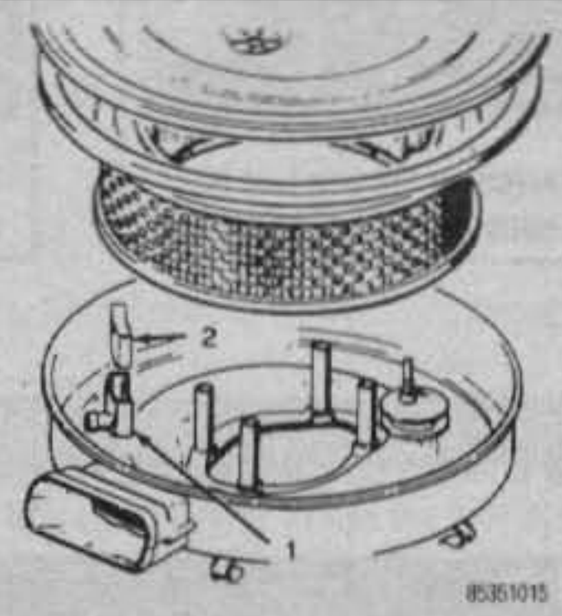

Fig. 39 Rotate the retainer (1) to remove the crankcase filter (2) from the air cleaner housing

Crankcase Ventilation (CCV) System

All 1991–95 Wranglers are equipped with a Crankcase Ventilation (CCV) system. The CCV system performs the same function as a conventional PCV system, but does not use a vacuum controlled valve. Please refer to Section 4 for a further description.

Evaporative Canister

All models have fuel evaporative emission control systems which include an evaporative storage canister. The purpose of this charcoal canister is to store gasoline vapors until they can be drawn into the engine and burned along with the air/fuel mixture. The air filter in the bottom of the canister should be replaced every 15,000 miles (24,155 km).

Battery

PRECAUTIONS

Always use caution when working on or near the battery. Never allow a tool to bridge the gap between the negative and positive battery terminals. Also, be careful not to allow a tool to provide a ground between the positive cable/terminal and any metal component on the vehicle. Either of these conditions will cause a short circuit, leading to sparks and possible personal injury.

Do not smoke or all open flames/sparks near a battery; the gases contained in the battery are very explosive and, if ignited, could cause severe injury or death.

All batteries, regardless of type, should be carefully secured by a battery hold-down device. If not, the terminals or casing may crack from stress during vehicle operation. A battery which is not secured may allow acid to leak, making it discharge faster. The acid can also eat away at components under the hood.

Always inspect the battery case for cracks, leakage and corrosion. A white corrosive substance on the battery case or on nearby components would indicate a leaking or cracked battery. If the battery is cracked, it should be replaced immediately.

GENERAL MAINTENANCE

Always keep the battery cables and terminals free of corrosion. Check and clean these components about once a year.

Keep the top of the battery clean, as a film of dirt can help discharge a battery that is not used for long periods. A solution of baking soda and water may be used for cleaning, but be careful to flush this off with clear water. DO NOT let any of the solution into the filler holes. Baking soda neutralizes battery acid and will de-activate a battery cell.

Batteries in vehicles which are not operated on a regular basis can fall victim to parasitic loads (small current drains which are constantly drawing current from the battery). Normal parasitic loads may drain a battery on a vehicle that is in storage and not used for 6–8 weeks. Vehicles that have additional accessories such as a phone or an alarm system may discharge a battery sooner. If the vehicle is to be stored for longer periods in a secure area and the alarm system is not necessary, the negative battery cable should be disconnected to protect the battery.

Remember that constantly deep cycling a battery (completely discharging and recharging it) will shorten battery life.

BATTERY FLUID

See Figure 40

Check the battery electrolyte level at least once a month, or more often in hot weather or during periods of extended vehicle operation. On non-sealed batteries, the level can be checked either through the case (if translucent) or by removing the cell caps. The electrolyte level in each cell should be kept filled to the split ring inside each cell, or the line marked on the outside of the case.

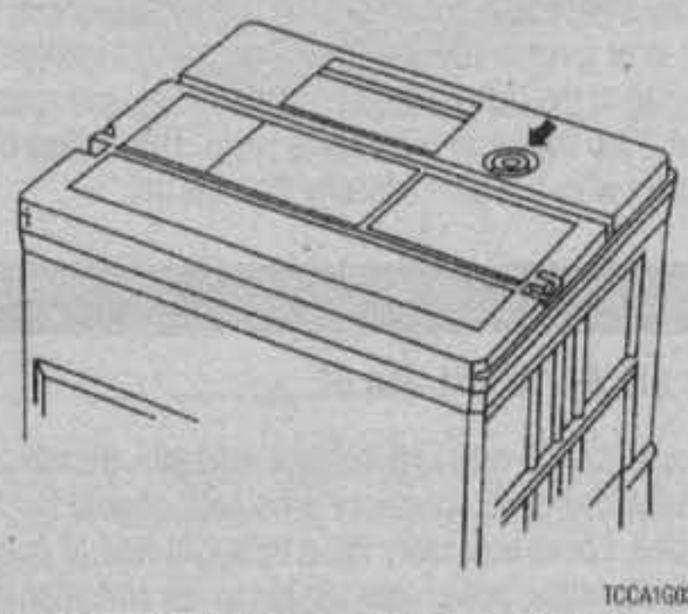

Fig. 40 Maintenance-free batteries usually contain a built-in hydrometer to check fluid level

If the level is low, add only distilled water through the opening until the level is correct. Each cell must be checked and filled individually. Distilled water should be used, because the chemicals and minerals found in most drinking water are harmful to the battery and could significantly shorten its life.

If water is added in freezing weather, the vehicle should be driven several miles to allow the water to mix with the electrolyte. Otherwise, the battery could freeze.

Although some maintenance-free batteries have removable cell caps, the electrolyte condition and level on all sealed maintenance-free batteries must be checked using the built-in hydrometer "eye." The exact type of eye will vary. But, most battery manufacturers, apply a sticker to the battery itself explaining the readings.

➡Although the readings from built-in hydrometers will vary, a green eye usually indicates a properly charged battery with sufficient fluid level. A dark eye is normally an indicator of a battery with sufficient fluid, but which is low in charge. A light or yellow eye usually indicates that electrolyte has dropped below the necessary level. In this last case, sealed batteries with an insufficient electrolyte must usually be discarded.

Checking the Specific Gravity

See Figures 41, 42 and 43

A hydrometer is required to check the specific gravity on all batteries that are not maintenance-free. On batteries that are maintenance-free, the specific gravity is checked by observing the built-in hydrometer "eye" on the top of the battery case.

CAUTION

Battery electrolyte contains sulfuric acid. If you should splash any on your skin or in your eyes, flush the affected area with plenty of clear water. If it lands in your eyes, get medical help immediately.

The fluid (sulfuric acid solution) contained in the battery cells will tell you many things about the condition of the battery. Because the cell plates must be kept submerged below the fluid level in order to operate, the fluid level is extremely important. And, because the specific gravity of the acid is an indication of electrical charge, testing the fluid can be an aid in determining if the battery must be replaced. A battery in a vehicle with a properly operating charging system should require little maintenance, but careful, periodic inspection should reveal problems before they leave you stranded.

At least once a year, check the specific gravity of the battery. It should be between 1.20 and 1.26 on the gravity scale. Most auto stores carry a variety of inexpensive battery hydrometers. These can be used on any non-sealed battery to test the specific gravity in each cell.

The battery testing hydrometer has a squeeze bulb at one end and a nozzle at the other. Battery electrolyte is sucked into the hydrometer until the float is lifted from its seat. The specific gravity is then read by noting the position of the float. If gravity is low in one or more cells, the battery should be slowly charged and checked again to see if the gravity has come up. Generally, if after charging, the specific gravity between any two cells varies more than 50 points (0.50), the battery should be replaced, as it can no longer produce sufficient voltage to guarantee proper operation.

CABLES

See Figures 44, 45, 46 and 47

Once a year (or as necessary), the battery terminals and the cable clamps should be cleaned. Loosen the clamps and remove the cables, negative cable first. On top post batteries, the use of a puller specially made for this purpose is

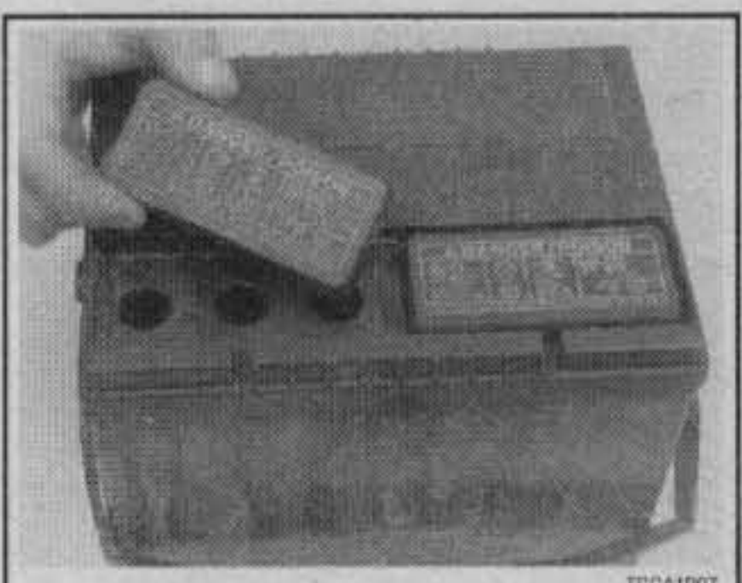

Fig. 41 On non-sealed batteries, the fluid level can be checked by removing the cell caps

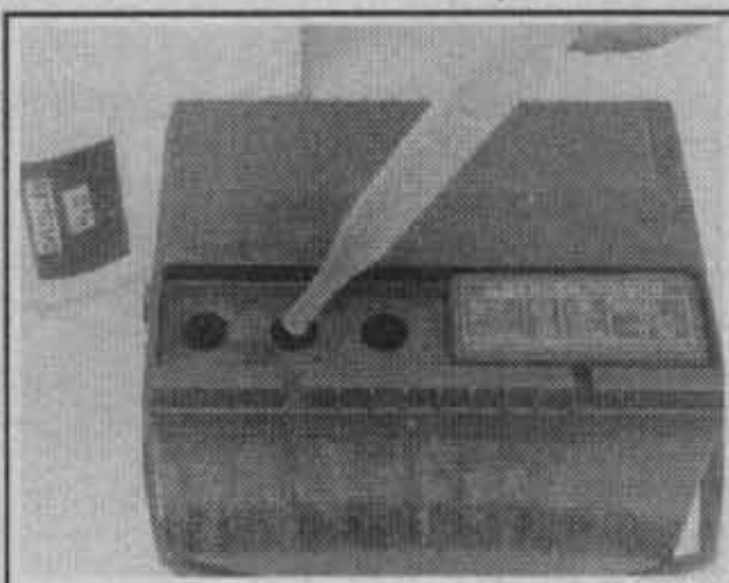

Fig. 42 If the fluid level is low, add only distilled water until the level is correct

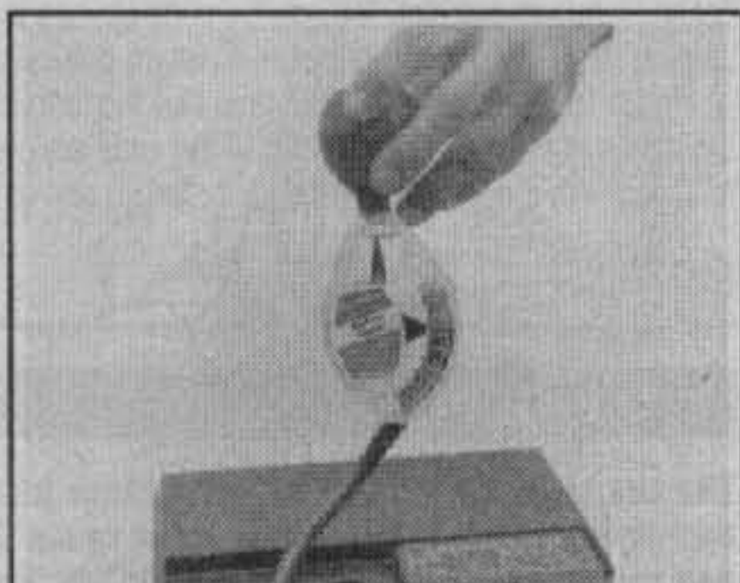

Fig. 43 Check the specific gravity of the battery's electrolyte with a hydrometer

TCCS1207

Fig. 44 The underside of this special battery tool has a wire brush to clean post terminals

TCCS1208

Fig. 45 Place the tool over the battery posts and twist to clean until the metal is shiny

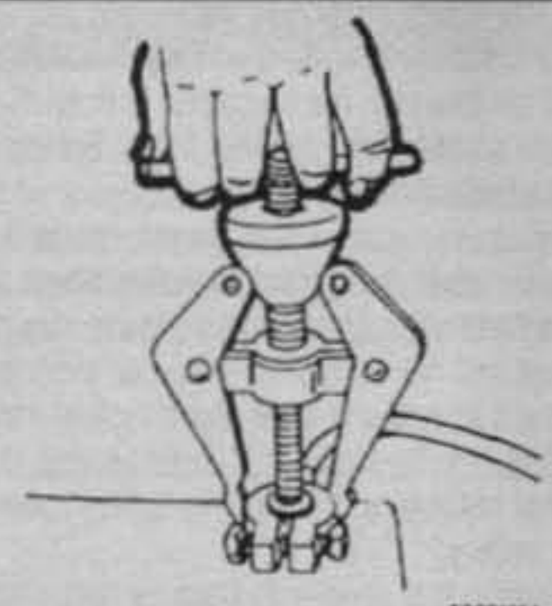

TCCS1254

Fig. 46 A special tool is available to pull the clamp from the post

TCCS1256

Fig. 47 The cable ends should be cleaned as well

recommended. These are inexpensive and available in most parts stores. Side terminal battery cables are secured with a small bolt.

Clean the cable clamps and the battery terminal with a wire brush, until all corrosion, grease, etc., is removed and the metal is shiny. It is especially important to clean the inside of the clamp thoroughly (an old knife is useful here), since a small deposit of oxidation there will prevent a sound connection and inhibit starting or charging. Special tools are available for cleaning these parts, one type for conventional top post batteries and another type for side terminal batteries. It is also a good idea to apply some dielectric grease to the terminal, as this will aid in the prevention of corrosion.

After the clamps and terminals are clean, reinstall the cables, negative cable last; DO NOT hammer the clamps onto battery posts. Tighten the clamps securely, but do not distort them. Give the clamps and terminals a thin external coating of grease after installation, to retard corrosion.

Check the cables at the same time that the terminals are cleaned. If the cable insulation is cracked or broken, or if the ends are frayed, the cable should be replaced with a new cable of the same length and gauge.

CHARGING

CAUTION

The chemical reaction which takes place in all batteries generates explosive hydrogen gas. A spark can cause the battery to explode and splash acid. To avoid personal injury, be sure there is proper ventilation and take appropriate fire safety precautions when working with or near a battery.

A battery should be charged at a slow rate to keep the plates inside from getting too hot. However, if some maintenance-free batteries are allowed to discharge until they are almost "dead," they may have to be charged at a high rate to bring them back to "life." Always follow the charger manufacturer's instructions on charging the battery.

REPLACEMENT

When it becomes necessary to replace the battery, select one with an amperage rating equal to or greater than the battery originally installed. Deterioration and just plain aging of the battery cables, starter motor, and associated wires makes the battery's job harder in successive years. This makes it prudent to install a new battery with a greater capacity than the old.

Belts

See Figures 48, 49, 50, 51 and 52

Once a year or at 12,000 mile (19,324 km) intervals, the tension and condition of the alternator and other accessory drive belts should be checked and, if necessary, adjusted. Loose accessory drive belts can lead to poor engine cooling and diminish alternator, power steering pump, air conditioning compressor or air pump output. A belt that is too tight places a severe strain on the water pump, alternator, power steering pump, compressor or air pump bearings.

Replace any belt that is so glazed, worn or stretched that it cannot be tightened sufficiently.

The material used in late model drive belts is such that the belts do not show wear. Replace belts at least every three years.

On vehicles with matched belts, replace both belts. New ½ in. (13mm), ⅜ in. (9.5mm) and 15/32 in. (12mm) wide belts are to be adjusted to a tension of 140 lbs.; ¼ in. (6mm) wide belts are adjusted to 80 lbs., measured on a belt tension gauge. Any belt that has been operating for a minimum of 10 minutes is considered a used belt. In the first 10 minutes, the belt should stretch to its maximum extent. After 10 minutes, stop the engine and recheck the belt tension.

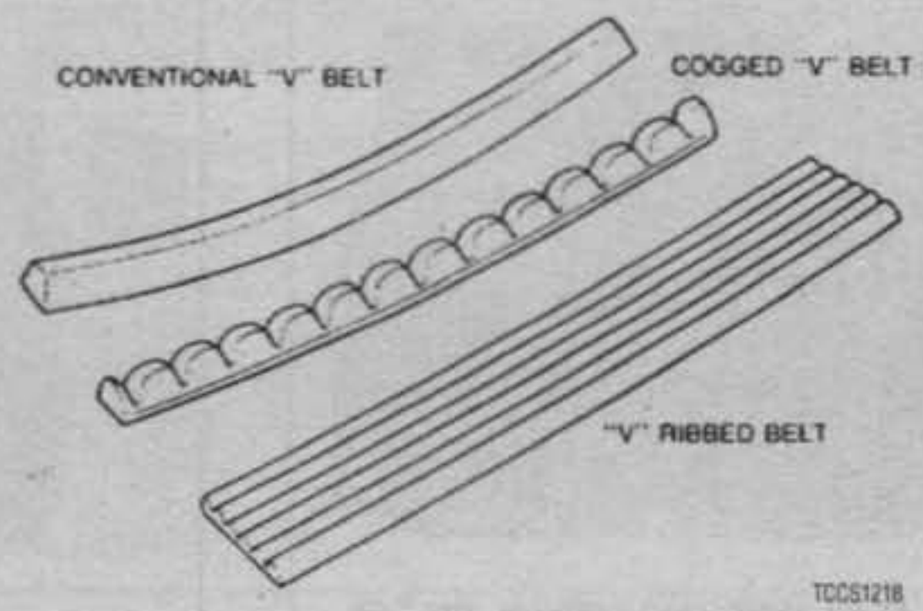

TCCS1218

Fig. 48 There are typically 3 types of accessory drive belts found on vehicles today

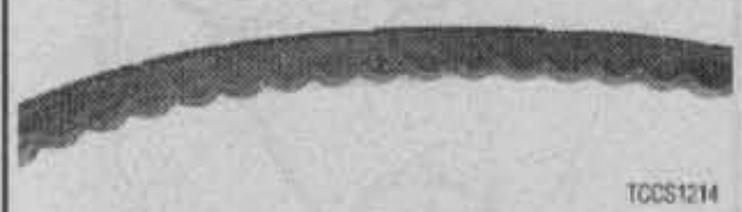

Fig. 49 An example of a healthy drive belt

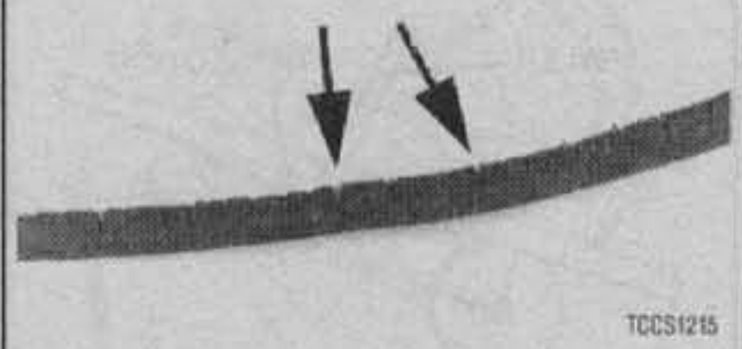

Fig. 50 Deep cracks in this belt will cause flex, building up heat that will eventually lead to belt failure

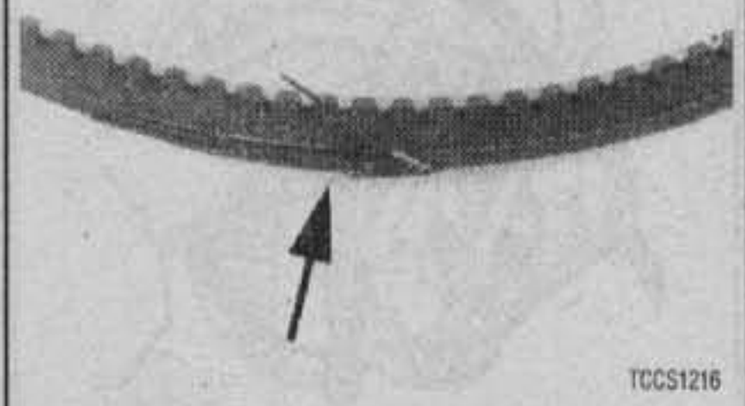

Fig. 51 The cover of this belt is worn, exposing the critical reinforcing cords to excessive wear

Fig. 52 Installing too wide a belt can result in serious belt wear and/or breakage

Belt tension for a used belt should be maintained at 110 lbs. (except ¼ in. wide belts) or 60 lbs. (¼ in. wide belts). If a belt tension gauge is not available, the following procedures may be used.

ADJUSTING

See Figures 53 thru 60

CAUTION

On models equipped with an electric cooling fan, disconnect the negative battery cable or fan motor wiring harness connector before replacing or adjusting drive belts. The fan may come on, under certain circumstances, even though the ignition is OFF.

Alternator (Fan Drive) Belt

1. Position the ruler perpendicular to the drive belt at its longest straight run. Test the tightness of the belt by pressing it firmly with your thumb. The deflection should not exceed ¼ in. (6mm).
2. If the deflection exceeds ¼ in. (6mm), loosen the alternator mounting and adjusting arm bolts.
3. Place a 1 in. open end or adjustable wrench on the adjusting ridge cast on the body, and pull on the wrench until the proper tension is achieved.
4. Holding the alternator in place to maintain tension, tighten the adjusting arm bolt. Recheck the belt tension. When the belt is properly tensioned, tighten the alternator mounting bolt.

Power Steering Drive Belt

1. Hold a ruler perpendicularly to the drive belt at its longest run, test the tightness of the belt by pressing it firmly with your thumb. The deflection should not exceed ¼ in. (6mm).
2. To adjust the belt tension, loosen the adjusting and mounting bolts on the front face of the steering pump cover plate (hub side).
3. Using a pry bar or broom handle on the pump hub, move the power steering pump toward or away from the engine until the proper tension is reached. Do not pry against the reservoir as it is relatively soft and easily deformed.
4. Holding the pump in place, tighten the adjusting arm bolt and then recheck the belt tension. When the belt is properly tensioned tighten the mounting bolts.

Air Conditioning Compressor Drive Belt

1. Position a ruler perpendicular to the drive belt at its longest run. Test the tightness of the belt by pressing it firmly with your thumb. The deflection should not exceed ¼ in. (6mm).
2. If the engine is equipped with an idler pulley, loosen the idler pulley adjusting bolt, insert a pry bar between the pulley and the engine (or in the idler

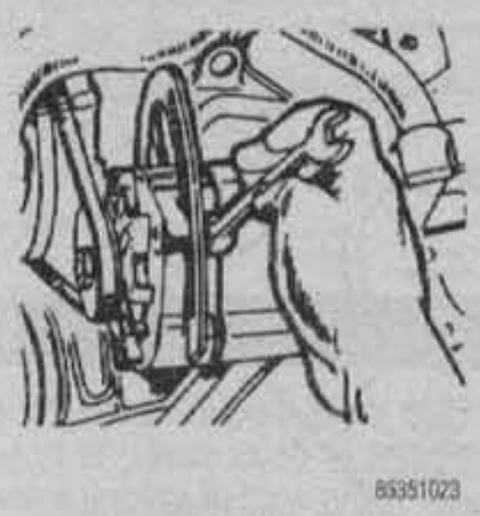

Fig. 53 To adjust belt tension or replace belts, first loosen the component's mounting and adjusting bolts slightly

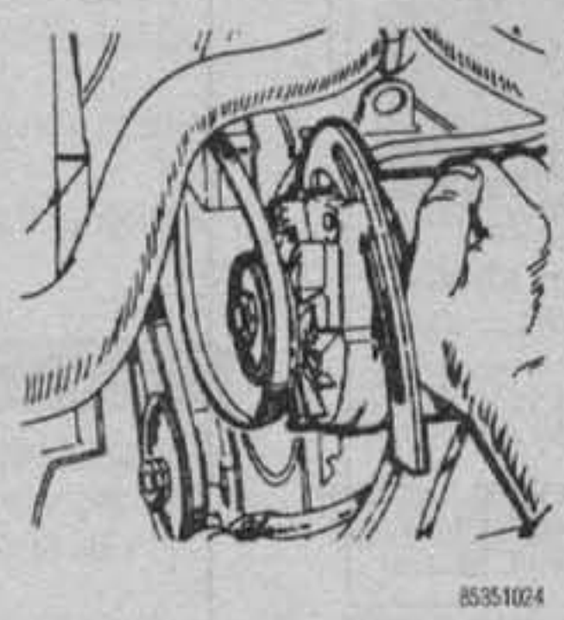

Fig. 54 Push the component toward the engine and slip off the belt

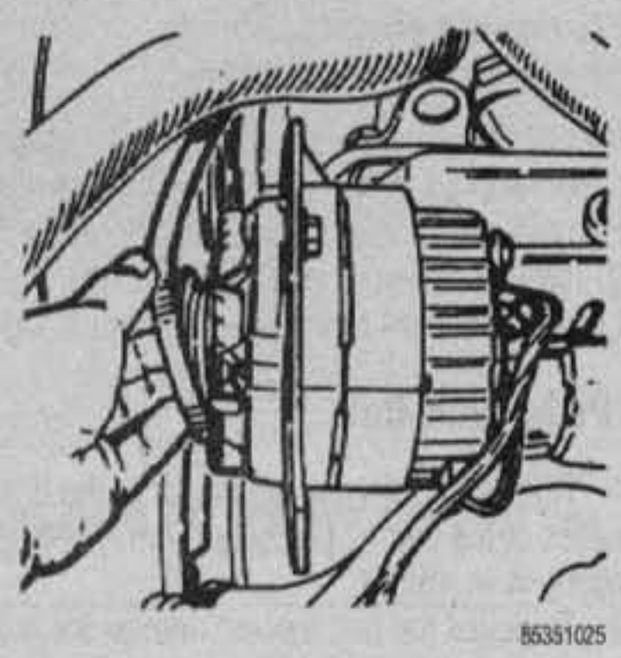

Fig. 55 Slip the new belt over the pulley

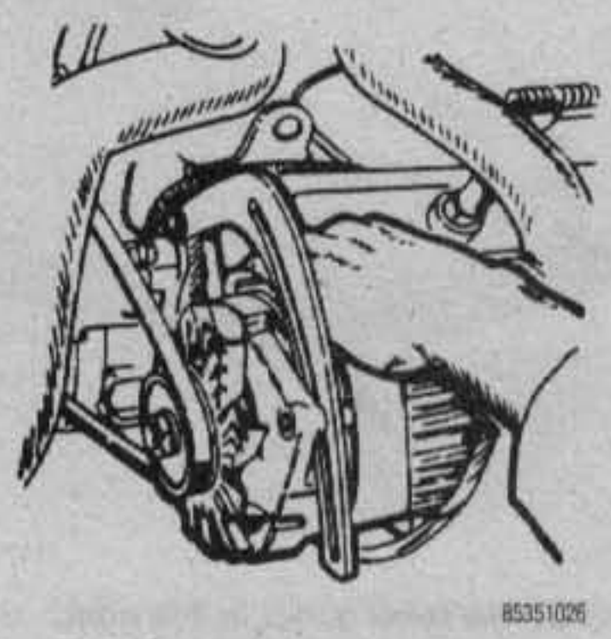

Fig. 56 Pull outward on the component and tighten the mounting bolts

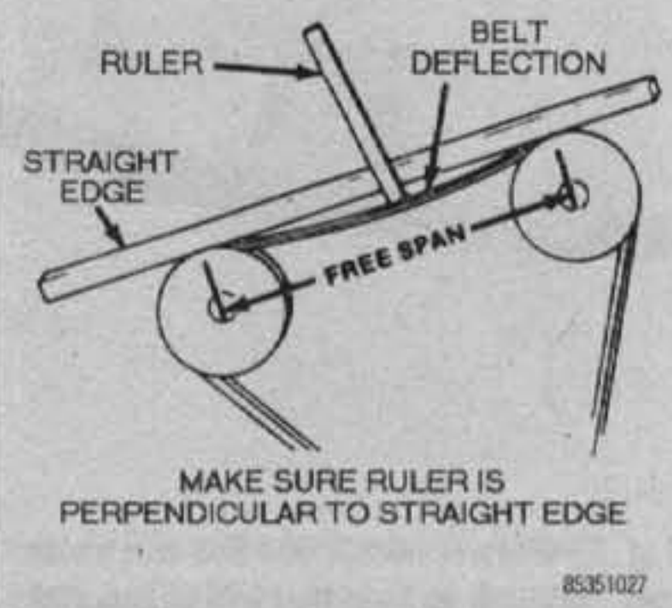

Fig. 57 Measuring belt deflection

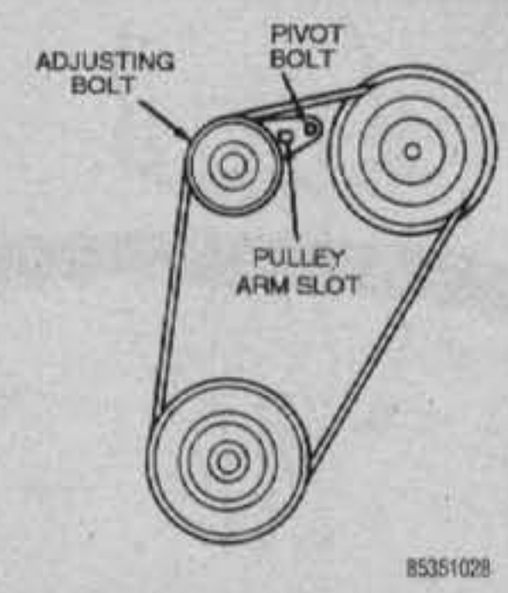

Fig. 58 Some pulleys have a rectangular slot to aid in moving the accessories to be tightened

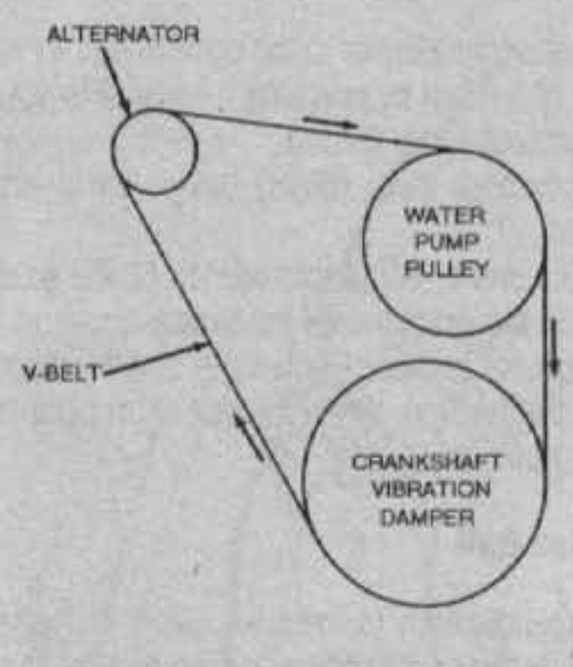

Fig. 59 V-belt routing, alternator only—2.5L and 4.2L engines except California

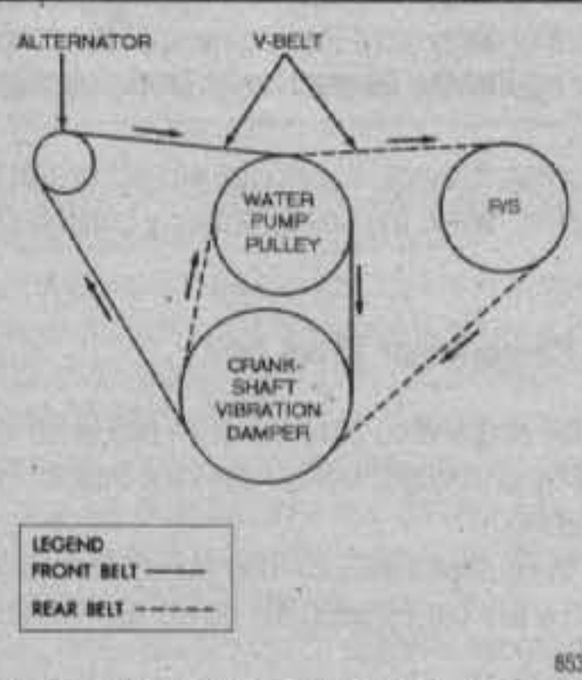

Fig. 60 V-belt routing, alternator and power steering—2.5L and 4.2L engines except California

pulley adjusting slot), and adjust the tension accordingly. If the engine is not equipped with an idler pulley, the alternator must be moved to accomplish this adjustment, as outlined under Alternator (Fan Drive) Belt.

3. When the proper tension is reached, tighten the idler pulley adjusting bolt (if so equipped) or the alternator adjusting and mounting bolts.

Air Pump Drive Belt

1. Position a ruler perpendicular to the drive belt at its longest run. Test the tightness of the belt by pressing it firmly with your thumb. The deflection should be about ¼ in. (6mm).

2. To adjust the belt tension, loosen the adjusting arm bolt slightly. If necessary, also loosen the mounting belt slightly.

3. Using a pry bar or broom handle, pry against the pump rear cover to move the pump toward or away from the engine as necessary.

CAUTION

Do not pry against the pump housing itself, as damage to the housing may result.

4. Holding the pump in place, tighten the adjusting arm bolt and recheck the tension. When the belt is properly tensioned, tighten the mounting bolt.

Serpentine (Single) Drive Belt

See Figures 61 thru 68

Some models feature a single, wide, ribbed V-belt that drives the water pump, alternator, and (on some models) the air conditioner compressor. Belt tension is adjusted at the power steering pump (or idler pulley, if not equipped with power steering).

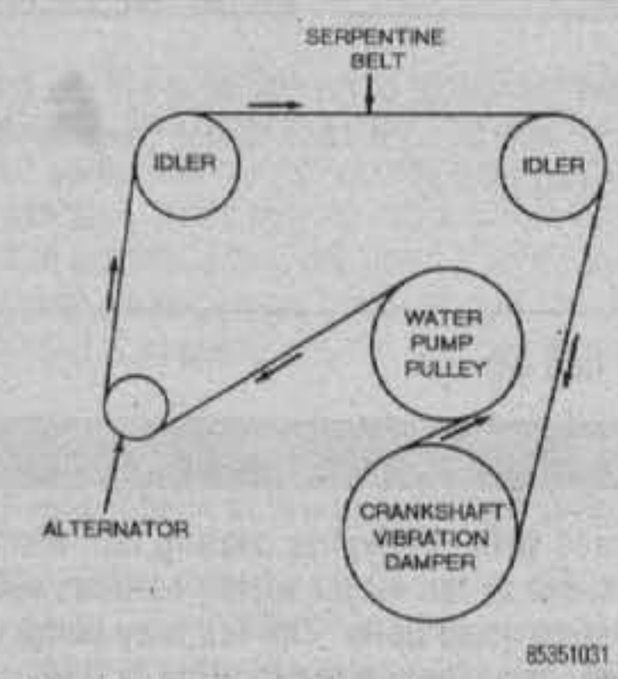

Fig. 61 Serpentine belt routing, alternator only—4.2L engines through 1989

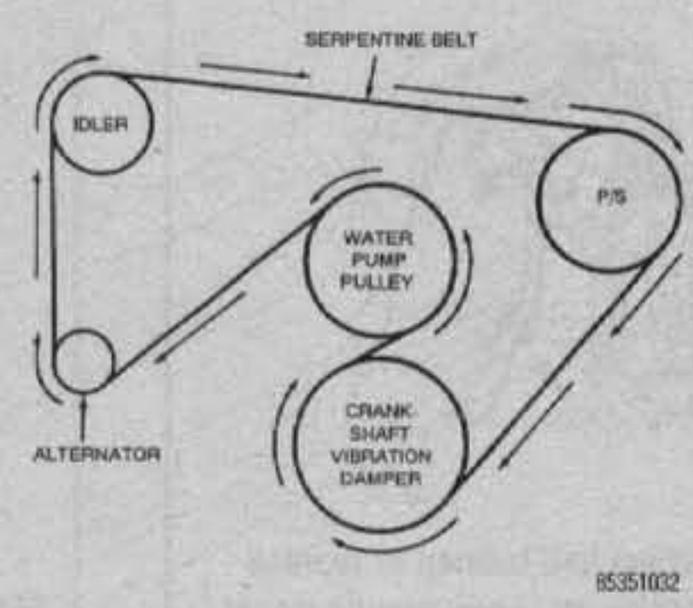

Fig. 62 Serpentine belt routing, alternator and power steering—4.2L California engines through 1989

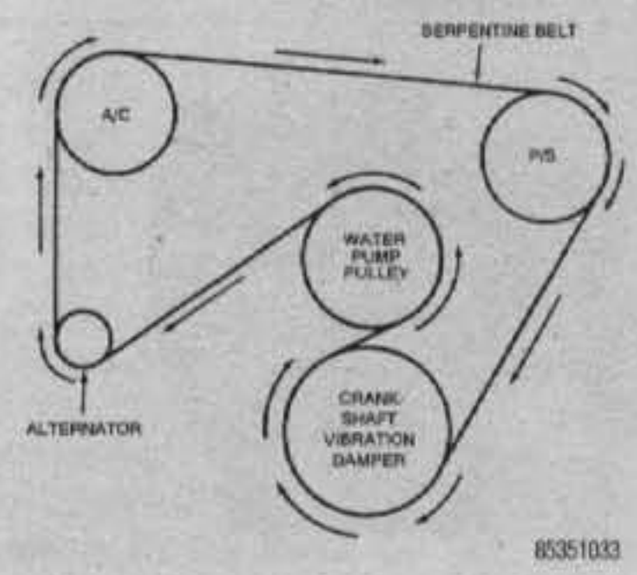

Fig. 63 Serpentine belt routing, alternator A/C and power steering—4.2L engines through 1989

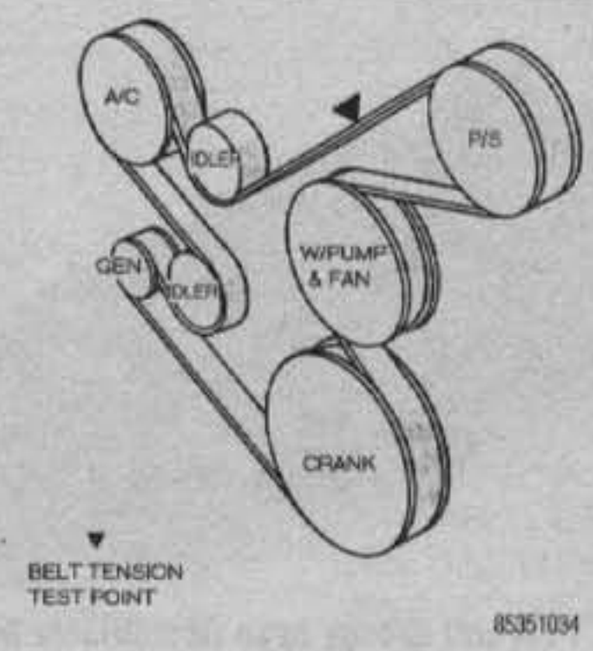

Fig. 64 Serpentine belt routing—1990–95 4.0L engines with A/C

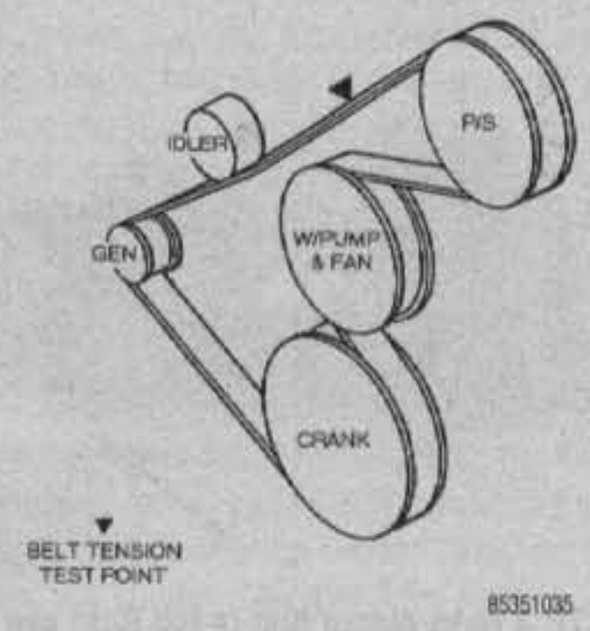

Fig. 65 Serpentine belt routing—1990–95 2.5L and 4.0L engines without A/C

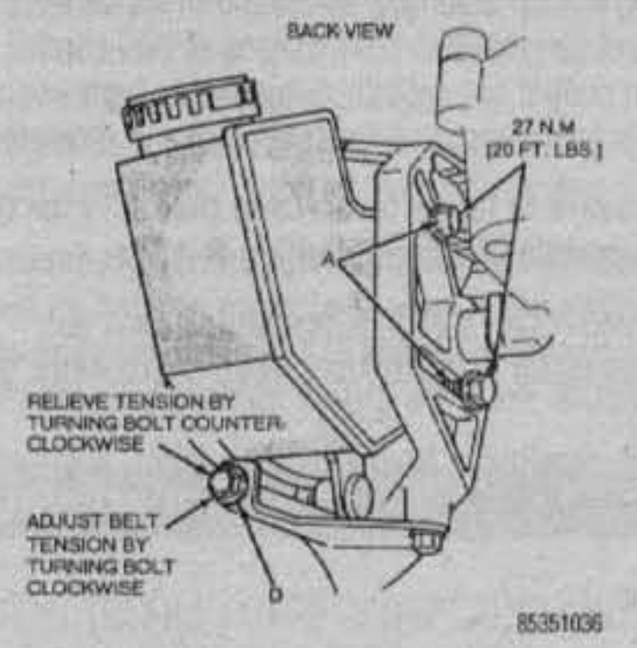

Fig. 66 Common power steering pump rear mounting bolts

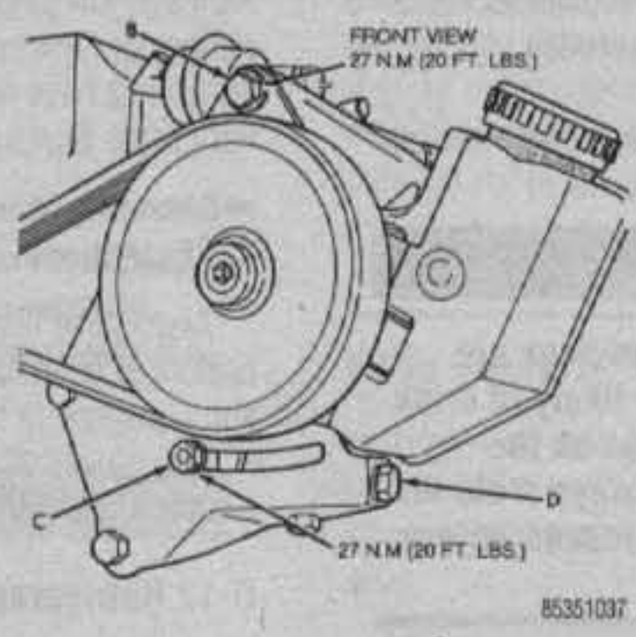

Fig. 67 Common power steering pump front mounting bolts/locknut

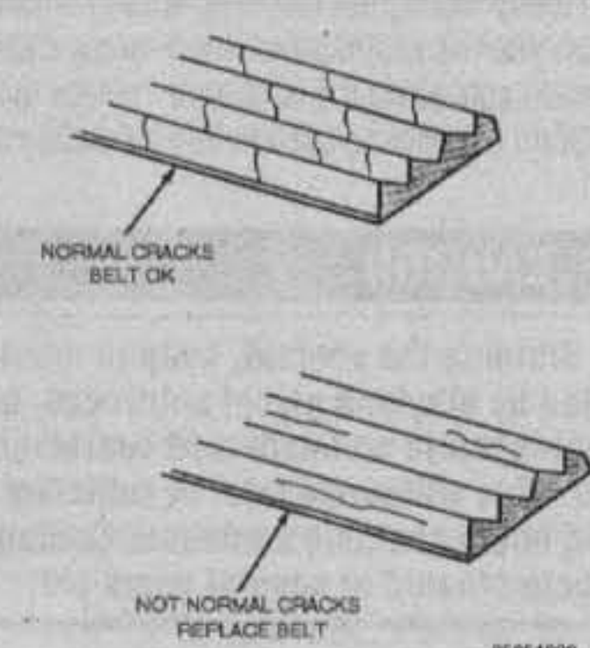

Fig. 68 Serpentine belt wear patterns

To replace or adjust the serpentine drive belt:

1. Loosen the two rear power steering pump mounting bolts (**A** in the accompanying illustration).
2. Loosen the upper pump pivot bolt (**B**) and loosen the locknut (**C**), as indicated in the illustration.
3. Loosen the pump adjusting bolt (**D** in the accompanying illustration).
4. If the belt is to be replaced, remove the belt, then reroute a new belt on the pulleys.

WARNING

Check to make sure that the belt is routed and located properly in all drive pulleys before applying tensioner pressure. Rotating the water pump in the wrong direction will cause the engine to overheat.

5. Tighten the pump adjusting bolt (**D** in the illustration), to attain the proper tension. Use a belt tension gauge and follow its instructions. Adjust a new belt to 180–200 lbs. force (800–900 Nm) and a used belt to 140–160 lbs. force (623–712 Nm).
6. Tighten the rear pump mounting bolts, pivot bolt and locknut to 20 ft. lbs. (27 Nm).
7. After the power steering pump has been tightened into position, recheck the belt tension.

Hoses

Radiator hoses are generally of two constructions, the preformed (molded) type, which is custom made for a particular application, and the spring-loaded type, which is made to fit several different applications. Heater hoses are all of the same general construction.

REMOVAL & INSTALLATION

See Figures 69, 70, 71 and 72

Inspect the condition of the radiator and heater hoses periodically. Early spring and at the beginning of the fall or winter, when you are performing other maintenance, are good times. Make sure the engine and cooling system are

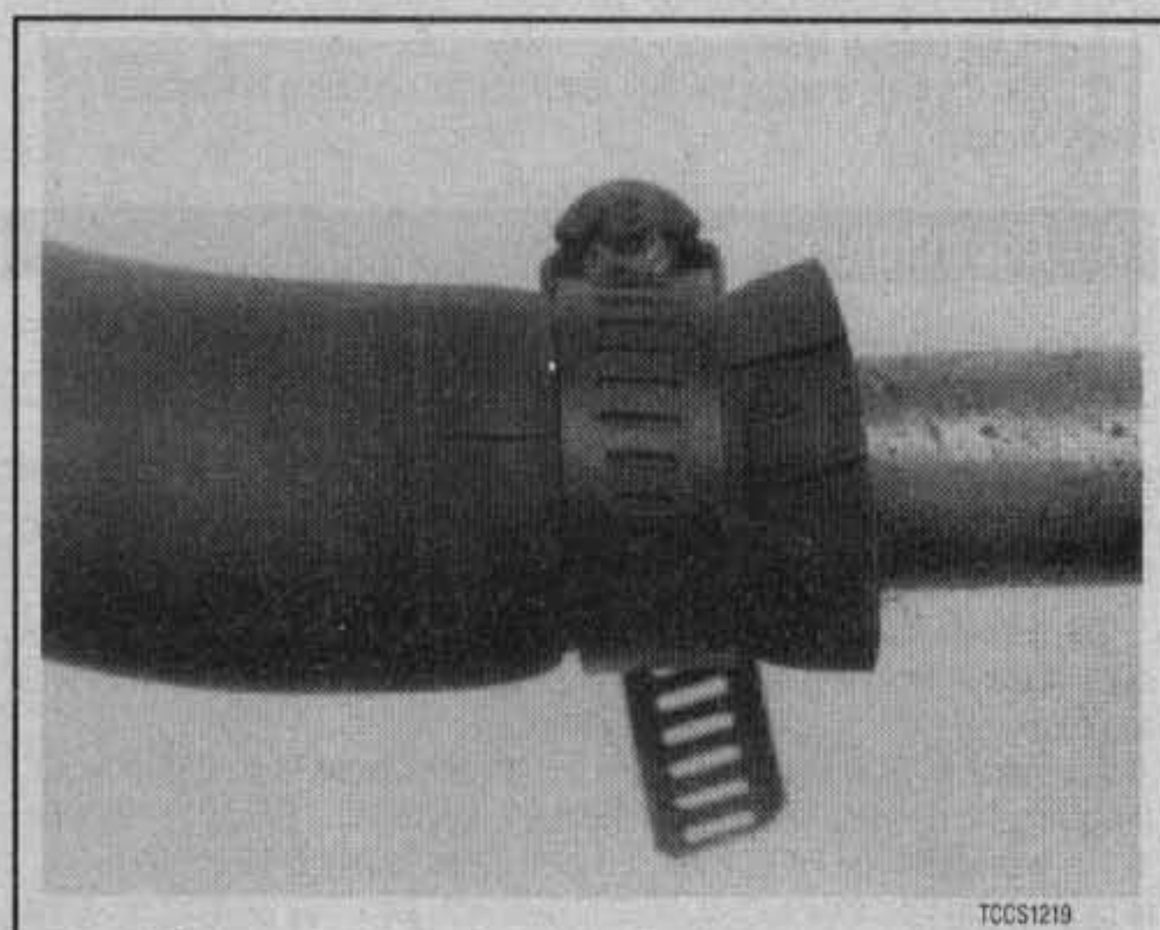

Fig. 69 The cracks developing along this hose are a result of age-related hardening

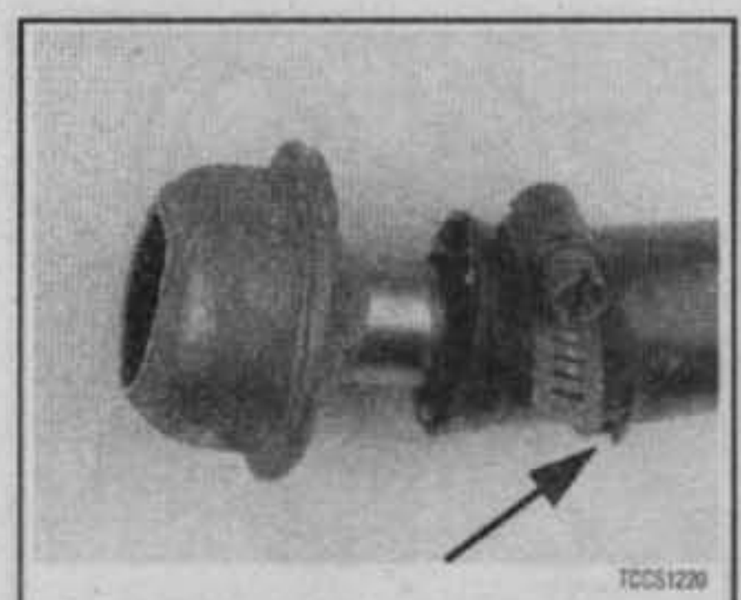

TCCS1229

Fig. 70 A hose clamp that is too tight can cause older hoses to separate and tear on either side of the clamp

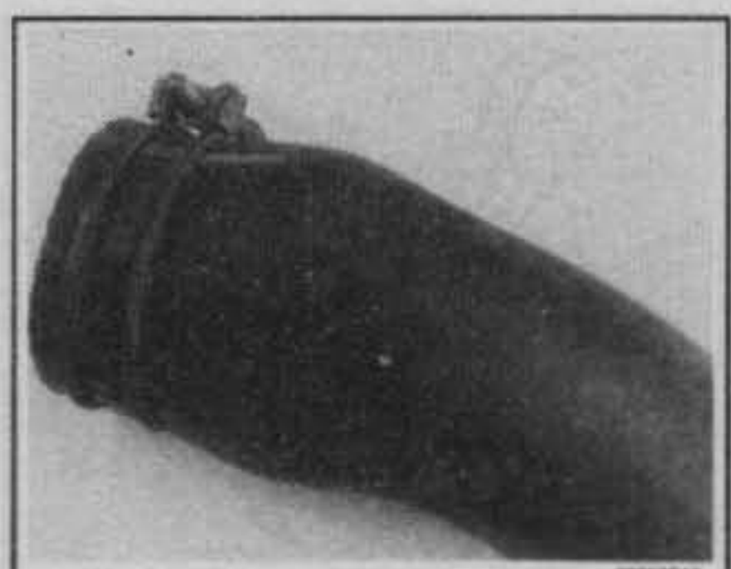

Fig. 71 A soft spongy hose (identifiable by the swollen section) will eventually burst and should be replaced

Fig. 72 Hoses are likely to deteriorate from the inside if the cooling system is not periodically flushed

cold. Visually inspect for cracking, rotting or collapsed hoses, replace as necessary. Run your hand along the length of the hose. If a weak or swollen spot is noted when squeezing the hose wall, replace the hose.

1. Drain the cooling system into a suitable container (if the coolant is to be reused).

CAUTION

When draining the coolant, keep in mind that cats and dogs are attracted by ethylene glycol antifreeze, and are quite likely to drink any that is left in an uncovered container or in puddles on the ground. This will prove fatal in sufficient quantity. Always drain the coolant into a sealable container. Coolant should be reused unless it is contaminated or several years old.

2. Loosen the hose clamps at each end of the hose that requires replacement.
3. Twist, pull and slide the hose off the radiator, water pump, thermostat or heater connection.

To install:

4. Clean the hose mounting connections. Position the hose clamps on the new hose.
5. Coat the connection surfaces with a water resistant sealer and slide the hose into position. Make sure the hose clamps are located beyond the raised bead of the connector (if equipped) and centered in the clamping area of the connection.
6. Tighten the clamps to 20–30 inch lbs. (2–3 Nm). Do not overtighten.
7. Fill the cooling system.
8. Start the engine and allow it to reach normal operating temperature. Check for leaks.

Air Conditioning System

SYSTEM SERVICE & REPAIR

➡It is recommended that the A/C system be serviced by an EPA Section 609 certified automotive technician utilizing a refrigerant recovery/recycling machine.

The do-it-yourselfer should not service his/her own vehicle's A/C system for many reasons, including legal concerns, personal injury, environmental damage and cost.

According to the U.S. Clean Air Act, it is a federal crime to service or repair (involving the refrigerant) a Motor Vehicle Air Conditioning (MVAC) system for money without being EPA certified. It is also illegal to vent R-12 and R-134a refrigerants into the atmosphere. State and/or local laws may be more strict than the federal regulations, so be sure to check with your state and/or local authorities for further information.

➡Federal law dictates that a fine of up to $25,000 may be levied on people convicted of venting refrigerant into the atmosphere.

When servicing an A/C system you run the risk of handling or coming in contact with refrigerant, which may result in skin or eye irritation or frostbite. Although low in toxicity (due to chemical stability), inhalation of concentrated refrigerant fumes is dangerous and can result in death; cases of fatal cardiac arrhythmia have been reported in people accidentally subjected to high levels of refrigerant. Some early symptoms include loss of concentration and drowsiness.

➡Generally, the limit for exposure is lower for R-134a than it is for R-12. Exceptional care must be practiced when handling R-134a.

Also, some refrigerants can decompose at high temperatures (near gas heaters or open flame), which may result in hydrofluoric acid, hydrochloric acid and phosgene (a fatal nerve gas).

It is usually more economically feasible to have a certified MVAC automotive technician perform A/C system service on your vehicle.

R-12 Refrigerant Conversion

If your vehicle still uses R-12 refrigerant, one way to save A/C system costs down the road is to investigate the possibility of having your system converted to R-134a. The older R-12 systems can be easily converted to R-134a refrigerant by a certified automotive technician by installing a few new components and changing the system oil.

The cost of R-12 is steadily rising and will continue to increase, because it is no longer imported or manufactured in the United States. Therefore, it is often possible to have an R-12 system converted to R-134a and recharged for less than it would cost to just charge the system with R-12.

If you are interested in having your system converted, contact local automotive service stations for more details and information.

PREVENTIVE MAINTENANCE

Although the A/C system should not be serviced by the do-it-yourselfer, preventive maintenance should be practiced to help maintain the efficiency of the vehicle's A/C system. Be sure to perform the following:

- The easiest and most important preventive maintenance for your A/C system is to be sure that it is used on a regular basis. Running the system for five minutes each month (no matter what the season) will help ensure that the seals and all internal components remain lubricated.

➡Some vehicles automatically operate the A/C system compressor whenever the windshield defroster is activated. Therefore, the A/C system would not need to be operated each month if the defroster was used.

- In order to prevent heater core freeze-up during A/C operation, it is necessary to maintain proper antifreeze protection. Be sure to properly maintain the engine cooling system.
- Any obstruction of or damage to the condenser configuration will restrict air flow which is essential to its efficient operation. Keep this unit clean and in proper physical shape.

➡Bug screens which are mounted in front of the condenser (unless they are original equipment) are regarded as obstructions.

- The condensation drain tube expels any water which accumulates on the bottom of the evaporator housing into the engine compartment. If this tube is obstructed, the air conditioning performance can be restricted and condensation buildup can spill over onto the vehicle's floor.

SYSTEM INSPECTION

Although the A/C system should not be serviced by the do-it-yourselfer, system inspections should be performed to help maintain the efficiency of the vehicle's A/C system. Be sure to perform the following:

The easiest and often most important check for the air conditioning system consists of a visual inspection of the system components. Visually inspect the system for refrigerant leaks, damaged compressor clutch, abnormal compressor drive belt tension and/or condition, plugged evaporator drain tube, blocked condenser fins, disconnected or broken wires, blown fuses, corroded connections and poor insulation.

A refrigerant leak will usually appear as an oily residue at the leakage point in the system. The oily residue soon picks up dust or dirt particles from the surrounding air and appears greasy. Through time, this will build up and appear to be a heavy dirt impregnated grease.

For a thorough visual and operational inspection, check the following:

- Check the surface of the radiator and condenser for dirt, leaves or other material which might block air flow.
- Check for kinks in hoses and lines. Check the system for leaks.
- Make sure the drive belt is properly tensioned. During operation, make sure the belt is free of noise or slippage.
- Make sure the blower motor operates at all appropriate positions, then check for distribution of the air from all outlets.

➡Remember that in high humidity, air discharged from the vents may not feel as cold as expected, even if the system is working properly. This is because moisture in humid air retains heat more effectively than dry air, thereby making humid air more difficult to cool.

Windshield Wipers

ELEMENT (REFILL) CARE & REPLACEMENT

See Figures 73, 74 and 75

For maximum effectiveness and longest element life, the windshield and wiper blades should be kept clean. Dirt, tree sap, road tar and so on will cause streaking, smearing and blade deterioration if left on the glass. It is advisable to wash the windshield carefully with a commercial glass cleaner at least once a month. Wipe off the rubber blades with the wet rag afterwards. Do not attempt to move wipers across the windshield by hand; damage to the motor and drive mechanism will result.

To inspect and/or replace the wiper blade elements, place the wiper switch in the **LOW** speed position and the ignition switch in the **ACC** position. When the wiper blades are approximately vertical on the windshield, turn the ignition switch to **OFF**.

Examine the wiper blade elements. If they are found to be cracked, broken or torn, they should be replaced immediately. Replacement intervals will vary with usage, although ozone deterioration usually limits element life to about one year. If the wiper pattern is smeared or streaked, or if the blade chatters across the glass, the elements should be replaced. It is easiest and most sensible to replace the elements in pairs.

If your vehicle is equipped with aftermarket blades, there are several different types of refills and your vehicle might have any kind. Aftermarket blades and arms rarely use the exact same type blade or refill as the original equipment.

Regardless of the type of refill used, be sure to follow the part manufacturer's instructions closely. Make sure that all of the frame jaws are engaged as the refill is pushed into place and locked. If the metal blade holder and frame are allowed to touch the glass during wiper operation, the glass will be scratched.

Tires and Wheels

Common sense and good driving habits will afford maximum tire life. Make sure that you don't overload the vehicle or run with incorrect pressure in the tires. Either of these will increase tread wear. Fast starts, sudden stops and sharp cornering are hard on tires and will shorten their useful life span.

➡For optimum tire life, keep the tires properly inflated, rotate them often and have the wheel alignment checked periodically.

Inspect your tires frequently. Be especially careful to watch for bubbles in the tread or sidewall, deep cuts or underinflation. Replace any tires with bubbles in the sidewall. If cuts are so deep that they penetrate to the cords, discard the tire. Any cut in the sidewall of a radial tire renders it unsafe. Also look for uneven tread wear patterns that may indicate the front end is out of alignment or that the tires are out of balance.

TIRE ROTATION

See Figure 76

Tires must be rotated periodically to equalize wear patterns that vary with a tire's position on the vehicle. Tires will also wear in an uneven way as the front steering/suspension system wears to the point where the alignment should be reset.

Rotating the tires will ensure maximum life for the tires as a set, so you will not have to discard a tire early due to wear on only part of the tread. Regular rotation is required to equalize wear.

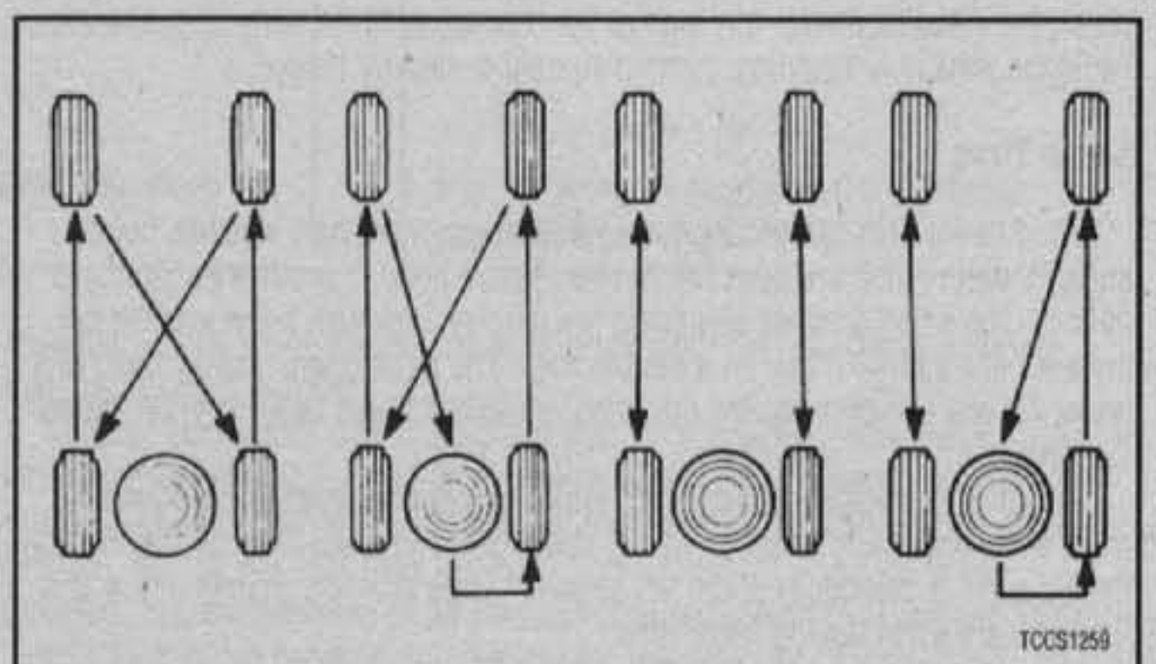

Fig. 76 Common tire rotation patterns for 4 and 5-wheel rotations

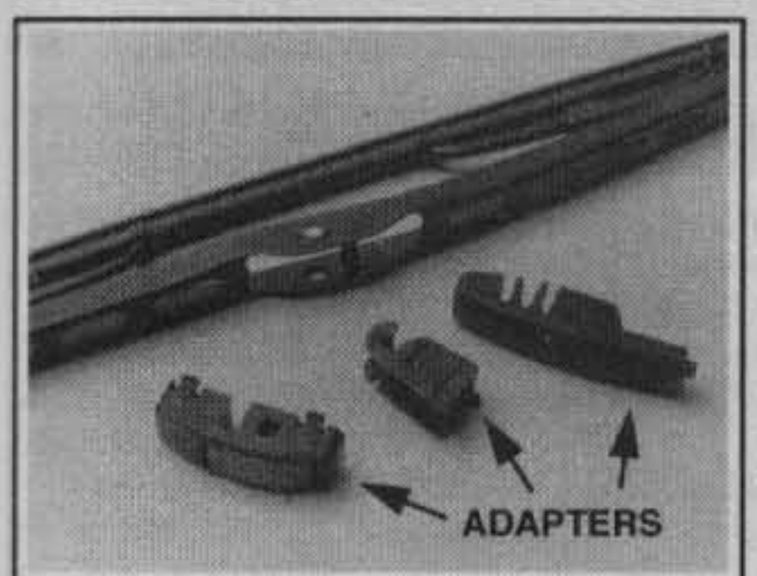

Fig. 73 Most aftermarket blades are available with multiple adapters to fit different vehicles

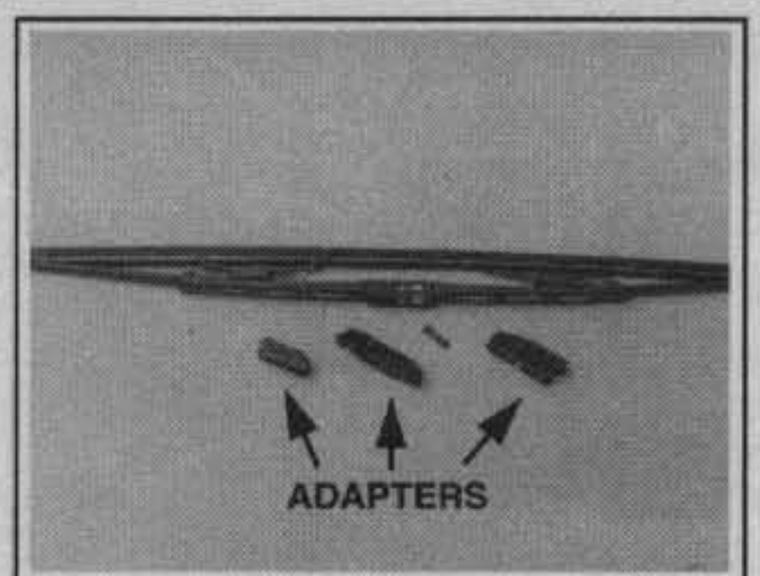

Fig. 74 Choose a blade which will fit your vehicle, and that will be readily available next time you need blades

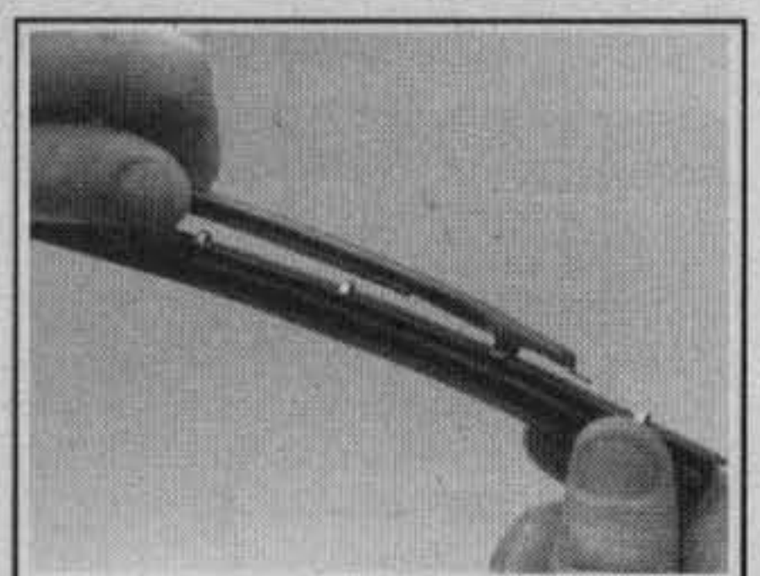

Fig. 75 When installed, be certain the blade is fully inserted into the backing

When rotating "unidirectional tires," make sure that they always roll in the same direction. This means that a tire used on the left side of the vehicle must not be switched to the right side and vice-versa. Such tires should only be rotated front-to-rear or rear-to-front, while always remaining on the same side of the vehicle. These tires are marked on the sidewall as to the direction of rotation; observe the marks when reinstalling the tire(s).

Some styled or "mag" wheels may have different offsets front to rear. In these cases, the rear wheels must not be used up front and vice-versa. Furthermore, if these wheels are equipped with unidirectional tires, they cannot be rotated unless the tire is remounted for the proper direction of rotation.

➡The compact or space-saver spare is strictly for emergency use. It must never be included in the tire rotation or placed on the vehicle for everyday use.

TIRE DESIGN

See Figure 77

For maximum satisfaction, tires should be used in sets of four. Mixing of different brands or types (radial, bias-belted, fiberglass belted) should be avoided. In most cases, the vehicle manufacturer has designated a type of tire on which the vehicle will perform best. Your first choice when replacing tires should be to use the same type of tire that the manufacturer recommends.

When radial tires are used, tire sizes and wheel diameters should be selected to maintain ground clearance and tire load capacity equivalent to the original specified tire. Radial tires should always be used in sets of four.

CAUTION

Radial tires should never be used on only the front axle.

When selecting tires, pay attention to the original size as marked on the tire. Most tires are described using an industry size code sometimes referred to as P-Metric. This allows the exact identification of the tire specifications, regardless of the manufacturer. If selecting a different tire size or brand, remember to check the installed tire for any sign of interference with the body or suspension while the vehicle is stopping, turning sharply or heavily loaded.

Snow Tires

Good radial tires can produce a big advantage in slippery weather, but in snow, a street radial tire does not have sufficient tread to provide traction and control. The small grooves of a street tire quickly pack with snow and the tire behaves like a billiard ball on a marble floor. The more open, chunky tread of a snow tire will self-clean as the tire turns, providing much better grip on snowy surfaces.

To satisfy municipalities requiring snow tires during weather emergencies, most snow tires carry either an M + S designation after the tire size stamped on the sidewall, or the designation "all-season." In general, no change in tire size is necessary when buying snow tires.

Most manufacturers strongly recommend the use of 4 snow tires on their vehicles for reasons of stability. If snow tires are fitted only to the drive wheels, the opposite end of the vehicle may become very unstable when braking or turning on slippery surfaces. This instability can lead to unpleasant endings if the driver can't counteract the slide in time.

Note that snow tires, whether 2 or 4, will affect vehicle handling in all non-snow situations. The stiffer, heavier snow tires will noticeably change the turning and braking characteristics of the vehicle. Once the snow tires are installed, you must re-learn the behavior of the vehicle and drive accordingly.

➡Consider buying extra wheels on which to mount the snow tires. Once done, the "snow wheels" can be installed and removed as needed. This eliminates the potential damage to tires or wheels from seasonal removal and installation. Even if your vehicle has styled wheels, see if inexpensive steel wheels are available. Although the look of the vehicle will change, the expensive wheels will be protected from salt, curb hits and pothole damage.

TIRE STORAGE

If they are mounted on wheels, store the tires at proper inflation pressure. All tires should be kept in a cool, dry place. If they are stored in the garage or basement, do not let them stand on a concrete floor; set them on strips of wood, a mat or a large stack of newspaper. Keeping them away from direct moisture is of paramount importance. Tires should not be stored upright, but in a flat position.

INFLATION & INSPECTION

See Figures 78 thru 83

The importance of proper tire inflation cannot be overemphasized. A tire employs air as part of its structure. It is designed around the supporting strength of the air at a specified pressure. For this reason, improper inflation drastically reduces the tire's ability to perform as intended. A tire will lose some air in day-to-day use; having to add a few pounds of air periodically is not necessarily a sign of a leaking tire.

Two items should be a permanent fixture in every glove compartment: an accurate tire pressure gauge and a tread depth gauge. Check the tire pressure (including the spare) regularly with a pocket type gauge. Too often, the gauge on the end of the air hose at your corner garage is not accurate because it suffers too much abuse. Always check tire pressure when the tires are cold, as pressure increases with temperature. If you must move the vehicle to check the tire inflation, do not drive more than a mile before checking. A cold tire is generally one that has not been driven for more than three hours.

A plate or sticker is normally provided somewhere in the vehicle (door post, hood, tailgate or trunk lid) which shows the proper pressure for the tires. Never counteract excessive pressure build-up by bleeding off air pressure (letting some air out). This will cause the tire to run hotter and wear quicker.

CAUTION

Never exceed the maximum tire pressure embossed on the tire! This is the pressure to be used when the tire is at maximum loading, but it is rarely the correct pressure for everyday driving. Consult the owner's manual or the tire pressure sticker for the correct tire pressure.

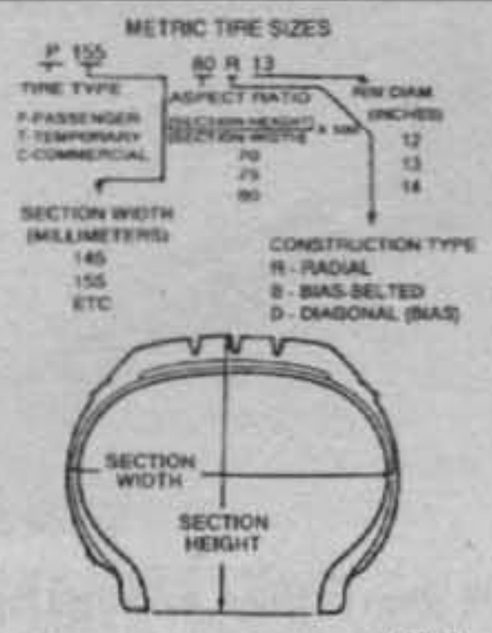

Fig. 77 P-Metric tire coding

Fig. 78 Tires with deep cuts, or cuts which bulge, should be replaced immediately

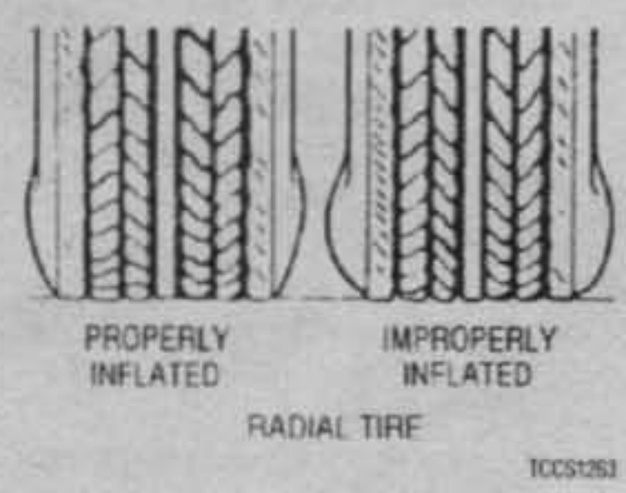

Fig. 79 Radial tires have a characteristic sidewall bulge; don't try to measure pressure by looking at the tire. Use a quality air pressure gauge

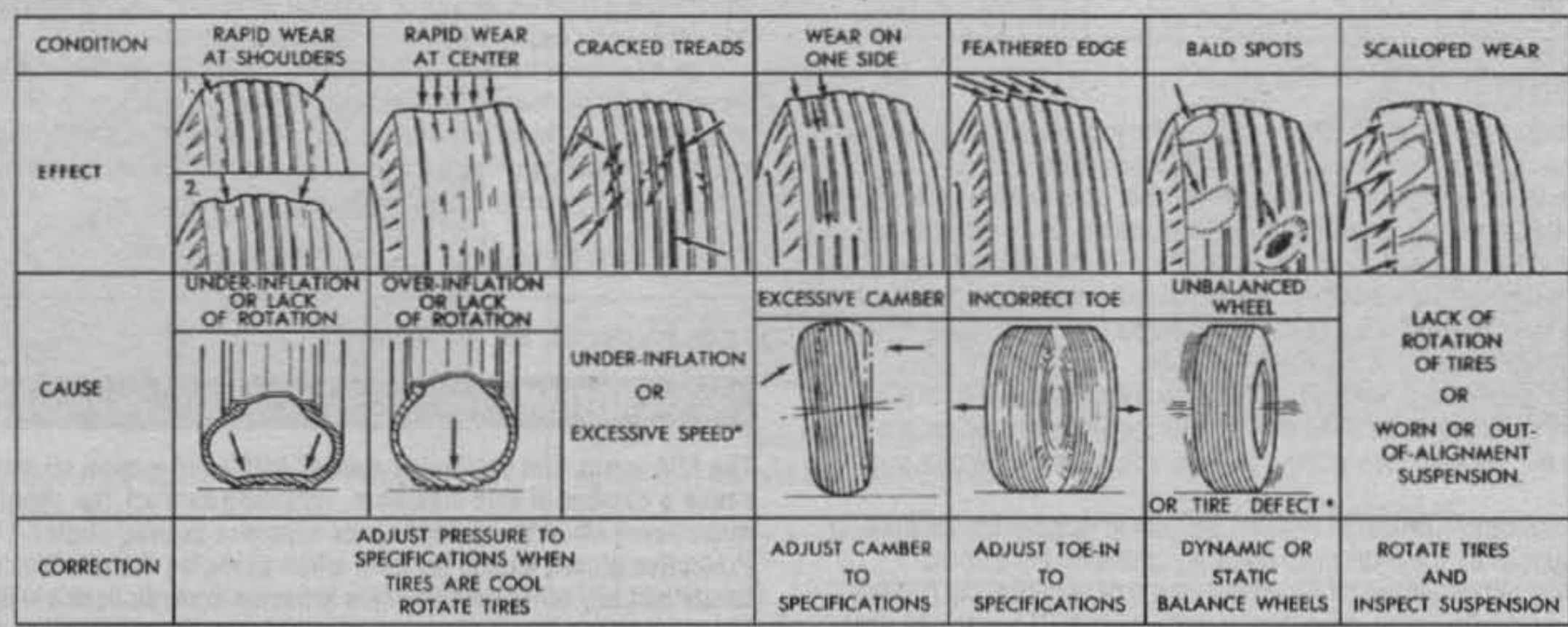

Fig. 80 Common tire wear patterns and causes

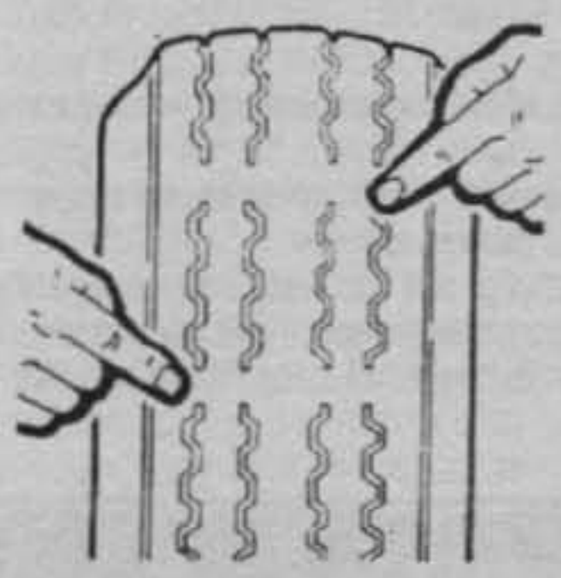

Fig. 81 Tread wear indicators will appear when the tire is worn

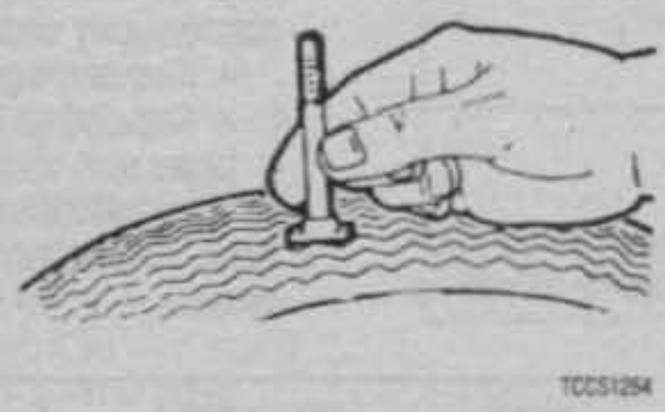

Fig. 82 Accurate tread depth indicators are inexpensive and handy

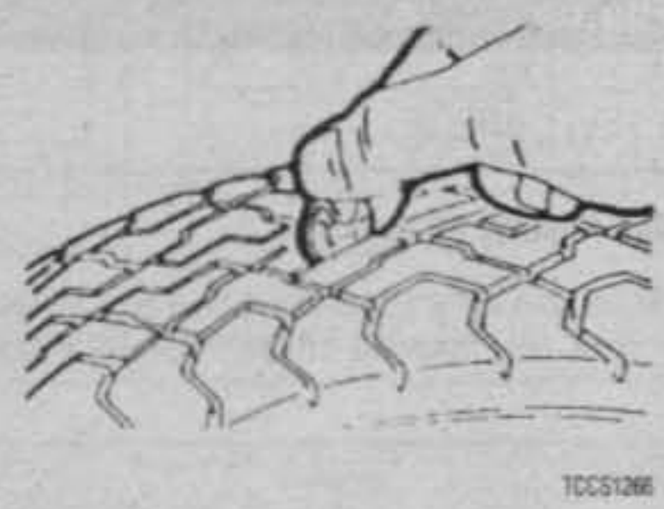

Fig. 83 A penny works well for a quick check of tread depth

Once you've maintained the correct tire pressures for several weeks, you'll be familiar with the vehicle's braking and handling personality. Slight adjustments in tire pressures can fine-tune these characteristics, but never change the cold pressure specification by more than 2 psi. A slightly softer tire pressure will give a softer ride but also yield lower fuel mileage. A slightly harder tire will give crisper dry road handling but can cause skidding on wet surfaces. Unless you're fully attuned to the vehicle, stick to the recommended inflation pressures.

All automotive tires have built-in tread wear indicator bars that show up as ½ in. (13mm) wide smooth bands across the tire when 1/16 in. (1.5mm) of tread remains. The appearance of tread wear indicators means that the tires should be replaced. In fact, many states have laws prohibiting the use of tires with less than this amount of tread.

You can check your own tread depth with an inexpensive gauge or by using a Lincoln head penny. Slip the Lincoln penny (with Lincoln's head upside-down) into several tread grooves. If you can see the top of Lincoln's head in 2 adjacent grooves, the tire has less than 1/16 in. (1.5mm) tread left and should be replaced. You can measure snow tires in the same manner by using the "tails" side of the Lincoln penny. If you can see the top of the Lincoln memorial, it's time to replace the snow tire(s).

FLUIDS AND LUBRICANTS

Fluid Disposal

Used fluids, such as engine oil, antifreeze, transmission oils and brake fluid are hazardous as waste material and must be disposed of properly.

Before draining any fluids, consult with your local municipal government. In may areas, waste oils are being accepted as part of the recycling program. A number of service stations, repair facilities and auto parts stores are accepting these waste fluids for recycling.

Be sure of the recycling center's policies before draining any fluids, as many will not accept different fluids that have been mixed together, such as oil and antifreeze.

Fuel and Oil Recommendations

FUEL

All models must use unleaded gasoline with a minimum octane rating of 87.

Poor quality gasoline can cause problems such as hard starting, stalling and stumble. If these problems should develop, always try a different brand of gasoline before considering service.

ENGINE OIL

See Figures 84 and 85

Many factors help to determine the proper oil for your Jeep. The big question is what viscosity to use and when. The whole question of viscosity revolves around the lowest anticipated ambient temperature to be encountered before your next oil change. The recommended viscosity ratings for temperatures ranging from below 0°F (−18°C) to above +32°F (0°C) are listed in the accompanying chart. They are broken down into multi-viscosities and single viscosities. Multi-viscosity oils are recommended because of their wider range of acceptable temperatures and driving conditions.

The SAE grade number indicates the viscosity of the engine oil, or its ability to lubricate under a given temperature. The lower the SAE grade number, the lighter the oil. The lower the viscosity, the easier it is to crank the engine in cold weather.

The API (American Petroleum Institute) designation indicates the classification of engine oil for use under given operating conditions. For gasoline engines, only oils designated for Service SG should be used. You can find the SG marking either on the top or on the side of the container. The viscosity rating should be in the same place. Select the viscosity rating to be used by your type of driving and the temperature range anticipated before the next oil change.

The multi-viscosity oils offer the advantage of being adaptable to temperature extremes. They allow easy starts at low temperatures, yet still give good protection at high speeds and warm temperatures.

Engine

OIL LEVEL CHECK

See Figures 86 and 87

Make sure that your vehicle is on a level surface to ensure an accurate reading. Then, raise the hood, position the holdup rod, and measure the oil with the dipstick which is on the left side of 4-cylinder engines and on the right of 6-cylinder engines. Add oil through the valve cover filler hole.

If the oil is below the ADD mark, add a quart of oil, then recheck the level. If the level is still not reading full, add only one-half quart at a time, until the dipstick reads FULL. Do not overfill the engine. When you check the oil, make sure that you allow sufficient time for all of the oil to drain back into the crankcase after stopping the engine. A minute or so should be enough time.

OIL AND FILTER CHANGE

See Figures 88, 89, 90, 91 and 92

CAUTION

The EPA warns that prolonged contact with used engine oil may cause a number of skin disorders, including cancer! You should make every effort to minimize your exposure to used engine oil. Protective gloves should be worn when changing the oil. Wash your hands and any other exposed skin areas as soon as possible after exposure to used engine oil. Soap and water, or waterless hand cleaner should be used.

The engine oil is to be changed every 4,000 miles (6,441 km). The oil should be changed more frequently, however, under conditions such as:

- Driving in dusty conditions
- Continuous trailer pulling or RV use
- Extensive or prolonged idling
- Extensive short trip operation in freezing temperatures (when the engine is not thoroughly warmed up)
- Frequent long runs at high speeds and high ambient temperatures
- Stop-and-go service, such as delivery vehicles

Under such conditions, the oil change and filter replacement intervals should be cut in half. Operation of the engine in severe conditions, such as a dust storm, volcanic ash or deep water, may require an immediate oil and filter change.

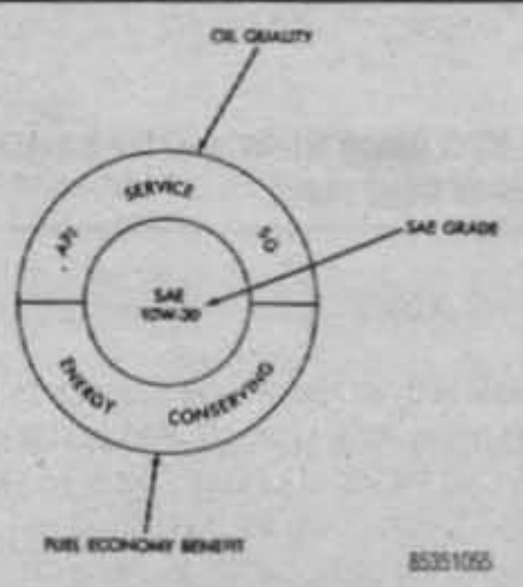

Fig. 84 Be sure to select the proper API quality classification and SAE viscosity grade of engine oil

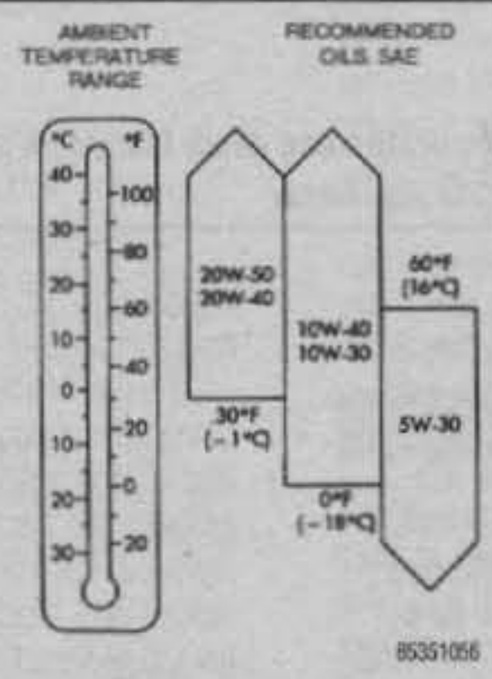

Fig. 85 Recommended viscosity grades

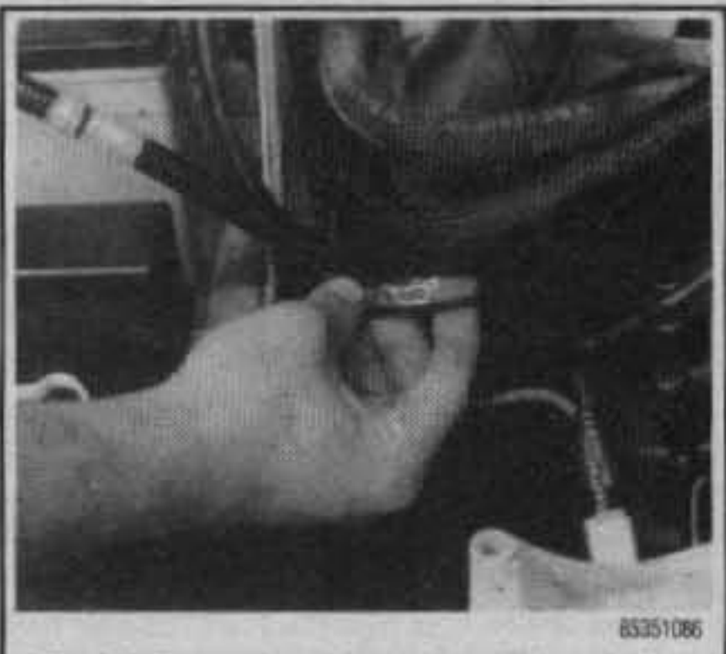

Fig. 86 Removing the engine oil level dipstick

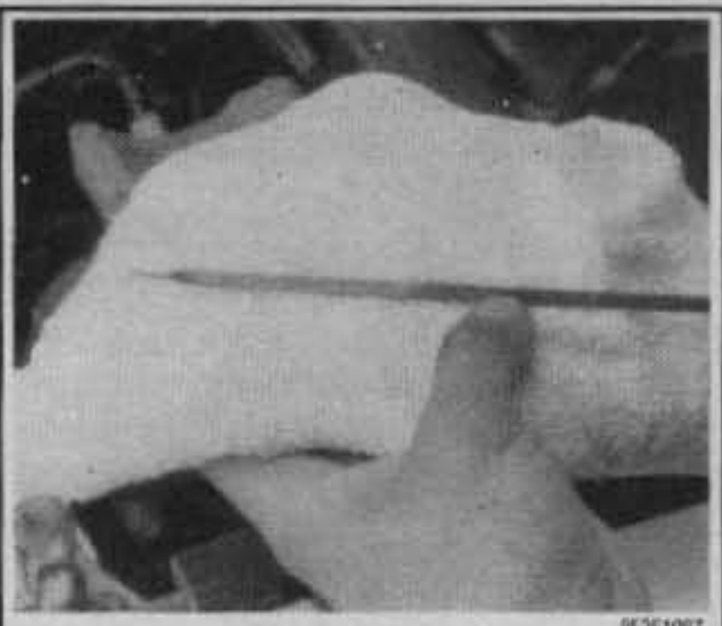

Fig. 87 Make sure the oil level is between the ADD and FULL marks

Fig. 88 Removing the engine oil fill cap from the valve cover

Fig. 89 Removing the engine oil pan drain plug

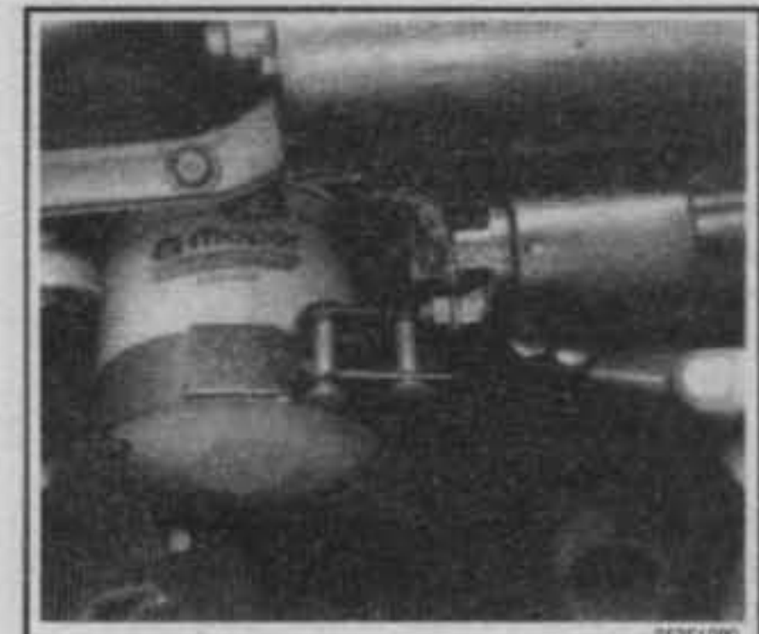

85351090

Fig. 90 Removing the engine oil filter with a strap wrench

TCCS1901

Fig. 91 Before installing a new oil filter, lightly coat the rubber gasket with clean oil

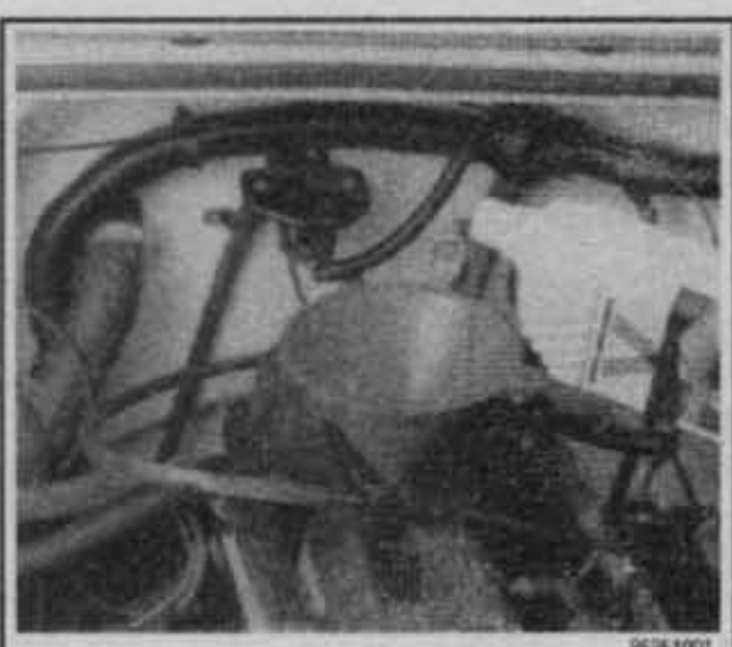

85351091

Fig. 92 Adding engine oil

Before draining the oil, make sure that the engine is at operating temperature. Hot oil will hold more impurities in suspension and will flow better, removing more oil and dirt.

➡Drain the oil into a suitable receptacle. Waste oil may be disposed of at a garage or service facility which accepts waste oil for recycling.

1. Position a suitable drain pan beneath the oil drain plug.
2. Loosen the drain plug, then unscrew it with your fingers, using a rag to shield your fingers from the heat. Push in on the plug as you unscrew it, so you can feel when all of the screw threads are out of the hole. You can then remove the plug quickly with the minimum amount of oil running down your arm. You will also have the plug in your hand and not in the bottom of a pan of hot oil.
3. Wipe off the plug while the oil drains. If so equipped, install a new crush gasket.
4. When the oil has finished draining, or has slowed to a trickle, install the drain plug. Tighten the plug, but be careful not to damage the threads.

Change the spin-on type oil filter every time you change the oil. Make sure that you have a pan under the filter before you start to remove it from the engine so you won't make a mess and, if some of the hot oil does happen to get on you, you will have a place to dump the filter in a hurry. The engine should be at operating temperature.

5. Loosen the filter with an appropriate oil filter wrench.
6. With a rag wrapped around the filter, unscrew the filter from the oil pump housing. Be careful of hot oil that might run down the side of the filter, especially on 6-cylinder engines.
7. Wipe the base of the mounting plate with a clean, dry cloth.
8. Smear a small amount of clean oil on the gasket with your finger, just enough to coat the entire surface where it comes in contact with the mounting plate.
9. Screw the new filter by hand onto the oil pump housing. Do not use the oil filter wrench! Tighten the filter only a quarter of a turn after it comes in contact with the mounting plate.

Manual Transmission

FLUID LEVEL CHECK

See Figure 93

The level of lubricant in the transmission should be maintained at the filler hole on all manual transmissions. This hole is on the right side. When you check the level in the transmission, make sure that the vehicle is level so that you get a true reading. When you remove the filler plug, lubricant should run out of the hole. Replace the plug quickly for a minimum loss of lubricant. If lubricant does not run out of the hole when the plug is removed, lubricant should be added until it does. Replace the plug as soon as the lubricant reaches the level of the hole.

DRAIN AND REFILL

Remove the drain plug which is at the bottom of the transmission. Allow all the lubricant to run out before replacing the plug. Replace the case with the correct viscosity oil. All manual transmissions use SAE 75W-90 API quality Grade GL-5 gear lubricant. Tighten the fill hole plug to 27 ft. lbs. (37 Nm).

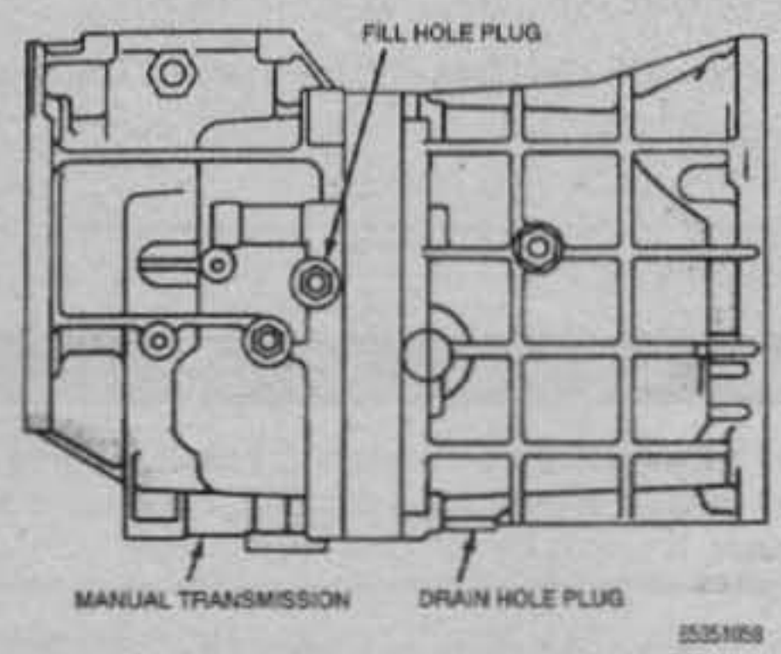

85351058

Fig. 93 Manual transmission fill and drain hole plugs

Automatic Transmission

FLUID LEVEL CHECK

See Figure 94

The fluid level in automatic transmissions is checked with a dipstick in the filler pipe at the right rear of the engine. The fluid level should be maintained between the ADD and FULL marks on the end of the dipstick with the automatic transmission fluid at normal operating temperatures. To raise the level from the ADD mark to the FULL mark requires the addition of one pint of fluid. The fluid level at 75°F (24°C) should be approximately ¼ in. below the ADD mark.

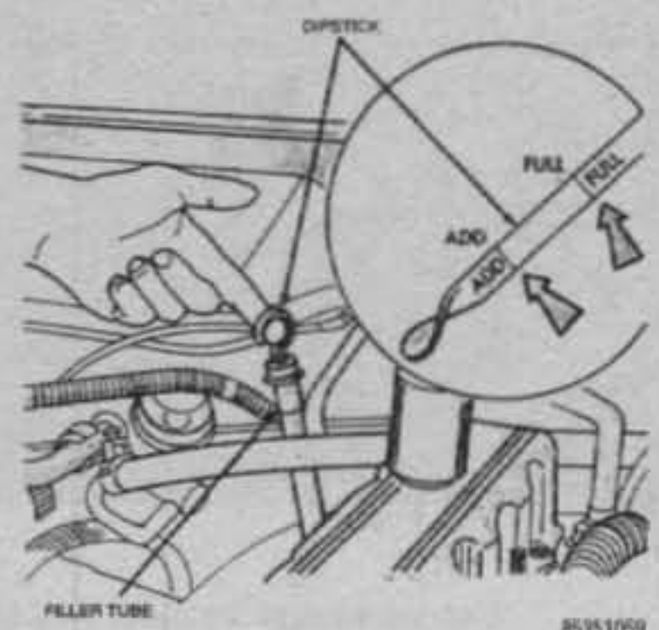

85351059

Fig. 94 Checking the automatic transmission fluid level

➡In checking the automatic transmission fluid, insert the dipstick in the filler tube with the markings toward the center of the vehicle. Also, remember that the FULL mark on the dipstick is calibrated for normal operating temperature. This temperature is obtained only after at least 15 miles (24 km) of expressway driving or the equivalent of city driving.

1. With the transmission in Park, the engine running at idle speed, the foot brake applied and the vehicle resting on level ground, move the transmission gear selector through each of the gear positions, including Reverse, allowing time for the transmission to engage. Return the shift selector to the Park position and apply the parking brake. Do not turn the engine off, but leave it running at idle speed.
2. Clean all dirt from around the transmission dipstick cap and the end of the filler tube.
3. Pull the dipstick out of the tube, wipe it off with a clean cloth, then push it back into the tube all the way, making sure it seats completely.
4. Pull the dipstick out of the tube again and read the level of the fluid on the stick. The level should be between the ADD and FULL marks. If fluid must be added, add enough fluid through the tube to raise the level to between the ADD and FULL marks. Do not overfill the transmission because this will cause foaming and loss of fluid through the vent.

➡Use only Mopar ATF plus (Type 7176) or Dexron®II transmission fluid.

DRAIN, FILTER SERVICE AND REFILL

◗ See Figures 95 thru 100

WARNING

If, when the transmission fluid level is checked, the fluid is discolored (brown instead of the normal reddish), has a burned smell or contains water, it should be changed immediately!

1. Drive the vehicle for at least 20 minutes at expressway speeds or the equivalent to raise the temperature of the fluid to its normal operating range.
2. Drain the automatic transmission fluid into an appropriate container before it has cooled. The fluid is drained by loosening the transmission pan and allowing the fluid to run out around the edges. It is best to loosen only one corner of the pan and allow most of the fluid to drain out.
3. Remove the remaining pan screws, and remove the pan and pan gasket.
4. Remove the strainer and discard it.
5. Remove the O-ring seal from the pickup pipe and discard it.
6. Install a new O-ring seal on the pickup pipe and install the new strainer and pipe assembly.
7. Thoroughly clean the bottom pan and position a new gasket on the pan mating surface.
8. Install the pan and tighten the attaching screws to 150 inch lbs. (17 Nm).
9. Pour about 5 qts. (4.73 liters) of Mopar ATF plus (Type 7176) or Dexron®II automatic transmission fluid down the dipstick tube. Make sure that the funnel, container, hose or any other item used to assist in filling the transmission is clean.
10. Start the engine with the transmission in Park. Do NOT race it. Allow the engine to idle for a few minutes.
11. After the engine has been running for a few minutes, move the selector lever through all of the gears.
12. With the selector lever in Park, check the transmission fluid level and adjust as necessary. Remember the transmission fluid must be warm when at the Full mark.

Transfer Case

◗ See Figures 101, 102 and 103

FLUID LEVEL CHECK

The transfer case should be checked in the same manner as the manual transmission. The level should be up to the filler hole. Use the same viscosity oil as in the transmission. The filler hole is on the right side. Check the oil level at the top hole. The bottom one is for draining.

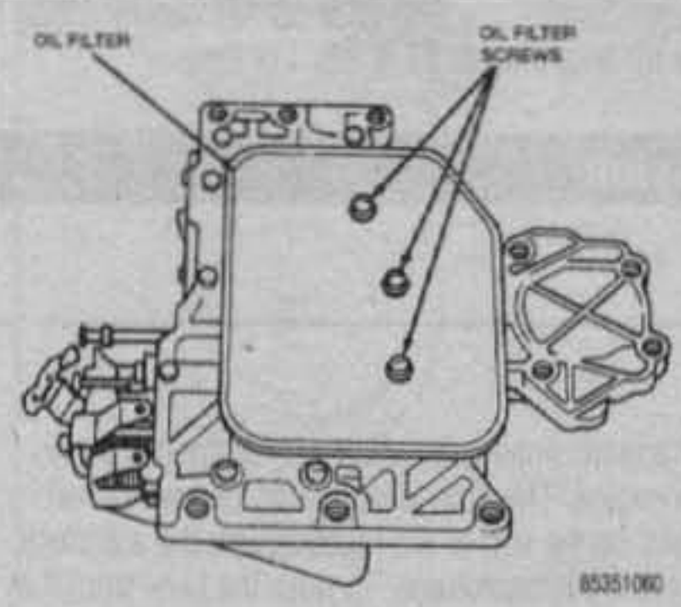

Fig. 95 Automatic transmission filter retaining screws

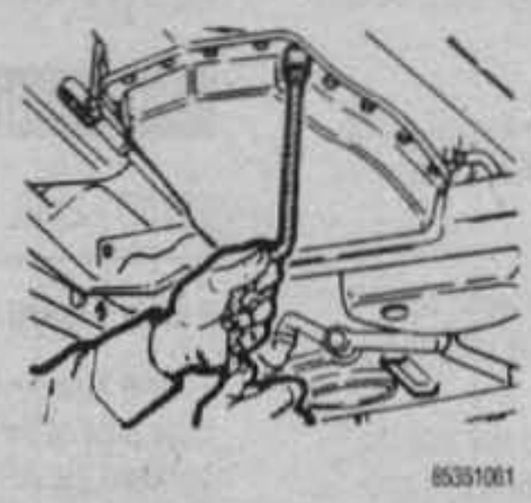

Fig. 96 Loosen the pan bolts and allow one corner of the pan to hang, so that the fluid will drain out

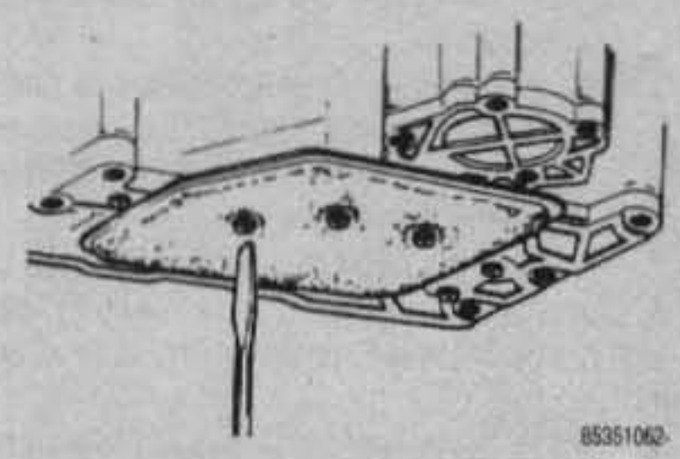

Fig. 97 Removing the automatic transmission filter retaining screws

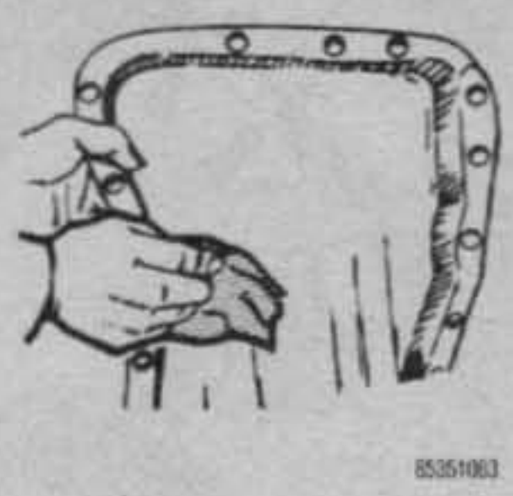

Fig. 98 Clean the pan thoroughly with safe solvent and allow it to air dry

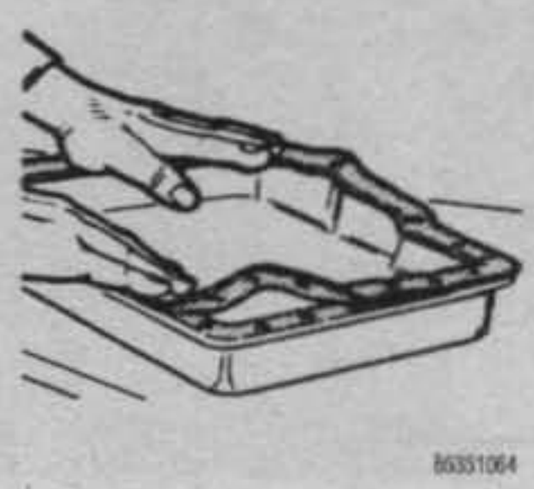

Fig. 99 Install a new pan gasket

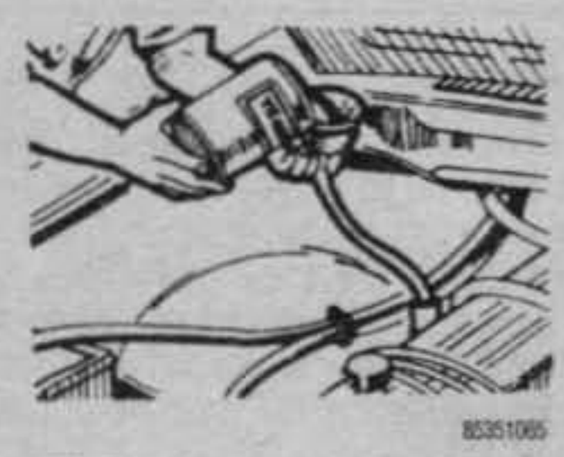

Fig. 100 Fill the transmission with the required amount of fluid, but do not overfill. Start the engine and move the gear selector through all the shift points. Check the fluid level and add as necessary

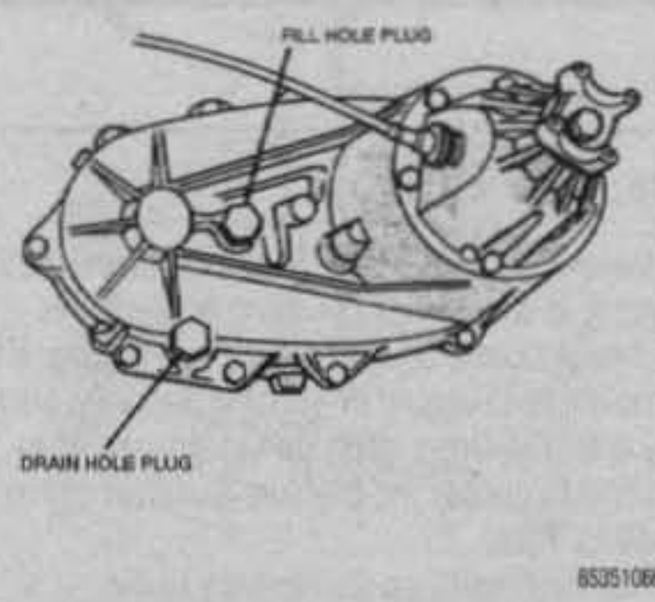

Fig. 101 Transfer case fill and drain hole plugs

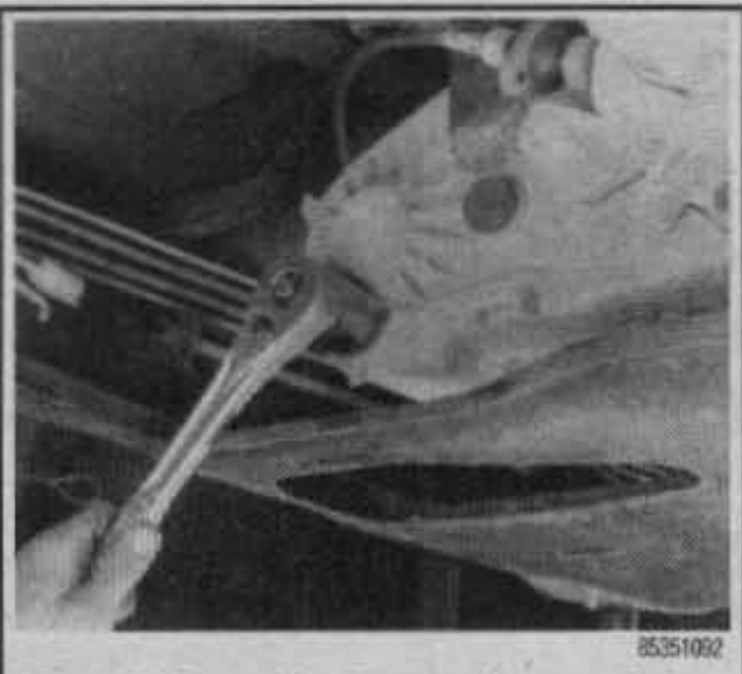

Fig. 102 Removing the transfer case drain hole plug—1991 2.5L engine shown

Fig. 103 Removing the transfer case fill plug—1991 2.5L engine shown

DRAIN AND REFILL

All transfer cases are to be serviced at the same time and in the same manner as the manual transmissions.

➡The transfer case has its own drain plug which should be opened. Do not rely on the transmission drain plug to completely drain the transfer case, even if they are interconnected.

Once the transfer case has been drained, install the drain plug. Remove the fill plug, then fill the transfer case (both the NP-207 and the NP-231 use Dexron®II transmission fluid). Install the fill plug.

Drive Axle

FLUID LEVEL CHECK

▶ See Figures 104, 105, 106 and 107

The standard front and rear axle differentials use SAE 75W-90, API Grade GL-5 gear lubricant. In Trac-Lok® axles, use a limited slip friction modifier additive with the gear lubricant.

➡When towing a trailer, use SAE 80W-140, API Grade GL-5 gear lubricant in the rear axle.

Check the level of the oil in the differential housing every 5,000 miles (8,052 km) under normal driving conditions and every 3,000 miles (4,831 km) if the vehicle is used in severe driving conditions. When you remove the filler plug, the oil level should at least ½ inch below the filler hole. If it is not, replenish the supply until it is at the correct level. Install the fill plug and tighten to 25 ft. lbs. (34 Nm).

The lubricant should be changed every 30,000 miles (48,309 km). If running in deep water, change the lubricant daily.

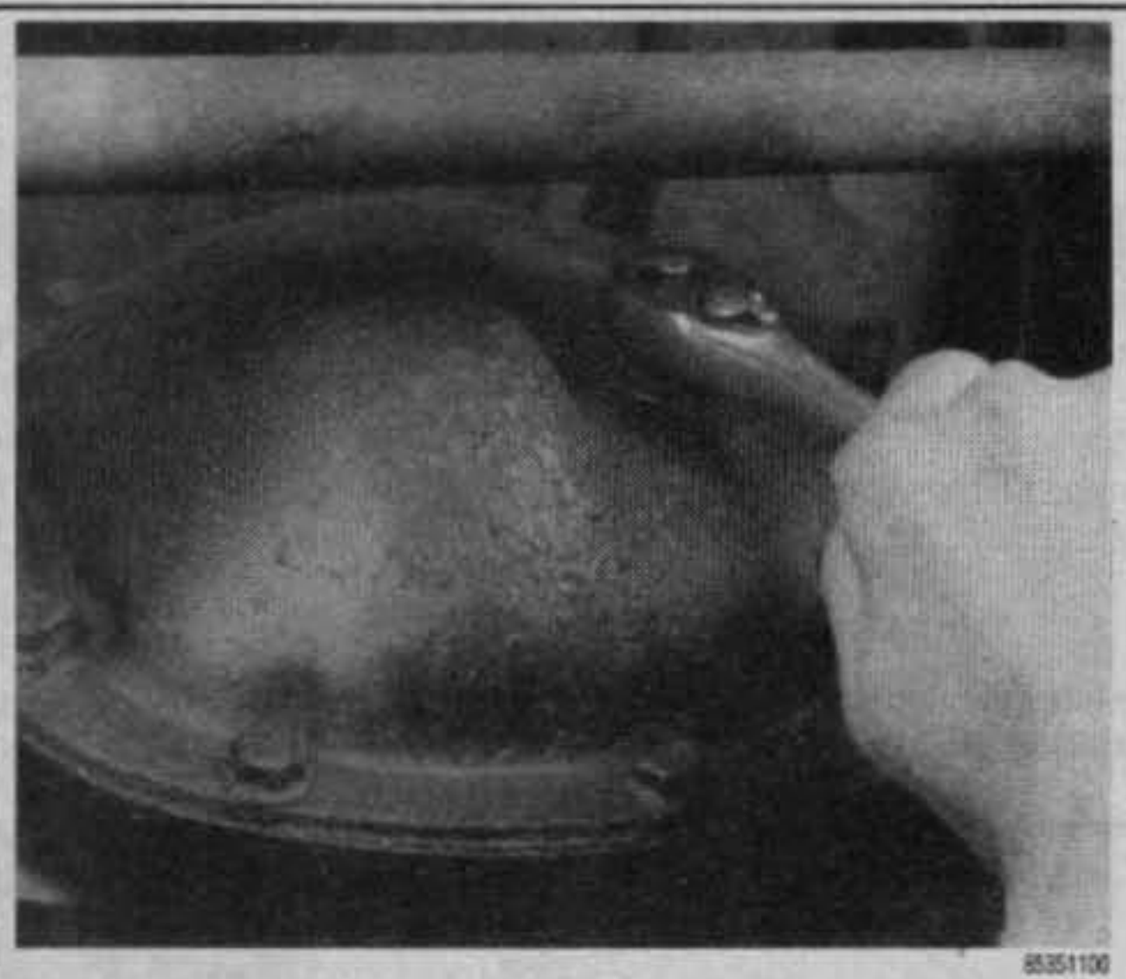

Fig. 105 Removing the front axle fill plug

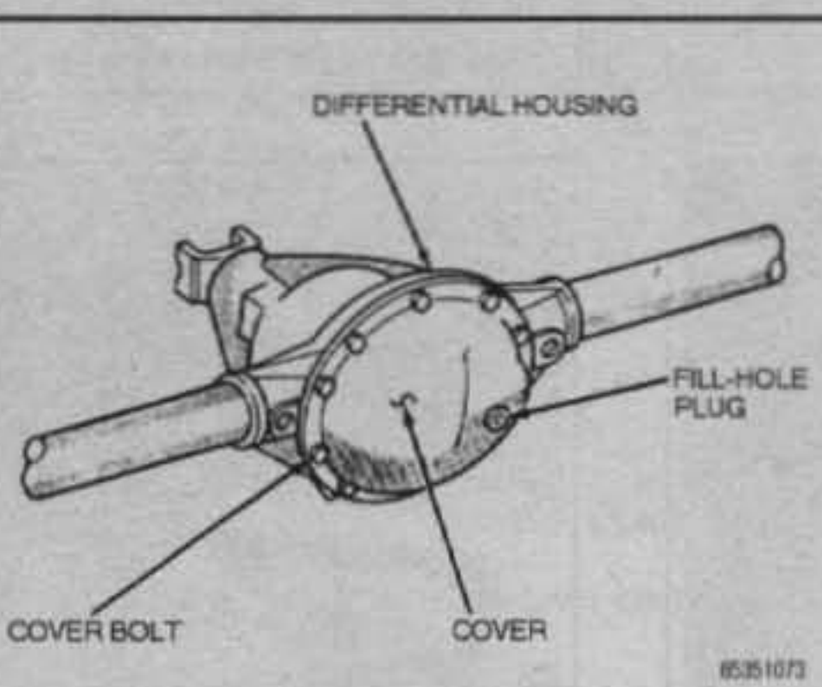

Fig. 104 Common rear axle fill hole plug locations

Fig. 106 Adding gear lubricant to the front axle

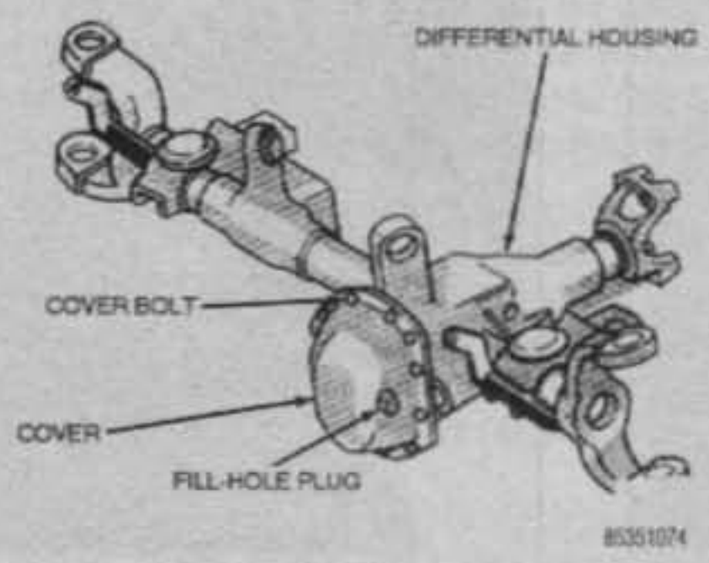

Fig. 107 Common front axle fill hole plug locations

DRAIN AND REFILL

See Figures 108 thru 113

1. Raise and safely support the vehicle.
2. Remove the axle differential housing cover and allow the lubricant to drain out into a proper container.
3. On 1987–90 models, thoroughly clean the old gasket material from the differential housing and cover and install the differential housing cover and a new gasket. Tighten the cover attaching bolts to 20 ft. lbs. (27 Nm).
4. On 1991–95 models, thoroughly clean any old RTV sealant or gasket material from the differential housing and cover and apply a bead of RTV sealant around the bolt circle on the housing and on the cover. Install the differential housing cover and tighten the cover attaching bolts to 35 ft. lbs. (47 Nm).
5. Remove the fill plug and add new lubricant to the fill hole level.
6. Replace the fill plug.

➡Trac-Lok® (limited-slip) differentials may be cleaned only by disassembling the unit and wiping with clean, lint-free rags.

Cooling System

FLUID LEVEL CHECK

See Figures 114, 115, 116, 117 and 118

The coolant level should be maintained 1½–2 in. (38–52mm) below the bottom of the filler cap when the engine is cold. Since operating temperatures reach as high as 205°F (96°C), coolant could be forced out of the radiator if it is filled too high. The radiator coolant level should be checked regularly, such as every time you fill the vehicle with gas. Never open the radiator cap of an engine that hasn't had sufficient time to cool or the pressure can blow off the cap and send out a spray of scalding liquid.

Maintain the coolant level at the level marks on the recovery bottle.

For best protection against freezing and overheating, maintain a mixture of approximately 50% water and 50% ethylene glycol or other suitable antifreeze in the cooling system. Do not mix different brands of antifreeze to avoid possible chemical damage to the cooling system.

Avoid using water that is known to have a high alkaline content or is very hard, except in emergency situations. Drain and flush the cooling system as soon as possible after using such water.

Cover the radiator cap with a thick cloth before removing it from a radiator in a vehicle that is hot. Turn the cap counterclockwise slowly until pressure can be heard escaping. Allow all pressure to escape from the radiator before completely removing the radiator cap. It is best to allow the engine to cool if possible, before removing the radiator cap.

➡Never add cold water to an overheated engine while the engine is not running.

After filling the radiator, run the engine until it reaches normal operating temperature, to make sure that the thermostat has opened and all the air is bled from the system.

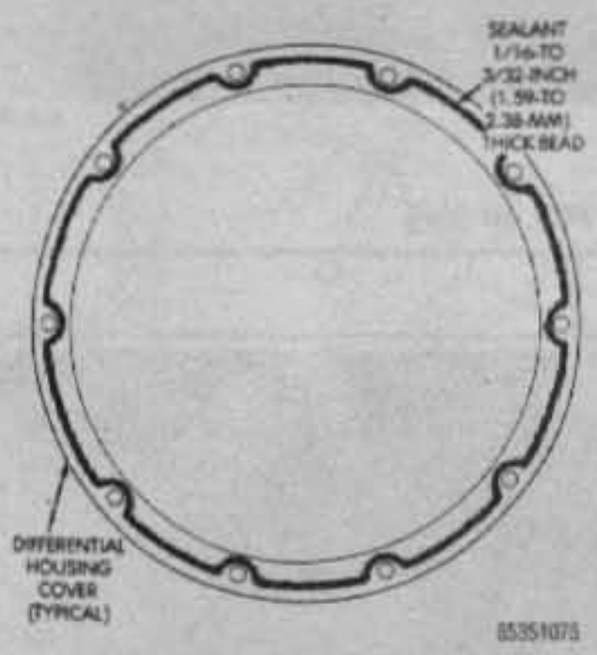

Fig. 108 Common RTV sealant application

Fig. 109 Remove the axle differential housing cover and allow the lubricant to drain out into a proper container

Fig. 110 Use a suitable prying tool to remove the axle differential housing cover

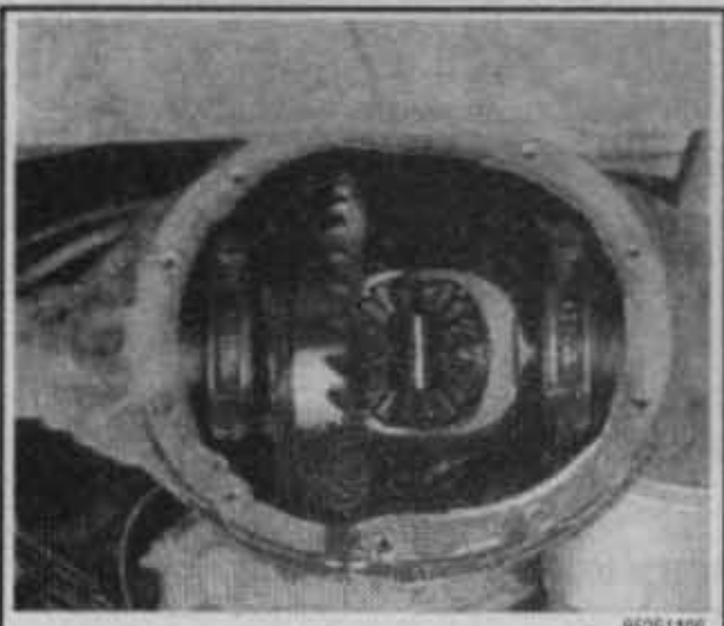

Fig. 111 The rear differential housing shown with the cover removed

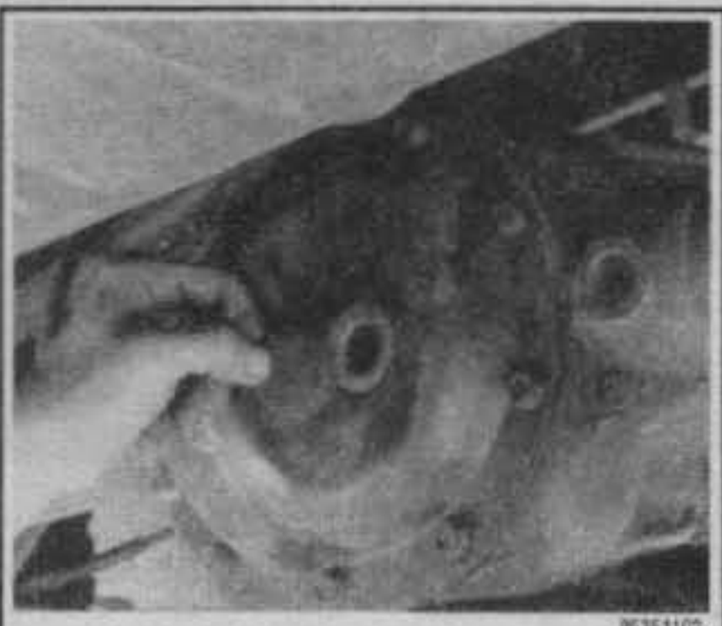

Fig. 112 Removing the rear axle fill plug

Fig. 113 Adding gear lubricant to the rear axle

85351069

Fig. 114 Coolant protection can be checked with a simple float-type tester

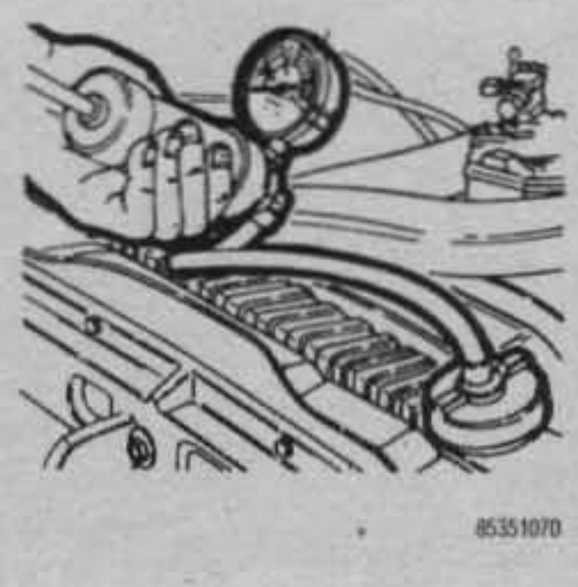

85351070

Fig. 115 The system should be pressure tested once a year

85351071

Fig. 116 Keep the radiator fins clear for maximum cooling

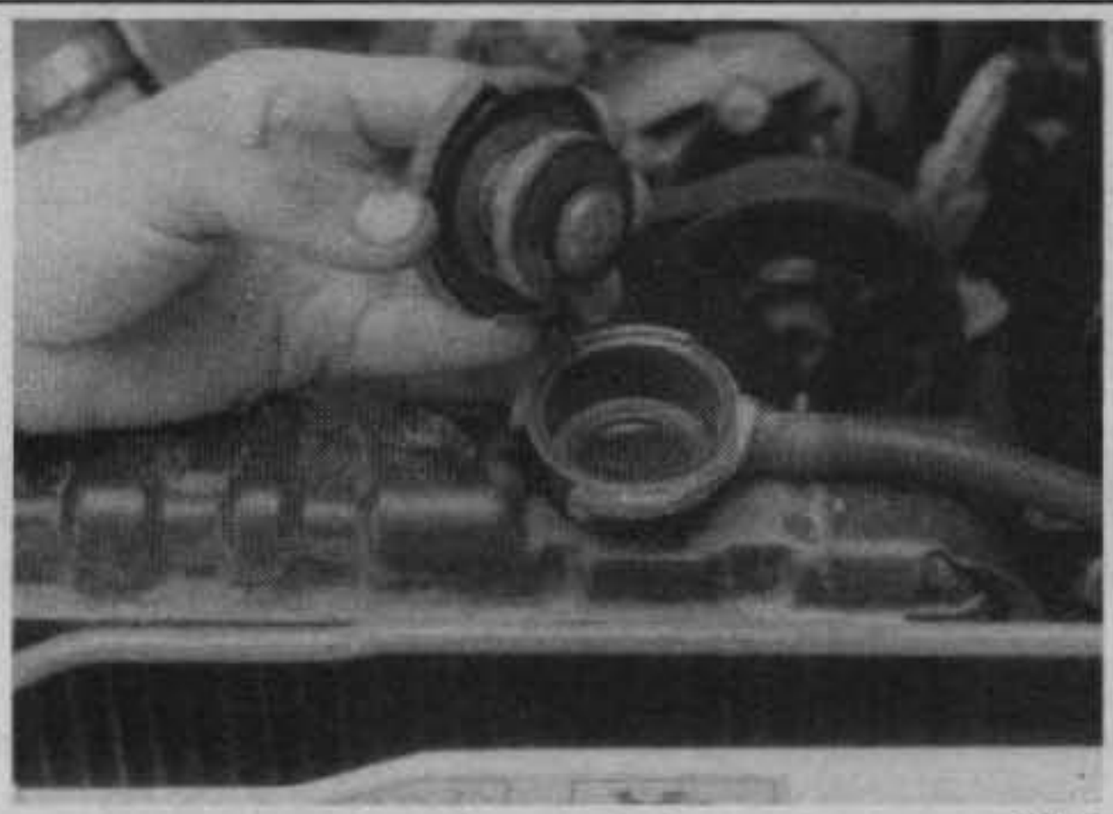

85351097

Fig. 117 The coolant level should be maintained 1½–2 in. (38–52mm) below the bottom of the filler cap when the engine is cold

DRAIN, FLUSH AND REFILL

See Figure 119

CAUTION

When draining the coolant, keep in mind that cats and dogs are attracted by ethylene glycol antifreeze, and are quite likely to drink any that is left in an uncovered container or in puddles on the ground. This will prove fatal in sufficient quantity. Always drain the coolant into a sealable container. Coolant should be reused unless it is contaminated or several years old. To drain the cooling system, allow the engine to cool down BEFORE ATTEMPTING TO REMOVE THE RADIATOR CAP. Then turn the cap until it hisses. Wait until all pressure is off the cap before removing it completely. To avoid burns and scalding, always handle a warm radiator cap with a heavy rag.

1. At the dash, set the heater TEMP control lever to the fully HOT position.
2. With the radiator cap removed, drain the radiator by loosening the petcock at the bottom of the radiator. Locate any drain plugs in the block and remove them. Flush the radiator with water until the fluid runs clear.
3. Close the petcock and install the plug(s), then refill the system with a

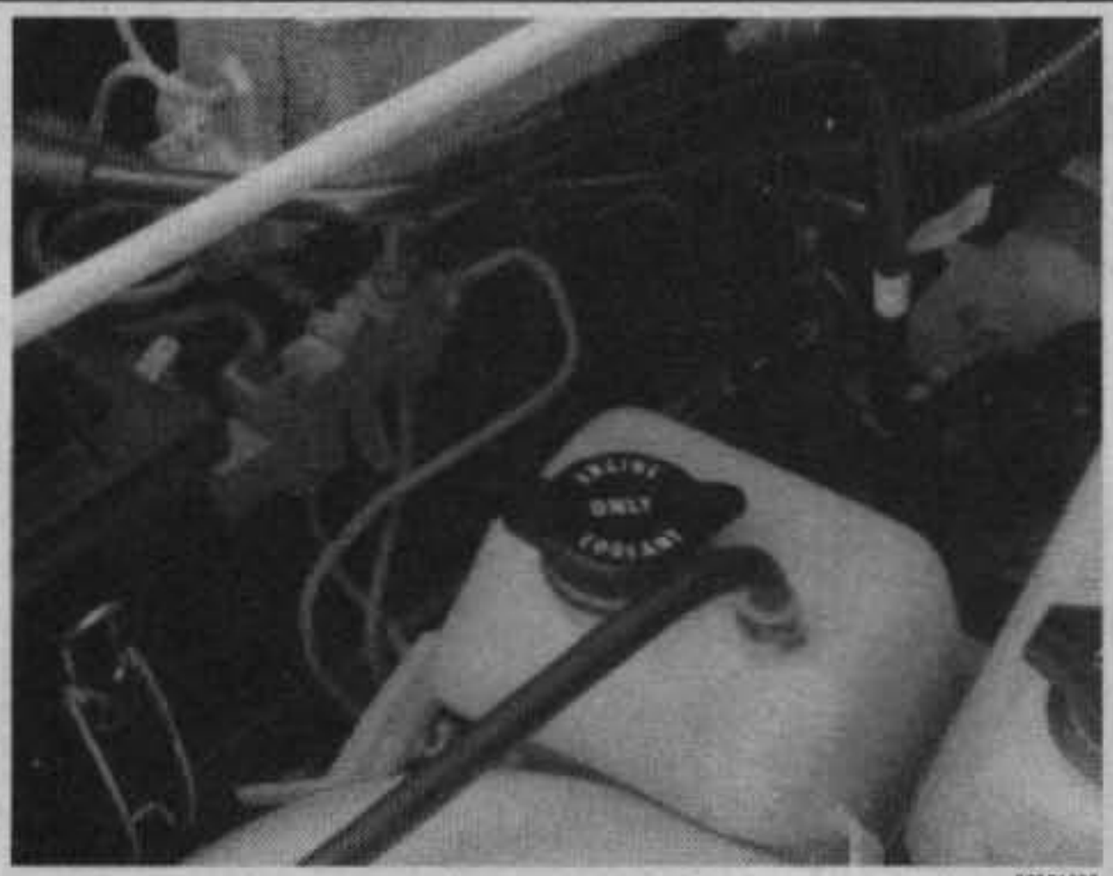

85351098

Fig. 118 Maintain the coolant level at the level marks on the recovery bottle

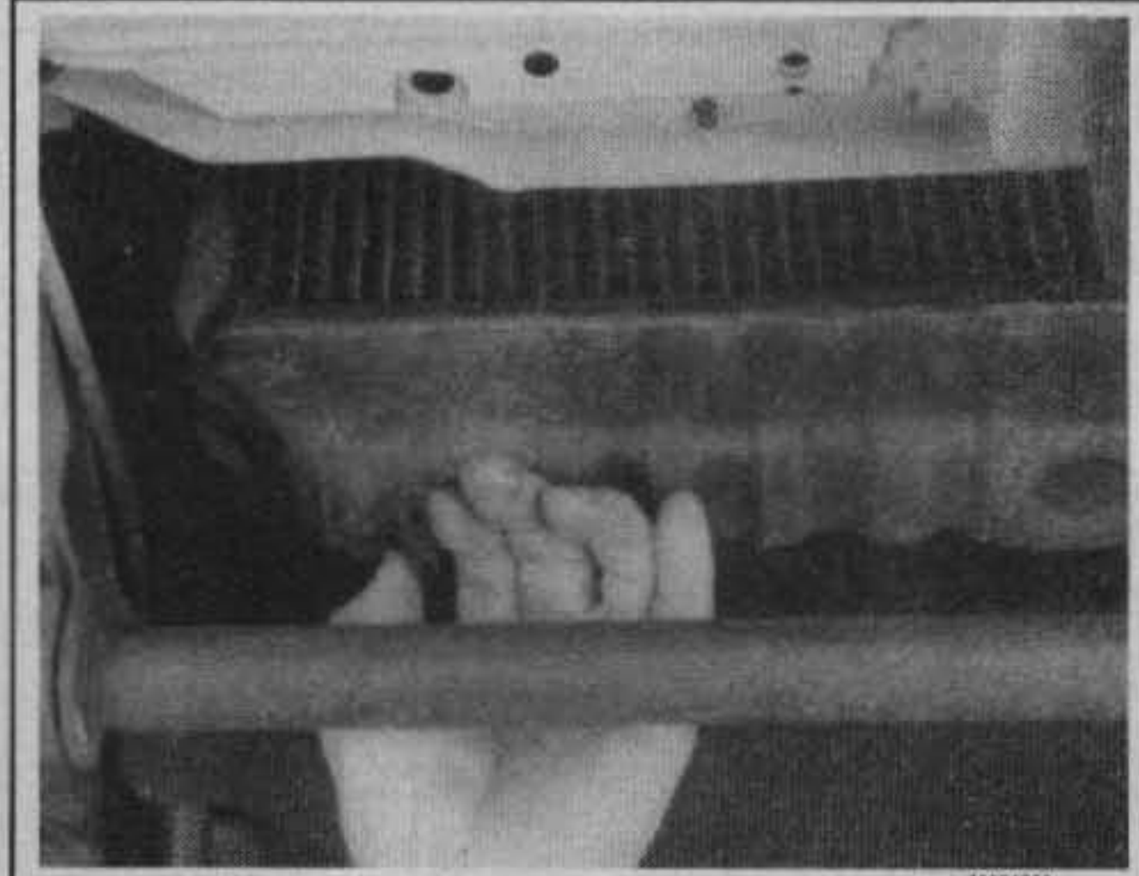

85351099

Fig. 119 Drain the radiator by loosening the petcock at the bottom of the radiator

DOOR HINGES AND HINGE CHECKS

Spray a silicone lubricant on the hinge pivot points to eliminate any binding conditions. Open and close the door several times to be sure that the lubricant is evenly and thoroughly distributed.

TAILGATE OR LIFTGATE

Spray a silicone lubricant on all of the pivot and friction surfaces to eliminate any squeaks or binds. Work the tailgate to distribute the lubricant

BODY DRAIN HOLES

Be sure that the drain holes in the doors and rocker panels are cleared of obstruction. A small screwdriver can be used to clear them of any debris.

Front Hub and Wheel Bearings

REMOVAL, PACKING AND INSTALLATION

1987–90 Models

See Figure 130

➡Only 1987–90 models have hubs which contain tapered roller bearings that can be serviced or replaced as necessary. Hubs which contain ball bearings cannot be serviced, so the complete unit must be replaced if found defective.

Before handling the bearings, there are a few things that you should remember to do and not to do:

Remember to DO the following:

- Remove all outside dirt from the housing before exposing the bearing
- Treat a used bearing as gently as you would a new one
- Work with clean tools in clean surroundings
- Use clean, dry canvas gloves, or at least clean, dry hands
- Clean solvents and flushing fluids are a must
- Use clean paper when laying out the bearings to dry
- Protect disassembled bearings from rust and dirt; cover them up
- Use clean rags to wipe the bearings
- Keep the bearings in oil-proof paper when they are to be stored or are not in use
- Clean the inside of the housing before replacing the bearing

Do NOT do the following:

- Do not work in dirty surroundings
- Do not use dirty, chipped or damaged tools
- Try not to work on wooden work benches or use wooden mallets
- Do not handle bearings with dirty or moist hands
- Do not use gasoline for cleaning; use a safe solvent instead
- Do not spin-dry bearings with compressed air (it will damage them)
- Do not spin dirty bearings

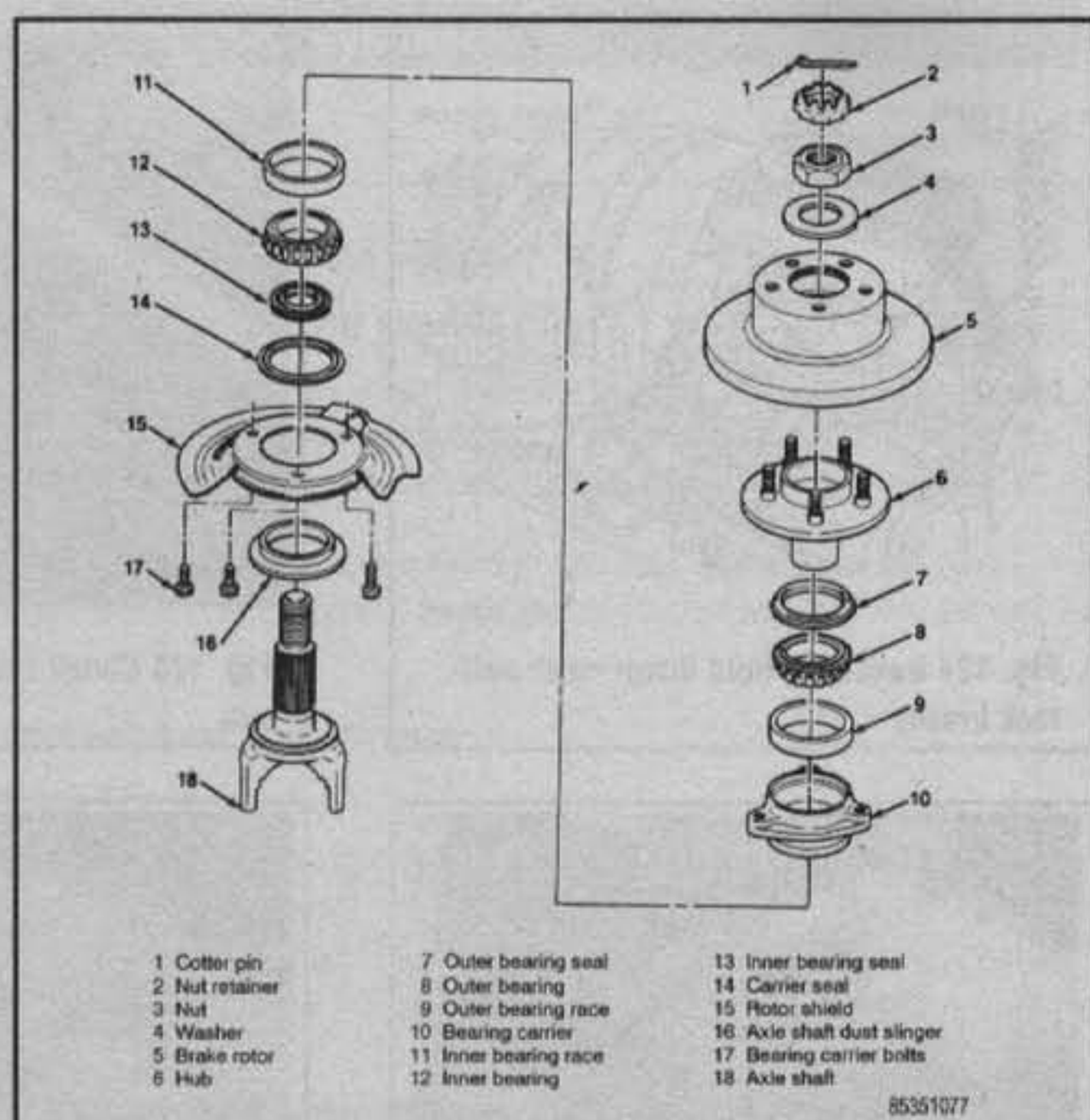

Fig. 130 Front hub and bearings—1987–90 with 4wd

- Avoid using cotton waste or dirty cloths to wipe bearings
- Try not to scratch or nick bearing surfaces
- Do not allow the bearing to come in contact with dirt or rust at any time

1. Raise and safely support the front end on jackstands.
2. Remove the wheel.
3. Dismount the caliper and suspend it out of the way.
4. Remove the rotor.
5. Remove the hub nut pin, cap and nut.
6. Remove the hub. Although the hub and bearings are usually replaced as a unit, the hub and bearing carrier may be disassembled and the bearings replaced as a set. In this case, they must first be separated with an arbor or hydraulic press. Once the hub and bearing carrier have been separated, the bearings should not be reused.

➡Sodium-based grease is not compatible with lithium-based grease. Read the package labels and be careful not to mix the two types. If there is any doubt as to the type of grease used, completely clean the old grease from the bearing and hub before replacing.

7. Pack the hub cavity and bearings with wheel bearing grease, then install the hub on the axle shaft. If the carrier was separated from the hub, make sure you install a new carrier seal and inner bearing seal.
8. Install the hub washer and nut. Torque the nut to 175 ft. lbs. (237 Nm), then install the cap and a new cotter pin.
9. Install the rotor, caliper and wheel.

TRAILER TOWING

General Recommendations

Your vehicle was primarily designed to carry passengers and cargo. It is important to remember that towing a trailer will place additional loads on your vehicles engine, drive train, steering, braking and other systems. However, if you decide to tow a trailer, using the prior equipment is a must.

Local laws may require specific equipment such as trailer brakes or fender mounted mirrors. Check your local laws.

Trailer Weight

The weight of the trailer is the most important factor. A good weight-to-horsepower ratio is about 35:1, 35 lbs. of Gross Combined Weight (GCW) for every horsepower your engine develops. Multiply the engine's rated horsepower by 35 and subtract the weight of the vehicle passengers and luggage. The number remaining is the approximate ideal maximum weight you should tow, although a numerically higher axle ratio can help compensate for heavier weight.

Hitch (Tongue) Weight

See Figure 131

Calculate the hitch weight in order to select a proper hitch. The weight of the hitch is usually 9–11% of the trailer gross weight and should be measured with the trailer loaded. Hitches fall into various categories: those that mount on the frame and rear bumper, the bolt-on type, or the weld-on distribution type used for larger trailers. Axle mounted or clamp-on bumper hitches should never be used.

Check the gross weight rating of your trailer. Tongue weight is usually figured as 10% of gross trailer weight. Therefore, a trailer with a maximum gross

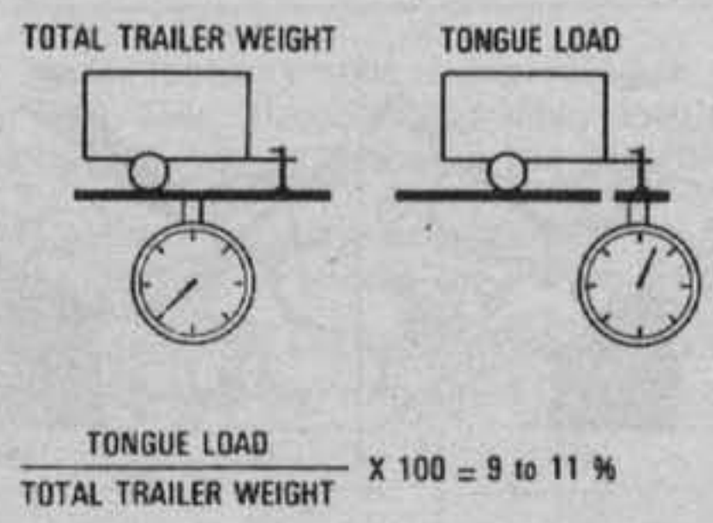

Fig. 131 Calculating proper tongue weight for your trailer

weight of 2000 lbs. will have a maximum tongue weight of 200 lbs. Class I trailers fall into this category. Class II trailers are those with a gross weight rating of 2000–3000 lbs., while Class III trailers fall into the 3500–6000 lbs. category. Class IV trailers are those over 6000 lbs. and are for use with fifth wheel trucks, only.

When you've determined the hitch that you'll need, follow the manufacturer's installation instructions, exactly, especially when it comes to fastener torques. The hitch will subjected to a lot of stress and good hitches come with hardened bolts. Never substitute an inferior bolt for a hardened bolt.

Cooling

ENGINE

Aftermarket engine oil coolers are helpful for prolonging engine oil life and reducing overall engine temperatures. Both of these factors increase engine life. While not absolutely necessary in towing Class I and some Class II trailers, they are recommended for heavier Class II and all Class III towing. Engine oil cooler systems usually consist of an adapter, screwed on in place of the oil filter, a remote filter mounting and a multi-tube, finned heat exchanger, which is mounted in front of the radiator or air conditioning condenser.

Transmission

An automatic transmission is usually recommended for trailer towing. Modern automatics have proven reliable and, of course, easy to operate, in trailer towing. The increased load of a trailer, however, causes an increase in the temperature of the transmission fluid. Heat is the worst enemy of an automatic transmission. As the temperature of the fluid increases, the life of the fluid decreases.

It is essential, therefore, that you install an automatic transmission cooler and that you pay close attention to transmission fluid changes. The cooler, which consists of a multi-tube, finned heat exchanger, is usually installed in front of the radiator or air conditioning compressor, and hooked in-line with the transmission cooler tank inlet line. Follow the cooler manufacturer's installation instructions.

TOWING THE VEHICLE

WARNING

Tow hooks are for emergency use only, to assist a vehicle stranded off-road. Do not use them for tow truck hook-up or highway towing, as damage to one or more vehicles could result.

Four-wheel drive vehicles should be towed on a flatbed or with all four wheels supported by a dolly. Either method will avoid potential damage to the transfer case. If it is not possible to tow the Jeep using one of these methods, it may be towed instead with the front end raised and the rear wheels on the ground. Ensure that the transfer case is in Neutral (N) and the transmission is in either Park (automatic transmission) or a forward gear (manual transmission).

➡When the transfer case is in the Neutral position, both axles are disengaged from the powertrain. This allows the vehicle to be towed without disconnecting the driveshafts.

WARNING

If the transfer case cannot be shifted into Neutral, either place a dolly under the wheels or disconnect the driveshaft(s) for the wheels remaining on the ground. Be sure to turn the ignition to the unlocked (OFF) position and shift the transmission into Neutral, before connecting the Jeep to the tow vehicle.

Sling-Type Towing

Be sure to maintain a minimum of 4 in. (102mm) clearance between the lower end of the vehicle and the ground.

FRONT END

If a flatbed tow truck is unavailable, and a commercial sling-type tow truck will be used, make the connections at the front of the vehicle as follows:

1. Turn the front wheels all the way to the right.

➡Tow hooks or chains must not be attached to the bumper.

2. Attach T-hooks to the slots in the front end of each frame rail.
3. Position each chain over the top of each front spring shackle bolt, then double wrap the chains.
4. Position the tow bar under the bumper.
5. Attach safety chains to the lower half of the front spring shackles.
6. Turn the ignition switch **OFF** to unlock the steering wheel.
7. Shift the transmission into either Park (automatic transmission) or a forward gear (manual transmission), then shift the transfer case into Neutral.

REAR END

➡If rear end towing is necessary, be sure to use wheel-lift equipment. Clamp the steering wheel with the front wheels in the straight ahead position; do not use the steering column lock as a substitute for the clamping device.

Flat Towing

FLATBED

➡The approach ramp angle should not exceed 15 degrees.

ON-GROUND

If your Jeep must be towed with all four wheels on the ground, follow these guidelines:

1. Mark the driveshafts and yoke flanges for alignment upon assembly.
2. Disconnect and secure (or remove) the driveshafts. Install a protective covering over the U-joints to keep them assembled and protected.
3. Cover the open ends of the transmission extension housing and the transfer case.

JACKING

See Figure 132

Scissors jacks or hydraulic jacks are recommended for all Jeep vehicles. To change a tire, place the jack beneath the spring plate under the axle, near the wheel to be changed.

Make sure that you are on level ground, that the gear selector is in Reverse (manual transmission) or Park (automatic transmission), the parking brake is set, and the tire diagonally opposite the one to be changed is blocked so that it will not roll. Loosen the lug nuts before you jack the wheel to be changed completely off the ground.

A floor jack, when properly positioned, can be used to lift your Jeep. Position the jack under the sub-frame rail or frame rail lifting locations only. After raising the vehicle, properly support it with jackstands.

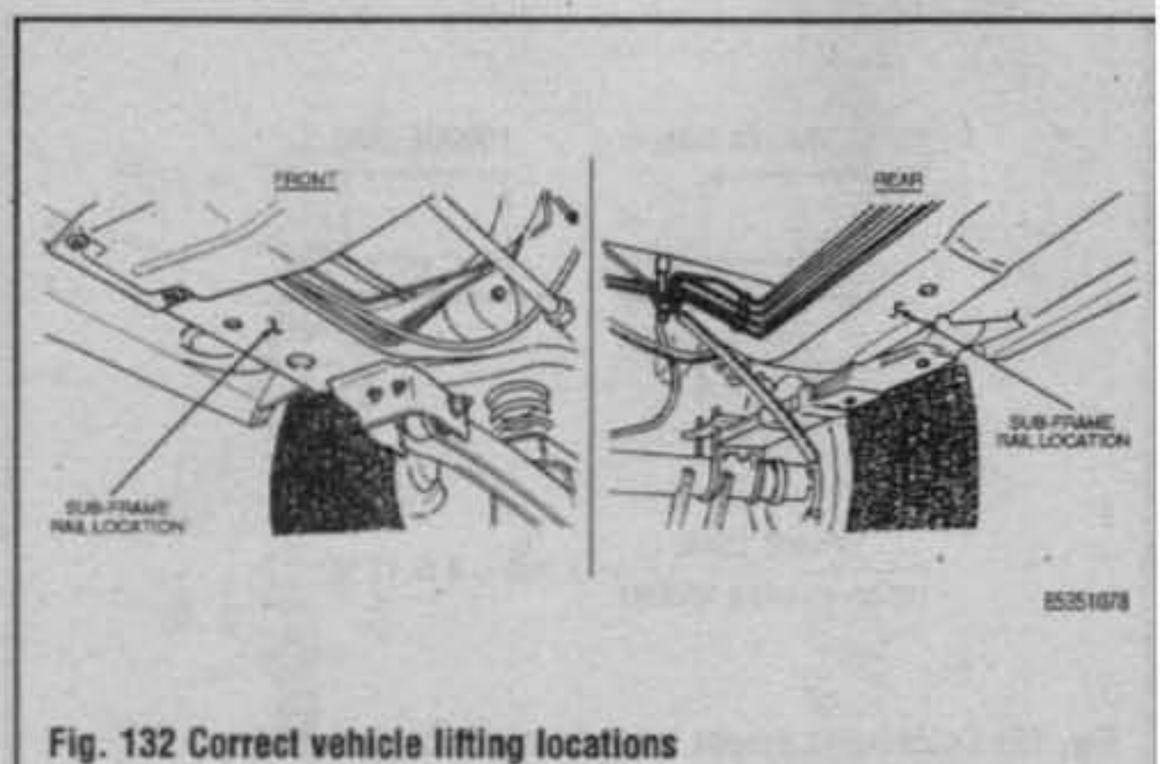

Fig. 132 Correct vehicle lifting locations

PREVENTIVE MAINTENANCE

Interval	Item	Service
Every 5,000 miles	Engine oil and filter	Change
	Steering gear	Check level
	Power steering gear	Check level
	Differentials	Check level
	Manual transmission	Check level
	Transfer case	Check level
	Automatic transmission	Check level
	Air cleaner	Change filter
	Drive belts	Check
Every 15,000 miles	All chassis lube fittings	EP chassis lube
	U-joints	EP chassis lube
	Fuel filter	Replace
	PCV valve	Replace
	Oil filler cap	Clean
	Spark plugs	Replace
Every 30,000 miles	Spark plug wires	Change
	Front wheel bearings	Clean and repack
Every 48,000 miles	Manual transmission	Change fluid
	Differentials	Change fluid
	Automatic transmission	Change fluid and filter
	Transfer case	Change fluid

85351C10

CAPACITIES

Year	Model	Engine ID/VIN	Engine Displacement Liters (cc)	Engine Crankcase with Filter	Transmission (pts.) 4-Spd	5-Spd	Auto.	Transfer Case (pts.)	Drive Axle Front (pts.)	Rear (pts.)	Fuel Tank (gal.)	Cooling System (qts.)
1987	Wrangler	H	2.5 (2458)	4.0	4.0	4.5	17.0	5.0	2.5	2.5	15.0②	9.0
		C	4.2 (4228)	6.0	3.5	—	17.0	5.0	2.5	2.5	15.0②	12.0
1988	Wrangler	H	2.5 (2458)	4.0	4.0①	4.9	17.0	5.0	2.5	2.5	15.0②	9.0
		C	4.2 (4228)	6.0	4.0①	4.9	17.0	5.0	2.5	2.5	15.0②	12.0
1989	Wrangler	E	2.5 (2458)	4.0	4.0①	4.9	17.0	3.0	2.5	2.5③	15.0②	9.0
		M	4.2 (4228)	6.0	4.0①	4.9	17.0	3.0	2.5	2.5③	15.0②	12.0
1990	Wrangler	E	2.5 (2458)	4.0	4.0①	4.9	17.0	3.0	2.5	2.5③	15.0②	9.0
		T	4.2 (4228)	6.0	4.0①	4.9	17.0	3.0	2.5	2.5③	15.0②	12.0
1991	Wrangler	P	2.5 (2458)	4.0	—	7.4④	16.0	3.0	2.5	2.5③	15.0②	9.0
		S	4.0 (3966)	6.0	—	6.7	16.0	3.0	2.5	2.5③	15.0	12.0
1992	Wrangler	P	2.5 (2458)	4.0	—	7.4④	16.0	3.0	2.5	2.5③	15.0②	9.0
		S	4.0 (3966)	6.0	—	6.7	16.0	3.0	2.5	2.5③	15.0②	10.0
1993	Wrangler	P	2.5 (2458)	4.0	—	7.4④	16.0	3.0	2.5	2.5③	15.0②	9.0
		S	4.0 (3966)	6.0	—	6.7	16.0	3.0	2.5	2.5③	15.0②	10.5
1994–95	Wrangler	P	2.5 (2458)	4.0	—	7.4④	16.0	3.0	2.5	2.5③	15.0②	9.0
		S	4.0 (3966)	6.0	—	6.7	16.0	3.0	2.5	2.5③	15.0②	10.5

① Aisin Warner: 7.4 qts.
② Optional: 20 gals.
③ Heavy Duty: 3.0 pts.
④ 2WD: 7.4 pts.

85351C03

ENGLISH TO METRIC CONVERSION: MASS (WEIGHT)

Current **mass** measurement is expressed in pounds and ounces (lbs. & ozs.). The metric unit of mass (or weight) is the kilogram (kg). Even although this table does not show conversion of masses (weights) larger than 15 lbs, it is easy to calculate larger units by following the data immediately below.

To convert ounces (oz.) to grams (g): multiply th number of ozs. by 28
To convert grams (g) to ounces (oz.): multiply the number of grams by .035

To convert pounds (lbs.) to kilograms (kg): multiply the number of lbs. by .45
To convert kilograms (kg) to pounds (lbs.): multiply the number of kilograms by 2.2

lbs	kg	lbs	kg	oz	kg	oz	kg
0.1	0.04	0.9	0.41	0.1	0.003	0.9	0.024
0.2	0.09	1	0.4	0.2	0.005	1	0.03
0.3	0.14	2	0.9	0.3	0.008	2	0.06
0.4	0.18	3	1.4	0.4	0.011	3	0.08
0.5	0.23	4	1.8	0.5	0.014	4	0.11
0.6	0.27	5	2.3	0.6	0.017	5	0.14
0.7	0.32	10	4.5	0.7	0.020	10	0.28
0.8	0.36	15	6.8	0.8	0.023	15	0.42

ENGLISH TO METRIC CONVERSION: TEMPERATURE

To convert Fahrenheit (°F) to Celsius (°C): take number of °F and subtract 32; multiply result by 5; divide result by 9
To convert Celsius (°C) to Fahrenheit (°F): take number of °C and multiply by 9; divide result by 5; add 32 to total

Fahrenheit (F)		Celsius (C)		Fahrenheit (F)		Celsius (C)		Fahrenheit (F)		Celsius (C)	
°F	°C	°C	°F	°F	°C	°C	°F	°F	°C	°C	°F
−40	−40	−38	−36.4	80	26.7	18	64.4	215	101.7	80	176
−35	−37.2	−36	−32.8	85	29.4	20	68	220	104.4	85	185
−30	−34.4	−34	−29.2	90	32.2	22	71.6	225	107.2	90	194
−25	−31.7	−32	−25.6	95	35.0	24	75.2	230	110.0	95	202
−20	−28.9	−30	−22	100	37.8	26	78.8	235	112.8	100	212
−15	−26.1	−28	−18.4	105	40.6	28	82.4	240	115.6	105	221
−10	−23.3	−26	−14.8	110	43.3	30	86	245	118.3	110	230
−5	−20.6	−24	−11.2	115	46.1	32	89.6	250	121.1	115	239
0	−17.8	−22	−7.6	120	48.9	34	93.2	255	123.9	120	248
1	−17.2	−20	−4	125	51.7	36	96.8	260	126.6	125	257
2	−16.7	−18	−0.4	130	54.4	38	100.4	265	129.4	130	266
3	−16.1	−16	3.2	135	57.2	40	104	270	132.2	135	275
4	−15.6	−14	6.8	140	60.0	42	107.6	275	135.0	140	284
5	−15.0	−12	10.4	145	62.8	44	112.2	280	137.8	145	293
10	−12.2	−10	14	150	65.6	46	114.8	285	140.6	150	302
15	−9.4	−8	17.6	155	68.3	48	118.4	290	143.3	155	311
20	−6.7	−6	21.2	160	71.1	50	122	295	146.1	160	320
25	−3.9	−4	24.8	165	73.9	52	125.6	300	148.9	165	329
30	−1.1	−2	28.4	170	76.7	54	129.2	305	151.7	170	338
35	1.7	0	32	175	79.4	56	132.8	310	154.4	175	347
40	4.4	2	35.6	180	82.2	58	136.4	315	157.2	180	356
45	7.2	4	39.2	185	85.0	60	140	320	160.0	185	365
50	10.0	6	42.8	190	87.8	62	143.6	325	162.8	190	374
55	12.8	8	46.4	195	90.6	64	147.2	330	165.6	195	383
60	15.6	10	50	200	93.3	66	150.8	335	168.3	200	392
65	18.3	12	53.6	205	96.1	68	154.4	340	171.1	205	401
70	21.1	14	57.2	210	98.9	70	158	345	173.9	210	410
75	23.9	16	60.8	212	100.0	75	167	350	176.7	215	414

ENGLISH TO METRIC CONVERSION: LENGTH

To convert inches (ins.) to millimeters (mm): multiply number of inches by 25.4

To convert millimeters (mm) to inches (ins.): multiply number of millimeters by .04

Inches		Decimals	Millimeters	Inches to millimeters inches	mm
	1/64	0.051625	0.3969	0.0001	0.00254
1/32		0.03125	0.7937	0.0002	0.00508
	3/64	0.046875	1.1906	0.0003	0.00762
1/16		0.0625	1.5875	0.0004	0.01016
	5/64	0.078125	1.9844	0.0005	0.01270
3/32		0.09375	2.3812	0.0006	0.01524
	7/64	0.109375	2.7781	0.0007	0.01778
1/8		0.125	3.1750	0.0008	0.02032
	9/64	0.140625	3.5719	0.0009	0.02286
5/32		0.15625	3.9687	0.001	0.0254
	11/64	0.171875	4.3656	0.002	0.0508
3/16		0.1875	4.7625	0.003	0.0762
	13/64	0.203125	5.1594	0.004	0.1016
7/32		0.21875	5.5562	0.005	0.1270
	15/64	0.234375	5.9531	0.006	0.1524
1/4		0.25	6.3500	0.007	0.1778
	17/64	0.265625	6.7469	0.008	0.2032
9/32		0.28125	7.1437	0.009	0.2286
	19/64	0.296875	7.5406	0.01	0.254
5/16		0.3125	7.9375	0.02	0.508
	21/64	0.328125	8.3344	0.03	0.762
11/32		0.34375	8.7312	0.04	1.016
	23/64	0.359375	9.1281	0.05	1.270
3/8		0.375	9.5250	0.06	1.524
	25/64	0.390625	9.9219	0.07	1.778
13/32		0.40625	10.3187	0.08	2.032
	27/64	0.421875	10.7156	0.09	2.286
7/16		0.4375	11.1125	0.1	2.54
	29/64	0.453125	11.5094	0.2	5.08
15/32		0.46875	11.9062	0.3	7.62
	31/64	0.484375	12.3031	0.4	10.16
1/2		0.5	12.7000	0.5	12.70
	33/64	0.515625	13.0969	0.6	15.24
17/32		0.53125	13.4937	0.7	17.78
	35/64	0.546875	13.8906	0.8	20.32
9/16		0.5625	14.2875	0.9	22.86
	37/64	0.578125	14.6844	1	25.4
19/32		0.59375	15.0812	2	50.8
	39/64	0.609375	15.4781	3	76.2
5/8		0.625	15.8750	4	101.6
	41/64	0.640625	16.2719	5	127.0
21/32		0.65625	16.6687	6	152.4
	43/64	0.671875	17.0656	7	177.8
11/16		0.6875	17.4625	8	203.2
	45/64	0.703125	17.8594	9	228.6
23/32		0.71875	18.2562	10	254.0
	47/64	0.734375	18.6531	11	279.4
3/4		0.75	19.0500	12	304.8
	49/64	0.765625	19.4469	13	330.2
25/32		0.78125	19.8437	14	355.6
	51/64	0.796875	20.2406	15	381.0
13/16		0.8125	20.6375	16	406.4
	53/64	0.828125	21.0344	17	431.8
27/32		0.84375	21.4312	18	457.2
	55/64	0.859375	21.8281	19	482.6
7/8		0.875	22.2250	20	508.0
	57/64	0.890625	22.6219	21	533.4
29/32		0.90625	23.0187	22	558.8
	59/64	0.921875	23.4156	23	584.2
15/16		0.9375	23.8125	24	609.6
	61/64	0.953125	24.2094	25	635.0
31/32		0.96875	24.6062	26	660.4
	63/64	0.984375	25.0031	27	690.6

ENGLISH TO METRIC CONVERSION: TORQUE

To convert foot-pounds (ft. lbs.) to Newton-meters: multiply the number of ft. lbs. by 1.3

To convert inch-pounds (in. lbs.) to Newton-meters: multiply the number of in. lbs. by .11

in lbs	N-m	in lbs	N-m	in lbs	N-m	in lbs	N-m	in lbs	N-m
0.1	0.01	1	0.11	10	1.13	19	2.15	28	3.16
0.2	0.02	2	0.23	11	1.24	20	2.26	29	3.28
0.3	0.03	3	0.34	12	1.36	21	2.37	30	3.39
0.4	0.04	4	0.45	13	1.47	22	2.49	31	3.50
0.5	0.06	5	0.56	14	1.58	23	2.60	32	3.62
0.6	0.07	6	0.68	15	1.70	24	2.71	33	3.73
0.7	0.08	7	0.78	16	1.81	25	2.82	34	3.84
0.8	0.09	8	0.90	17	1.92	26	2.94	35	3.95
0.9	0.10	9	1.02	18	2.03	27	3.05	36	4.0

ENGLISH TO METRIC CONVERSION: TORQUE

Torque is now expressed as either foot-pounds (ft./lbs.) or inch-pounds (in./lbs.). The metric measurement unit for torque is the Newton-meter (Nm). This unit—the Nm—will be used for all SI metric torque references, both the present ft./lbs. and in./lbs.

ft lbs	N-m	ft lbs	N-m	ft lbs	N-m	ft lbs	N-m
0.1	0.1	33	44.7	74	100.3	115	155.9
0.2	0.3	34	46.1	75	101.7	116	157.3
0.3	0.4	35	47.4	76	103.0	117	158.6
0.4	0.5	36	48.8	77	104.4	118	160.0
0.5	0.7	37	50.7	78	105.8	119	161.3
0.6	0.8	38	51.5	79	107.1	120	162.7
0.7	1.0	39	52.9	80	108.5	121	164.0
0.8	1.1	40	54.2	81	109.8	122	165.4
0.9	1.2	41	55.6	82	111.2	123	166.8
1	1.3	42	56.9	83	112.5	124	168.1
2	2.7	43	58.3	84	113.9	125	169.5
3	4.1	44	59.7	85	115.2	126	170.8
4	5.4	45	61.0	86	116.6	127	172.2
5	6.8	46	62.4	87	118.0	128	173.5
6	8.1	47	63.7	88	119.3	129	174.9
7	9.5	48	65.1	89	120.7	130	176.2
8	10.8	49	66.4	90	122.0	131	177.6
9	12.2	50	67.8	91	123.4	132	179.0
10	13.6	51	69.2	92	124.7	133	180.3
11	14.9	52	70.5	93	126.1	134	181.7
12	16.3	53	71.9	94	127.4	135	183.0
13	17.6	54	73.2	95	128.8	136	184.4
14	18.9	55	74.6	96	130.2	137	185.7
15	20.3	56	75.9	97	131.5	138	187.1
16	21.7	57	77.3	98	132.9	139	188.5
17	23.0	58	78.6	99	134.2	140	189.8
18	24.4	59	80.0	100	135.6	141	191.2
19	25.8	60	81.4	101	136.9	142	192.5
20	27.1	61	82.7	102	138.3	143	193.9
21	28.5	62	84.1	103	139.6	144	195.2
22	29.8	63	85.4	104	141.0	145	196.6
23	31.2	64	86.8	105	142.4	146	198.0
24	32.5	65	88.1	106	143.7	147	199.3
25	33.9	66	89.5	107	145.1	148	200.7
26	35.2	67	90.8	108	146.4	149	202.0
27	36.6	68	92.2	109	147.8	150	203.4
28	38.0	69	93.6	110	149.1	151	204.7
29	39.3	70	94.9	111	150.5	152	206.1
30	40.7	71	96.3	112	151.8	153	207.4
31	42.0	72	97.6	113	153.2	154	208.8
32	43.4	73	99.0	114	154.6	155	210.2

TCCS1C03

ENGLISH TO METRIC CONVERSION: FORCE

Force is presently measured in pounds (lbs.). This type of measurement is used to measure spring pressure, specifically how many pounds it takes to compress a spring. Our present force unit (the pound) will be replaced in SI metric measurements by the Newton (N). This term will eventually see use in specifications for electric motor brush spring pressures, valve spring pressures, etc.

To convert pounds (lbs.) to Newton (N): multiply the number of lbs. by 4.45

lbs	N	lbs	N	lbs	N	oz	N
0.01	0.04	21	93.4	59	262.4	1	0.3
0.02	0.09	22	97.9	60	266.9	2	0.6
0.03	0.13	23	102.3	61	271.3	3	0.8
0.04	0.18	24	106.8	62	275.8	4	1.1
0.05	0.22	25	111.2	63	280.2	5	1.4
0.06	0.27	26	115.6	64	284.6	6	1.7
0.07	0.31	27	120.1	65	289.1	7	2.0
0.08	0.36	28	124.6	66	293.6	8	2.2
0.09	0.40	29	129.0	67	298.0	9	2.5
0.1	0.4	30	133.4	68	302.5	10	2.8
0.2	0.9	31	137.9	69	306.9	11	3.1
0.3	1.3	32	142.3	70	311.4	12	3.3
0.4	1.8	33	146.8	71	315.8	13	3.6
0.5	2.2	34	151.2	72	320.3	14	3.9
0.6	2.7	35	155.7	73	324.7	15	4.2
0.7	3.1	36	160.1	74	329.2	16	4.4
0.8	3.6	37	164.6	75	333.6	17	4.7
0.9	4.0	38	169.0	76	338.1	18	5.0
1	4.4	39	173.5	77	342.5	19	5.3
2	8.9	40	177.9	78	347.0	20	5.6
3	13.4	41	182.4	79	351.4	21	5.8
4	17.8	42	186.8	80	355.9	22	6.1
5	22.2	43	191.3	81	360.3	23	6.4
6	26.7	44	195.7	82	364.8	24	6.7
7	31.1	45	200.2	83	369.2	25	7.0
8	35.6	46	204.6	84	373.6	26	7.2
9	40.0	47	209.1	85	378.1	27	7.5
10	44.5	48	213.5	86	382.6	28	7.8
11	48.9	49	218.0	87	387.0	29	8.1
12	53.4	50	224.4	88	391.4	30	8.3
13	57.8	51	226.9	89	395.9	31	8.6
14	62.3	52	231.3	90	400.3	32	8.9
15	66.7	53	235.8	91	404.8	33	9.2
16	71.2	54	240.2	92	409.2	34	9.4
17	75.6	55	244.6	93	413.7	35	9.7
18	80.1	56	249.1	94	418.1	36	10.0
19	84.5	57	253.6	95	422.6	37	10.3
20	89.0	58	258.0	96	427.0	38	10.6

TDCS1C04

TUNE-UP PROCEDURES 2-2
SPARK PLUGS 2-2
SPARK PLUG HEAT RANGE 2-2
REMOVAL 2-2
INSPECTION & GAPPING 2-2
INSTALLATION 2-4
CHECKING AND REPLACING SPARK PLUG CABLES 2-4
FIRING ORDERS 2-4
ELECTRONIC IGNITION 2-4
SOLID STATE IGNITION (SSI) SYSTEM 2-4
DIAGNOSIS & TESTING 2-5
AMERICAN MOTORS SOLID STATE (RENIX) IGNITION SYSTEM 2-5
DIAGNOSIS & TESTING 2-5
SINGLE BOARD ENGINE CONTROLLER (SBEC II) SYSTEM 2-6
DIAGNOSIS & TESTING 2-6
POWERTRAIN CONTROL MODULE (PCM) SYSTEM 2-6
DIAGNOSIS 2-6
IGNITION TIMING 2-7
TIMING ADJUSTMENT 2-7
PROCEDURE 2-7
IDLE ADJUSTMENTS 2-7
4.2L ENGINE 2-7
2.5L AND 4.0L ENGINES 2-8
VALVE LASH 2-8
SPECIFICATIONS CHART
GASOLINE ENGINE TUNE-UP SPECIFICATIONS 2-8
TROUBLESHOOTING CHARTS
ENGINE PERFORMANCE 2-9

2

ENGINE PERFORMANCE AND TUNE-UP

TUNE-UP PROCEDURES 2-2
FIRING ORDERS 2-4
ELECTRONIC IGNITION 2-4
IGNITION TIMING 2-7
IDLE ADJUSTMENTS 2-7
VALVE LASH 2-8

TUNE-UP PROCEDURES

In order to extract the full measure of performance and economy from your engine it is essential that it be properly tuned at regular intervals. A regular tune-up will keep your vehicle's engine running smoothly and will prevent the annoying minor breakdowns or poor performance associated with an poorly tuned engine.

It is assumed that the routine maintenance described in Section 1 has been kept up, as this will have a decided effect on the results of a tune-up. All of the applicable steps of a tune-up should be followed in order, as the result is a cumulative one.

If the specifications on the tune-up sticker in the engine compartment disagree with the Tune-Up Specifications chart in this section, the figures on the sticker must be used. The sticker often reflects changes made during the production run.

Spark Plugs

Spark plugs ignite the air and fuel mixture in the cylinder as the piston reaches the top of the compression stroke. The controlled explosion that results forces the piston down, turning the crankshaft and the rest of the drive train.

The average life of a spark plug is dependent on a number of factors; the mechanical condition of the engine; the type of fuel; driving conditions; and the driver.

When you remove the spark plugs, check their condition. They are a good indicator of engine condition.

A small deposit of light tan or gray material on a spark plug that has been used for any period of time is to be considered normal. Additives in unleaded fuels may give a number of unusual color indications; for instance, MMT (a manganese anti-knock compound) will cause rust red deposits.

The gap between the center electrode and the side or ground electrode can be expected to increase not more than 0.001 in. (0.025mm) every 1,000 miles under normal conditions.

When a spark plug is functioning normally or, more accurately, when the plug is installed in an engine that is functioning properly, the plugs can be taken out, cleaned, regapped, and reinstalled in the engine without doing the engine any harm.

When, and if, a plug fouls and begins to misfire, you will have to investigate, correct the cause of the fouling, then either clean or replace the plug.

There are several reasons why a spark plug will foul and you can learn which reason by just looking at the plug. The two most common problems are oil fouling and pre-ignition/detonation.

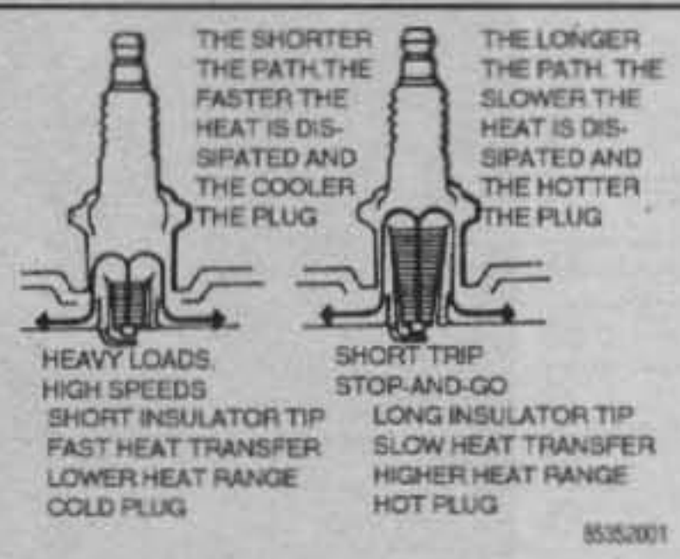

Fig. 1 Spark plug heat range

Oil fouling is easily noticed as dark, wet oily deposits on the plug's electrodes. Oil fouling is caused by internal engine problems, the most common of which are worn valve seals or guides and worn or damaged piston rings. These problems can be corrected only by engine repairs.

Pre-ignition or detonation problems are characterized by extensive burning and/or damage to the plug's electrodes. The problem is caused by incorrect ignition timing or faulty spark control. Check the timing and/or diagnose the spark control system.

SPARK PLUG HEAT RANGE

See Figure 1

Spark plug heat range is the ability of the plug to dissipate heat. The longer the insulator (or the farther it extends into the engine), the hotter the plug will operate; the shorter the insulator the cooler it will operate. A plug that absorbs little heat and remains too cool will quickly accumulate deposits of oil or carbon since it is not hot enough to burn them off. This leads to plug fouling and consequently to misfiring. A plug that absorbs too much heat will have no deposits, but, due to the excessive heat, the electrodes will burn away quickly and in some instances, preignition may result. Preignition takes place when plug tips get so hot that they glow sufficiently to ignite the fuel/air mixture before the actual spark occurs. This early ignition will usually cause a pinging during low speeds and heavy loads.

The general rule of thumb for choosing the correct heat range when picking a spark plug is: if most of your driving is long distance, high speed travel, use a colder plug; if most of your driving is stop and go, use a hotter plug. Original equipment plugs are compromise plugs, but most people never have occasion to change their plugs from the factory-recommended heat range.

REMOVAL

See Figures 2, 3 and 4

1. Remove the wires one at a time and number them so they won't become crossed during installation.
2. Remove the wire from the end of the spark plug by grasping the wire by the rubber boot. If the boot sticks to the plug, remove it by twisting and pulling at the same time. Do not pull the wire itself or you will most certainly damage the core, or tear the connector.
3. Use a spark plug socket to loosen all of the plugs about two turns.
4. If compressed air is available, blow off the area around the spark plug holes. Otherwise, use a rag or a brush to clean the area. Be careful not to allow any foreign material to drop into the spark plug holes.
5. Remove the plugs by unscrewing them the rest of the way from the engine.

INSPECTION & GAPPING

See Figures 5, 6, 7 and 8

Check the plugs for deposits and wear. If they are not going to be replaced, clean the plugs thoroughly. Remember that any kind of deposit will decrease

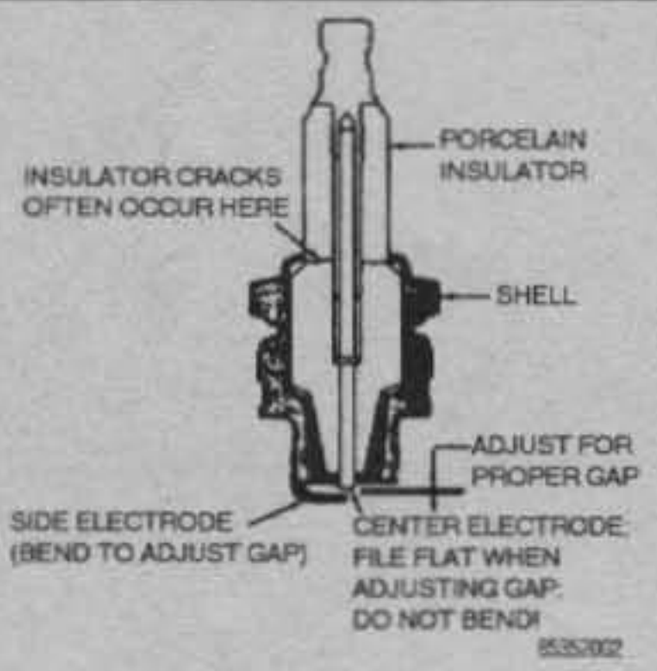

Fig. 2 Cross-section of a spark plug

Fig. 3 When disconnecting the spark plug wires BE VERY careful not to touch the exhaust manifolds which are often still hot if the engine was run recently

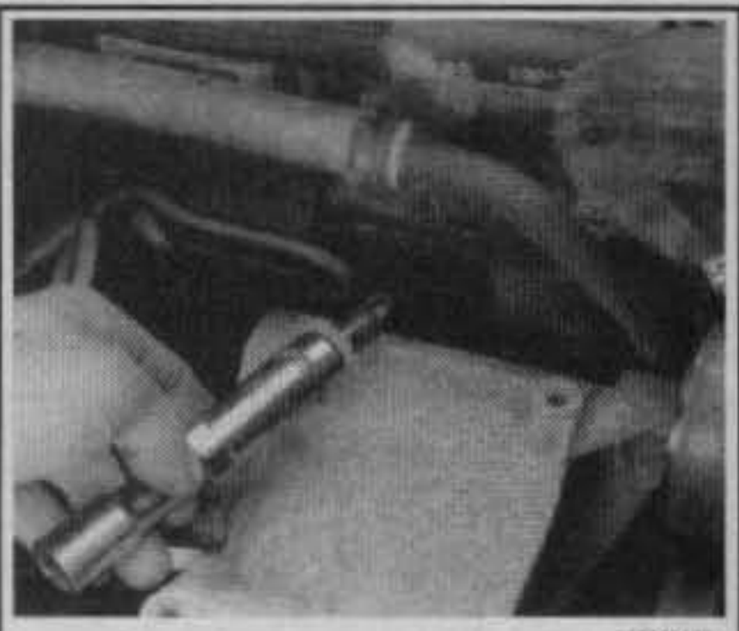

Fig. 4 Loosen, unthread and remove the spark plug using a socket and extension

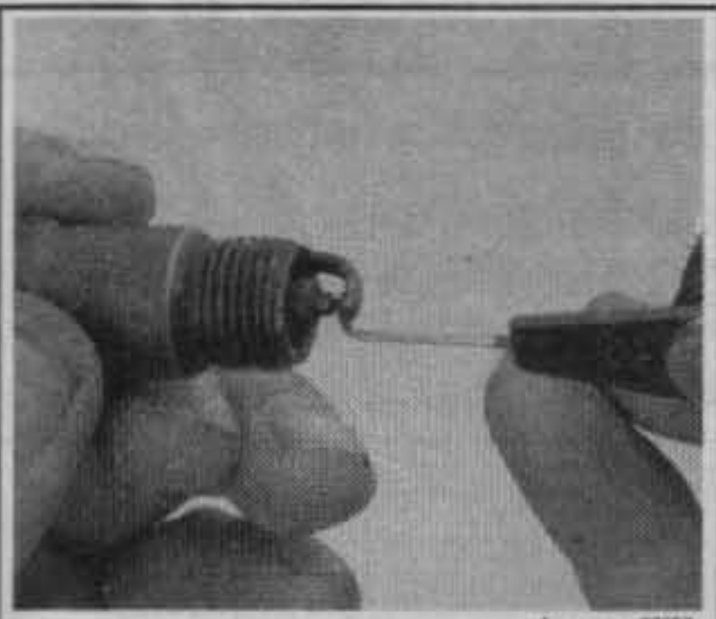

TCCS2903

Fig. 5 Checking the spark plug gap with a feeler gauge

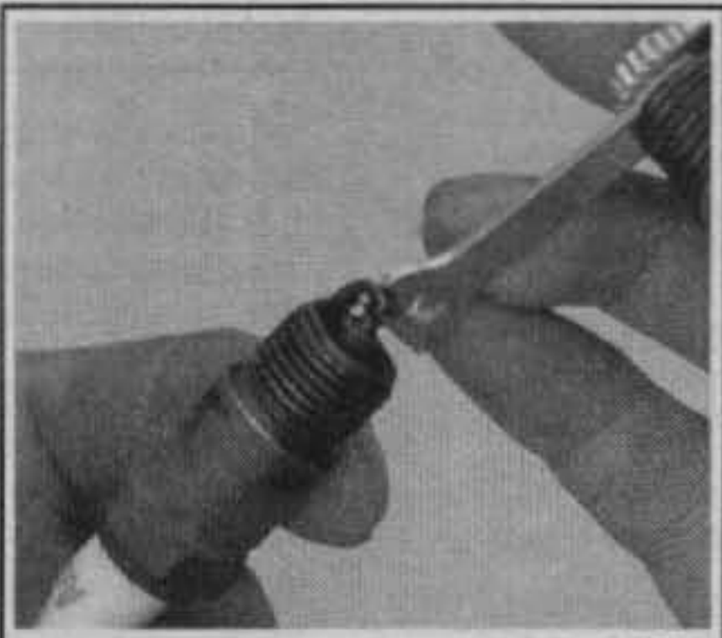

TCCS2904

Fig. 6 Adjusting the spark plug gap

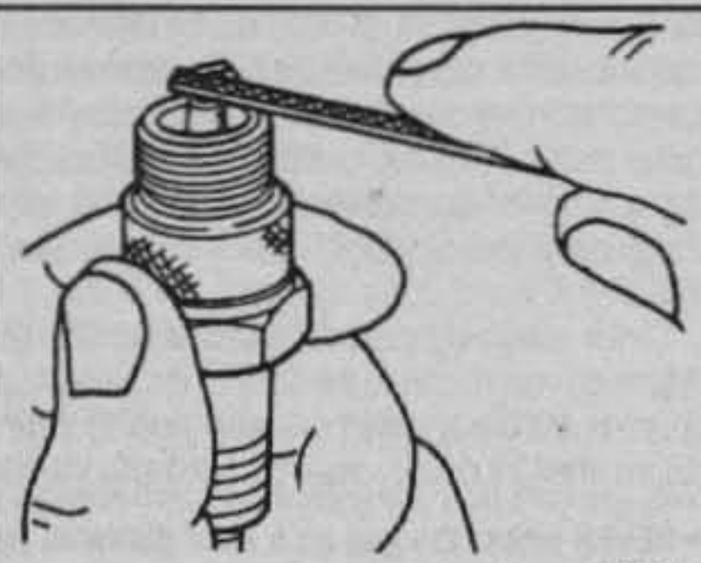

TCCS1141

Fig. 7 If the standard plug is in good condition, the electrode may be filed flat—WARNING: do not file platinum plugs

A normally worn spark plug should have light tan or gray deposits on the firing tip.

A carbon fouled plug, identified by soft, sooty, black deposits, may indicate an improperly tuned vehicle. Check the air cleaner, ignition components and engine control system.

This spark plug has been **left in the engine too long**, as evidenced by the extreme gap- Plugs with such an extreme gap can cause misfiring and stumbling accompanied by a noticeable lack of power.

An oil fouled spark plug indicates an engine with worn poston rings and/or bad valve seals allowing excessive oil to enter the chamber.

A physically damaged spark plug may be evidence of severe detonation in that cylinder. Watch that cylinder carefully between services, as a continued detonation will not only damage the plug, but could also damage the engine.

A bridged or almost bridged spark plug, identified by a build-up between the electrodes caused by excessive carbon or oil build-up on the plug.

TCCA1P40

Fig. 8 Inspect the spark plug to determine engine running conditions

the efficiency of the plug. Plugs can be cleaned on a spark plug cleaning machine, which can sometimes be found in service stations, or you can do an acceptable job of cleaning with a stiff brush. If the plugs are cleaned, the electrodes must be filed flat. Use an ignition points-file, not an emery board or the like, which will leave deposits. The electrodes must be filed perfectly flat with sharp edges; rounded edges reduce the spark plug voltage by as much as 50%.

Check spark plug gap before installation. The ground electrode (the L-shaped one connected to the body of the plug) must be parallel to the center electrode and the specified size wire gauge (please refer to the Tune-Up Specifications chart for details) must pass between the electrodes with a slight drag.

➡NEVER adjust the gap on a used platinum type spark plug.

Always check the gap on new plugs as they are not always set correctly at the factory. Do not use a flat feeler gauge when measuring the gap on a used plug, because the reading may be inaccurate. A round-wire type gapping tool is the best way to check the gap. The correct gauge should pass through the electrode gap with a slight drag. If you're in doubt, try one size smaller and one larger. The smaller gauge should go through easily, while the larger one shouldn't go through at all. Wire gapping tools usually have a bending tool attached. Use that to adjust the side electrode until the proper distance is obtained. Absolutely never attempt to bend the center electrode. Also, be careful not to bend the side electrode too far or too often as it may weaken and break off within the engine, requiring removal of the cylinder head to retrieve it.

INSTALLATION

1. Insert the plugs in the spark plug hole and tighten them hand-tight. Take care not to crossthread them.
2. Tighten the plugs to 26–30 ft. lbs. (35–41 Nm).
3. Install the spark plug wires on their plugs. Make sure that each wire is firmly connected to each plug.

CHECKING AND REPLACING SPARK PLUG CABLES

Visually inspect the spark plug cables for burns, cuts, or breaks in the insulation. Check the spark plug boots and nipples on the distributor cap and coil. Replace any damaged wiring. If no physical damage is obvious, the wires can be checked with an ohmmeter for excessive resistance. The resistance should be as follows:

- Up to 15 inches—3000–10,000 ohms
- 15–25 inches—4000–15,000 ohms
- 25–35 inches—6000–20,000 ohms
- Over 35 inches—8000–25,000 ohms

When installing a new set of spark plug cables, replace the cables one at a time so there will be no mix-up. Start by replacing the longest cable first. Install the boot firmly over the spark plug. Route the wire exactly the same as the original. Insert the nipple firmly into the tower on the distributor cap. Repeat the process for each cable.

FIRING ORDERS

See Figures 9, 10 and 11

➡To avoid confusion, remove and tag the spark plug wires one at a time, for replacement.

If a distributor is not keyed for installation with only one orientation, it could have been removed previously and rewired. The resultant wiring would hold the correct firing order, but could change the relative placement of the plug towers in relation to the engine. For this reason it is imperative that you label all wires before disconnecting any of them. Also, before removal, compare the current wiring with the accompanying illustrations. If the current wiring does not match, make notes in your book to reflect how your engine is wired.

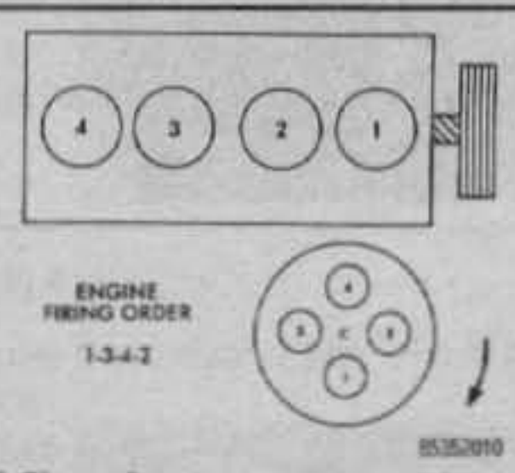

Fig. 10 1992–95 2.5L engine
Engine Firing Order: 1–3–4–2
Distributor Rotation: Clockwise

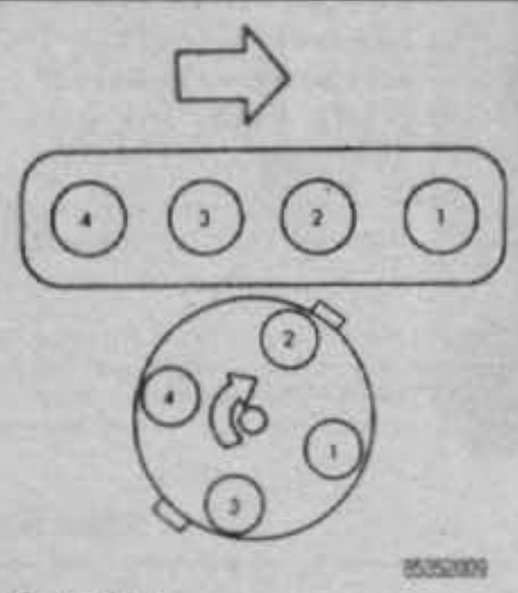

Fig. 9 1987–91 2.5L engine
Engine Firing Order: 1–3–4–2
Distributor Rotation: Clockwise

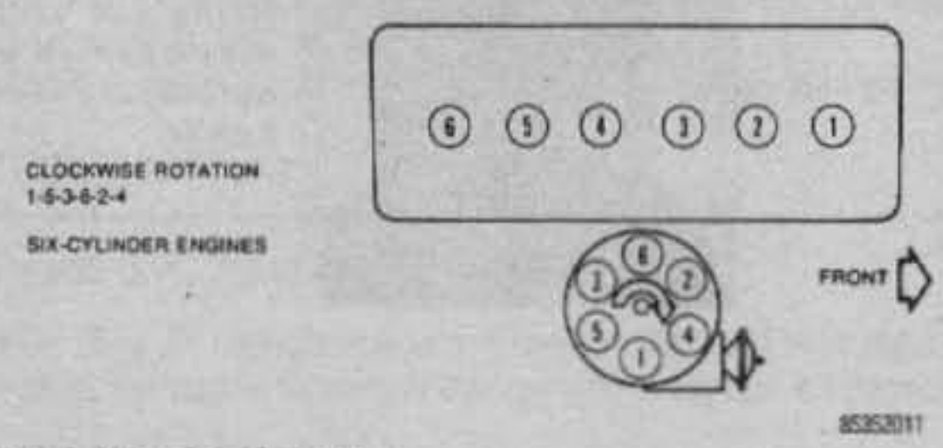

Fig. 11 4.0L and 4.2L engine
Engine Firing Order: 1–5–3–6–2–4
Distributor Rotation: Clockwise

ELECTRONIC IGNITION

Solid State Ignition (SSI) System

The Solid State Ignition (SSI) is standard equipment on all 4.2L engines. The system consists of a sensor and toothed trigger wheel located inside the distributor, a permanently sealed electronic control unit which determines dwell, along with ignition wires, spark plugs, and a coil.

The trigger wheel rotates on the distributor shaft. As one of its teeth nears the sensor magnet, the magnetic field shifts toward the tooth. When the tooth and sensor are aligned, the field is shifted to its maximum, signaling the electronic control unit to switch off the coil primary current. This starts an electronic timer inside the control unit, which allows the primary current to remain off only long enough to fire the spark plug. The timer adjusts the amount of time primary current is off according to conditions, thus automatically adjusting dwell. There is also a special circuit within the control unit to detect and ignore spurious signals. Spark timing is adjusted by both mechanical (centrifugal) and vacuum advance.

A wire of 1.35 ohms resistance is spliced into the ignition feed to reduce voltage to the coil during running conditions. The resistance wire is bypassed when the engine is being started so that full battery voltage may be supplied to the coil. Bypass is accomplished by the I-terminal on the solenoid.

DIAGNOSIS & TESTING

Secondary Circuit Test

1. Disconnect the coil wire from the center of the distributor cap.

➡Twist the rubber boot slightly in either direction, then grasp the boot and pull straight up. Do not pull on the wire, and do not use pliers.

2. Hold the wire ½ in. (13mm) from a ground with a pair of insulated pliers and a heavy glove. As the engine is cranked, watch for a spark.
3. If a spark appears, reconnect the coil wire. Remove the wire from one spark plug, and test for a spark as above.

WARNING

Do not remove the spark plug wires from cylinders 1 or 5, or sensor damage could occur!

4. If a spark occurs, the problem is in the fuel system or with the ignition timing. If no spark occurs, check for a defective rotor, cap, or spark plug wires.
5. If no spark occurs from the coil wire in Step 2, test the coil wire resistance with an ohmmeter. It should be 7,700–9,300 ohms at +75°F (24°C) or 12,000 ohms maximum at +93°F (34°C).

Coil Primary Circuit Test

1. Turn the ignition **ON**. Connect a voltmeter to the coil positive (+) terminal and a ground:
   a. If the voltage is 5.5–6.5 volts, go to Step 2.
   b. If above 7 volts, go to Step 4.
   c. If below 5.5 volts, disconnect the condenser lead and measure. If the reading with the condenser lead disconnected is now 5.5–6.5 volts, the condenser is faulty and should be replaced. If the reading is not 5.5–6.5 volts, go to Step 6.
2. With the tester connected as in Step 1, read the voltage with the engine cranking. If battery voltage is indicated, the circuit is okay. If not, go to Step 3.
3. Check for a short or open in the starter solenoid I-terminal wire. Check the solenoid for proper operation.
4. Disconnect the wire from the starter solenoid I-terminal, with the ignition **ON** and the voltmeter connected as in Step 1:
   a. If the voltage drops to 5.5–6.5 volts, the solenoid is faulty and should be replaced.
   b. If the voltage does not drop to 5.5–6.5 volts, connect a jumper between the coil negative (–) terminal and a ground. If the voltage now drops to 5.5–6.5 volts, go to Step 5. If not, repair the resistance wire.
5. Check for continuity between the coil negative (–) terminal and **D4**, and between **D1** to ground. If the continuity is okay, replace the control unit. If not, check for an open wire and go back to Step 2.
6. Turn ignition **OFF**. Connect an ohmmeter between the + coil terminal and dash connector **AV**. If above 1.40 ohms, repair the resistance wire.
7. With the ignition **OFF**, connect the ohmmeter between connector **AV** and ignition switch terminal **11**. If less than 0.1 ohms, replace the ignition switch or repair the wire, whichever is the cause. If above 0.1 ohms, check connections, and check for defective wiring.

Coil Test

1. Check the coil for cracks, carbon tracks, etc., and replace as necessary.
2. Connect an ohmmeter across the coil + and – terminals, with the coil connector removed. If 1.13–1.23 ohms at 75°F (24°C), the coil is okay. If not, replace it.

Control Unit and Sensor Test

1. With the ignition **ON**, remove the coil high tension wire from the distributor cap and hold it ½ in. (13mm) from a ground with insulated pliers. Disengage the 4-wire connector at the control unit. If a spark occurs (normal), go to Step 2. If not, go to Step 5.
2. Connect an ohmmeter to **D2** and **D3**. If the resistance is 400–800 ohms (normal), go to Step 6. If not, go to Step 3.
3. Disengage, then reconnect the 3-wire connector at distributor. If the reading is now 400–800 ohms, go to Step 6. If not, disengage the 3-wire connector and go to Step 4.
4. Connect the ohmmeter across **B2** and **B3**. If 300–800 ohms, repair the harness between the 3-wire and 4-wire connectors. If not, replace the sensor.
5. Connect the ohmmeter between **D1** and the battery negative terminal. If the reading is 0 (0.002 or less), go to Step 2. If above 0.002 ohms, there is a bad ground in the cable or at the distributor. Repair the ground and retest.
6. Connect a analog voltmeter across **D2** and **D3**. Crank the engine. If the needle fluctuates, the system is okay. If not, either the trigger wheel is defective, or the distributor is not turning. Repair or replace as required.

Ignition Feed-to-Control Unit Test

➡Do not perform this test without first performing the Coil Primary Circuit Test.

1. With the ignition **ON**, unplug the 2-wire connector at the module. Connect a voltmeter between **F2** and ground. If the reading is battery voltage, replace the control unit and go to Step 3. If not, go to Step 2.
2. Repair the cause of the voltage reduction: either the ignition switch or a corroded dash connector. Check for a spark at the coil wire. If okay, stop. If not, replace the control unit and check for proper operation.
3. Engage the 2-wire connector at the control unit, then unplug the 4-wire connector at the control unit. Connect an ammeter between **C1** and ground. If it reads 0.9–1.1 amps, the system is okay. If not, replace the module.

American Motors Solid State (Renix) Ignition System

All 1987–90 2.5L engines are equipped with electronically controlled fuel injection. Therefore, the electronic ignition system is different from that used on carbureted engines. These engines are equipped with the American Motors Solid State (Renix) ignition system which consists of:

- Spark plugs
- Secondary ignition cables
- Ignition coil
- Solid state Ignition Control Module (ICM)
- An Engine Control Unit (ECU)
- Forty tooth rotor (in the distributor)
- TDC sensor (mounted at the rear of the engine on the flywheel housing)

The control module consists of a solid state ignition circuit and an integrated ignition coil each of which can be removed and serviced separately. Spark timing control is determined by the Ignition Control Module (ICM). Signals from the ECU relay information about engine load and other driving conditions to both the ICM and fuel injection system electronic control components.

Electrical feed to the ICM is through terminal **A** of connector 1 (please see the illustration). Electrical feed occurs only when the ignition switch is in the **START** and **RUN** positions. Terminal **B** of connector **1** is grounded at the engine oil dipstick bracket, along with the ECU ground wire and the O_2sensor ground.

DIAGNOSIS & TESTING

Primary System

Primary system diagnosis is made through the diagnostic connector, using the appropriate diagnostic computer. Primary circuit tests are made at **(D1-2) B+** after ignition; tachometer voltage is at **D1-1**; vehicle ground is at **D1-3**.

Secondary System

1. Remove the center wire from the distributor cap.
2. Using insulated pliers, hold the terminal end about ½ in. (13mm) from the engine head and crank the engine.
3. If a spark jumps from the wire to the head, reconnect the distributor wire, then disengage a wire from one of the spark plugs.
4. Make a metal extension to insert in the spark plug wire boot, then, holding the wire and extension about ½ in. (13mm) from the head, crank the engine.
   a. If a spark occurs, check ECU sensors using tester MS 1700, or equivalent. If the sensors check out okay, the problem is probably in the fuel system.
   b. If no spark occurs, The rotor, distributor cap or spark plug wires are defective.

Single Board Engine Controller (SBEC II) System

The 1991–92 2.5L and 4.0L Engines are equipped with multi-port fuel injection. The ignition system, which is operated by the Single Board Engine Controller (SBEC II), consists of:

- Spark plugs
- Secondary ignition cables
- Ignition coil
- Distributor (contains rotor and fuel sync sensor)
- Single Board Engine Controller (SBEC II)
- Crankshaft position sensor

DIAGNOSIS & TESTING

Testing for Spark at the Coil

See Figure 12

Remove coil secondary cable from distributor cap. Using a suitable tool, hold the end of the cable about ¼ in. from good engine ground. Crank engine and look for good, constant spark at coil secondary wire. If spark is constant, have a helper continue to crank engine while moving coil secondary cable away from ground. Look for arcing at the coil tower. If arcing occurs, replace the coil. If no arcing occurs, ignition system is producing the necessary high secondary voltage. Make certain this voltage is getting to spark plugs by checking distributor rotor, cap, spark plug wires and spark plugs. If all check in good condition, ignition system is NOT cause of problem.

If spark is weak, not constant or not present, continue with Failure To Start test.

Testing Secondary Circuit

1. Remove the center wire from the distributor cap.
2. Using insulated pliers, hold the terminal end about ½ in. (13mm) from the engine head and crank the engine.
3. If a spark jumps from the wire to the head, reconnect the wire and remove a wire from one of the spark plugs.
4. Make a metal extension to insert in the spark plug wire boot, and, holding the wire and extension about ½ in. (13mm) from the head, crank the engine.
5. If a spark occurs, check the engine control sensors using tester DRB II, or equivalent. If the sensors check out okay, the problem is probably in the fuel system.
6. If no spark occurs, The rotor, distributor cap or spark plug wires are defective.

Powertrain Control Module (PCM) System

All 1993–95 2.5L and 4.0L Engines are equipped with multi-port fuel injection. The ignition system on these engines is operated by the Powertrain Control Module (PCM) and consists of:

- Spark plugs
- Secondary ignition cables
- Ignition coil
- Distributor (contains rotor and camshaft position sensor)
- Powertrain Control Module
- Crankshaft position sensor

DIAGNOSIS

Failure To Start Test

See Figures 13, 14, 15 and 16

➡Apply parking brake and block wheels before performing any engine running tests, including idle or timing checks and adjustments.

1. Check battery voltage and determine that a minimum of 12.4 volts is available for operation of cranking and ignition systems.
2. Crank engine for 5 seconds while monitoring voltage at coil positive terminal. If voltage remains near 0 during entire period of cranking, please refer to Section 5 in this book for on-board diagnostic checks of PCM and auto shutdown relay.

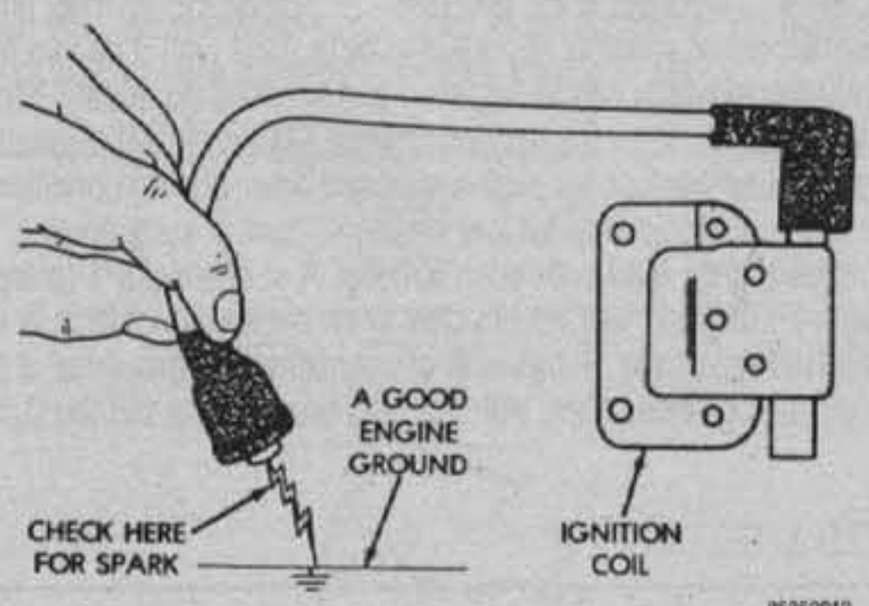

Fig. 12 When checking for spark only hold the wire using an insulated tool or you risk a BAD electrical shock

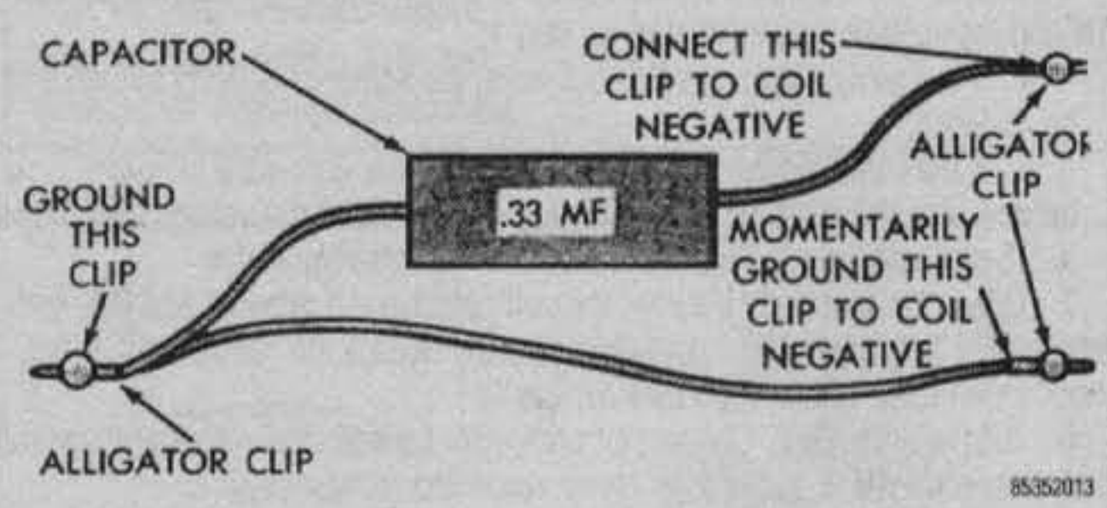

Fig. 13 Special jumper wire construction for grounding the coil

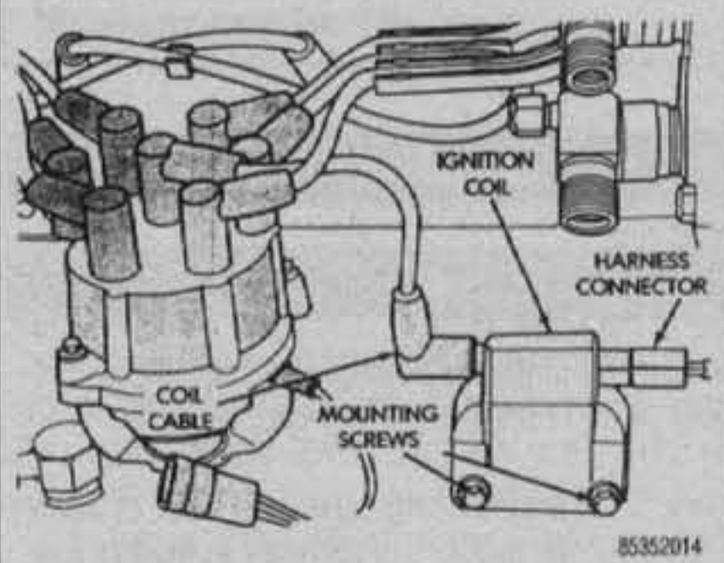

Fig. 14 Common coil harness connector

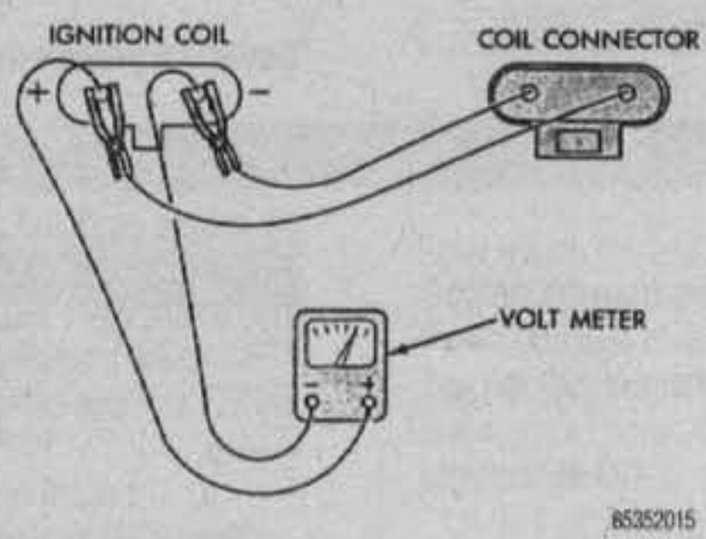

Fig. 15 Coil terminals

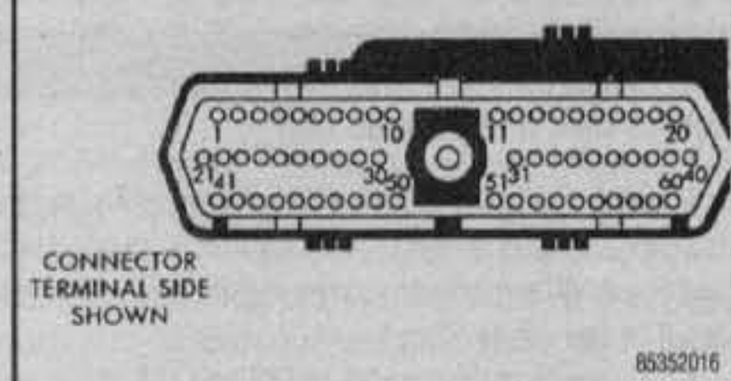

Fig. 16 PCM 60-way electrical connector

3. If measured voltage is near battery voltage but drops to 0 after 1–2 seconds of cranking, please refer to Section 5 in this book for on-board diagnostic checks of distributor reference pick-up circuit to PCM.

4. If measured voltage remains near battery voltage for entire 5 second cranking period, turn key **OFF** and remove SBEC 60-way connector. Check 60-way connector for any spread terminals.

5. Remove the wire-to-coil positive terminal and connect regular jumper wire between coil positive terminal and battery positive terminal.

6. Using a special jumper cable, momentarily ground terminal No. 19 of the PCM 60-way connector. A spark should be generated when ground is removed.

a. If spark is generated, replace the PCM.

b. If no spark is seen, use a special jumper to ground the coil negative terminal directly. If spark is produced by directly grounding the negative coil terminal, but was not produced with pin No. 19, trace and repair open condition within wiring harness. If no spark is produced when directly grounding the coil, the faulty ignition coil should be replaced.

Secondary Circuit Testing

1. Remove the center wire from the distributor cap.

2. Using insulated pliers, hold the terminal end about ½ in. (13mm) from a good engine ground and crank the engine.

3. Check for steady arcing. If steady arcing does not occur, inspect the secondary coil cable. Also, inspect the distributor cap and rotor for cracks or burn marks, then repair as necessary.

4. Remove the cable from one spark plug.

5. Using insulated pliers, hold the terminal end about ½ in. (13mm) from the block or head and crank the engine.

6. If a spark occurs, check ECU sensors using tester DRB II, or equivalent. If the sensors check out okay, the problem is probably in the fuel system.

7. If no spark occurs, The rotor, distributor cap or spark plug wires are defective.

IGNITION TIMING

Ignition timing is a measurement, in degrees of crankshaft rotation, of the point at which each cylinder's spark plug fires. It is normally listed as a specification in degrees before or after Top Dead Center (TDC) of the compression stroke.

On the 4.2L engine, the timing can be adjusted by turning the distributor in the engine. A graduated timing degree scale located on the timing case cover is used for reference when timing the ignition system. A milled index notch in the vibration damper is used to align the No. 1 cylinder ignition position of the crankshaft with the correct timing degree mark on the graduated scale.

On the 2.5L and 4.0L engines, the Electronic Control Unit (ECU) or the Engine Controller, as referred to on later models, determines the amount of spark advance and electronically changes timing as operating conditions vary. For further information, please refer to Electronic Engine Controls in Section 4.

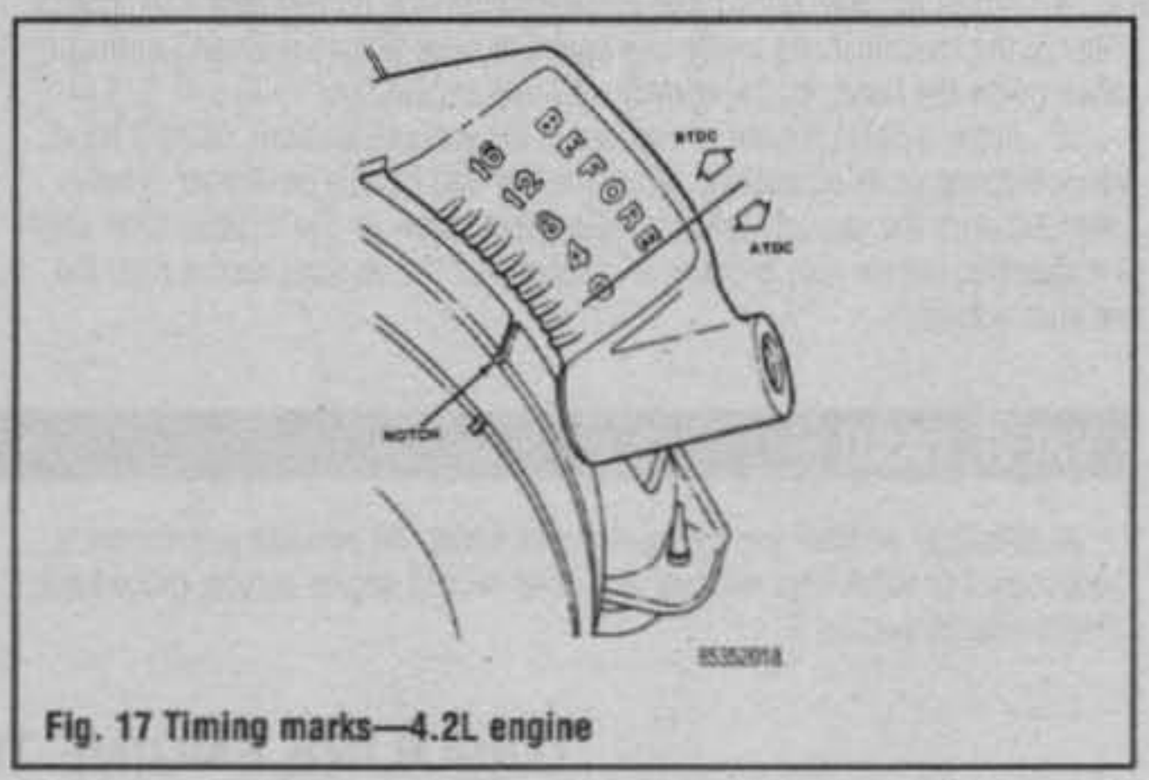

Fig. 17 Timing marks—4.2L engine

Timing Adjustment

PROCEDURE

4.2L Engine

See Figure 17

➡The ignition timing instructions on the Vehicle Emission Control Information (VECI) label should always be followed, especially if they differ this procedure. The instructions and specifications on the label may reflect changes which occurred part way through a production run. If the label is missing, a replacement can often be ordered from a local dealer.

1. Warm up the engine to normal operating temperature.

2. Set the parking brake, shift the automatic transmission to PARK and the manual transmission to the NEUTRAL position.

3.Clean off the timing marks, then use some white chalk to highlight the pulley notch and timing scale.

➡Make sure the the timing light you use is rated for electronic or or solid state ignitions. Generally, these lights have two wires which connect to the battery with alligator clips and a third wire which connects to the No. 1 spark plug wire. These older lights may require the removal of the spark plug wire and the installation of an inline adapter. The best lights have an inductive pick-up on the third wire; this allows you to simply clip the small box over the wire. In either case follow the timing light manufacturer's instructions for the proper hook-up.

4. Stop the engine and connect the timing light to the No. 1 (front cylinder) spark plug wire.

5. Disconnect the Computerized Emission Control (CEC) system vacuum switch wire, located at the top of the cylinder head cover.

6. Disconnect and plug the vacuum line at the distributor. This is done to prevent any distributor vacuum advance.

7. Start the engine, increase the idle speed to 1600 rpm, and adjust the idle to the figure shown on the underhood sticker. This is done to prevent any distributor centrifugal advance. If there is a throttle stop solenoid, disconnect it electrically.

8. Aim the timing light at the pointer marks. Be careful not to touch the fan, as it may appear to be standing still (an illusion caused by the strobe effect of the timing light). If the pulley notch isn't aligned with the proper timing mark (refer to the Tune-Up Specifications chart), the timing will have to be adjusted.

9. Loosen the distributor clamp locknut. You can buy trick wrenches that will often make this task a lot easier. Turn the distributor slowly to adjust the timing, holding it by the base and not the cap. Turn counterclockwise to advance timing (toward BTDC), and clockwise to retard (toward TDC or ATDC).

10. Tighten the locknut, then check the timing again in case the distributor moved slightly as you tightened it.

11. Connect the distributor vacuum line, the vacuum switch wire and correct the idle speed to that specified in the Tune-Up Specifications chart.

12. Stop the engine and disconnect the timing light.

IDLE ADJUSTMENTS

4.2L Engine

See Figure 18

This section contains only idle speed adjustment for the carbureted 4.2L engine. For all other fuel system adjustments, repair and overhaul procedures please refer to Section 5 of this manual.

➡To adjust the carburetor on the 4.2L engine, the carburetor choke and intake manifold heater must be off. This occurs when the engine coolant heats to approximately +160°F (71°C).

1. Have the engine at normal operating temperature. Connect a tachometer to the ignition coil negative (TACH) terminal.

2. Remove the vacuum hose from the Sol-Vac vacuum actuator unit. Plug the vacuum hose.

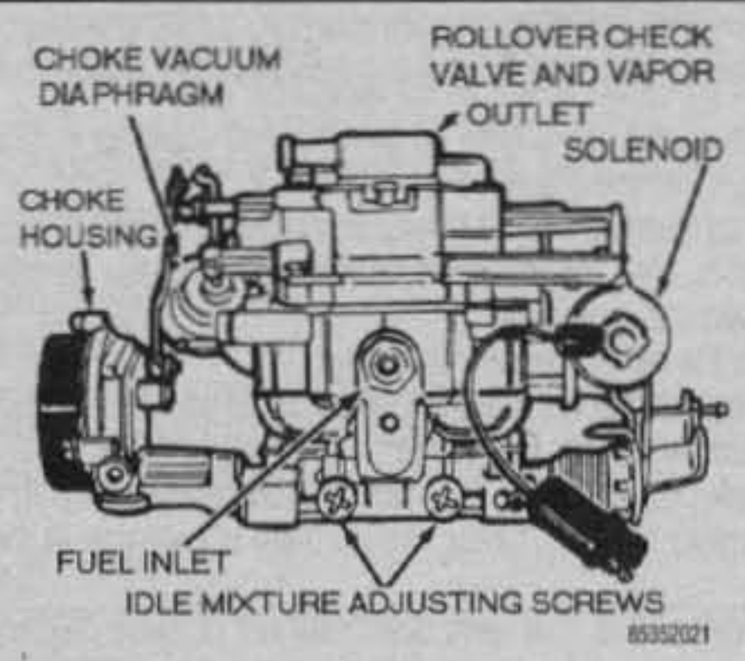

Fig. 18 BBD 2-bbl carburetor—4.2L engine

3. Disengage the holding solenoid wire connector.

4. Adjust the curb (slow) idle screw to obtain the correct curb idle speed. Refer to the specifications under Idle Speed or refer to the Emission Information label, under the hood, for the correct curb idle engine rpm.

5. Apply a direct source of vacuum to the vacuum actuator, using a hand vacuum pump or its equivalent. When the Sol-Vac throttle positioner is fully extended, turn the vacuum actuator adjustment screw on the throttler lever until the specified engine rpm is obtained. Disconnect the vacuum source from the vacuum actuator.

6. With a jumper wire, apply battery voltage (12v) to energize the holding solenoid.

➡The holding wire connector can be installed and either the rear window defroster or the air conditioner (with the compressor clutch wire disconnected) can be turned On to energize the holding solenoid.

7. Hold the throttle open manually to allow the throttle positioner to fully extend.

➡Without the vacuum actuator, the throttle must be opened manually to allow the Sol-Vac throttle positioner to fully extend.

8. If the holding solenoid idle speed is not within specifications, adjust the idle using the ¼ in. (6mm) hex-headed adjustment screw on the end of the Sol-Vac unit. Adjust to specifications.

9. Disconnect the jumper wire from the Sol-Vac holding solenoid wire connector, if used. Connect the wire connector to the Sol-Vac unit, if not connected. Install the original vacuum hose to the vacuum actuator.

10. Remove the tachometer and if disconnected, connect the compressor clutch wire. Install any other component that was previously removed.

2.5L and 4.0L Engines

On the 2.5L and 4.0L fuel injected engines, the Engine Control Unit (ECU) or the Engine Controller, as it is often referred to on later models, regulates all air/fuel mixture and idle speed settings electronically. Therefore, no periodic adjustments are necessary or possible. For all other fuel system repair procedures, please refer to Section 5 of this manual.

VALVE LASH

All Wrangler engines use hydraulic valve lifters. No periodic adjustment is necessary. For valve lifter removal and other related engine service procedures, please refer to Section 3.

GASOLINE ENGINE TUNE-UP SPECIFICATIONS

Year	Engine ID/VIN	Engine Displacement Liters (cc)	Spark Plugs Gap (in.)	Ignition Timing (deg.) MT	Ignition Timing (deg.) AT	Fuel Pump (psi)	Idle Speed (rpm) MT	Idle Speed (rpm) AT	Valve Clearance In.	Valve Clearance Ex.
1987	H	2.5 (2458)	0.035	①	①	6.5-8	750	750	Hyd.	Hyd.
	C	4.2 (4228)	0.035	9B②	9B②	4-5	700	600	Hyd.	Hyd.
1988	H	2.5 (2458)	0.035	①	①	14-15	①	①	Hyd.	Hyd.
	C	4.2 (4228)	0.035	9B②	9B②	4-5	700	600	Hyd.	Hyd.
1989	E	2.5 (2458)	0.035	①	①	14-15	①	①	Hyd.	Hyd.
	M	4.2 (4228)	0.035	9B②	9B②	4-5	700	600	Hyd.	Hyd.
1990	E	2.5 (2458)	0.035	①	①	14-15	①	①	Hyd.	Hyd.
	T	4.2 (4228)	0.035	9B②	9B②	4-5	700	600	Hyd.	Hyd.
1991	P	2.5 (2458)	0.035	①	①	39-41	①	①	Hyd.	Hyd.
	S	4.0 (3966)	0.035	①	①	39-41	①	①	Hyd.	Hyd.
1992	P	2.5 (2458)	0.035	①	①	39-41	①	①	Hyd.	Hyd.
	S	4.0 (3966)	0.035	①	①	39-41	①	①	Hyd.	Hyd.
1993	P	2.5 (2458)	0.035	①	①	39-41	①	①	Hyd.	Hyd.
	S	4.0 (3966)	0.035	①	①	39-41	①	①	Hyd.	Hyd.
1994-95	P	2.5 (2458)	0.035	①	①	39-41	①	①	Hyd.	Hyd.
	S	4.0 (3966)	0.035	①	①	39-41	①	①	Hyd.	Hyd.

NOTE: The Vehicle Emission Control Information label often reflects specification changes made during production. The label figures must be used if they differ from those in this chart.

B—Before Top Dead Center

Hyd.—Hydraulic

① Not adjustable

② High altitude: 16 @ 1600 rpm

85352C01

Troubleshooting Engine Performance

Problem	Cause	Solution
Hard starting (engine cranks normally)	· Binding linkage, choke valve or choke piston	· Repair as necessary
	· Restricted choke vacuum diaphragm	· Clean passages
	· Improper fuel level	· Adjust float level
	· Dirty, worn or faulty needle valve and seat	· Repair as necessary
	· Float sticking	· Repair as necessary
	· Faulty fuel pump	· Replace fuel pump
	· Incorrect choke cover adjustment	· Adjust choke cover
	· Inadequate choke unloader adjustment	· Adjust choke unloader
	· Faulty ignition coil	· Test and replace as necessary
	· Improper spark plug gap	· Adjust gap
	· Incorrect ignition timing	· Adjust timing
	· Incorrect valve timing	· Check valve timing; repair as necessary
Rough idle or stalling	· Incorrect curb or fast idle speed	· Adjust curb or fast idle speed
	· Incorrect ignition timing	· Adjust timing to specification
	· Improper feedback system operation	· Refer to Chapter 4
	· Improper fast idle cam adjustment	· Adjust fast idle cam
	· Faulty EGR valve operation	· Test EGR system and replace as necessary
	· Faulty PCV valve air flow	· Test PCV valve and replace as necessary
	· Choke binding	· Locate and eliminate binding condition
	· Faulty TAC vacuum motor or valve	· Repair as necessary
	· Air leak into manifold vacuum	· Inspect manifold vacuum connections and repair as necessary
	· Improper fuel level	· Adjust fuel level
	· Faulty distributor rotor or cap	· Replace rotor or cap
	· Improperly seated valves	· Test cylinder compression, repair as necessary
	· Incorrect ignition wiring	· Inspect wiring and correct as necessary
	· Faulty ignition coil	· Test coil and replace as necessary
	· Restricted air vent or idle passages	· Clean passages
	· Restricted air cleaner	· Clean or replace air cleaner filter element
	· Faulty choke vacuum diaphragm	· Repair as necessary
Faulty low-speed operation	· Restricted idle transfer slots	· Clean transfer slots
	· Restricted idle air vents and passages	· Clean air vents and passages
	· Restricted air cleaner	· Clean or replace air cleaner filter element
	· Improper fuel level	· Adjust fuel level
	· Faulty spark plugs	· Clean or replace spark plugs

85352200

Troubleshooting Engine Performance

Problem	Cause	Solution
Faulty low-speed operation (cont.)	· Dirty, corroded, or loose ignition secondary circuit wire connections	· Clean or tighten secondary circuit wire connections
	· Improper feedback system operation	· Refer to Chapter 4
	· Faulty ignition coil high voltage wire	· Replace ignition coil high voltage wire
	· Faulty distributor cap	· Replace cap
Faulty acceleration	· Improper accelerator pump stroke	· Adjust accelerator pump stroke
	· Incorrect ignition timing	· Adjust timing
	· Inoperative pump discharge check ball or needle	· Clean or replace as necessary
	· Worn or damaged pump diaphragm or piston	· Replace diaphragm or piston
	· Leaking carburetor main body cover gasket	· Replace gasket
	· Engine cold and choke set too lean	· Adjust choke cover
	· Improper metering rod adjustment (BBD Model carburetor)	· Adjust metering rod
	· Faulty spark plug(s)	· Clean or replace spark plug(s)
	· Improperly seated valves	· Test cylinder compression, repair as necessary
	· Faulty ignition coil	· Test coil and replace as necessary
	· Improper feedback system operation	· Refer to Chapter 4
Faulty high speed operation	· Incorrect ignition timing	· Adjust timing
	· Faulty distributor centrifugal advance mechanism	· Check centrifugal advance mechanism and repair as necessary
	· Faulty distributor vacuum advance mechanism	· Check vacuum advance mechanism and repair as necessary
	· Low fuel pump volume	· Replace fuel pump
	· Wrong spark plug air gap or wrong plug	· Adjust air gap or install correct plug
	· Faulty choke operation	· Adjust choke cover
	· Partially restricted exhaust manifold, exhaust pipe, catalytic converter, muffler, or tailpipe	· Eliminate restriction
	· Restricted vacuum passages	· Clean passages
	· Improper size or restricted main jet	· Clean or replace as necessary
	· Restricted air cleaner	· Clean or replace filter element as necessary
	· Faulty distributor rotor or cap	· Replace rotor or cap
	· Faulty ignition coil	· Test coil and replace as necessary
	· Improperly seated valve(s)	· Test cylinder compression, repair as necessary
	· Faulty valve spring(s)	· Inspect and test valve spring tension, replace as necessary
	· Incorrect valve timing	· Check valve timing and repair as necessary

85352C03

Troubleshooting Engine Performance (cont.)

Problem	Cause	Solution
Faulty high speed operation (cont.)	· Intake manifold restricted	· Remove restriction or replace manifold
	· Worn distributor shaft	· Replace shaft
	· Improper feedback system operation	· Refer to Chapter 4
Misfire at all speeds	· Faulty spark plug(s)	· Clean or replace spark plug(s)
	· Faulty spark plug wire(s)	· Replace as necessary
	· Faulty distributor cap or rotor	· Replace cap or rotor
	· Faulty ignition coil	· Test coil and replace as necessary
	· Primary ignition circuit shorted or open intermittently	· Troubleshoot primary circuit and repair as necessary
	· Improperly seated valve(s)	· Test cylinder compression, repair as necessary
	· Faulty hydraulic tappet(s)	· Clean or replace tappet(s)
	· Improper feedback system operation	· Refer to Chapter 4
	· Faulty valve spring(s)	· Inspect and test valve spring tension, repair as necessary
	· Worn camshaft lobes	· Replace camshaft
	· Air leak into manifold	· Check manifold vacuum and repair as necessary
	· Improper carburetor adjustment	· Adjust carburetor
	· Fuel pump volume or pressure low	· Replace fuel pump
	· Blown cylinder head gasket	· Replace gasket
	· Intake or exhaust manifold passage(s) restricted	· Pass chain through passage(s) and repair as necessary
	· Incorrect trigger wheel installed in distributor	· Install correct trigger wheel
Power not up to normal	· Incorrect ignition timing	· Adjust timing
	· Faulty distributor rotor	· Replace rotor
	· Trigger wheel loose on shaft	· Reposition or replace trigger wheel
	· Incorrect spark plug gap	· Adjust gap
	· Faulty fuel pump	· Replace fuel pump
	· Incorrect valve timing	· Check valve timing and repair as necessary
	· Faulty ignition coil	· Test coil and replace as necessary
	· Faulty ignition wires	· Test wires and replace as necessary
	· Improperly seated valves	· Test cylinder compression and repair as necessary
	· Blown cylinder head gasket	· Replace gasket
	· Leaking piston rings	· Test compression and repair as necessary
	· Worn distributor shaft	· Replace shaft
	· Improper feedback system operation	· Refer to Chapter 4
Intake backfire	· Improper ignition timing	· Adjust timing
	· Faulty accelerator pump discharge	· Repair as necessary
	· Defective EGR CTO valve	· Replace EGR CTO valve
	· Defective TAC vacuum motor or valve	· Repair as necessary

85352C04

Troubleshooting Engine Performance (cont.)

Problem	Cause	Solution
Intake backfire (cont.)	· Lean air/fuel mixture	· Check float level or manifold vacuum for air leak. Remove sediment from bowl
Exhaust backfire	· Air leak into manifold vacuum	· Check manifold vacuum and repair as necessary
	· Faulty air injection diverter valve	· Test diverter valve and replace as necessary
	· Exhaust leak	· Locate and eliminate leak
Ping or spark knock	· Incorrect ignition timing	· Adjust timing
	· Distributor centrifugal or vacuum advance malfunction	· Inspect advance mechanism and repair as necessary
	· Excessive combustion chamber deposits	· Remove with combustion chamber cleaner
	· Air leak into manifold vacuum	· Check manifold vacuum and repair as necessary
	· Excessively high compression	· Test compression and repair as necessary
	· Fuel octane rating excessively low	· Try alternate fuel source
	· Sharp edges in combustion chamber	· Grind smooth
	· EGR valve not functioning properly	· Test EGR system and replace as necessary
Surging (at cruising to top speeds)	· Low carburetor fuel level	· Adjust fuel level
	· Low fuel pump pressure or volume	· Replace fuel pump
	· Metering rod(s) not adjusted properly (BBD Model Carburetor)	· Adjust metering rod
	· Improper PCV valve air flow	· Test PCV valve and replace as necessary
	· Air leak into manifold vacuum	· Check manifold vacuum and repair as necessary
	· Incorrect spark advance	· Test and replace as necessary
	· Restricted main jet(s)	· Clean main jet(s)
	· Undersize main jet(s)	· Replace main jet(s)
	· Restricted air vents	· Clean air vents
	· Restricted fuel filter	· Replace fuel filter
	· Restricted air cleaner	· Clean or replace air cleaner filter element
	· EGR valve not functioning properly	· Test EGR system and replace as necessary
	· Improper feedback system operation	· Refer to Chapter 4

85352C05

ENGINE ELECTRICAL 3-2
IGNITION COIL 3-2
REMOVAL & INSTALLATION 3-2
IGNITION MODULE 3-2
REMOVAL & INSTALLATION 3-2
DISTRIBUTOR 3-3
REMOVAL & INSTALLATION 3-3
ALTERNATOR 3-6
ALTERNATOR PRECAUTIONS 3-6
REMOVAL & INSTALLATION 3-6
BELT TENSION ADJUSTMENT 3-7
REGULATOR 3-7
STARTER 3-7
REMOVAL & INSTALLATION 3-7
ENGINE MECHANICAL 3-8
ENGINE OVERHAUL TIPS 3-11
TOOLS 3-11
INSPECTION TECHNIQUES 3-11
OVERHAUL TIPS 3-11
REPAIRING DAMAGED THREADS 3-11
CHECKING ENGINE COMPRESSION 3-12
ENGINE 3-12
REMOVAL & INSTALLATION 3-12
ROCKER ARM (VALVE) COVER 3-14
REMOVAL & INSTALLATION 3-14
ROCKER ARMS AND PUSHRODS 3-16
REMOVAL & INSTALLATION 3-16
THERMOSTAT 3-16
REMOVAL & INSTALLATION 3-16
INTAKE MANIFOLD 3-17
REMOVAL & INSTALLATION 3-17
EXHAUST MANIFOLD 3-20
REMOVAL & INSTALLATION 3-20
RADIATOR 3-20
REMOVAL & INSTALLATION 3-20
TRANSMISSION OIL COOLER 3-21
WATER PUMP 3-21
REMOVAL & INSTALLATION 3-21
CYLINDER HEAD 3-23
REMOVAL & INSTALLATION 3-23
VALVES AND SPRINGS 3-26
REMOVAL 3-27
CLEANING AND INSPECTION 3-27
REFACING 3-28
LAPPING 3-28
VALVE SPRING TESTING 3-28
INSTALLATION 3-28
VALVE SEATS 3-29
REFACING 3-29
OIL PAN 3-29
REMOVAL & INSTALLATION 3-29
OIL PUMP 3-31
REMOVAL & INSTALLATION 3-31
CRANKSHAFT PULLEY
(VIBRATION DAMPER) 3-32
REMOVAL & INSTALLATION 3-32
TIMING GEAR COVER AND SEAL 3-32
REMOVAL & INSTALLATION 3-32
TIMING CHAIN AND TENSIONER 3-34
REMOVAL & INSTALLATION 3-34
CAMSHAFT AND BEARINGS 3-36
REMOVAL & INSTALLATION 3-36
INSPECTION 3-37
BEARING REPLACEMENT 3-37
PISTONS AND CONNECTING RODS 3-38
REMOVAL 3-38
PISTON PIN REMOVAL &
INSTALLATION 3-38
INSPECTION 3-38
CYLINDER HONING 3-39
CHECKING CYLINDER BORE 3-39
RING TOLERANCES 3-40
RING INSTALLATION 3-40
PISTON ASSEMBLY & INSTALLATION 3-41
REAR MAIN OIL SEAL 3-41
REPLACEMENT 3-41
CRANKSHAFT 3-42
REMOVAL 3-42
INSPECTION 3-43
INSTALLATION 3-43
FLYWHEEL/FLEX PLATE AND RING GEAR 3-44
REMOVAL & INSTALLATION 3-44
EXHAUST SYSTEM 3-44
MUFFLER 3-44
REMOVAL & INSTALLATION 3-44
FRONT EXHAUST PIPE (HEAD PIPE) 3-45
REMOVAL & INSTALLATION 3-45
REAR EXHAUST PIPE OR TAILPIPE 3-45
REMOVAL & INSTALLATION 3-45
CATALYTIC CONVERTER 3-45
REMOVAL & INSTALLATION 3-45
SPECIFICATIONS CHARTS
GENERAL ENGINE SPECIFICATIONS 3-8
VALVE SPECIFICATIONS 3-8
CAMSHAFT SPECIFICATIONS 3-9
CAMSHAFT AND CONNECTING ROD
SPECIFICATIONS 3-9
PISTON AND RING SPECIFICATIONS 3-10
TORQUE SPECIFICATIONS 3-10
ENGINE MECHANICAL SPECIFICATIONS 3-46
TORQUE SPECIFICATIONS, ADDITIONAL 3-60

3

ENGINE AND ENGINE OVERHAUL

ENGINE ELECTRICAL 3-2
ENGINE MECHANICAL 3-8
EXHAUST SYSTEM 3-44

ENGINE ELECTRICAL

Ignition Coil

REMOVAL & INSTALLATION

2.5L engine

1987–90 VEHICLES

See Figure 1

On 1987–90 vehicles, the coil is an integral part of the Ignition Control Module (ICM), mounted to the left of the battery on the firewall. Please refer to Ignition Module replacement which follows.

1991–95 VEHICLES

See Figure 2

1. Disconnect the ignition coil secondary cable from the ignition coil.
2. Disconnect the engine harness connector to the coil.
3. Remove the ignition coil mounting bolts and remove the coil.
4. Installation is the reverse of removal.

4.0L Engine

See Figure 2

1. Disconnect the ignition coil secondary cable from the ignition coil.
2. Disconnect the engine harness connector to the coil.
3. Remove the ignition coil mounting bolts and remove the coil.
4. Installation is the reverse of removal.

4.2L Engine

See Figure 3

1. Disconnect the battery ground.
2. Disconnect the two small and one large wire from the coil.
3. Disconnect the condenser connector from the coil, if equipped.
4. Unbolt and remove the coil.
5. Installation is the reverse of removal.

Ignition Module

REMOVAL & INSTALLATION

See Figures 1, 4, 5 and 6

The ignition module is mounted next to the battery on all models. It is a sealed, weatherproof unit on the 4.2L engine. 1987–90 vehicles equipped with a 2.5L engine, incorporate the coil in the control module.

Removing the module, on all models, is a matter of simply removing the fasteners that attach it to the fender or firewall and pulling apart the connectors. When unplugging the connectors, pull them apart with a firm, straight pull. NEVER PRY THEM APART! To pry them will cause damage. When reconnecting them, coat the mating ends with silicone dielectric grease to waterproof the connection. Press the connectors together firmly to overcome any vacuum lock caused by the grease.

➡If the locking tabs weaken or break, don't replace the unit. Just secure the connection with electrical tape or tie straps.

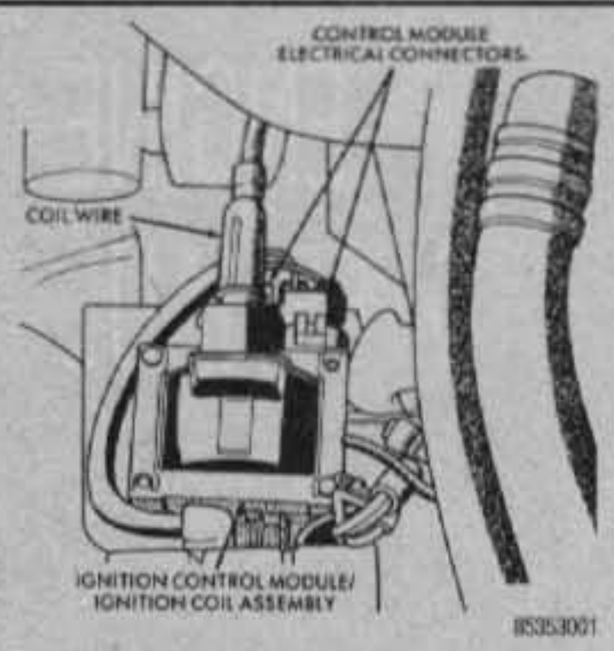

Fig. 1 Ignition control module/coil assembly—1987–90 with 2.5L engine

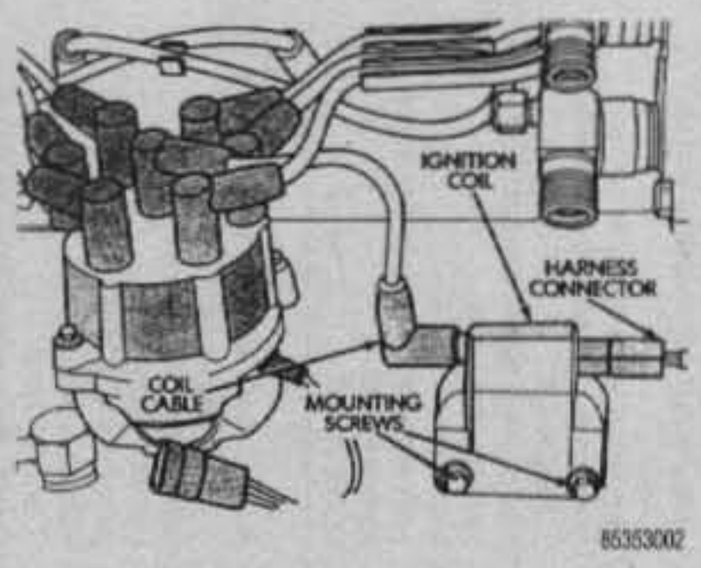

Fig. 2 Ignition coil assembly—1991–95 with 2.5L and 4.0L engines

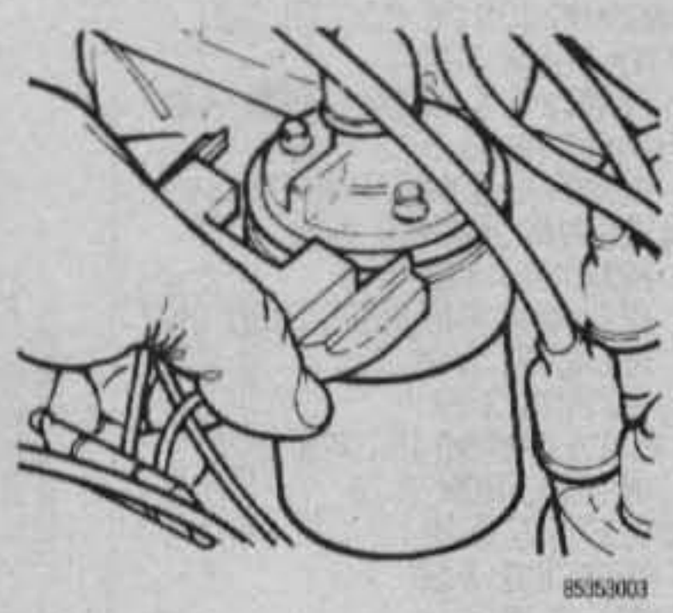

Fig. 3 Ignition coil assembly—4.2L engine

Fig. 4 Electronic ignition control unit—4.2L engine

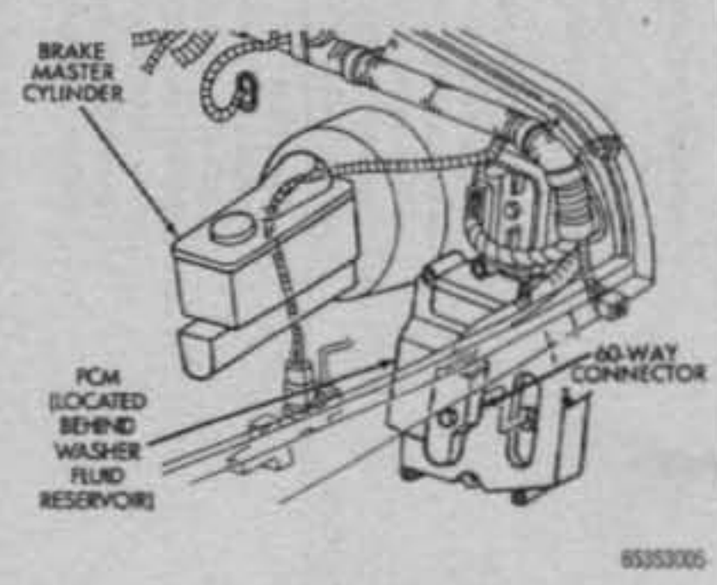

Fig. 5 Power Control Module (PCM) location—all 1991–95 vehicles

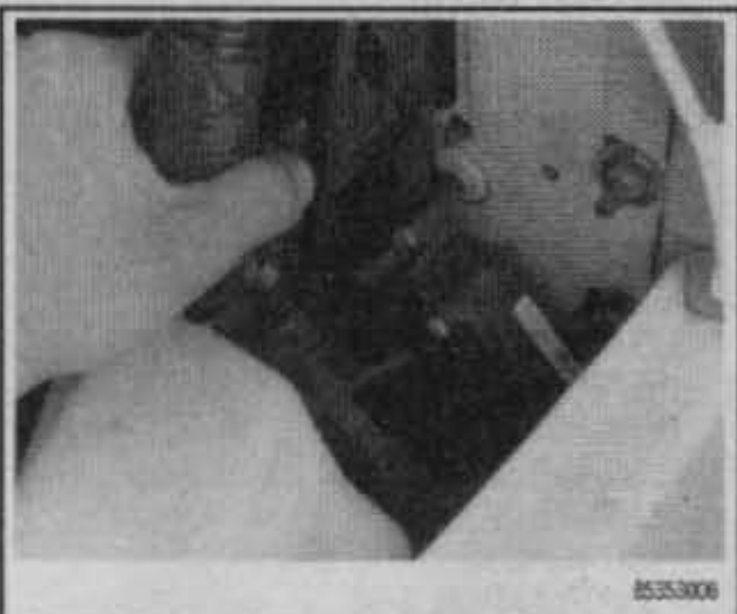

Fig. 6 Power Control Module (PCM) is located behind the windshield washer reservoir

Distributor

REMOVAL & INSTALLATION

2.5L Engine

1987–90 VEHICLES

See Figures 7, 8, 9 and 10

1. Disconnect the negative battery cable.
2. Remove the primary lead from the terminal post at the side of the distributor.

The wire connector will contain a special conductive grease. Do not remove it. The same grease will also be found on the metal parts of the rotor.

3. Disconnect the vacuum line if there is one.
4. Remove the two distributor cap retaining hooks or screws and remove the distributor cap.
5. Note the position of the rotor in relation to the base. Scribe a mark on the base of the distributor and on the engine block to facilitate reinstallation. Align the marks with the direction the metal tip of the rotor is pointing.
6. Remove the bolt that holds the distributor to the engine.
7. Lift the distributor assembly from the engine.

To install, if engine was not disturbed:

8. Insert the distributor shaft and assembly into the engine. Line up the mark on the distributor and the one on the engine with the metal tip of the rotor. Make sure that the vacuum advance diaphragm is pointed in the same direction as it was pointed originally. This will be done automatically if the marks on the engine and the distributor are line up with the rotor.
9. Install the distributor hold-down bolt and clamp. Leave the screw loose enough so that you can move the distributor with heavy hand pressure.
10. Connect the primary wire to the distributor side of the coil. Install the distributor cap on the distributor housing. Secure the distributor cap with the spring clips or the screw type retainers, whichever is used.
11. Install the spark plug wires. Make sure that the wires are pressed all of the way into the top of the distributor cap and firmly onto the spark plugs.

If the engine was turned while the distributor was removed, or if the marks were not drawn, it will be necessary to initially time the engine. Follow the procedure below.

To install, if engine was disturbed:

12. Rotate the engine until the No.1 piston is at TDC compression.
13. Using a flat bladed screwdriver, in the distributor hole, rotate the oil pump gear so that the slot in the oil pump shaft is slightly past the 3:00 o'clock position, relative to the length of the engine block.
14. With the distributor cap removed, install the distributor with the rotor at the 5:00 o'clock position, relative to the oil pump gear shaft slot. When the distributor is completely in place, the rotor should be at the 6:00 o'clock position. If not, remove the distributor and perform the entire procedure again.
15. Tighten the lockbolt.

1991–95 VEHICLES

See Figures 11 thru 21

1. Disconnect the negative battery cable.
2. Unfasten the distributor cap retaining screws. Remove the distributor cap with the coil and spark plug wires attached and position them aside.
3. Disconnect the distributor primary wiring connector.
4. Scribe a mark on the distributor housing in line with the tip of the rotor.
5. Note the position of the rotor and distributor housing in relation to the surrounding engine components as reference points for installing the distributor.
6. Remove the distributor hold-down bolt and clamp.
7. Lift the distributor straight up and out of the engine.

To install, if engine was not disturbed:

8. Clean the distributor mounting area of the cylinder block.
9. Install a new distributor mounting gasket.

There is a fork on the distributor housing where the housing seats against the engine block. The slot in the fork aligns with the distributor hold-down bolt hole in the engine block. The distributor is correctly installed when the rotor is correctly positioned. This is the slot in the fork aligned with the hold-down bolt hole in the cylinder block. Because of the fork in the distributor housing initial ignition timing is not adjustable (the distributor cannot be rotated).

10. If the engine was not rotated while the distributor was removed, perform the following:
    a. Position the distributor shaft in the cylinder block.
    b. Align the rotor tip with the scribe mark on the distributor housing during removal.

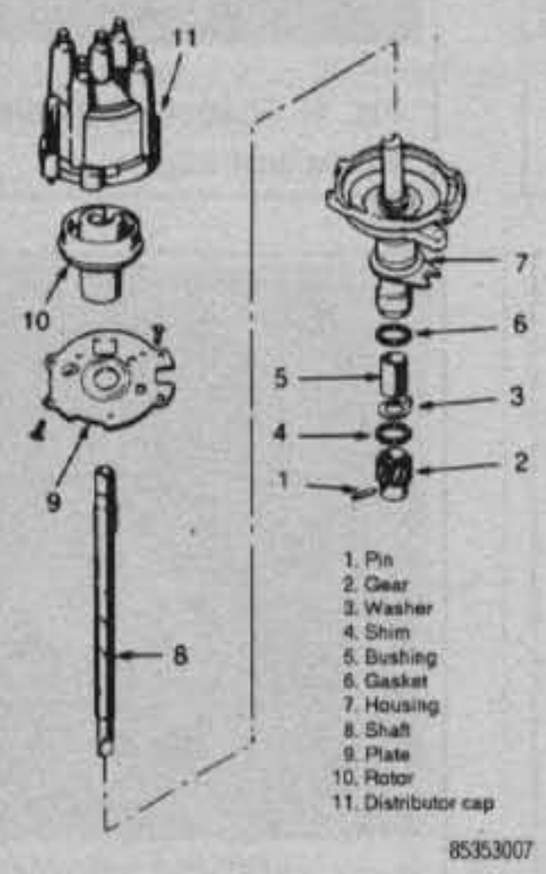

Fig. 7 Exploded view of the distributor—1987–90 2.5L engine

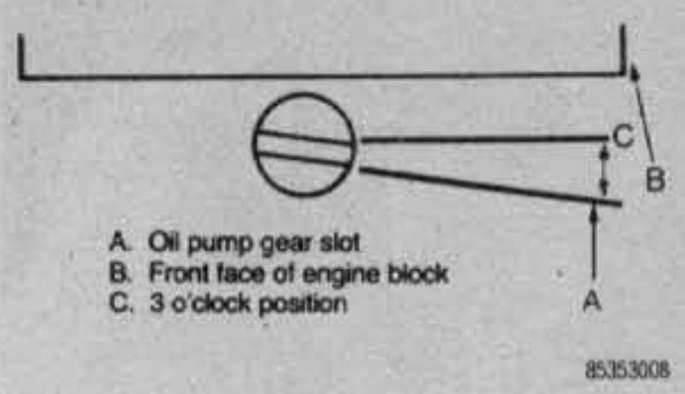

Fig. 8 Positioning the oil pump shaft for distributor installation—1987–90 2.5L engine

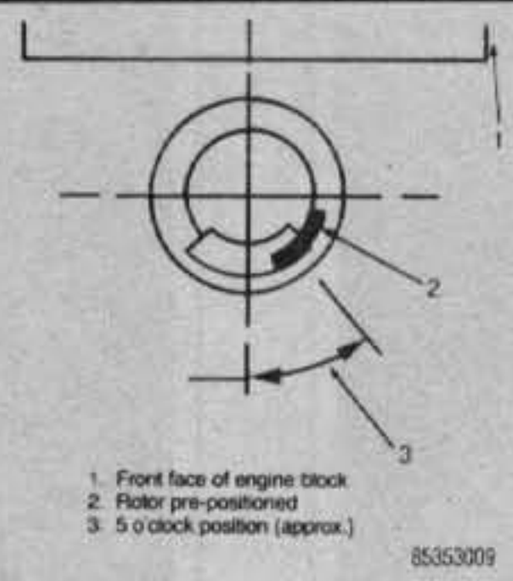

Fig. 9 Positioning the distributor rotor and shaft for installation—1987–90 2.5L engine

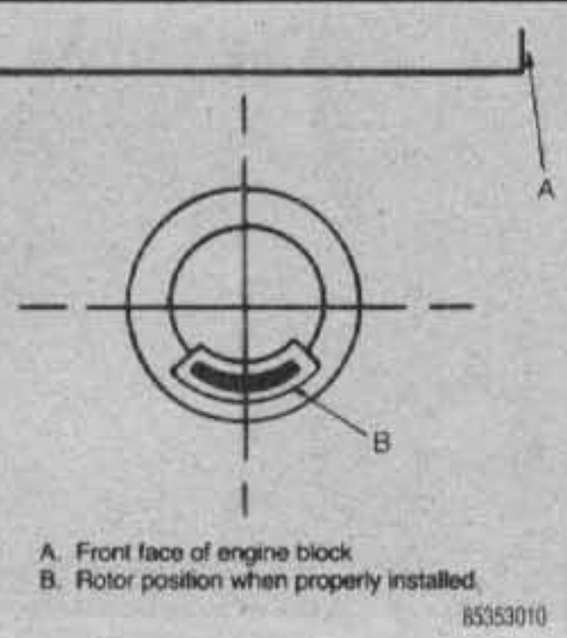

Fig. 10 Rotor position with the distributor properly installed—1987–90 2.5L engine

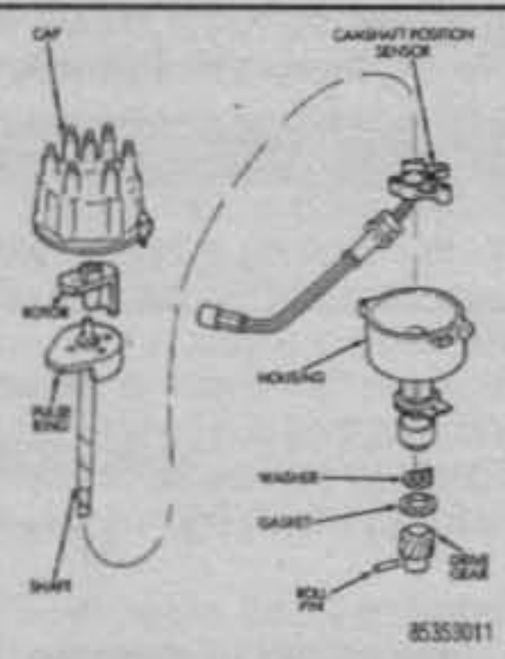

Fig. 11 Exploded view of the distributor—1991–95 2.5L engine

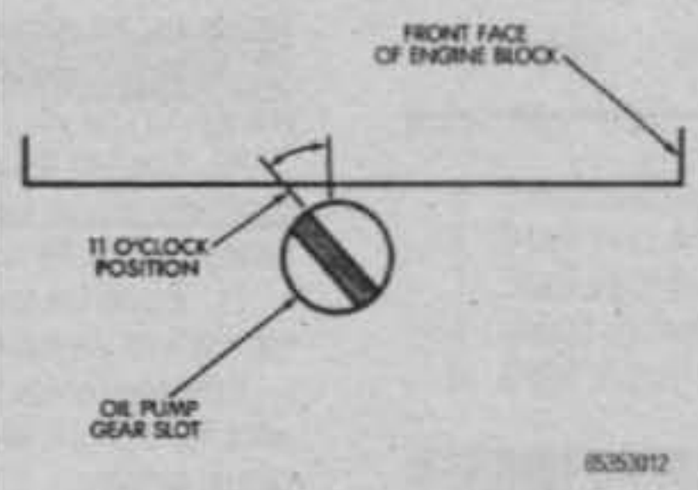

Fig. 12 Align the oil pump gear slot—1991–95 2.5L engine

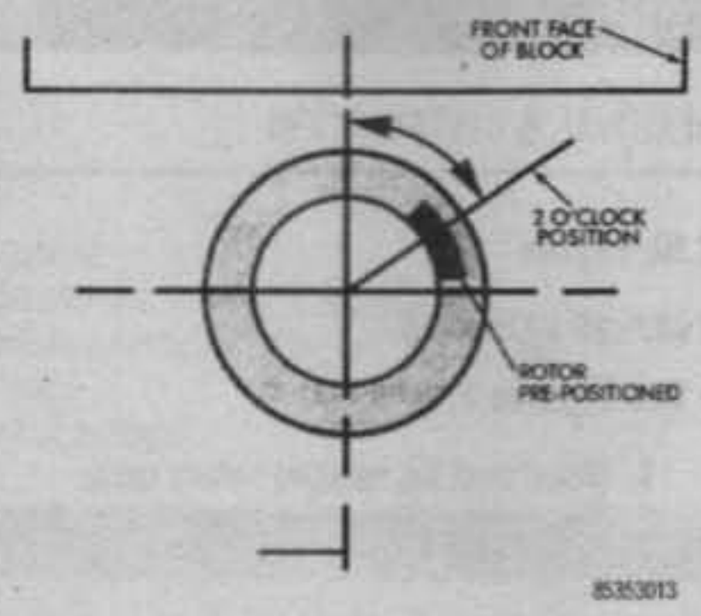

Fig. 13 Distributor installation—1991–95 2.5L engine

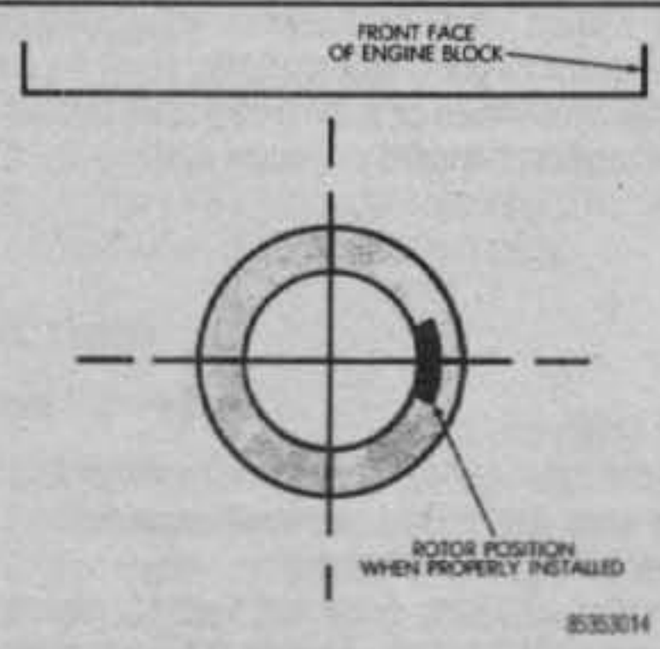

Fig. 14 Rotor position with the distributor properly installed—1991–95 2.5L engine

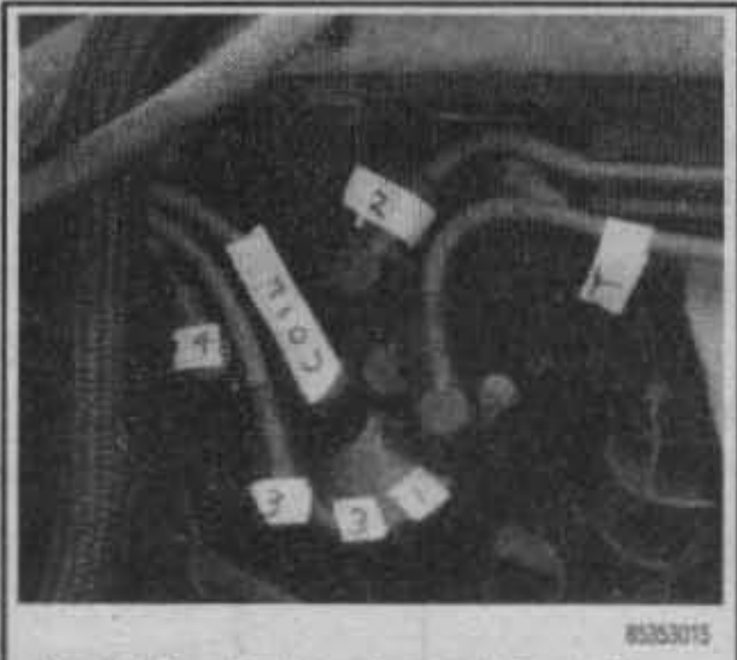

Fig. 15 Number the wires and cap with tape for reference purposes

Fig. 16 Disconnect the distributor primary wiring connector

Fig. 17 Unfasten the distributor cap retaining screws

Fig. 18 Removing the distributor cap

Fig. 19 Scribe a mark on the distributor housing in line with the tip of the rotor

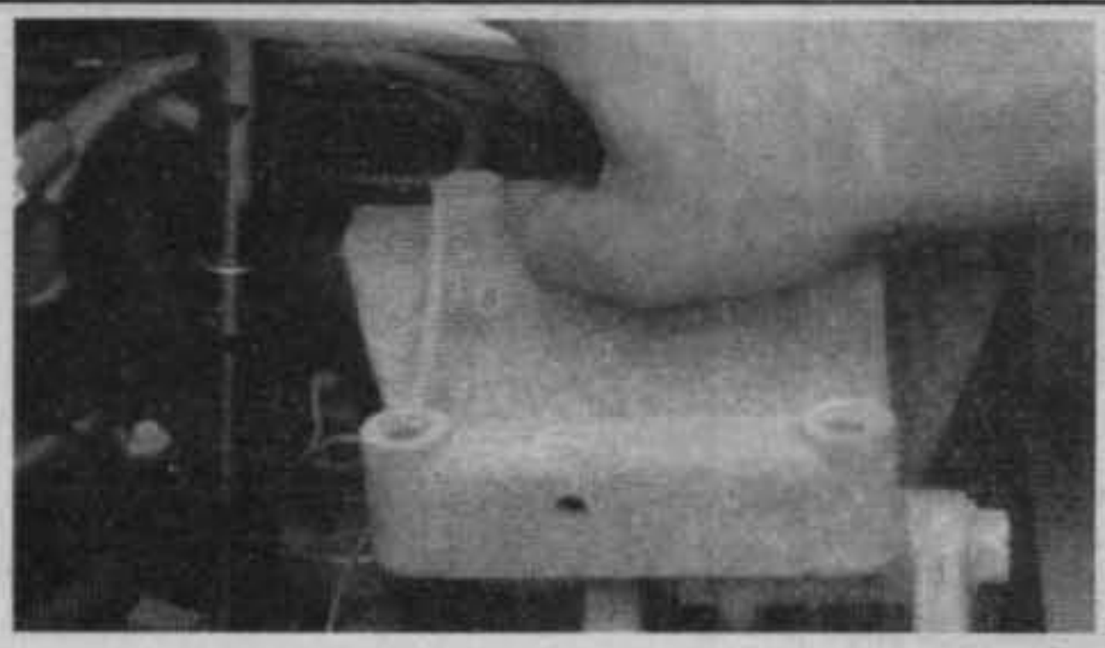

Fig. 20 Remove the distributor hold-down bolt and clamp

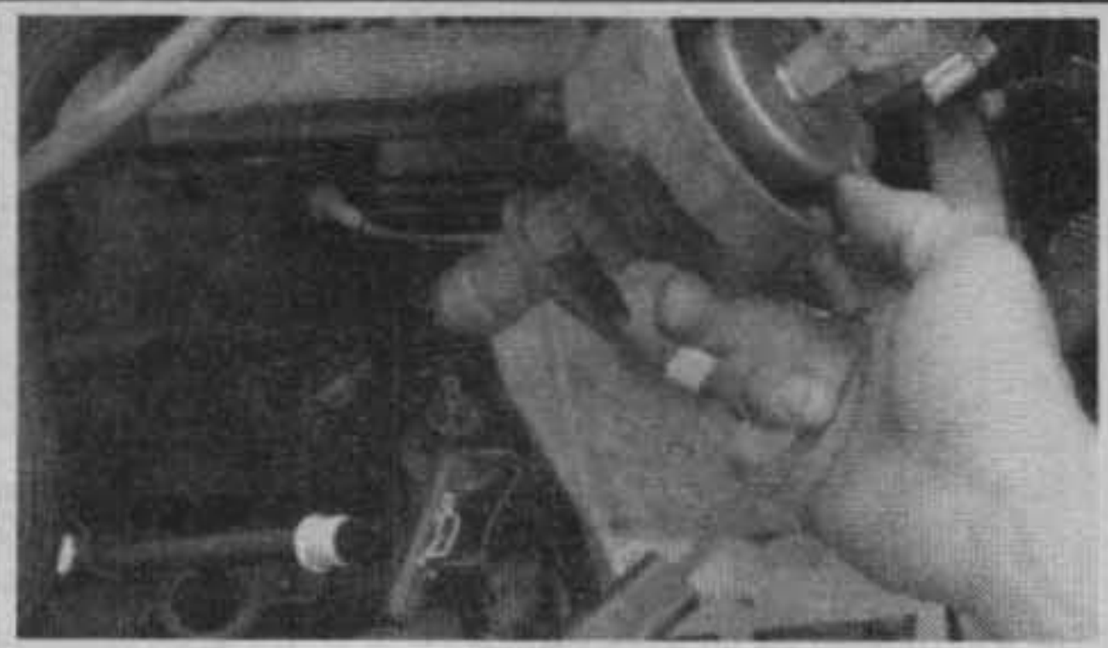

Fig. 21 Lift the distributor straight up and out of the engine

c. Turn the rotor approximately ⅛ turn counterclockwise past the scribe mark.

WARNING

Make sure that the distributor shaft fully engages the oil pump drive gear shaft. It may be necessary to slightly rotate ("bump") the engine. This is done while applying downward force on the distributor body. It should fully engage the distributor shaft with the oil pump drive gear shaft.

d. Slide the distributor shaft down into the engine.

➡It may be necessary to move the rotor and shaft (slightly) to engage the distributor shaft with the slot in the oil pump shaft. the same may have to be done to engage the distributor gear with the camshaft gear. However, the rotor should align with the scribe mark when the distributor shaft is down in place.

To install, If engine was disturbed:

11. Remove the No. 1 spark plug.
12. Hold a finger over the spark plug hole and rotate the engine until compression pressure is felt. Slowly continue to rotate the engine until the timing index on the vibration damper pulley aligns the Top Dead Center (TDC) mark (0 degree) on the timing degree scale.

➡Always rotate the engine in the direction of normal rotation. Do not turn the engine backward to align the timing marks.

13. Using a flat blade screwdriver, rotate the oil pump gear to position the slot in the oil pump shaft slightly before the 11 o'clock position.

➡With the distributor cap removed, install the distributor with the rotor located just past the 2 o'clock position.

14. With the distributor fully engaged in its correct position, the rotor should be just past the 3 o'clock position.
15. Install the spark plug and cable.

WARNING

If the distributor cap is incorrectly positioned on the distributor housing, the cap or rotor may be damaged when the engine is started.

16. Install the distributor clamp and hold-down bolts. Torque the bolt to 17 ft. lbs. (23 Nm).
17. Install the distributor cap with the cables on the distributor housing. Ensure the cap fits securely on the rim of the distributor housing.
18. Connect the distributor primary wiring connector.

4.0L Engine

See Figures 22 thru 27

The distributor contains an internal oil seal that prevents oil from entering the distributor housing. The seal is not serviceable.

1. Disconnect the negative battery cable.
2. If equipped with A/C, removing the cooling fan and shroud to gain access to the vibration damper bolt.
3. Label and remove the high tension wires from the distributor cap.
4. Remove the primary lead from the terminal post at the side of the distributor.
5. Turn the engine clockwise, using a socket on the end of the crankshaft damper bolt, until the rotor is pointing to the No. 1 spark plug wire post and the timing mark on the damper aligns with the **0** on the timing scale; No. 1 cylinder is at TDC on the compression stroke.

➡The timing mark is on the edge of the vibration damper, closest to the front engine cover.

6. Remove the distributor cap. Scribe a mark on the base of the distributor and the engine as an installation reference. Note the position of the rotor and

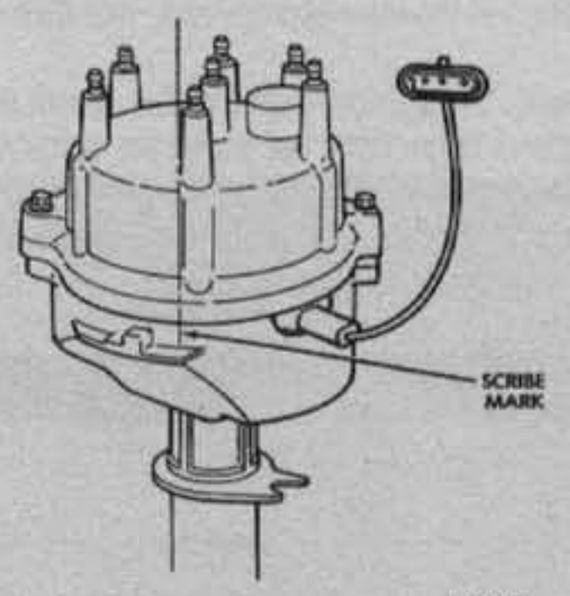

Fig. 22 Mark the distributor housing—1991–95 4.0L engine

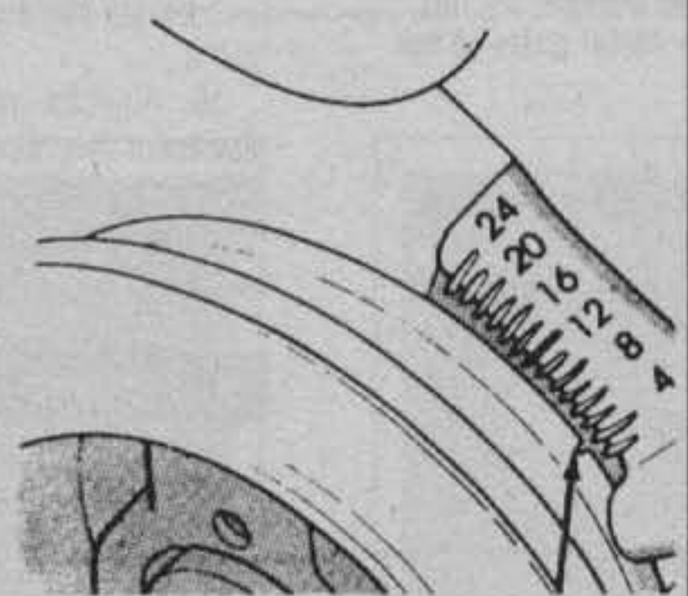

Fig. 23 Align the timing marks—1991–95 4.0L engine

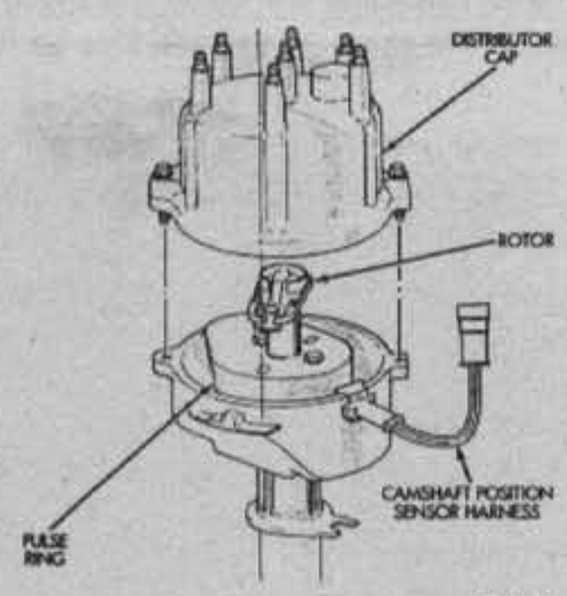

Fig. 24 Align the rotor trailing edge with the scribe mark—1991–95 4.0L engine

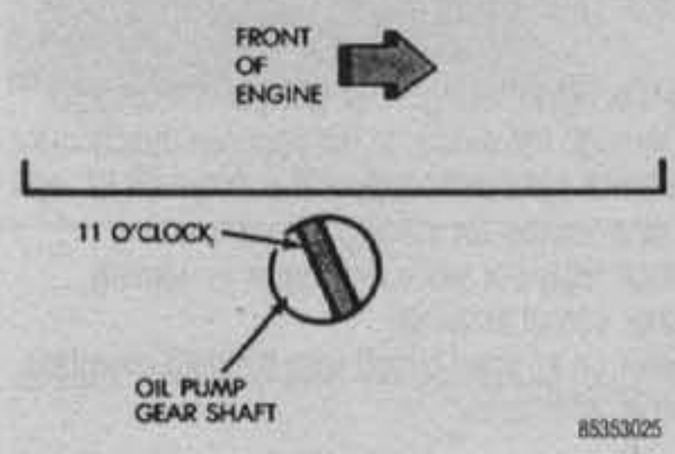

Fig. 25 Align the oil pump gear shaft—1991–95 4.0L engine

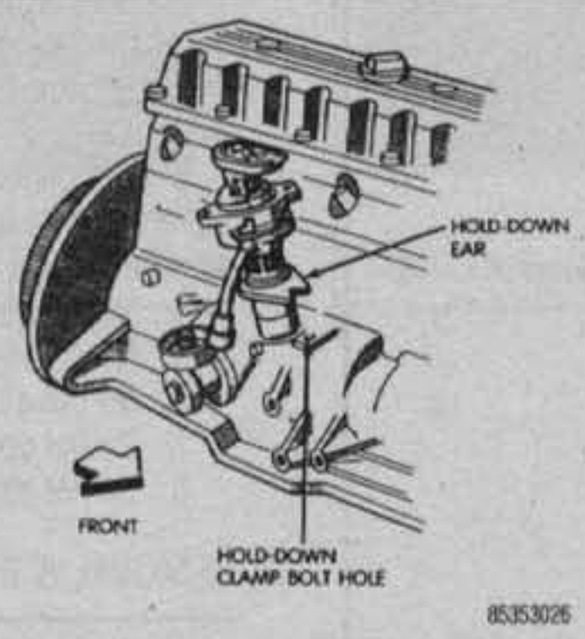

Fig. 26 Distributor hold-down—1991–95 4.0L engine

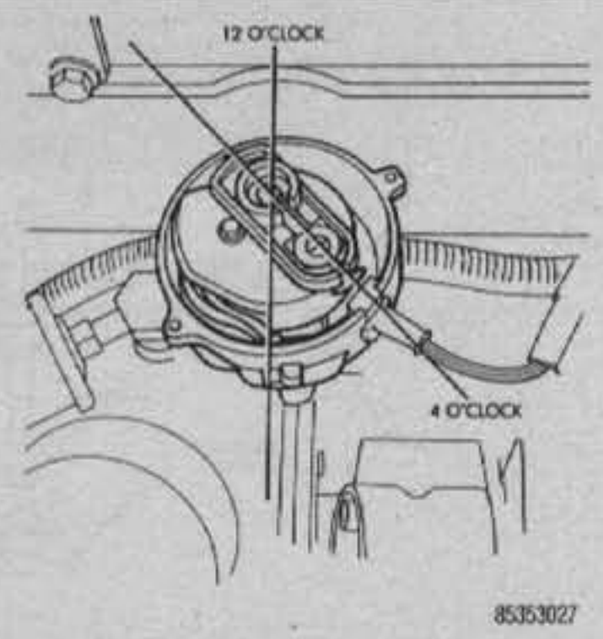

Fig. 27 Rotor alignment—1991–95 4.0L engine

distributor, align the trailing edge of the rotor blade with the scribe mark on the distributor housing.

7. Remove the bolt for the distributor hold-down clamp.
8. Remove the distributor from the engine.

To install:

9. Using a flat bladed tool, turn the oil pump gear shaft, located in the distributor mounting hole, until the slot is slightly past the 11 o'clock position.
10. Install the rotor.
11. Without engaging the distributor gear into the cam gear, position the distributor into the hole in the engine block.
12. Visually line up the hold-down ear of the distributor housing with the hold-down clamp hole.
13. Turn the rotor to the 4 o'clock position.
14. Slide the distributor into the block until it seats keeping the hold-down ear aligned with the hole in the block.

➡The rotor should be in the 5 o'clock position with the trailing edge of the rotor blade lined up with the No. 1 spark plug post position.

15. Install the hold-down clamp and torque the bolt to 17 ft. lbs. (23 Nm).
16. Install the distributor cap.
17. Connect the distributor electrical connector.
18. If removed, install the cooling fan and shroud.
19. Connect the battery cable.

4.2L Engine

▶ See Figure 28

1. Remove the high-tension wires from the distributor cap terminal towers, noting their positions to assure correct reassembly. For diagrams of firing orders and distributor wiring, refer to the tune-up and troubleshooting section.
2. Remove the primary lead from the terminal post at the side of the distributor.

➡The wire connector will contain a special conductive grease. Do not remove it. The same grease will also be found on the metal parts of the rotor.

3. Disconnect the vacuum line if there is one.
4. Remove the two distributor cap retaining hooks or screws and remove the distributor cap.
5. Note the position of the rotor in relation to the base. Scribe a mark on the base of the distributor and on the engine block to facilitate reinstallation. Align the marks with the direction the metal tip of the rotor is pointing.
6. Remove the bolt that holds the distributor to the engine.
7. Lift the distributor assembly from the engine.

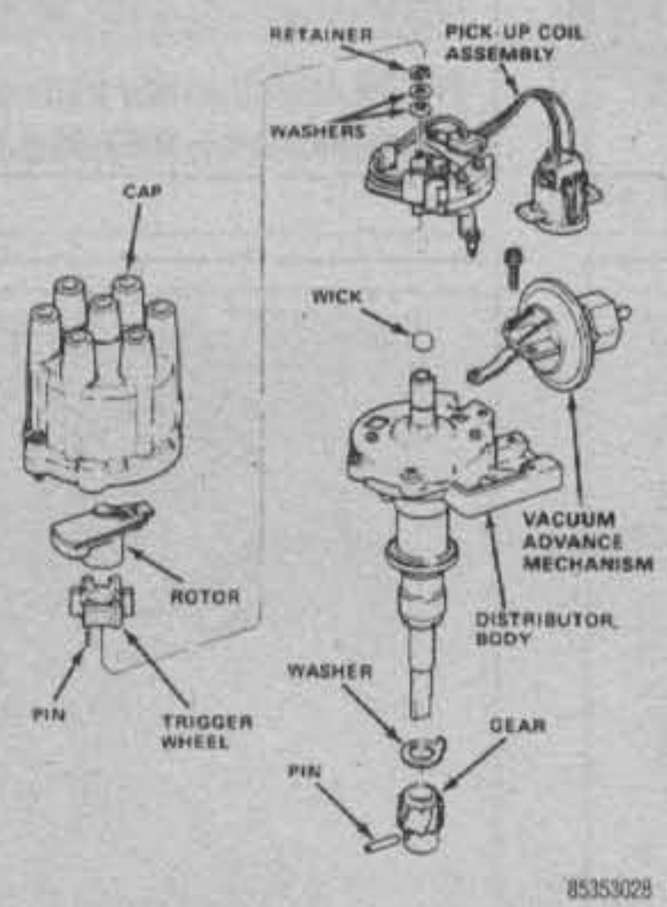

Fig. 28 Exploded view of the distributor—1987–90 4.2L engine

To install, if engine was not disturbed:

8. Insert the distributor shaft and assembly into the engine. Line up the mark on the distributor and the one on the engine with the metal tip of the rotor. Make sure that the vacuum advance diaphragm is pointed in the same direction as it was pointed originally. This will be done automatically if the marks on the engine and the distributor are line up with the rotor.
9. Install the distributor hold-down bolt and clamp. Leave the screw loose enough so that you can move the distributor with heavy hand pressure.
10. Connect the primary wire to the distributor side of the coil. Install the distributor cap on the distributor housing. Secure the distributor cap with the spring clips or the screw type retainers, whichever is used.
11. Install the spark plug wires. Make sure that the wires are pressed all of the way into the top of the distributor cap and firmly onto the spark plugs.
12. Adjust the point cam dwell and set the ignition timing. Refer to Section 2.

If the engine was turned while the distributor was removed, or if the marks were not drawn, it will be necessary to initially time the engine. Follow the procedure below.

To install, if engine was disturbed:

13. If the engine has been rotated while the distributor was out, you'll have to first put the engine on No. 1 cylinder at Top Dead Center firing position. You can either remove the valve cover or No. 1 spark plug to determine engine position. Rotate the engine with a socket wrench on the nut at the center of the front pulley in the normal direction of rotation. Either feel for air being expelled forcefully through the spark plug hole or watch for the engine to rotate up to the Top Center mark without the valves moving (both valves will be closed).
14. Start the distributor into the engine with the matchmarks between the distributor body and the engine lined up. Turn the rotor slightly until the matchmarks on the bottom of the distributor body and the bottom of the distributor shaft near the gear are aligned.
15. Insert the distributor all the way into the engine. If you have trouble getting the distributor and camshaft gears to mesh, turn the rotor back and forth very slightly until the distributor can be inserted easily. If the rotor is not now lined up with the position of No. 1 plug terminal, you'll have to pull the distributor back out slightly, shift the position of the rotor appropriately, and then reinstall it.
16. Align the matchmarks between the distributor and engine. Install the distributor mounting bolt and tighten it finger tight. Reconnect the vacuum advance line and distributor wiring connector, and reinstall the gasket and cap. Reconnect the negative battery cable. Adjust the ignition timing as described in Section 2. Then, tighten the distributor mounting bolt securely.

Alternator

ALTERNATOR PRECAUTIONS

To prevent damage to the alternator and regulator, the following precautionary measures must be taken when working with the electrical system.

1. Never reverse battery connections. Always check the battery polarity visually. This is to be done before any connections are made to be sure that all of the connections correspond to the battery ground polarity of the Jeep.
2. Booster batteries for starting must be connected properly. Make sure that the positive cable of the booster battery is connected to the positive terminal of the battery that is getting the boost. This applies to both negative and ground cables.
3. Disconnect the battery cables before using a fast charger. The charger has a tendency to force current through the diodes in the opposite direction for which they were designed. This burns out the diodes.
4. Never use a fast charger as a booster for starting the vehicle.
5. Never disconnect the voltage regulator while the engine is running.
6. Do not ground the alternator output terminal.
7. Do not operate the alternator on an open circuit with the field energized.
8. Do not attempt to polarize an alternator.

REMOVAL & INSTALLATION

1. Remove all of the electrical connections from the alternator. Label all of the wires so that you can install them correctly.

2. Remove all of the attaching nuts, bolts and washers noting different sized threads or nuts and bolts that go in certain holes.
3. Remove the alternator carefully.
4. To install, reverse the above procedure and adjust the belt as described below. Torque the mounting bolts to 25–30 ft. lbs. (34–40.8 Nm); the sliding adjuster bolt to 20 ft. lbs. (27 Nm).

BELT TENSION ADJUSTMENT

Please refer to Section 1.

Regulator

The voltage regulator unit is attached inside the rear housing of the alternator. The voltage regulator is not adjustable or repairable.

Starter

REMOVAL & INSTALLATION

See Figures 29, 30, 31, 32 and 33

1. Disconnect the battery ground.
2. Raise and safely support the vehicle on jackstands.
3. Remove all wires from the starter and tag them for installation.
4. Remove all but one upper attaching bolt. Support the starter (it's heavier than it looks), then remove the last bolt.
5. Pull the starter from the engine.
6. Installation is the reverse of removal. Torque the mounting bolts to:
- 2.5L Engine: 33 ft. lbs. (45 Nm)
- 4.0L Engine: upper: 40 ft. lbs. (54 Nm); lower: 30 ft. lbs. (40 Nm)
- 4.2L Engine: 33 ft. lbs. (45 Nm)

85353029

Fig. 29 You can use a small box wrench to loosen the nut securing the wire to the starter motor solenoid terminal

85353031

Fig. 30 The larger nut (retaining the positive battery cable) may require a socket wrench

85353030

Fig. 31 Disconnect the wire and cable from the starter motor solenoid terminals

85353032

Fig. 32 Removing the starter outside mounting bolt

85353033

Fig. 33 Removing the starter inside mounting bolt

GENERAL ENGINE SPECIFICATIONS

Year	Engine ID/VIN	Engine Displacement Liters (cc)	Fuel System Type	Net Horsepower @ rpm	Net Torque @ rpm (ft. lbs.)	Bore × Stroke (in.)	Compression Ratio	Oil Pressure @ rpm
1987	H	2.5 (2458)	TBI	83 @ 4200	116 @ 2600	3.876 × 3.188	9.2:1	40 @ 2000
	C	4.2 (4228)	2 bbl	112 @ 3000	210 @ 1800	3.750 × 3.895	8.0:1	37 @ 2000
1988	H	2.5 (2458)	TBI	83 @ 4200	116 @ 2600	3.876 × 3.188	9.2:1	40 @ 2000
	C	4.2 (4228)	2 bbl	112 @ 3000	210 @ 1800	3.750 × 3.895	8.0:1	37 @ 2000
1989	E	2.5 (2458)	TBI	121 @ 5250	141 @ 3250	3.876 × 3.188	9.2:1	37 @ 1600 ①
	M	4.2 (4228)	2 bbl	112 @ 3000	210 @ 1800	3.750 × 3.895	9.2:1	37 @ 1600 ①
1990	E	2.5 (2458)	TBI	112 @ 5250	141 @ 3250	3.876 × 3.188	9.2:1	37 @ 1600 ①
	T	4.2 (4228)	2 bbl	112 @ 3000	210 @ 1800	3.750 × 3.895	9.2:1	37 @ 1600 ①.
1991	P	2.5 (2458)	MFI	123 @ 5250	139 @ 3250	3.876 × 3.188	9.1:1	37 @ 1600 ①
	S	4.0 (3966)	MFI	180 @ 4750	220 @ 2500	3.880 × 3.440	8.8:1	37 @ 1600 ①
1992	P	2.5 (2458)	MFI	123 @ 5250	139 @ 3250	3.876 × 3.188	9.1:1	37 @ 1600 ①
	S	4.0 (3966)	MFI	180 @ 4750	220 @ 2500	3.880 × 3.440	8.8:1	37 @ 1600 ①
1993	P	2.5 (2458)	MFI	130 @ 5250	139 @ 3250	3.876 × 3.188	9.1:1	37 @ 1600
	S	4.0 (3966)	MFI	180 @ 4750	220 @ 2500	3.880 × 3.440	8.8:1	37 @ 1600
1994–95	P	2.5 (2458)	MFI	130 @ 5250	139 @ 3250	3.876 × 3.188	9.1:1	37 @ 1600 ①
	S	4.0 (3966)	MFI	180 @ 4750	220 @ 2500	3.880 × 3.440	8.8:1	37 @ 1600 ①

NOTE: Horsepower and torque are SAE net figures. They are measured at the rear of the transmission with all accessories installed and operating. Since the figures vary when a given engine is installed in different models, some are representative rather than exact.

① Above 1600 rpm, pressure can vary to a maximum of 75 psi.

② Above 3000 rpm, pressure can vary to a maximum of 80 psi.

85353C01

VALVE SPECIFICATIONS

Year	Engine ID/VIN	Engine Displacement Liters (cc)	Seat Angle (deg.)	Face Angle (deg.)	Spring Test Pressure (lbs. @ in.)	Spring Installed Height (in.)	Stem-to-Guide Clearance (in.)		Stem Diameter (in.)	
							Intake	Exhaust	Intake	Exhaust
1987	H	2.5 (2458)	45	45	200 @ 1.216	1.640	0.0010–0.0030	0.0010–0.0030	0.3110–0.3120	0.3110–0.3120
	C	4.2 (4228)	①	②	195 @ 1.411	1.786	0.0010–0.0030	0.0010–0.0030	0.3715–0.3725	0.3715–0.3725
1988	H	2.5 (2458)	45	45	200 @ 1.216	1.640	0.0010–0.0030	0.0010–0.0030	0.3110–0.3120	0.3110–0.3120
	C	4.2 (4228)	①	②	195 @ 1.411	1.786	0.0010–0.0030	0.0010–0.0030	0.3715–0.3725	0.3715–0.3725
1989	E	2.5 (2458)	45	45	200 @ 1.216	1.640	0.0010–0.0030	0.0010–0.0030	0.3110–0.3120	0.3110–0.3120
	M	4.2 (4228)	①	②	195 @ 1.411	1.786	0.0010–0.0030	0.0010–0.0030	0.3715–0.3725	0.3715–0.3725
1990	E	2.5 (2458)	45	45	200 @ 1.216	1.640	0.0010–0.0030	0.0010–0.0030	0.3110–0.3120	0.3110–0.3120
	T	4.2 (4228)	①	②	195 @ 1.411	1.786	0.0010–0.0030	0.0010–0.0030	0.3715–0.3725	0.3715–0.3725
1991	P	2.5 (2458)	44.5	45	200 @ 1.216	1.640	0.0010–0.0030	0.0010–0.0030	0.3110–0.3120	0.3110–0.3120
	S	4.0 (3966)	44.5	45	210 @ 1.200	1.625	0.0010–0.0030	0.0010–0.0030	0.3110–0.3120	0.3110–0.3120
1992	P	2.5 (2458)	44.5	45	200 @ 1.216	1.640	0.0010–0.0030	0.0010–0.0030	0.3110–0.3120	0.3110–0.3120
	S	4.0 (3966)	44.5	45	210 @ 1.200	1.625	0.0010–0.0030	0.0010–0.0030	0.3110–0.3120	0.3110–0.3120
1993	P	2.5 (2458)	44.5	45	200 @ 1.216	1.640	0.0010–0.0030	0.0010–0.0030	0.3110–0.3120	0.3110–0.3120
	S	4.0 (3966)	44.5	45	210 @ 1.200	1.625	0.0010–0.0030	0.0010–0.0030	0.3110–0.3120	0.3110–0.3120
1994–95	P	2.5 (2458)	44.5	45	200 @ 1.216	1.640	0.0010–0.0030	0.0010–0.0030	0.3110–0.3120	0.3110–0.3120
	S	4.0 (3966)	44.5	45	210 @ 1.200	1.625	0.0010–0.0030	0.0010–0.0030	0.3110–0.3120	0.3110–0.3120

① Intake: 30 degrees
Exhaust: 44.5 degrees

② Intake: 29 degrees
Exhaust: 44 degrees

85353C02

CAMSHAFT SPECIFICATIONS

All measurements given in inches.

Year	Engine ID/VIN	Engine Displacement Liters (cc)	Journal Diameter 1	2	3	4	5	Elevation In.	Ex.	Bearing Clearance	Camshaft End-Play
1987	U	2.5 (2458)	2.0300-2.0290	2.0200-2.0190	2.1000-2.0090	2.0000-1.9990	—	0.2650	0.2650	0.0010-0.0030	0
	C	4.2 (4228)	2.0300-2.0290	2.0200-2.0190	2.1000-2.0090	2.0000-1.9990	—	0.2531	0.2531	0.0010-0.0030	0
1988	H	2.5 (2458)	2.0300-2.0290	2.0200-2.0190	2.1000-2.0090	2.0000-1.9990	—	0.2650	0.2650	0.0010-0.0030	0
	C	4.2 (4228)	2.0300-2.0290	2.0200-2.0190	2.1000-2.0090	2.0000-1.9990	—	0.2531	0.2531	0.0010-0.0030	0
1989	E	2.5 (2458)	2.0300-2.0290	2.0200-2.0190	2.1000-2.0090	2.0000-1.9990	—	0.2650	0.2650	0.0010-0.0030	0
	M	4.2 (4228)	2.0300-2.0290	2.0200-2.0190	2.1000-2.0090	2.0000-1.9990	—	0.2531	0.2531	0.0010-0.0030	0
1990	E	2.5 (2458)	2.0300-2.0290	2.0200-2.0190	2.1000-2.0090	2.0000-1.9990	—	0.2650	0.2650	0.0010-0.0030	0
	T	4.2 (4228)	2.0300-2.0290	2.0200-2.0190	2.1000-2.0090	2.0000-1.9990	—	0.2531	0.2531	0.0010-0.0030	0
1991	P	2.5 (2458)	2.0300-2.0290	2.0200-2.0190	2.1000-2.0090	2.0000-1.9990	—	0.2650	0.2650	0.0010-0.0030	0
	S	4.0 (3996)	2.0300-2.0290	2.0200-2.0190	2.1000-2.0090	2.0000-1.9990	—	0.2530	0.2530	0.0010-0.0030	0
1992	P	2.5 (2458)	2.0300-2.0290	2.0200-2.0190	2.1000-2.0090	2.0000-1.9990	—	0.2650	0.2650	0.0010-0.0030	0
	S	4.0 (3996)	2.0300-2.0290	2.0200-2.0190	2.1000-2.0090	2.0000-1.9990	—	0.2530	0.2530	0.0010-0.0030	0
1993	P	2.5 (2458)	2.0300-2.0290	2.0200-2.0190	2.1000-2.0090	2.0000-1.9990	—	0.2650	0.2650	0.0010-0.0030	0
	S	4.0 (3996)	2.0300-2.0290	2.0200-2.0190	2.1000-2.0090	2.0000-1.9990	—	0.2530	0.2530	0.0010-0.0030	0
1994-95	P	2.5 (2458)	2.0300-2.0290	2.0200-2.0190	2.1000-2.0090	2.0000-1.9990	—	0.2650	0.2650	0.0010-0.0030	0
	S	4.0 (3996)	2.0300-2.0290	2.0200-2.0190	2.1000-2.0090	2.0000-1.9990	—	0.2530	0.2530	0.0010-0.0030	0

85353C04

CRANKSHAFT AND CONNECTING ROD SPECIFICATIONS

All measurements are given in inches.

Year	Engine ID/VIN	Engine Displacement Liters (cc)	Crankshaft: Main Brg. Journal Dia.	Main Brg. Oil Clearance	Shaft End-play	Thrust on No.	Connecting Rod: Journal Diameter	Oil Clearance	Side Clearance
1987	H	2.5 (2458)	2.4996-2.5001	0.0010-0.0025	0.0015-0.0065	2	2.0934-2.0955	0.0010-0.0025	0.0100-0.0190
	C	4.2 (4228)	2.4996-2.5001	0.0010-0.0025	0.0015-0.0065	3	2.0934-2.0955	0.0010-0.0030	0.0100-0.0190
1988	H	2.5 (2458)	2.4996-2.5001	0.0010-0.0025	0.0015-0.0065	2	2.0934-2.0955	0.0010-0.0025	0.0100-0.0190
	C	4.2 (4228)	2.4996-2.5001	0.0010-0.0025	0.0015-0.0065	3	2.0934-2.0955	0.0010-0.0030	0.0100-0.0190
1989	E	2.5 (2458)	2.4996-2.5001	0.0010-0.0025	0.0015-0.0065	2	2.0934-2.0955	0.0010-0.0025	0.0100-0.0190
	M	4.2 (4228)	2.4996-2.5001	0.0010-0.0025	0.0015-0.0065	3	2.0934-2.0955	0.0010-0.0025	0.0100-0.0190
1990	E	2.5 (2458)	2.4996-2.5001	0.0010-0.0025	0.0015-0.0065	2	2.0934-2.0955	0.0010-0.0025	0.0100-0.0190
	T	4.2 (4228)	2.4996-2.5001	0.0010-0.0025	0.0015-0.0065	3	2.0934-2.0955	0.0010-0.0025	0.0100-0.0190
1991	P	2.5 (2458)	2.4996-2.5001	0.0010-0.0025	0.0015-0.0065	2	2.0934-2.0955	0.0010-0.0025	0.0100-0.0190
	S	4.0 (3966)	2.4996-2.5001	0.0010-0.0025	0.0015-0.0065	3	2.0934-2.0955	0.0010-0.0025	0.0100-0.0190
1992	P	2.5 (2458)	2.4996-2.5001	0.0010-0.0025	0.0015-0.0065	2	2.0934-2.0955	0.0010-0.0025	0.0100-0.0190
	S	4.0 (3966)	2.4996-2.5001	0.0010-0.0025	0.0015-0.0065	3	2.0934-2.0955	0.0010-0.0025	0.0100-0.0190
1993	P	2.5 (2458)	2.4996-2.5001	0.0010-0.0025	0.0015-0.0065	2	2.0934-2.0955	0.0010-0.0025	0.0100-0.0190
	S	4.0 (3966)	2.4996-2.5001	0.0010-0.0025	0.0015-0.0065	3	2.0934-2.0955	0.0010-0.0025	0.0100-0.0190
1994-95	P	2.5 (2458)	2.4996-2.5001	0.0010-0.0025	0.0015-0.0065	2	2.0934-2.0955	0.0010-0.0025	0.0100-0.0190
	S	4.0 (3966)	2.4996-2.5001①	0.0010-0.0025	0.0015-0.0065	3	2.0934-2.0955	0.0010-0.0025	0.0100-0.0190

① No. 7: 2.4980-2.4995

85353C05

PISTON AND RING SPECIFICATIONS

All measurements are given in inches.

Year	Engine ID/VIN	Engine Displacement Liters (cc)	Piston Clearance	Ring Gap			Ring Side Clearance		
				Top Compression	Bottom Compression	Oil Control	Top Compression	Bottom Compression	Oil Control
1987	H	2.5 (2458)	0.0013-0.0021	0.0100-0.0200	0.0100-0.0200	0.0150-0.0550	0.0010-0.0032	0.0010-0.0032	0.0010-0.0021
	C	4.2 (4228)	0.0009-0.0017	0.0100-0.0200	0.0100-0.0200	0.0100-0.0250	0.0015-0.0030	0.0015-0.0030	0.0010-0.008
1988	H	2.5 (2458)	0.0013-0.0021	0.0100-0.0200	0.0100-0.0200	0.0150-0.0550	0.0010-0.0032	0.0010-0.0032	0.0010-0.0021
	C	4.2 (4228)	0.0009-0.0017	0.0100-0.0200	0.0100-0.0200	0.0100-0.0250	0.0015-0.0030	0.0015-0.0030	0.0010-0.008
1989	E	2.5 (2458)	0.0013-0.0021	0.0100-0.0200	0.0100-0.0200	0.0150-0.0550	0.0010-0.0032	0.0010-0.0032	0.0010-0.0021
	M	4.2 (4228)	0.0009-0.0017	0.0100-0.0200	0.0100-0.0200	0.0100-0.0250	0.0015-0.0030	0.0015-0.0030	0.0010-0.008
1990	E	2.5 (2458)	0.0013-0.0021	0.0100-0.0200	0.0100-0.0200	0.0150-0.0550	0.0010-0.0032	0.0010-0.0032	0.0010-0.0021
	M	4.2 (4228)	0.0009-0.0017	0.0100-0.0200	0.0100-0.0200	0.0100-0.0250	0.0015-0.0030	0.0015-0.0030	0.0010-0.008
1991	P	2.5 (2458)	0.0013-0.0021	0.0100-0.0200	0.0100-0.0200	0.0150-0.0550	0.0010-0.0032	0.0010-0.0032	0.0010-0.0021
	S	4.0 (3966)	0.0013-0.0017	0.0100-0.0200	0.0100-0.0200	0.0100-0.0250	0.0017-0.0032	0.0017-0.0032	0.0010-0.008
1992	P	2.5 (2458)	0.0013-0.0021	0.0100-0.0200	0.0100-0.0200	0.0150-0.0550	0.0010-0.0032	0.0010-0.0032	0.0010-0.0021
	S	4.0 (3966)	0.0009-0.0017	0.0100-0.0200	0.0100-0.0200	0.0100-0.0250	0.0017-0.0032	0.0017-0.0032	0.0010-0.0080
1993	P	2.5 (2458)	0.0013-0.0021	0.0100-0.0200	0.0100-0.0200	0.0150-0.0550	0.0010-0.0032	0.0010-0.0032	0.0010-0.0021
	S	4.0 (3966)	0.0013-0.0017	0.0100-0.0200	0.0100-0.0200	0.0100-0.0250	0.0017-0.0032	0.0017-0.0032	0.0010-0.0080
1994-95	P	2.5 (2458)	0.0013-0.0021	0.0100-0.0200	0.0100-0.0200	0.0150-0.0550	0.0010-0.0032	0.0010-0.0032	0.0010-0.0021
	S	4.0 (3966)	0.0013-0.0017	0.0100-0.0200	0.0100-0.0200	0.0100-0.0250	0.0017-0.0032	0.0017-0.0032	0.0010-0.0080

85353C07

TORQUE SPECIFICATIONS

All readings in ft. lbs.

Year	Engine ID/VIN	Engine Displacement Liters (cc)	Cylinder Head Bolts	Main Bearing Bolts	Rod Bearing Bolts	Crankshaft Damper Bolts	Flywheel Bolts	Manifold		Spark Plugs	Lug Nut
								Intake	Exhaust		
1987	H	2.5 (2458)	①	80	33	75-85	50②	③	30	27	80-110
	C	4.2 (4229)	85	75-85	30-35	75-85	100-110	20-25	④	28	80-110
1988	H	2.5 (2458)	①	80	33	75-85	50②	③	30	27	80-110
	C	4.2 (4229)	85	75-85	30-35	75-85	100-110	20-25	④	28	80-110
1989	E	2.5 (2458)	①	80	33	75-85	50②	③	30	27	80-110
	M	4.2 (4229)	85	75-85	30-35	75-85	100-110	20-25	④	28	80-110
1990	E	2.5 (2458)	①	80	33	80	50②	③	30	27	80-110
	T	4.2 (4229)	85	80	33	75-85	100-110	23	④	28	80-110
1991	P	2.5 (2458)	①	80	33	80	50②	③	30	27	80-110
	S	4.0 (3966)	⑤	80	33	80	100-110	⑥	④	27	80-110
1992	P	2.5 (2458)	①	80	33	80	50②	③	30	27	80-110
	S	4.0 (3966)	⑤	80	33	80	105	⑥	④	27	80-110
1993	P	2.5 (2458)	①	80	33	80	50②	③	30	27	80-110
	S	4.0 (3966)	⑤	80	33	80	105	⑥	④	27	80-110
1994-95	P	2.5 (2458)	①	80	33	80	50②	③	30	27	80-110
	S	4.0 (3966)	⑤	80	33	80	105	⑥	④	27	80-110

① Step 1: 22 ft. lbs.
Step 2: 45 ft. lbs.
Step 3: Bolts 1-6: 110 ft. lbs.
Step 4: Bolt 7: 100 ft. lbs.
Step 5: Bolts 8-10: 110 ft. lbs.
② Plus 60 degrees
③ Bolts 1, 6 & 7: 30 ft. lbs.
Bolts 2-5: 23 ft. lbs.
④ Middle bolts: 30 ft. lbs.
Outer bolts: 23 ft. lbs.
⑤ Step 1: Torque all bolts to 22 ft. lbs.
Step 2: Torque all bolts to 45 ft. lbs.
Step 3: Torque bolts 1-10 and 12-14 to 110 ft. lbs.
Step 4: Torque bolt 11 to 100 ft. lbs.
⑥ Bolts 1-5 and 8-11: 24 ft. lbs.
Bolts 6, 7: 17 ft. lbs.

85353C09

Engine Overhaul Tips

Most engine overhaul procedures are fairly standard. In addition to specific parts replacement procedures and complete specifications for your individual engine, this section also is a guide to acceptable rebuilding procedures. Examples of standard rebuilding practices are shown and should be used along with specific details concerning your particular engine.

Competent and accurate machine shop services will ensure maximum performance, reliability and engine life.

In most instances it is more profitable for the do-it-yourself mechanic to remove, clean and inspect the component, buy the necessary parts and deliver these to a shop for actual machine work.

On the other hand, much of the rebuilding work (crankshaft, block, bearings, piston rods, and other components) is well within the scope of the do-it-yourself mechanic.

TOOLS

The tools required for an engine overhaul or parts replacement will depend on the depth of your involvement. With a few exceptions, they will be the tools found in a mechanic's tool kit (see Section 1). More in-depth work will require any or all of the following:

- a dial indicator (reading in thousandths) mounted on a universal base
- micrometers and telescope gauges
- jaw and screw-type pullers
- scraper
- valve spring compressor
- ring groove cleaner
- piston ring expander and compressor
- ridge reamer
- cylinder hone or glaze breaker
- Plastigage®
- engine stand

The use of most of these tools is illustrated in this section. Many can be rented for a one-time use from a local parts jobber or tool supply house specializing in automotive work.

Occasionally, the use of special tools is called for. See the information on Special Tools and Safety Notice in the front of this book before substituting another tool.

INSPECTION TECHNIQUES

Procedures and specifications are given in this section for inspecting, cleaning and assessing the wear limits of most major components. Other procedures such as Magnaflux® and Zyglo® can be used to locate material flaws and stress cracks. Magnaflux® is a magnetic process applicable only to ferrous materials. The Zyglo® process coats the material with a fluorescent dye penetrant and can be used on any material Check for suspected surface cracks can be more readily made using spot check dye. The dye is sprayed onto the suspected area, wiped off and the area sprayed with a developer. Cracks will show up brightly.

OVERHAUL TIPS

Aluminum has become extremely popular for use in engines, due to its low weight. Observe the following precautions when handling aluminum parts:

- Never hot tank aluminum parts (the caustic hot tank solution will eat the aluminum).
- Remove all aluminum parts (identification tag, etc.) from engine components prior to tanking.
- Always coat threads lightly with engine oil or antiseize compounds before installation, to prevent seizure.
- Never overtorque bolts or spark plugs especially in aluminum threads.

Stripped threads in a component can be repaired using any of several commercial repair kits (Heli-Coil®, Microdot®, Keenserts®, etc.).

When assembling the engine, any parts that will be subject to frictional contact must be prelubed, to provide lubrication at initial start-up. Any product specifically formulated for this purpose can be used, but engine oil is not recommended as a prelube.

When semi-permanent (locked, but removable) installation of bolts or nuts is desired, threads should be cleaned and coated with Loctite® or other similar, commercial non-hardening sealant.

REPAIRING DAMAGED THREADS

See Figures 34, 35, 36, 37 and 38

Several methods of repairing damaged threads are available. Heli-Coil® (shown here), Keenserts® and Microdot® are among the most widely used. All involve basically the same principle—drilling out stripped threads, tapping the hole and installing a prewound insert—making welding, plugging and oversize fasteners unnecessary.

Two types of thread repair inserts are usually supplied: a standard type for most Inch Coarse, Inch Fine, Metric Course and Metric Fine thread sizes and a spark lug type to fit most spark plug port sizes. Consult the individual manufacturer's catalog to determine exact applications. Typical thread repair kits will contain a selection of prewound threaded inserts, a tap (corresponding to the outside diameter threads of the insert) and an installation tool. Spark plug inserts usually differ because they require a tap equipped with pilot threads and a combined reamer/tap section. Most manufacturers also supply blister-packed thread repair inserts separately in addition to a master kit containing a variety of taps and inserts plus installation tools.

Before effecting a repair to a threaded hole, remove any snapped, broken or damaged bolts or studs. Penetrating oil can be used to free frozen threads. The offending item can be removed with locking pliers or with a screw or stud extractor. After the hole is clear, the thread can be repaired, as follows:

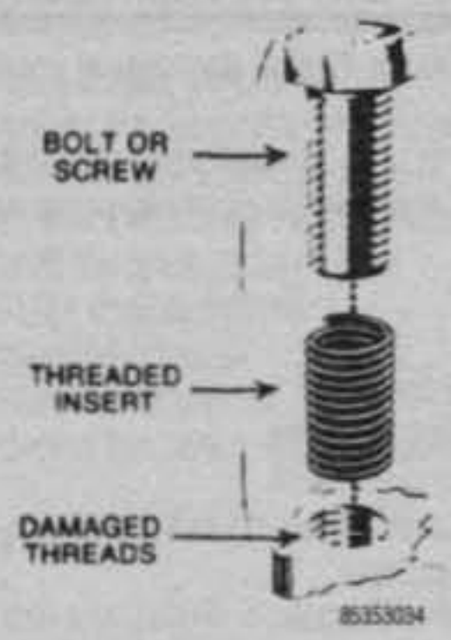

Fig. 34 Damaged bolt holes can be repaired with thread repair inserts

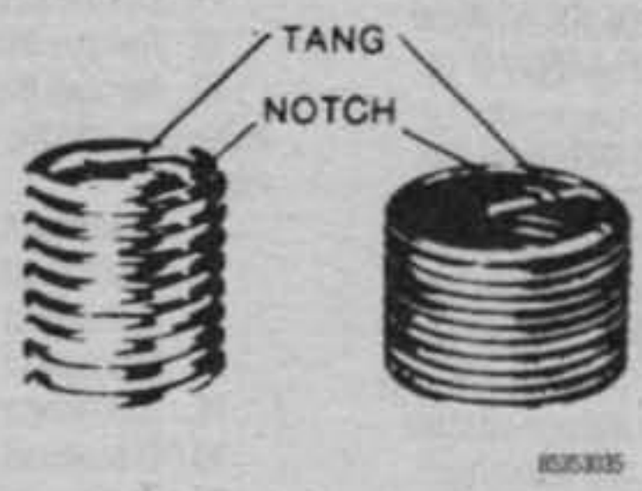

Fig. 35 Standard thread repair insert (left) and spark plug thread insert right

Fig. 36 Drill out the damaged threads with specified drill. Drill completely through the hole or to the bottom of a blind hole

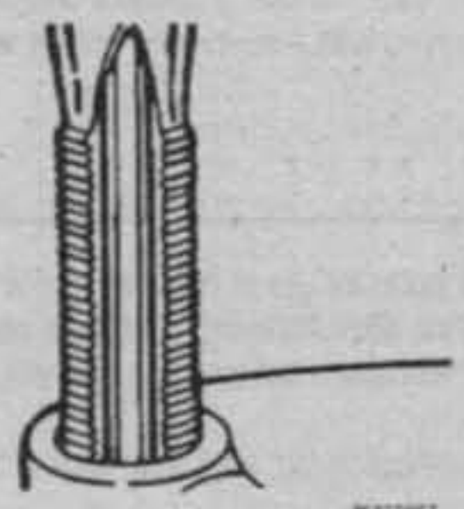

Fig. 37 With the tap supplied, tap the hole to receive the thread insert. Keep the tap well oiled and back it out frequently to avoid clogging the threads

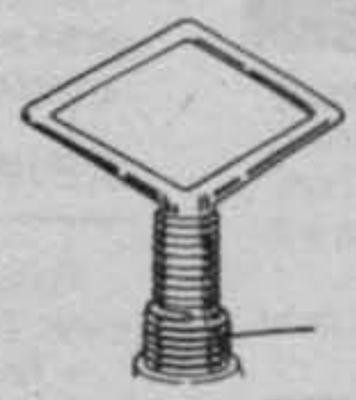

Fig. 38 Screw the threaded insert onto the installation tool until the tang engages the slot. Screw the insert into the tapped hole until it is ¼–½ turn below the top surface. After installation break off the tang with a hammer and punch

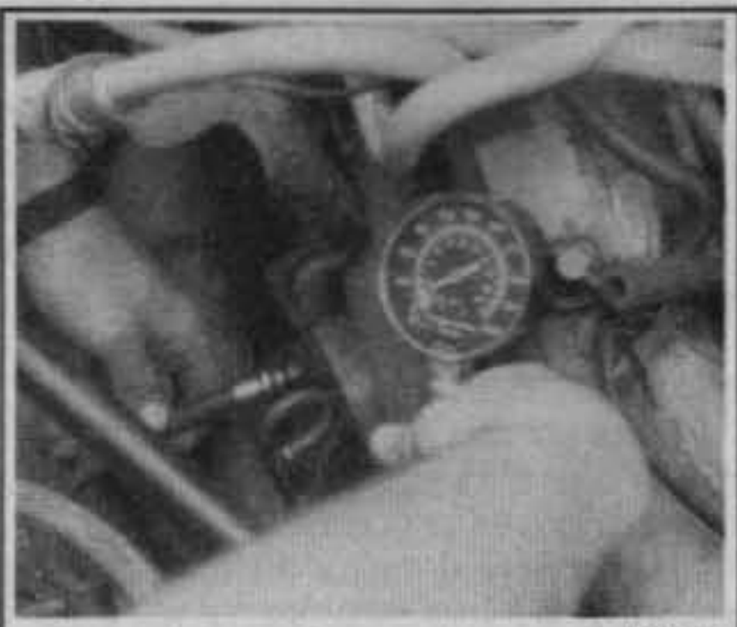

Fig. 39 The screw-in type compression gauge is more accurate

CHECKING ENGINE COMPRESSION

See Figure 39

A noticeable lack of engine power, excessive oil consumption and/or poor fuel mileage measured over an extended period are all indicators of internal engine war. Worn piston rings, scored or worn cylinder bores, blown head gaskets, sticking or burnt valves and worn valve seats are all possible culprits. A check of each cylinder's compression will help you locate the problems.

As mentioned in the Tools and Equipment portion of Section 1, a screw-in type compression gauge is more accurate than the type you simply hold against the spark plug hole, even though it takes slightly longer to use. The added effort is worth it, however, to obtain a more accurate reading.

1. Warm up the engine to normal operating temperature.
2. Remove all spark plugs.
3. Disconnect the high tension lead from the ignition coil.
4. Fully open the throttle either by operating the throttle linkage by hand or by having an assistant floor the accelerator pedal.
5. Screw the compression gauge into the No.1 spark plug hole until the fitting is snug.

➡Be careful not to crossthread the plug hole. On aluminum cylinder heads use extra care, as the threads in these heads are easily ruined.

6. Ask an assistant to depress the accelerator pedal fully on both carbureted and fuel injected Jeep vehicles. Then, while you read the compression gauge, ask the assistant to crank the engine two or three times in short bursts using the ignition switch.
7. Read the compression gauge at the end of each series of cranks, and record the highest of these readings. Repeat this procedure for each of the engine's cylinders.
8. Compare the highest readings for each cylinder. A cylinder's compression pressure is usually acceptable if it is not less than 80% of the highest reading. For example, if the highest reading is 150 psi, the lowest reading should be no less than 120 psi. In any case, however, no cylinder should have a reading below 100 psi.
9. If a cylinder is unusually low, pour a tablespoon of clean engine oil into the cylinder through the spark plug hole and repeat the compression test. If the compression comes up after adding the oil, it appears that the cylinder's piston rings or bore are damaged or worn. If the pressure remains low, the valves may not be seating properly (a valve job is needed), or the head gasket may be blown near that cylinder. If compression in any two adjacent cylinders is low, and if the addition of oil doesn't help the compression, there is leakage past the head gasket. Oil and coolant water in the combustion chamber can result from this problem. There may be evidence of water droplets on the engine dipstick when a head gasket has blown.

Engine

REMOVAL & INSTALLATION

2.5L Engine

1. Disconnect the battery ground cable.
2. Remove the air cleaner.
3. Remove the hood.
4. Drain the coolant.

CAUTION

When draining the coolant, keep in mind that cats and dogs are attracted by ethylene glycol antifreeze, and are quite likely to drink any that is left in an uncovered container or in puddles on the ground. This will prove fatal in sufficient quantity. Always drain the coolant into a sealable container. Coolant should be reused unless it is contaminated or several years old.

5. Remove the lower radiator hose.
6. Remove the upper radiator hose.
7. Disconnect the coolant recovery hose.
8. Remove the fan shroud.
9. Disconnect the automatic transmission coolant lines.
10. Discharge the refrigerant system. See Section 1.

CAUTION

Do this CAREFULLY, or let someone with experience and the proper equipment do it for you. Great personal injury can occur when mishandling refrigerant gas!

11. Disconnect and remove the condenser. Cap all openings at once!
12. Remove the radiator.
13. Remove the fan and install a 5/16 in. x ½ in. capscrew through the pulley and into the water pump flange to maintain the pulley-to-pump alignment.
14. Disconnect the heater hoses.
15. Disconnect the throttle linkage.
16. Disconnect the cruise control linkage.
17. Disconnect the oil pressure sending unit wire.
18. Disconnect the temperature sending unit wire.
19. Disconnect and tag all vacuum hoses connected to the engine.
20. Remove the air conditioning compressor.
21. Remove the power steering hoses at the gear.
22. Drain the power steering reservoir.

23. Remove the power brake vacuum check valve from the booster.
24. Raise and support the front end on jackstands.
25. Disconnect and tag the starter wires.
26. Remove the starter.
27. Disconnect the exhaust pipe at the manifold.
28. Remove the flywheel housing access cover.
29. On vehicles equipped with automatic transmission, matchmark the converter and flywheel and remove the attaching bolts.
30. Remove the upper flywheel housing-to-engine bolts and loosen the lower ones.
31. Remove the engine mount cushion-to-engine compartment bolts.
32. Attach a shop crane to the lifting eyes on the engine.
33. Raise the engine off the front supports.
34. Place a floor jack under the flywheel housing.
35. Remove the remaining flywheel housing bolts.
36. Lift the engine out of the vehicle.
37. Mount the engine on a work stand or cradle. Never let it rest on the oil pan.

To install:

38. Lower the engine into place in the vehicle.
39. Lubricate the manual transmission input shaft with chassis lube before insertion into clutch splines.
40. Install the flywheel housing bolts. Torque the top flywheel housing-to-engine bolts to 27 ft. lbs. (37 Nm) and the bottom ones to 43 ft. lbs. (58 Nm).
41. Install the engine mount cushion-to-engine compartment bolts. Torque the front bracket support bolts to 33 ft. lbs. (45 Nm).
42. Remove the shop crane.
43. On vehicles equipped with automatic transmission, install the converter attaching bolts.
44. Install the flywheel housing access cover.
45. Connect the exhaust pipe at the manifold.
46. Install the starter.
47. Connect the wires.
48. Raise and support the front end on jackstands.
49. Install the power brake vacuum check valve on the booster.
50. Fill the power steering reservoir.
51. Connect the power steering hoses at the gear.
52. Install the air conditioning compressor.
53. Connect all vacuum hoses.
54. Connect all wires.
55. Connect the throttle linkage.
56. Connect the cruise control linkage.
57. Connect the heater hoses.
58. Install the fan.
59. Install the radiator.
60. Install the condenser.
61. Evacuate and charge the refrigerant system. See Section 1.

CAUTION

Do this CAREFULLY, or let someone with experience do it for you. Great personal injury can occur when mishandling refrigerant gas!

62. Install the fan shroud.
63. Connect the automatic transmission coolant lines.
64. Install the upper radiator hose.
65. Connect the coolant recovery hose.
66. Install the lower radiator hose.
67. Fill the cooling system.
68. Install the hood.
69. Install the air cleaner.
70. Connect the battery ground cable.

4.0L Engine

1. Place a protective cloth on the windshield frame. Raise the hood and rest it on the frame.
2. Disconnect the battery cables and remove the battery.
3. Properly relieve the fuel system pressure.

➡Label all electrical connectors and vacuum lines prior to disconnecting them, so they can be reinstalled in their proper locations.

4. Drain the cooling system.
5. Disconnect the wires from the alternator.
6. Disconnect the ignition coil and distributor wire connections.
7. Disconnect the oil pressure sending unit connector.
8. Disconnect the wires from the starter.
9. Disconnect the fuel injection wires.
10. Disconnect the fuel lines from the fuel rails.
11. Remove the fuel line bracket from the intake manifold.
12. Disconnect the engine ground strap.
13. Remove the air cleaner assembly.
14. Disconnect the canister purge hose from the vapor canister "T" connector.
15. Disconnect the idle speed actuator wire connector.
16. Disconnect the throttle cable and remove it from the bracket.
17. Disconnect the throttle rod from the bellcrank.
18. If equipped, disconnect the cruise control cable.
19. Detach the oxygen sensor electrical connector.
20. Disconnect the upper and lower hoses from the radiator.
21. Disconnect the coolant hoses from the rear of the intake manifold and thermostat housing.
22. Disconnect the heater hoses.
23. Remove the fan shroud screws.
24. Remove the radiator and fan shroud.
25. Remove the engine cooling fan.
26. Remove the engine cooling fan and install a 15/16 x 1/2 inch capscrew through the fan pulley into the water pump flange. This will maintain the pulley and water pump in alignment when the crankshaft is rotated.
27. If equipped, disconnect the check valve from the power brake booster.
28. If equipped with power steering, perform the following:
    a. Disconnect the steering hoses from the fittings at the steering gear.
    b. Drain the pump reservoir.
    c. Cap all fittings once removed.
29. Raise and support the vehicle safely.
30. Remove the oil filter.
31. Remove the starter.
32. Remove the flywheel access cover.
33. Remove the engine support cushion-to-bracket through bolts.
34. Disconnect the exhaust pipe from the manifold.
35. Remove the upper flywheel housing bolts and loosen the bottom bolts.
36. Remove the engine shock damper bracket from the sill.
37. Lower the vehicle.
38. Attach a lifting device to the engine.
39. Place a support under the bellhousing.
40. Remove the remaining flywheel bolts.
41. Lift the engine from the vehicle.
42. Install the oil filter to keep foreign material out of the engine.

To install:

43. Remove the oil filter.
44. Lower the engine into the vehicle. To ease installation, remove the engine support cushions to aid in engine-to-transmission alignment.
45. Insert the transmission shaft into the clutch spline.
46. Align the flywheel housing with the engine.
47. Install and tighten the flywheel housing bolts finger-tight.
48. If removed, install the engine support cushions.
49. Lower the engine into place and remove the lifting device.
50. Raise and support the vehicle safely.
51. Attach the engine shock damper bracket to the sill.
52. Attach the exhaust pipe to the manifold and torque the nuts to 23 ft. lbs. (31 Nm).
53. Install the flywheel access cover.
54. Install the remaining flywheel bolts and torque them to 28 ft. lbs. (38 Nm).
55. Install the starter.
56. Install the oil filter.
57. Lower the vehicle.
58. Connect the coolant lines and tighten the clamps.
59. If equipped with power steering.
    a. Connect the hoses to the steering gear and torque the nut to 38 ft. lbs. (52 Nm).
    b. Fill the pump reservoir with fluid.
60. Remove the alignment capscrew and install the fan assembly.

61. Install the accessory drive belt.
62. Install the radiator and shroud.
63. Connect the radiator hoses.
64. Attach the oxygen sensor electrical connector.
65. Connect the throttle valve rod and retainer. Connect the throttle cable and install the rod and spring.
66. If equipped, connect the speed control cable.
67. Install the vacuum hose and check valve to the brake booster.
68. Connect the electrical connections disconnected during removal.
69. Connect the fuel lines to the fuel rail.
70. Install the fuel line bracket to the intake manifold.
71. Install the air cleaner.
72. Install the battery and connect the cables.
73. Fill the engine to the proper level with oil.
74. Fill the cooling system.
75. Start the engine and check for leaks.
76. Fill the fluid levels to the proper level.

4.2L Engine

1. Remove the air cleaner.
2. Drain the cooling system.

CAUTION

When draining the coolant, keep in mind that cats and dogs are attracted by ethylene glycol antifreeze, and are quite likely to drink any that is left in an uncovered container or in puddles on the ground. This will prove fatal in sufficient quantity. Always drain the coolant into a sealable container. Coolant should be reused unless it is contaminated or several years old.

3. Disconnect the upper and lower radiator hoses.
4. If equipped with an automatic transmission, disconnect the cooler lines from the radiator.
5. Remove the radiator and the fan. If the Jeep has air conditioning, evacuate the system, remove the condenser and cap all openings immediately. See Section 1.
6. If so equipped, remove the power steering pump and the drive belt, and place the unit aside. Do not remove the power steering hoses.
7. If the vehicle has air conditioning, remove the compressor.
8. Disconnect all wires, lines, linkage, and hoses that are connected to the engine. Remove the oil filter.
9. Remove both of the engine front support cushion-to-frame retaining nuts.
10. Disconnect the exhaust pipe at the support bracket and exhaust manifold.
11. Support the weight of the engine with a lifting device.
12. Remove the front support cushion and bracket assemblies from the engine.
13. Remove the transfer case shift lever boot and the transmission access cover.
14. If equipped with an automatic transmission, remove the upper bolts securing the transmission bellhousing to the engine. If equipped with a manual transmission, remove the upper bolts that secure the clutch housing to the engine.
15. Remove the starter motor.
16. If the vehicle is equipped with an automatic transmission:
    a. Remove the engine to transmission adapter plate inspection covers.
    b. Mark the assembled position of the converter and flex plate and remove the converter-to-flex plate retaining screws.
    c. Remove the remaining bolts securing the transmission bellhousing to the engine.
17. If equipped with a manual transmission, remove the lower cover of the clutch housing and the remaining bolts that secure the clutch housing to the engine.
18. Support the transmission with a floor jack.
19. Attach a suitable sling to the engine and using a hoist, lift the engine upward and forward at the same time, removing it from the vehicle.

To install:

20. Lower the engine into the vehicle and slide it rearward to engage the transmission.
21. If equipped with an automatic transmission, install the upper bolts securing the transmission bellhousing to the engine. Torque them to 27 ft. lbs. (37 Nm). If equipped with a manual transmission, install the upper bolts that secure the clutch housing to the engine. Torque them to 27 ft. lbs. (37 Nm).
22. If equipped with a manual transmission, install the lower cover of the clutch housing and the remaining bolts that secure the clutch housing to the engine. Torque the clutch housing spacer-to-bolts to 12–15 ft. lbs. (16–20 Nm). Torque the clutch housing lower bolts to 43 ft. lbs. (58 Nm).
23. If the vehicle is equipped with an automatic transmission:
    a. Install the remaining bolts securing the transmission bellhousing to the engine. Torque the bellhousing lower bolts to 43 ft. lbs. (58 Nm).
    b. Mark the assembled position of the converter and flex plate and install the converter-to-flex plate retaining screws. Torque the bolts to 20–25 ft. lbs. (27–34 Nm).
    c. Install the engine to transmission adapter plate inspection covers.
24. Install the starter motor. Torque the mounting bolts to 18 ft. lbs. (25 Nm).
25. Install the transfer case shift lever boot and the transmission access cover.
26. Install the front support cushion and bracket assemblies from the engine.
27. Remove the shop crane.
28. Connect the exhaust pipe at the support bracket and exhaust manifold. Torque the nuts to 20 ft. lbs. (27 Nm).
29. Install both of the engine front support cushion-to-frame retaining nuts. Torque them to 35 ft. lbs. (47 Nm).
30. Connect all wires, lines, linkage, and hoses that are connected to the engine.
31. Install the oil filter.
32. If so equipped, install the power steering pump and the drive belt.

➡If the vehicle has air conditioning, mount and connect the air conditioning compressor. See Section 6.

33. Install the radiator and the fan, and the condenser.
34. Evacuate, charge and leak test the refrigerant system.
35. If equipped with an automatic transmission, connect the cooler lines to the radiator.
36. Connect the upper and lower radiator hoses.
37. Fill the cooling system.
38. Install the air cleaner.

Rocker Arm (Valve) Cover

REMOVAL & INSTALLATION

2.5L Engine

▶ See Figures 40, 41, 42, 43 and 44

1. Disconnect the PCV vacuum hose from the valve cover.
2. Remove the cover mounting bolts and remove the cover from the head.

To install:

➡A cured gasket is part of the cylinder head cover. Remove any original sealer from the cover sealing surface using a fabric cleaner. The original grey gasket material should not be removed. If pieces are missing, the cover must be replaced.

3. Thoroughly clean the sealing surface of the cylinder head and the seal on the cover.
4. Install the cylinder head cover and tighten the mounting bolts to 44 inch lbs. (5 Nm).
5. Connect the PCV vacuum hose to the valve cover.

4.0L Engine

1991 VEHICLES

1. Disconnect the PCV vacuum hoses from the valve cover.
2. Remove the cover mounting bolts and remove the cover from the head.

To install:

➡A cured gasket is part of the cylinder head cover. Remove any original sealer from the cover sealing surface using a fabric cleaner. The original grey gasket material should not be removed. If pieces are missing the cover must be replaced.

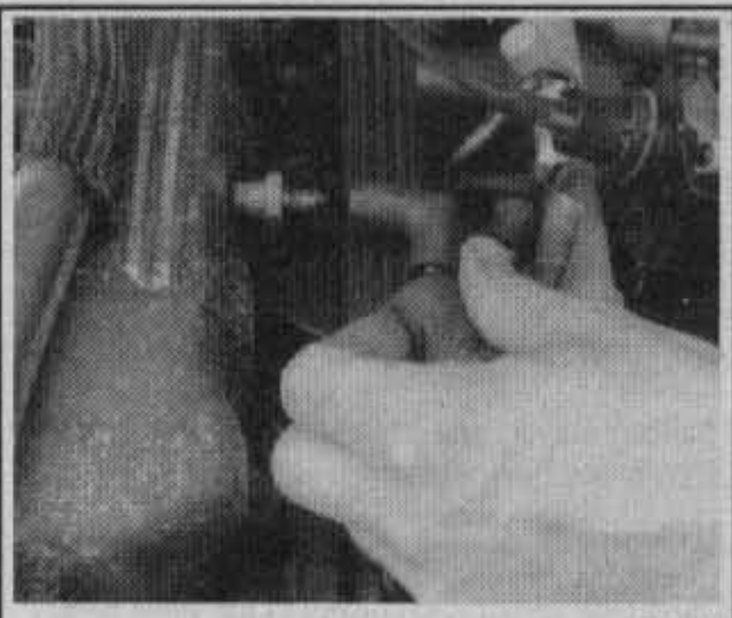

85353041

Fig. 40 Disconnect the crankcase ventilation vacuum hose from the valve cover

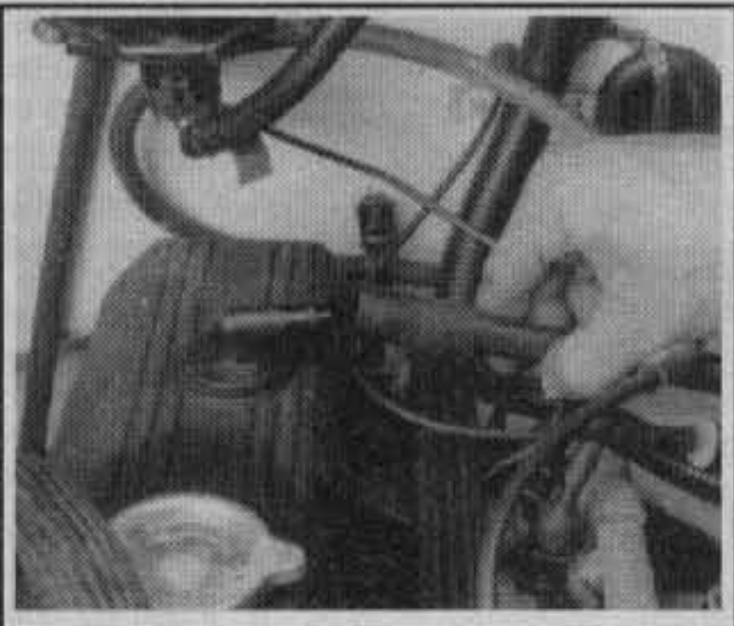

85353042

Fig. 41 Disconnect the fresh air inlet hose from the valve cover

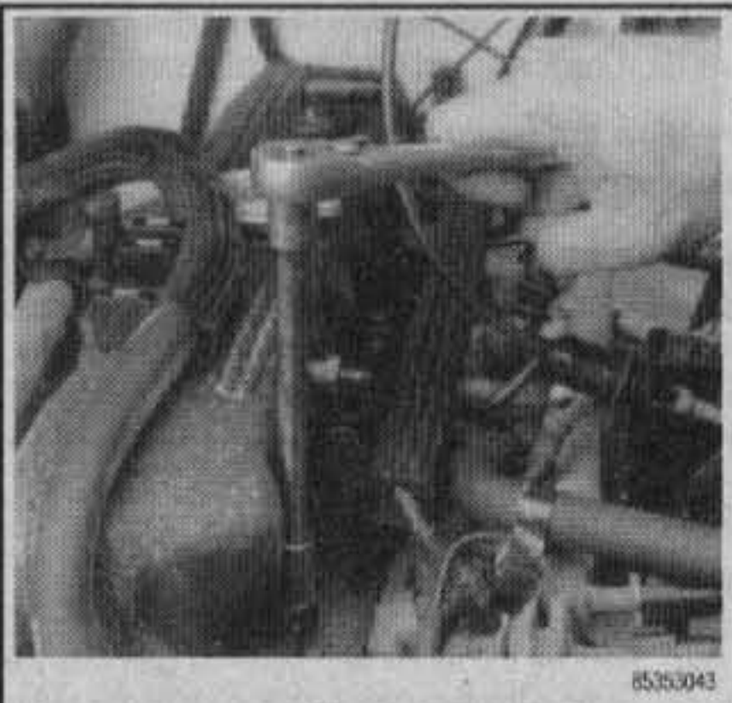

85353043

Fig. 42 Remove the cover mounting bolts

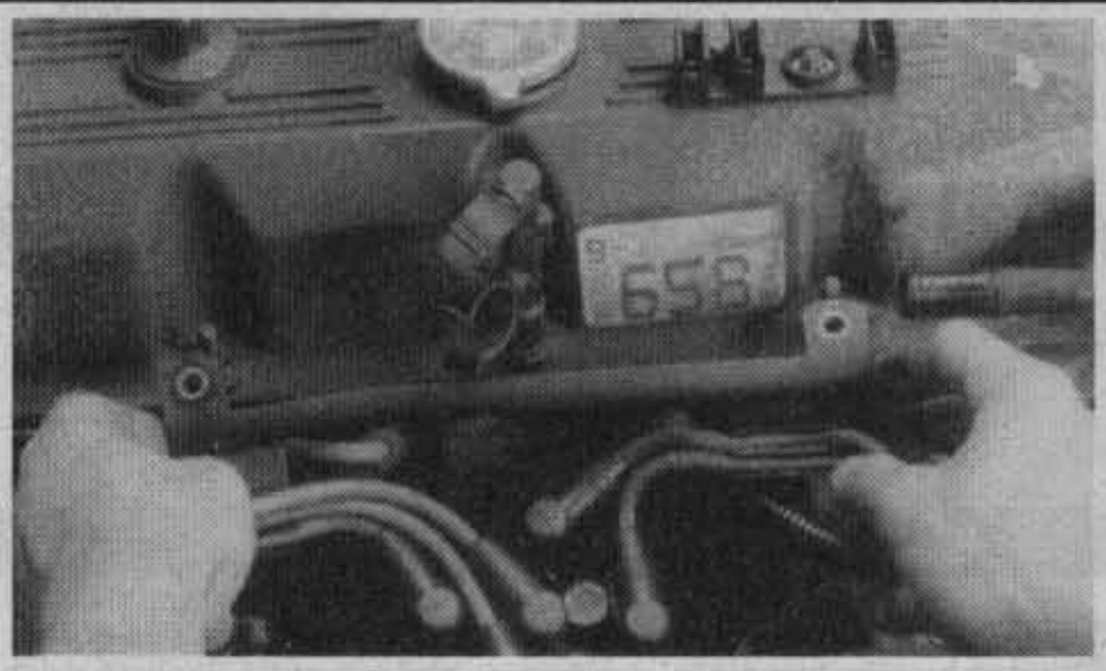

85353044

Fig. 43 Disconnect the vacuum hose from the valve cover studs

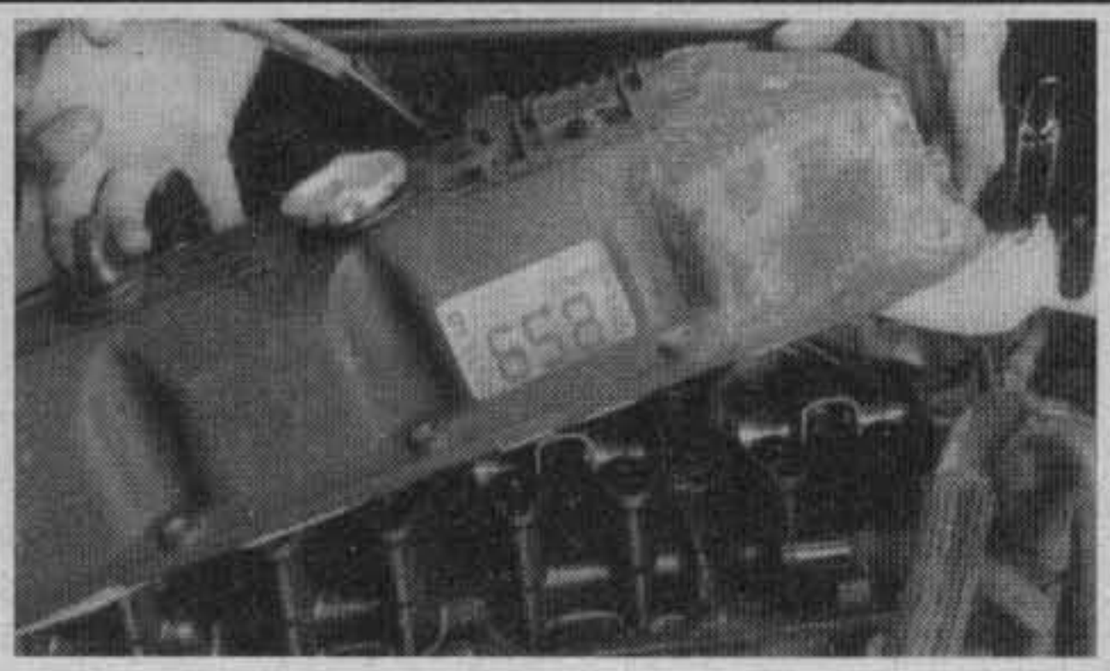

85353045

Fig. 44 Remove the valve cover from the engine

3. Thoroughly clean the sealing surface of the cylinder head and the seal on the cover.
4. Install the cylinder head cover and tighten the mounting bolts to 55 inch lbs. (6 Nm).
5. Connect the PCV vacuum hoses to the valve cover.

1992–95 VEHICLES

1. Disconnect the PCV vacuum and fresh air inlet hoses from the valve cover.
2. Remove the cover mounting bolts and remove the cover from the head.

To install:

➡A cured gasket is part of the cylinder head cover. Remove any original sealer from the cover sealing surface using a fabric cleaner. The original grey gasket material should not be removed. If pieces are missing the cover must be replaced.

3. Thoroughly clean the sealing surface of the cylinder head and the seal on the cover.
4. Install the cylinder head cover and tighten the mounting bolts to 85 inch lbs. (10 Nm).
5. Connect the PCV vacuum and fresh air inlet hoses to the valve cover.

4.2L Engine

▸ See Figure 45

1. Disconnect the negative battery cable.
2. Remove the air cleaner and the PCV molded hose.
3. Disconnect the distributor vacuum advance hose at the distributor.
4. Disconnect the fuel pipe at the fuel pump. Rotate the pipe as necessary to provide clearance for the cover removal.
5. Remove the PCV valve from the cylinder head and disconnect the PCV shut-off valve vacuum hose.
6. Remove the vacuum switch and bracket assembly from the cover.
7. Tag and remove all necessary vacuum and air hoses.
8. Remove the cover retaining nuts.
9. Break the seal with a clean putty knife or razor blade. Don't attempt to remove the cover until the seal is broken. To remove the cover, pry where indicated at the bolt holes.
10. Rotate the cover toward the passenger side and remove the cover.

To install:

11. Clean the mating surfaces of the cover and head.
12. Run a ⅛ in. (3mm) bead of RTV sealer around the mating surface of the head, then install the cover within 10 minutes. Don't allow any of the RTV material to drop into the engine!
13. Install replacement seals on the cylinder head cover attaching studs.
14. Install the cylinder head cover and install and tighten the cover nuts to 28 inch lbs. (3 Nm).
15. Install and tighten the cylinder head cover bolts to 55 inch lbs. (6 Nm).
16. Reposition and install all hoses.

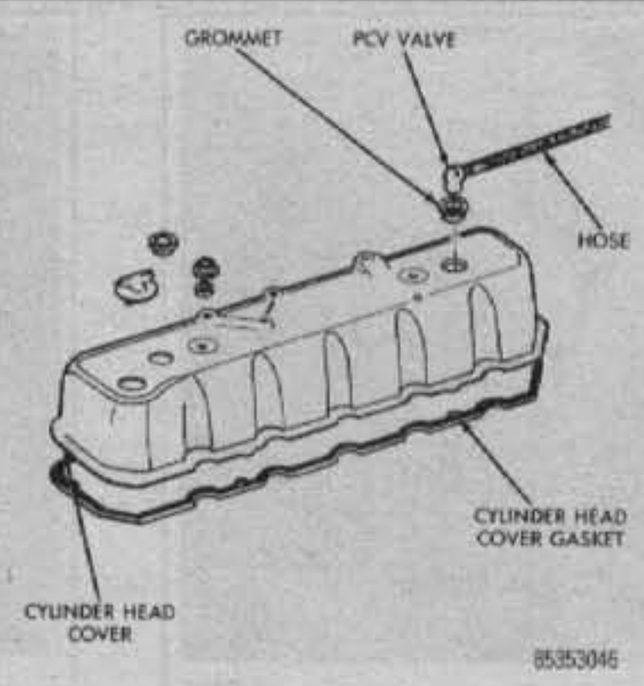

Fig. 45 Cylinder head (rocker arm) cover—4.2L engine

17. Connect the negative battery cable.
18. Check and add engine oil as necessary.

➡Allow the sealer to cure for at least 1 or 2 hours before starting the engine.

Rocker Arms and Pushrods

REMOVAL & INSTALLATION

2.5L Engine

▶ See Figures 46 thru 51

1. Remove the rocker arm cover as previously outlined.
2. Remove the two capscrews at each bridge and pivot assembly. It's best to remove the capscrews alternately, a little at a time each to avoid damage to the bridge.
3. Remove the bridges, pivots and rocker arms. Keep them in order.
4. Remove the pushrods and keep them in order.

To install:

5. Install the pushrods, rocker arms and bridge and pivot assemblies in their original order. Tighten the capscrews to 19 ft. lbs. (26 Nm).
6. Clean the mating surfaces of the cover and head.
7. Run a ⅛ in. (3mm) bead of RTV sealer around the mating surface of the head. Install the cover within 10 minutes! Don't allow any of the RTV material to drop into the engine! In the engine it will form and set and possibly block and oil passage. Torque the cover bolts to 36–60 inch lbs. (4–6.7 Nm)

4.0L and 4.2L Engine

▶ See Figure 46

On these engines, the rocker arms operate on a bridged pivot that is secured with two capscrews. The bridged pivots maintain proper rocker arm-to-valve tip alignment.

1. Remove the rocker cover and gasket, if used.
2. Remove the two capscrews at each bridged pivot, backing off each capscrew one turn at a time to avoid breaking the bridge.
3. Remove each bridged pivot and corresponding pair of rocker arms. Place them on a clean surface in the same order as they are removed.
4. Remove the pushrods and keep them in order.

➡Bridged pivots, capscrews, rockers and pushrods must all be reinstalled in their original positions.

5. Clean all the parts in a suitable solvent and use compressed air to blow out the oil passages in the pushrods and the rocker arms. Replace any excessively worn parts.

To install:

6. Install the rocker arms, pushrods and bridged pivots in the same positions from which they were removed.

➡Be sure that the bottom end of each pushrod is centered in the plunger cap of the hydraulic valve tappet from which it was removed.

7. Install the capscrews and tighten them one turn at a time, alternating between the two screws on each bridge. Tighten the capscrews to 21 ft. lbs. (28 Nm).
8. Install the rocker arm cover(s) as previously outlined.

Thermostat

REMOVAL & INSTALLATION

▶ See Figures 52 thru 57

❄ CAUTION

When draining the coolant, keep in mind that cats and dogs are attracted by ethylene glycol antifreeze, and are quite likely to drink

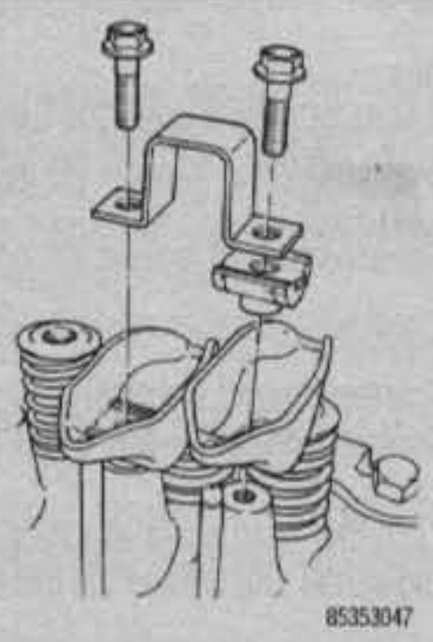

Fig. 46 Rocker arms and bridge—all engines

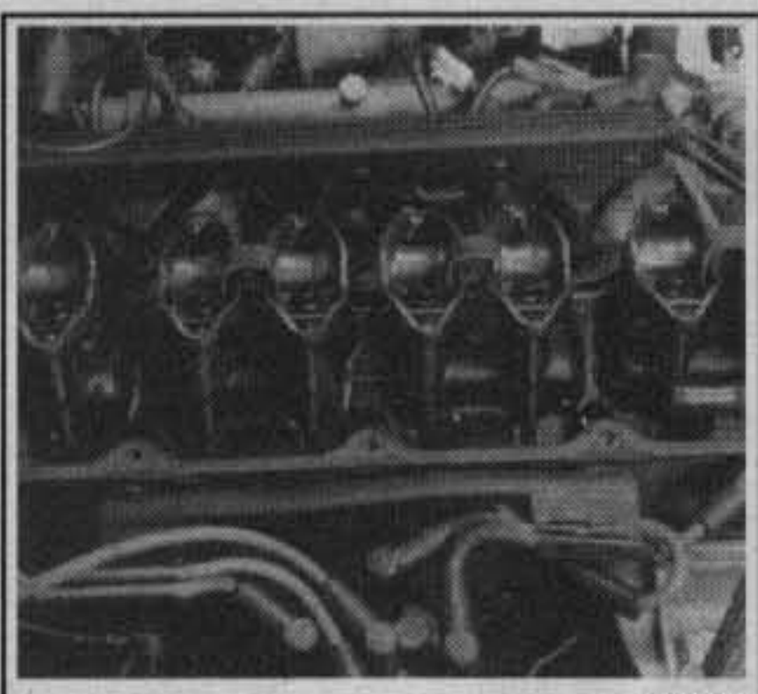

Fig. 47 Rocker arms and pushrods

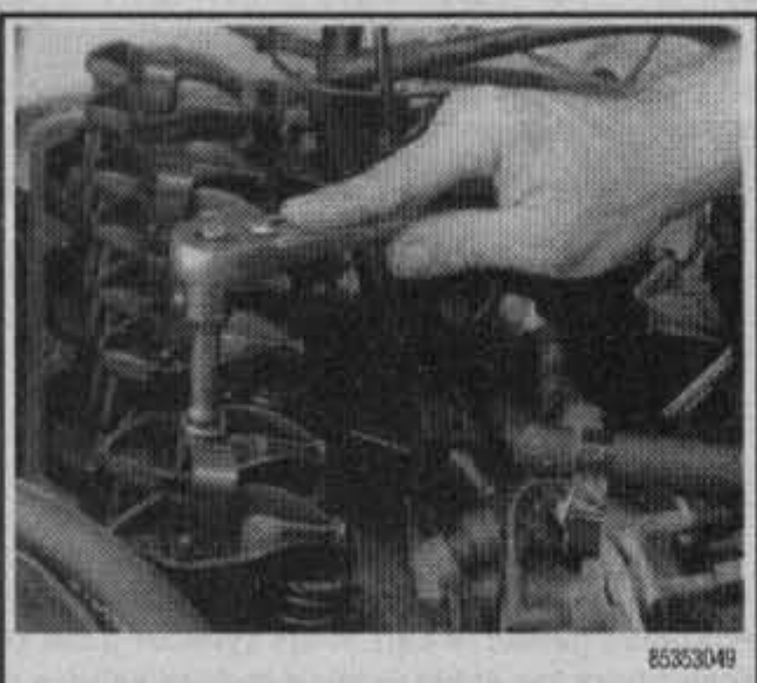

Fig. 48 Remove the two capscrews at each bridge and pivot assembly

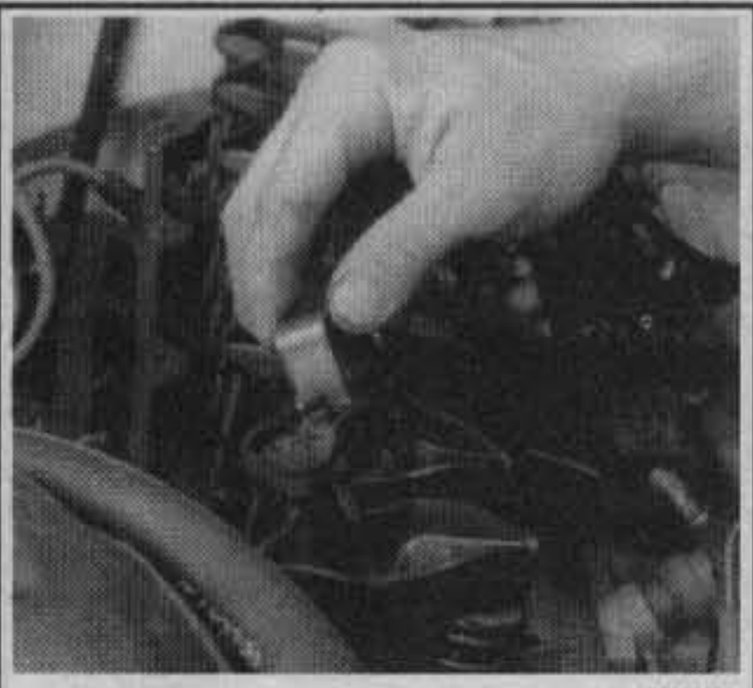

Fig. 49 Removing the bridge assembly

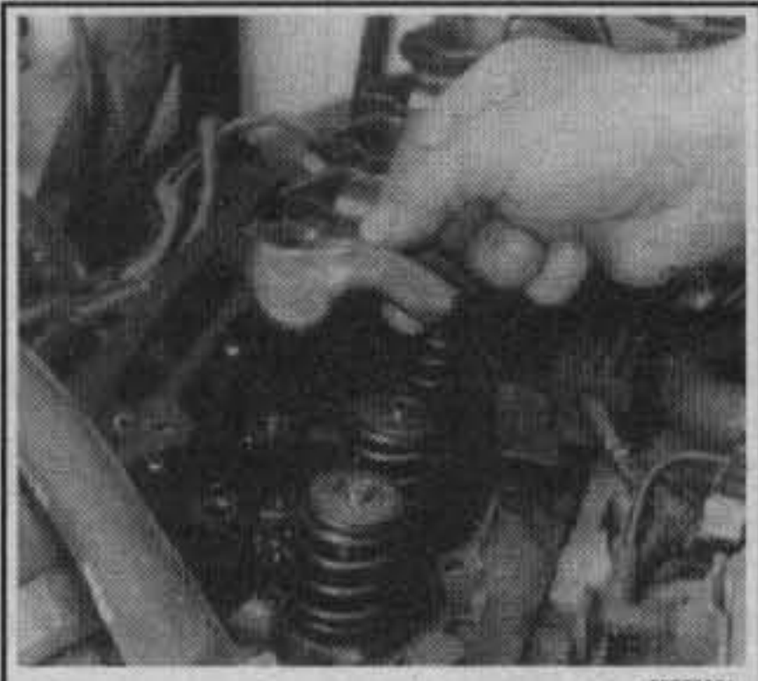

Fig. 50 Removing the rocker arm

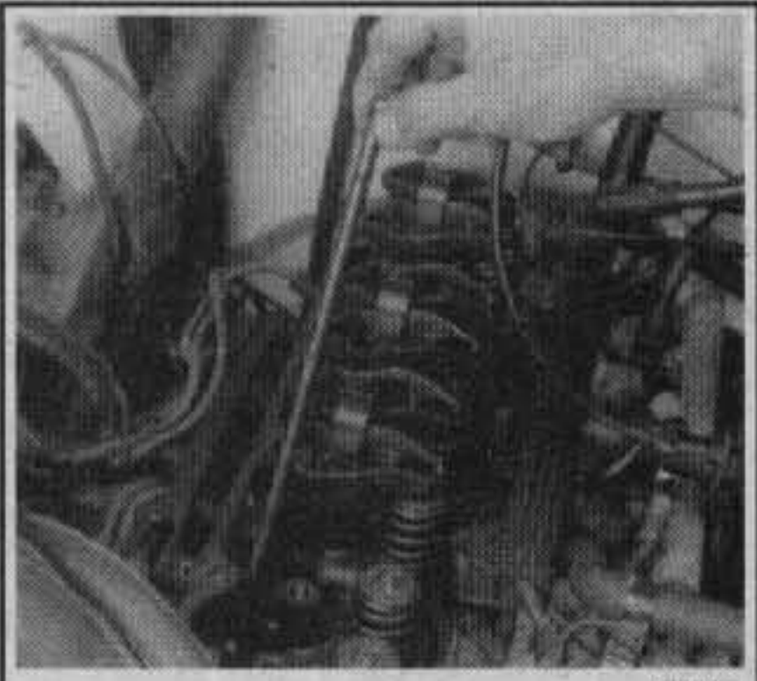

Fig. 51 Removing the pushrod

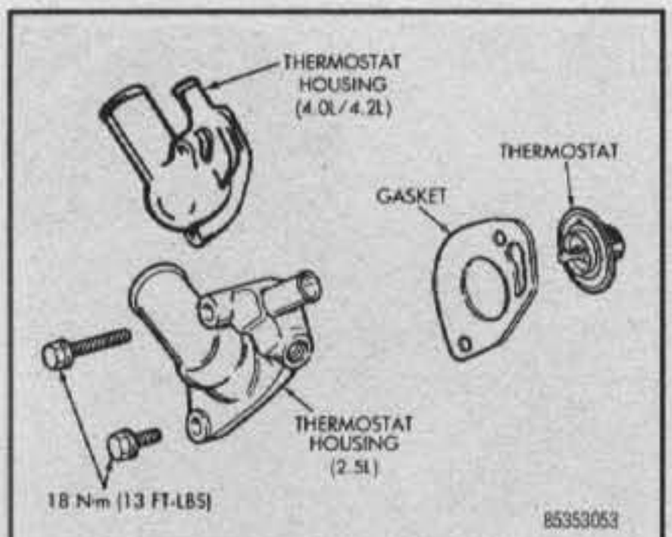

Fig. 52 Thermostat housing installation—1989–90 vehicles

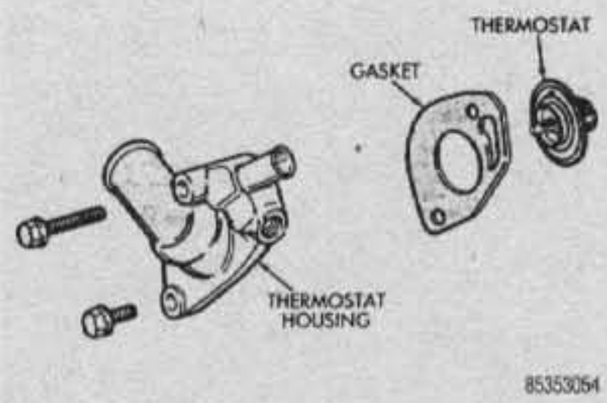

Fig. 53 Thermostat housing installation—1991 vehicles

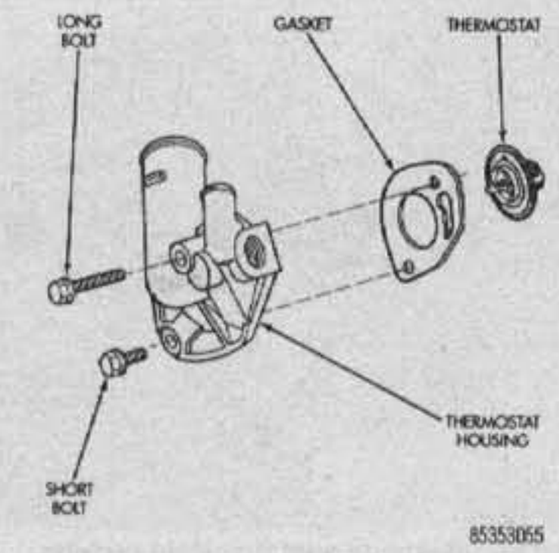

Fig. 54 Thermostat housing installation—1992–95 vehicles

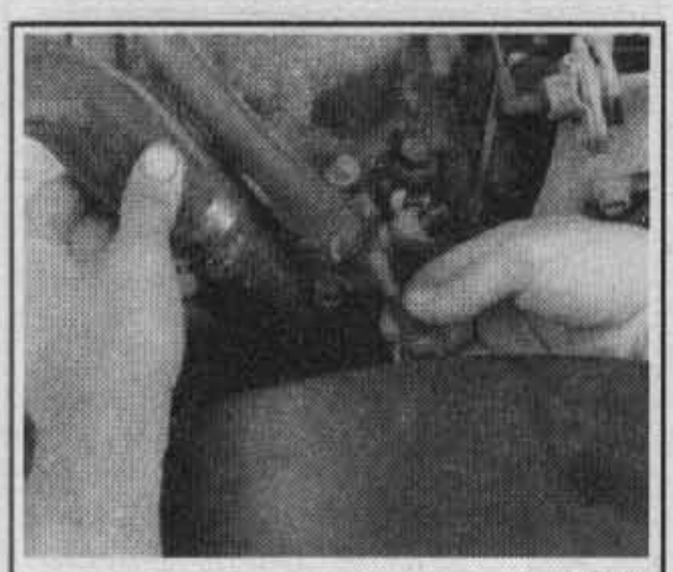

Fig. 55 Removing a thermostat housing retaining bolt

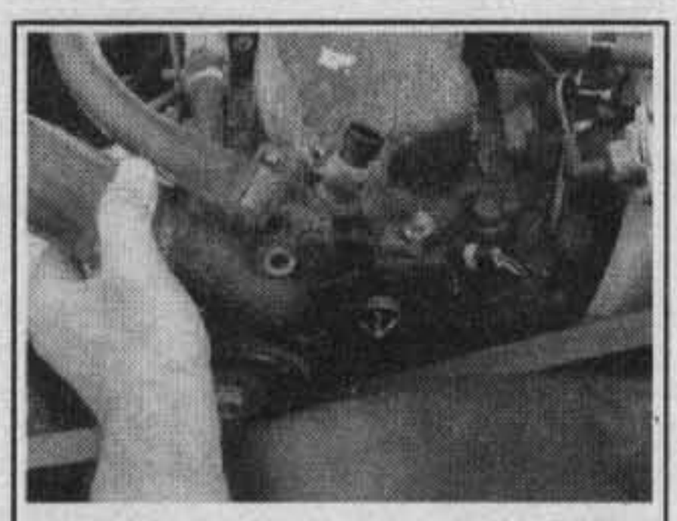

Fig. 56 After removing the retaining bolts, pull the thermostat housing away with the hoses still attached

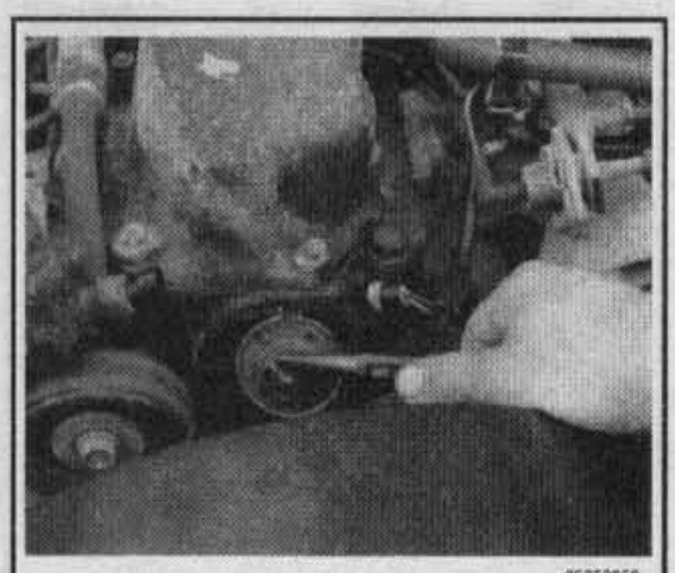

Fig. 57 Removing the thermostat from the housing

any that is left in an uncovered container or in puddles on the ground. This will prove fatal in sufficient quantity. Always drain the coolant into a sealable container. Coolant should be reused unless it is contaminated or several years old.

The thermostat is located in the water outlet housing at the front or on top of the engine.

1. Drain the cooling system.

➡It is not necessary to disconnect or remove any of the hoses.

2. Remove the two attaching screws and lift the housing from the engine.
3. Remove the thermostat and the gasket.
4. Thoroughly clean off any remaining gasket material.

To install:

5. Place the thermostat in the housing with the spring toward the engine.

➡All thermostats are marked on the outer flange to indicate the proper installed position.

6. Position a new gasket with a small amount of sealing compound applied to both sides.
7. Install the water outlet and tighten the attaching bolts to 13–15 ft. lbs. (18–20 Nm).
8. Refill the cooling system.

Intake Manifold

REMOVAL & INSTALLATION

2.5L Engine

▸ See Figures 58 thru 72

➡It may be necessary to remove the throttle body before the intake manifold can be removed.

1. Disconnect the negative battery cable.
2. Drain the radiator.

CAUTION

When draining the coolant, keep in mind that cats and dogs are attracted by ethylene glycol antifreeze, and are quite likely to drink any that is left in an uncovered container or in puddles on the ground. This will prove fatal in sufficient quantity. Always drain the coolant into a sealable container. Coolant should be reused unless it is contaminated or several years old.

3. Remove the air inlet hose from the throttle body and air cleaner.
4. Loosen the accessory drive belt tension and remove the belt from the power steering pump.
5. Remove the power steering pump and brackets from the water pump and intake manifold and support the pump out of the way.
6. Remove the fuel tank filler cap to relieve the fuel tank pressure, then reinstall the cap.
7. Disconnect the fuel supply and return pipes. Remove the fuel rail, as required.
   a. Remove and numerically tag the injector harness connectors at each injector.
   b. Remove the fuel rail retaining bolts and gently rock the rail assembly until all the injectors are out of the intake manifold.
8. Label and disconnect all vacuum hoses and sensor connectors.
9. Disconnect the throttle cable from the bellcrank.
10. Disconnect the throttle valve linkage, if equipped with automatic transmission.
11. Remove intake manifold attaching bolts 2 through 5, then slightly loosen bolt No. 1 as well as nuts 6 and 7. Remove the intake manifold and discard the gasket.
12. Clean the mating surfaces of the manifold and cylinder head.

To install:

➡If the manifold is being replaced, ensure that all fittings, etc. are transferred to the replacement manifold.

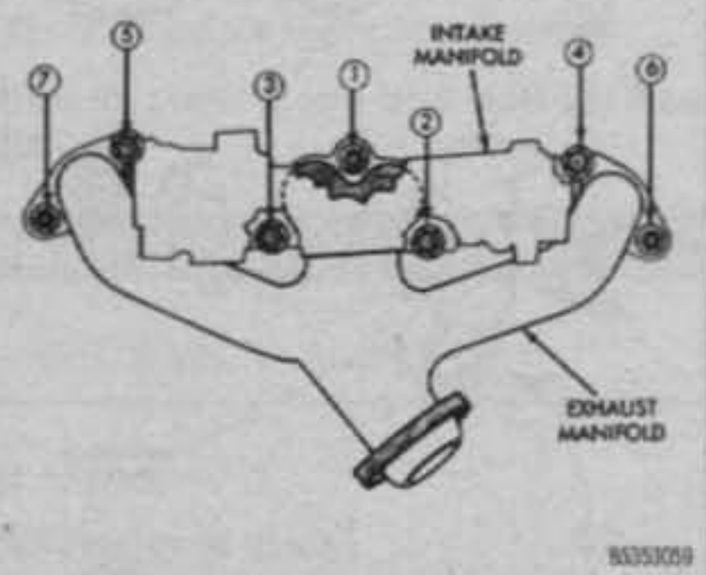

Fig. 58 Intake/exhaust manifold installation and torque sequence—1989-91 2.5L engine

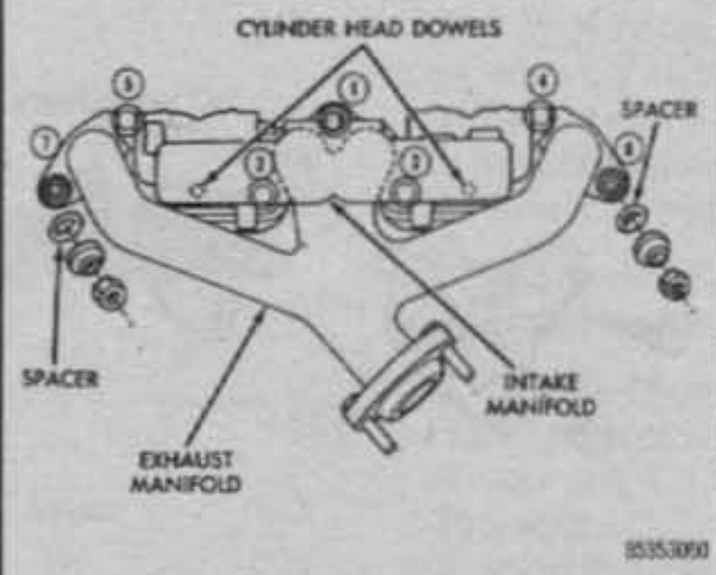

Fig. 59 Intake/exhaust manifold installation and torque sequence—1992-95 2.5L engine

Fig. 60 Remove the air inlet hose from the throttle body and air cleaner

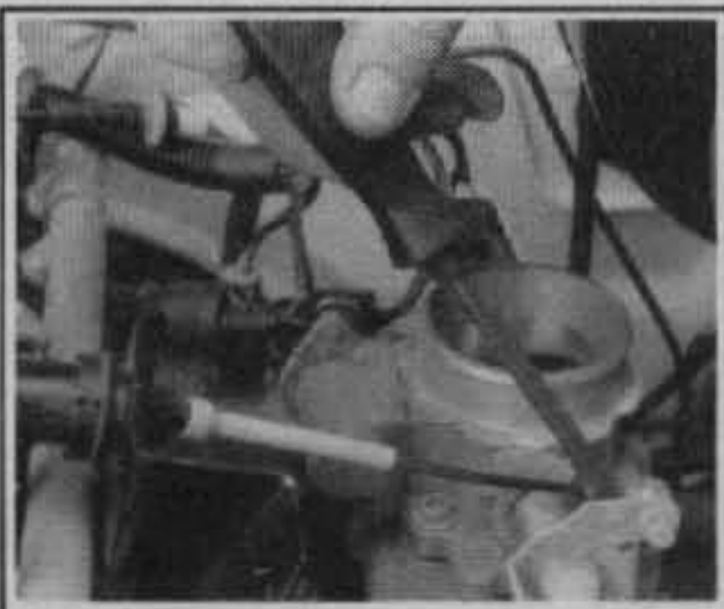

Fig. 61 Remove the retainer securing the accelerator cable to the throttle body

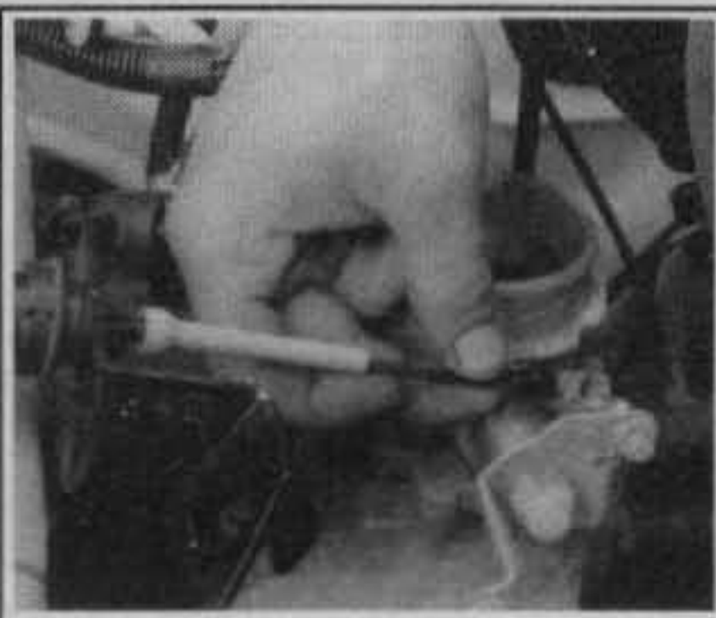

Fig. 62 Disconnect the accelerator cable from the throttle body

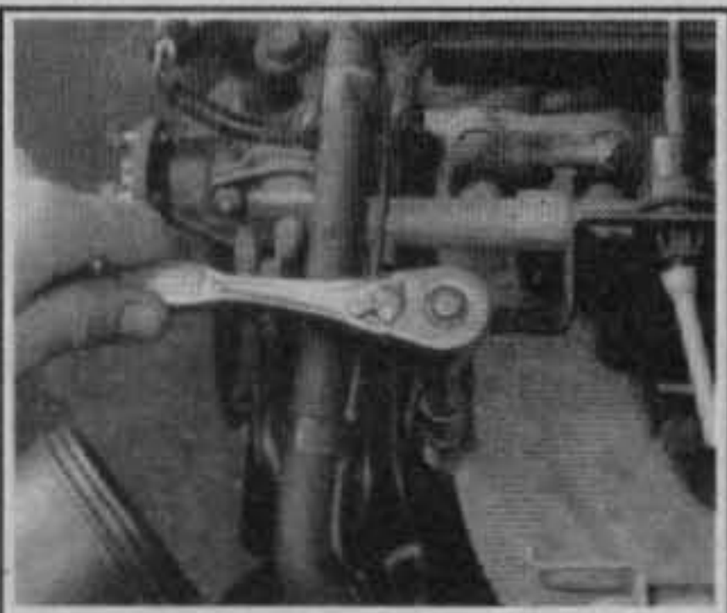

Fig. 63 Remove the accelerator cable hold-down bracket retaining bolts

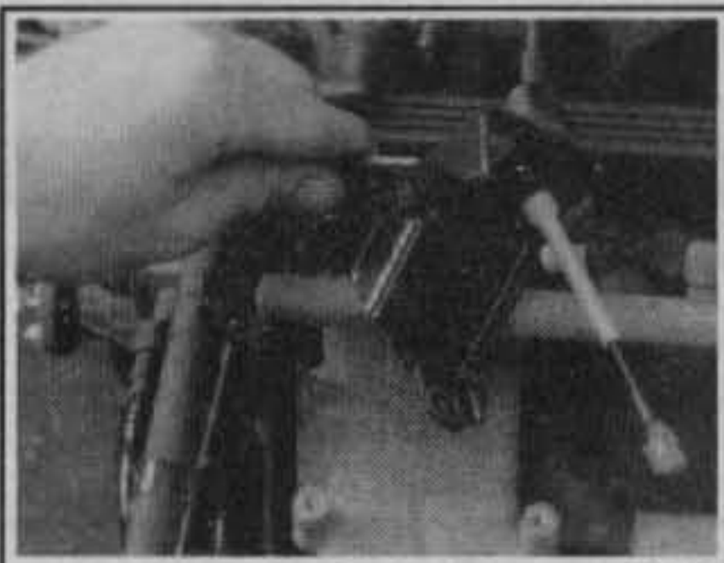

Fig. 64 The accelerator cable hold-down bracket shown disconnected from the manifold

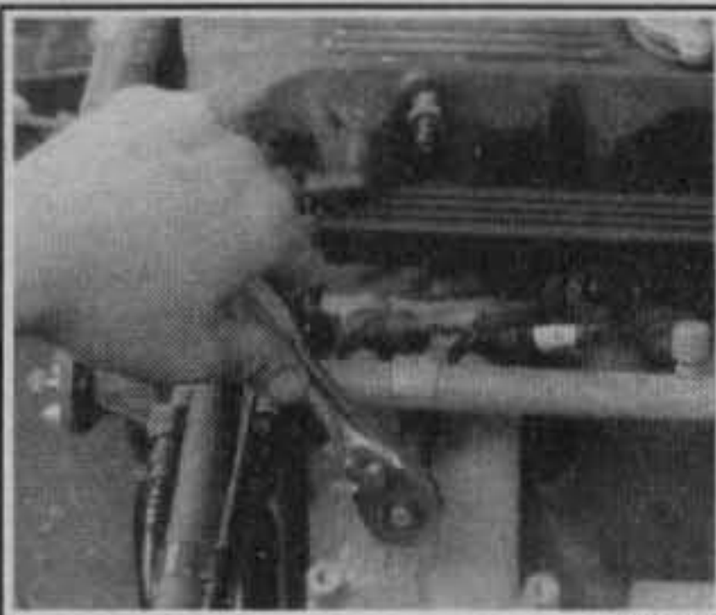

Fig. 65 Removing the fuel rail retaining bolts

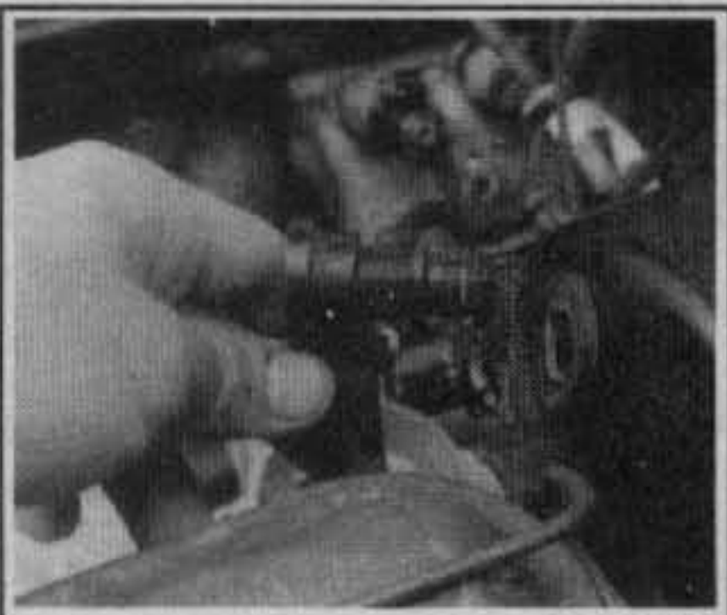

Fig. 66 Removing the vacuum hose at the brake booster

Fig. 67 Disconnect and tag all vacuum hoses related to intake manifold removal

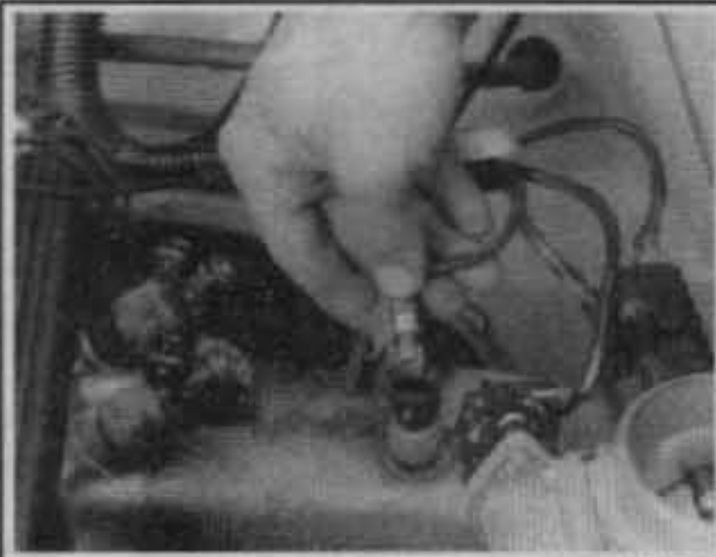

Fig. 68 Unfasten and tag the electrical connector from the Manifold Air Temperature (MAT) sensor

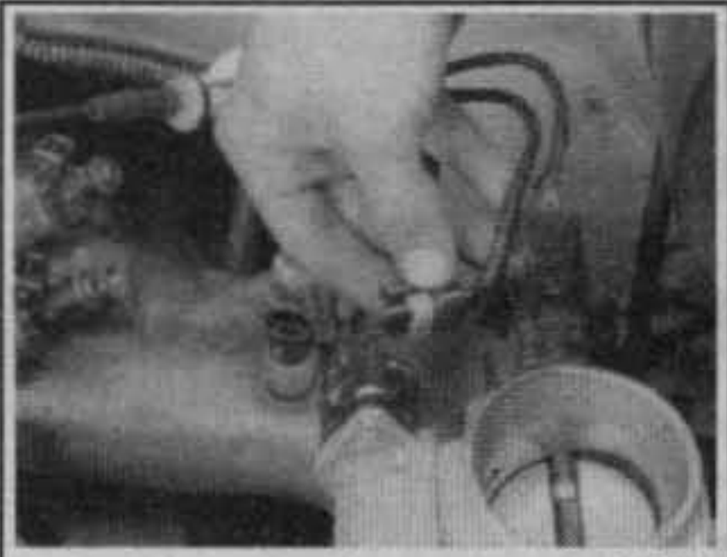

Fig. 69 Unfasten and tag the electrical connector from the Automatic Idle Speed (AIS) motor

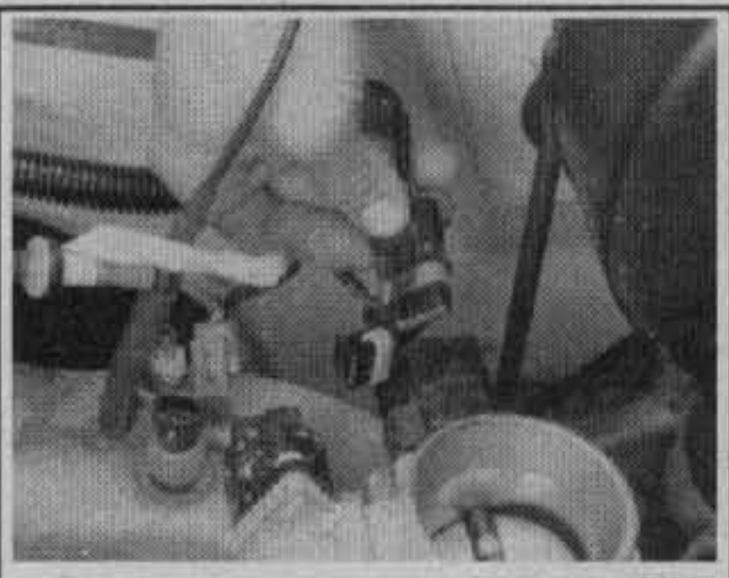

85353071

Fig. 70 Unfasten and tag the electrical connector from the Throttle Position Sensor (TPS)

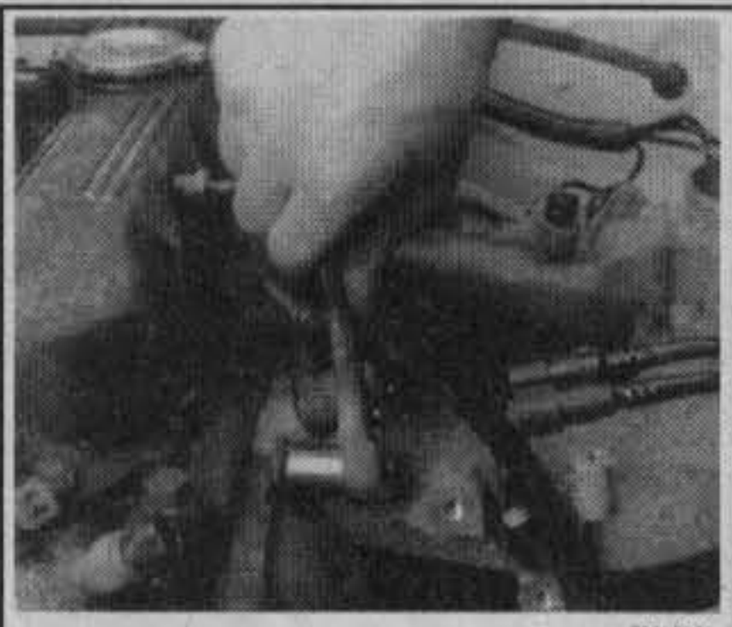

85353072

Fig. 71 Removing the intake manifold retaining bolts

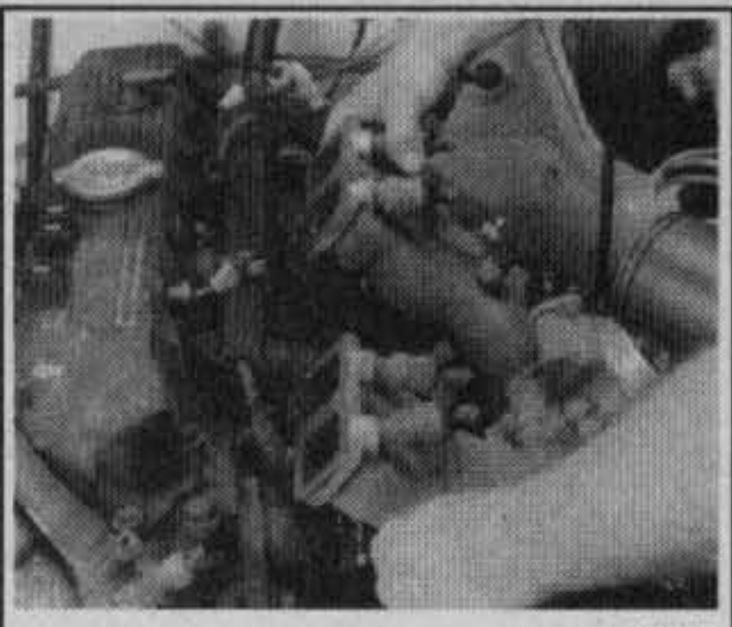

85353073

Fig. 72 Removing the intake manifold from the vehicle

13. Install the intake manifold gasket over the locating dowels.
14. Install the manifold in place and finger tighten the mounting bolts.
15. Torque the manifold fasteners as follows:
    a. Tighten fastener No. 1 to 30 ft. lbs. (41 Nm).
    b. Tighten fasteners No. 2 through No. 7 to 23 ft. lbs. (31 Nm).
16. Connect the EGR valve tube to the intake manifold.
17. Connect the throttle valve linkage, if equipped with automatic transmission.
18. Connect the intake manifold electric heater wire connector, as required.
19. On vehicles equipped with power steering, install the power steering pump and its mounting bracket.
20. Connect the vacuum to from the EGR valve.
21. Connect the system coolant temperature sender wire connector (located on the intake manifold). Connect the air temperature sensor wire, if equipped.
22. If equipped, install the vacuum advance CTO valve vacuum hoses.
23. Install the throttle body. Torque the throttle body mounting bolts to 14 ft. lbs. (19 Nm).
24. Connect the PCV valve vacuum hose to the intake manifold.
25. Connect the throttle cable to the bellcrank.
26. Connect the fuel pipe.
27. Connect the coolant hoses to the intake manifold.
28. Install the air cleaner.
29. Connect the negative battery cable.
30. Fill the cooling system.

4.0L Engine

See Figure 73

➡The intake and exhaust manifold are mounted externally on the left side of the engine and are attached to the cylinder head. They are removed as a unit.

1. Disconnect the negative battery cable.
2. Remove the air cleaner assembly.
3. Disconnect the accelerator cable, cruise control cable, if equipped and transmission line pressure cable.
4. Disconnect all electrical connectors on the intake manifold.
5. Disconnect and remove the fuel supply and return lines from the fuel rail assembly.
6. Remove the fuel rail and injectors.
7. Loosen the accessory drive belts.
8. Remove the power steering pump.
9. Disconnect the exhaust pipe from the manifold and discard the seal.
10. Remove the intake and exhaust manifold.

To install:

11. Clean the gasket mating surfaces thoroughly. Install a new gasket over the alignment dowels and position the exhaust manifold to the cylinder head. Install bolt No. 3 finger-tight.
12. Install the intake manifold and the remaining bolts and washers.
13. Tighten bolts, in sequence, to the following torque specifications:
    a. Bolts 1–5—24 ft. lbs. (33 Nm)
    b. Bolts 6 and 7—17 ft. lbs. (23 Nm)
    c. Bolts 8–11—24 ft. lbs. (33 Nm)

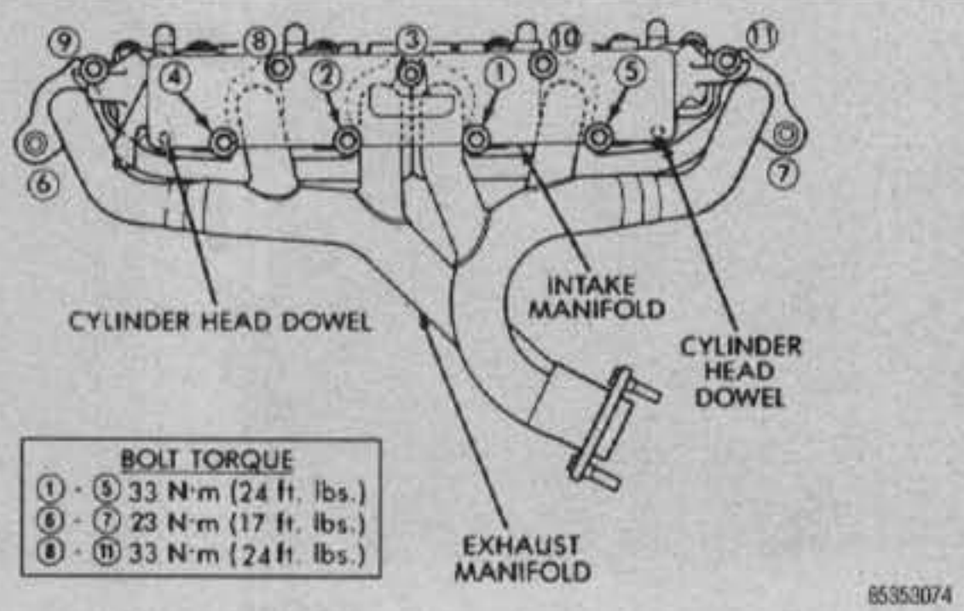

Fig. 73 Intake/exhaust manifold installation and torque sequence—4.0L engine

14. Install the fuel rail and injectors.
15. Install the power steering pump and tension the accessory belt to specification.
16. Using new O-rings, install the fuel supply and return lines.
17. Connect all electrical connectors, vacuum connectors, throttle cable, cruise control cable and transmission lines pressure cable.
18. Install the air cleaner assembly.
19. Using a new seal, connect the exhaust pipe to the manifold and torque the bolts to 23 ft. lbs. (31 Nm).
20. Connect the negative battery cable.
21. Start the engine and check for leaks.

4.2L Engine

See Figures 74 and 75

The intake manifold and exhaust manifold are mounted externally on the left side of the engine and are attached to the cylinder head. The intake and exhaust manifolds are removed as a unit. On some engines, an exhaust gas recirculation valve is mounted on the side of the intake manifold.

1. Remove the air cleaner and carburetor.
2. Disconnect the accelerator cable from the accelerator bellcrank.
3. Disconnect the PCS vacuum hose from the intake manifold.
4. Disconnect the distributor vacuum hose and electrical wires at the TCS solenoid vacuum valve.
5. Remove the TCS solenoid vacuum valve and bracket from the intake manifold. In some cases it might not be necessary to remove the TCS unit.
6. If so equipped, disconnect the EGR valve vacuum hoses.
7. Remove the power steering mounting bracket and pump and set it aside without disconnecting the hoses.
8. Remove the EGR valve, if so equipped.
9. Disconnect the exhaust pipe from the manifold flange. Disconnect the spark GTO hoses and remove the oxygen sensor.
10. Remove the manifold attaching bolts, nuts and clamps.

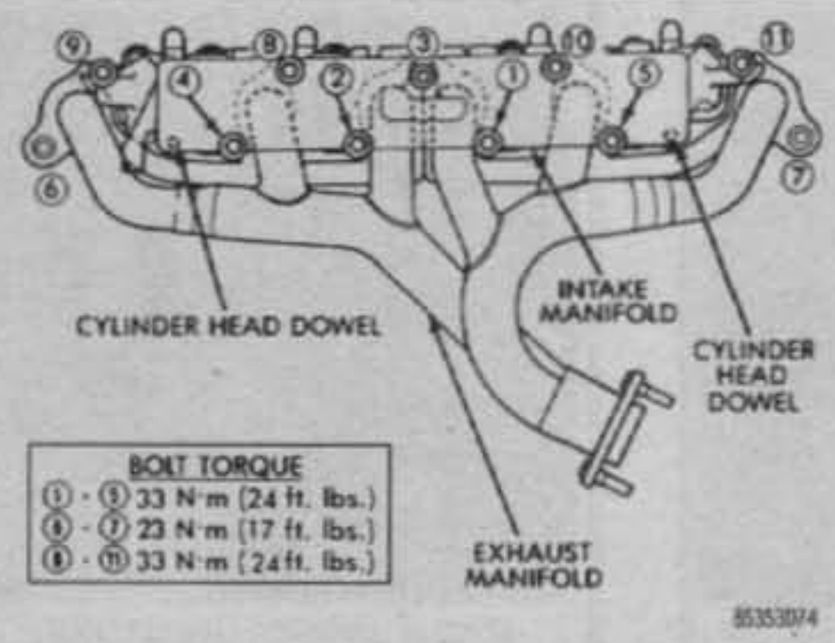

Fig. 74 Intake/exhaust manifold installation and torque sequence—4.2L engine

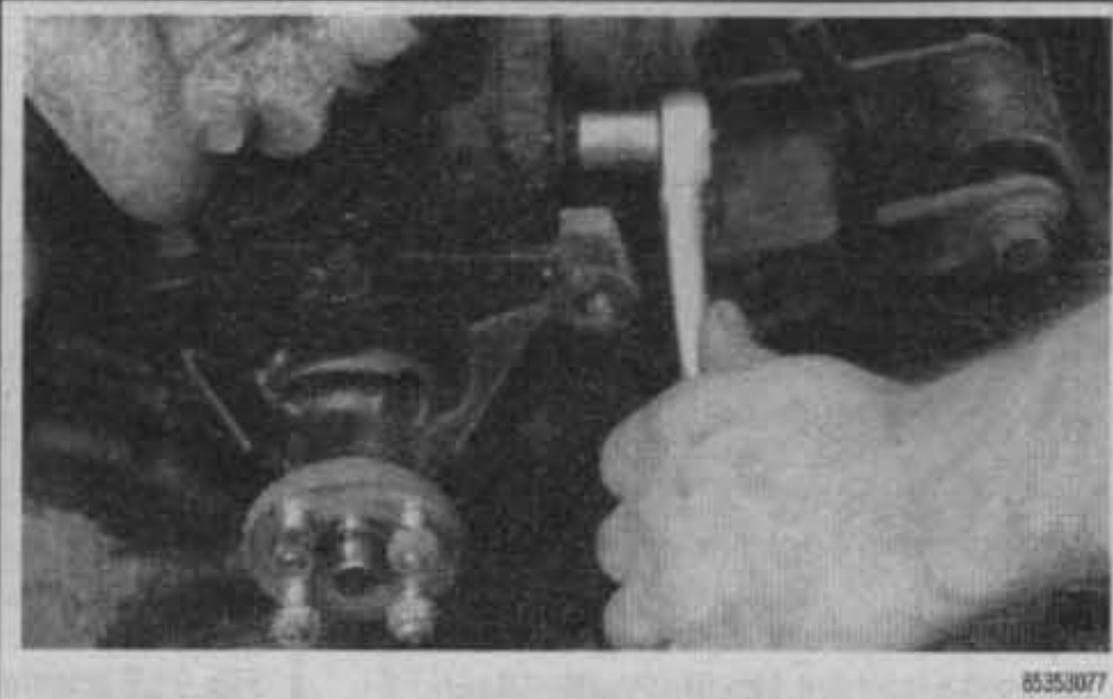

Fig. 76 Removing the exhaust manifold retaining bolts

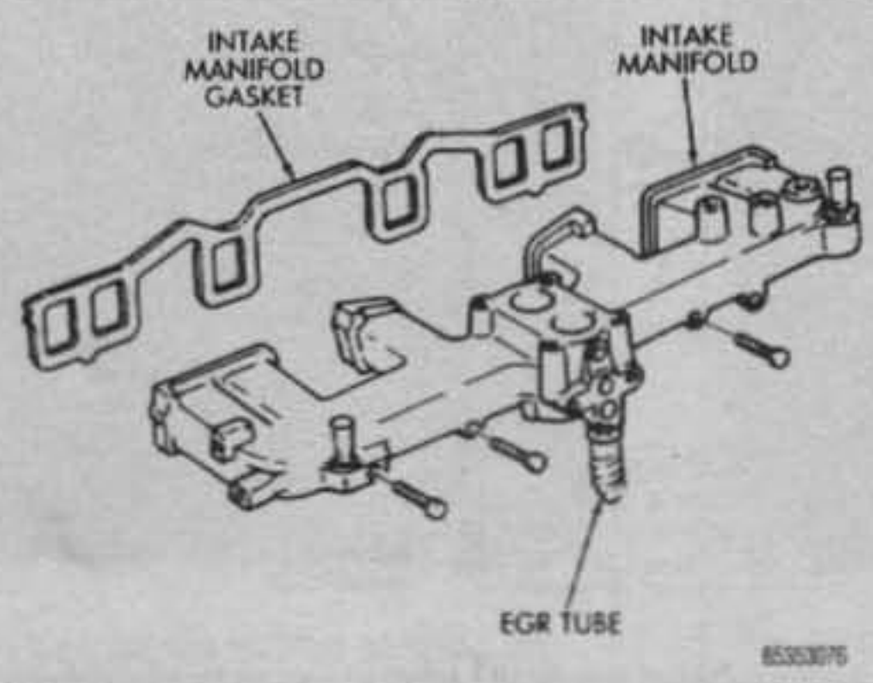

Fig. 75 Intake manifold installation—4.2L engine

Fig. 77 Removing the exhaust manifold from the vehicle

11. Separate the intake manifold and exhaust manifold from the engine as an assembly. Discard the gasket.
12. If either manifold is to be replaced, they should be separated at the heat riser area.

To install:

13. Clean the mating surfaces of the manifolds and the cylinder head before replacing the manifolds. Replace them in reverse order of the above procedure with a new gasket. Tighten the bolts and nuts to the specified torque in the proper sequence.
14. Connect the exhaust pipe to the manifold flange. Torque the nuts to 20 ft. lbs. (27 Nm). Connect the spark CTO hoses and install the oxygen sensor.
15. Install the EGR valve, if so equipped.
16. Install the power steering mounting bracket and pump.
17. If so equipped, connect the EGR valve vacuum hoses.
18. Install the TCS solenoid vacuum valve and bracket to the intake manifold.
19. Connect the distributor vacuum hose and electrical wires at the TCS solenoid vacuum valve.
20. Connect the PCS vacuum hose to the intake manifold.
21. Connect the accelerator cable to the accelerator bellcrank.
22. Install the air cleaner and carburetor.

Exhaust Manifold

REMOVAL & INSTALLATION

2.5L Engine

See Figures 58, 59, 76 and 77

1. Remove the intake manifold.
2. Disconnect the EGR tube.
3. Disconnect the exhaust pipe at the manifold.
4. Disconnect the oxygen sensor wire.
5. Support the manifold and remove the nuts from the studs.
6. If a new manifold is being installed, transfer the oxygen sensor. Torque the sensor to 35 ft. lbs. (47 Nm).
7. Thoroughly clean the gasket mating surfaces of the manifold and head.
8. Install the manifold, using a new gasket. Torque the nuts to 23 ft. lbs. (31 Nm).
9. Connect the oxygen sensor wire.
10. Connect the exhaust pipe at the manifold.
11. Connect the EGR tube.
12. Install the intake manifold.

4.0L and 4.2L Engines

See Figures 73 and 74

The intake and exhaust manifolds on 4.0L and 4.2L engines must be removed together. See the procedure for removing and installing the intake manifold.

Radiator

REMOVAL & INSTALLATION

See Figures 78 thru 83

1. Drain the radiator by opening the drain cock and removing the radiator pressure cap.

CAUTION

When draining the coolant, keep in mind that cats and dogs are attracted by ethylene glycol antifreeze, and are quite likely to drink any that is left in an uncovered container or in puddles on the ground. This will prove fatal in sufficient quantity. Always drain the coolant into a sealable container. Coolant should be reused unless it is contaminated or several years old.

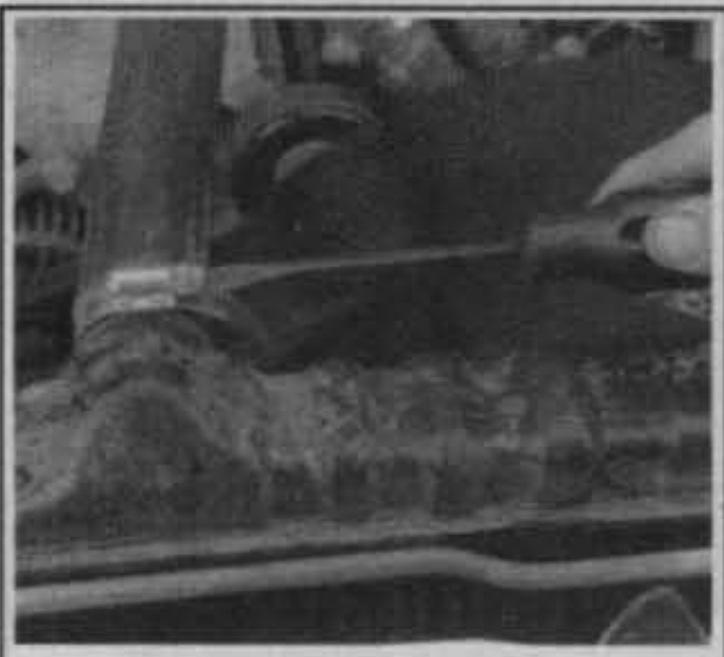

85353079

Fig. 78 Remove the top hose at the radiator

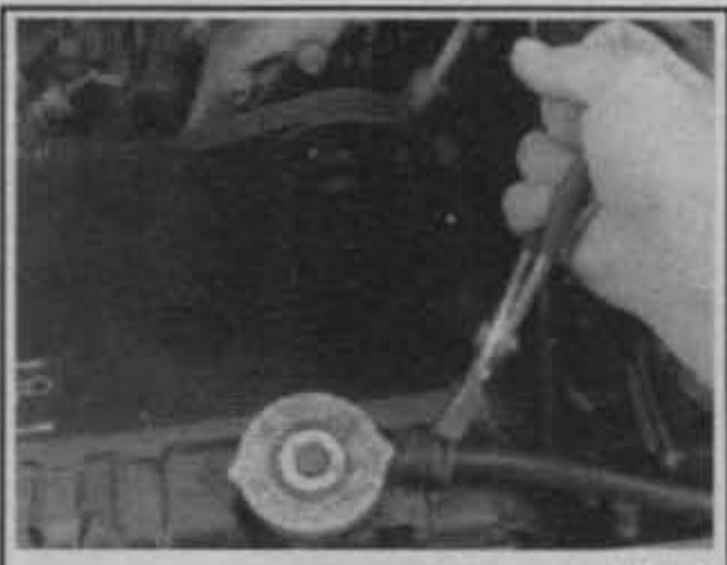

85353080

Fig. 79 Squeeze the radiator overflow hose clamp at the radiator to loosen the hose

85353081

Fig. 80 Twist and pull the hose off of the overflow tube

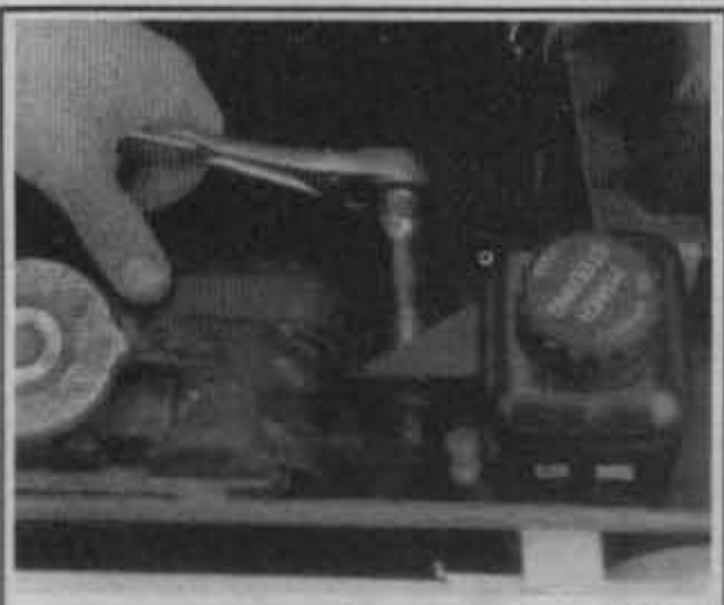

85353082

Fig. 81 Remove the shroud retaining bolts and move the shroud toward the fan

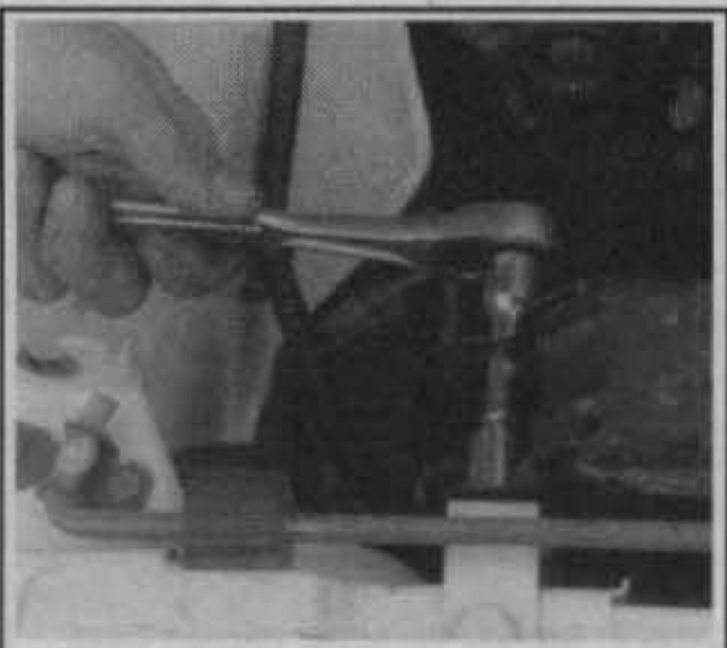

85353083

Fig. 82 Remove the radiator retaining bolts

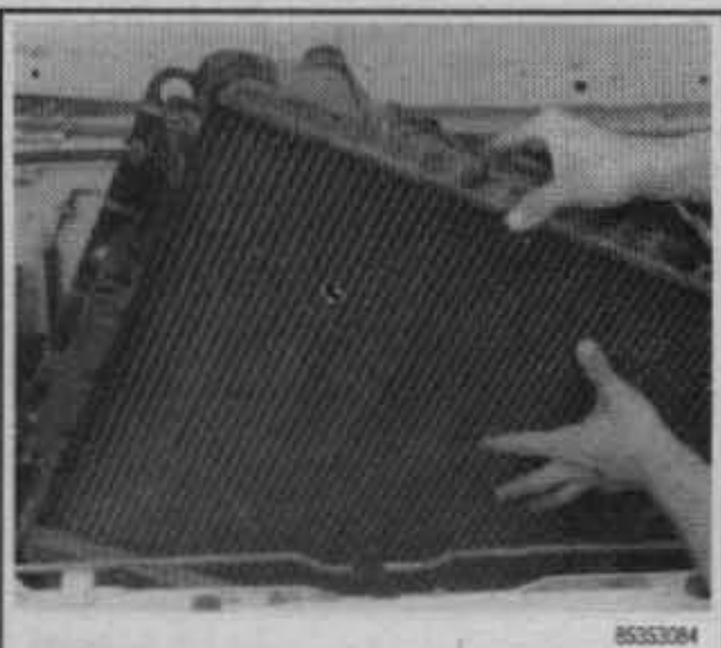

85353084

Fig. 83 Remove the radiator from the vehicle

2. Remove the upper and lower hose clamps and hoses at the radiator.
3. Disconnect the automatic transmission oil cooler lines at the radiator, if so equipped. Remove the radiator shroud from the radiator, if so equipped.
4. Remove all attaching screws that secure the radiator to the radiator body support.
5. Remove the radiator.
6. Replace in reverse order of the above procedure.

Transmission Oil Cooler

The transmission main oil cooler is located in the radiator lower tank. The cooler is not a serviceable component. If the cooler is damaged in any way, the radiator will have to be replaced.

Water Pump

REMOVAL & INSTALLATION

♦ See Figures 84 thru 94

➡Some vehicles equipped with air conditioning and a serpentine drive belt use a reverse-rotating water pump coupled with a viscous fan drive assembly. These components are identified by the word REVERSE stamped on the cover of the viscous drive and on the inner side of the fan. The word REV is also cast into the body of the water pump.

1. Drain the cooling system.

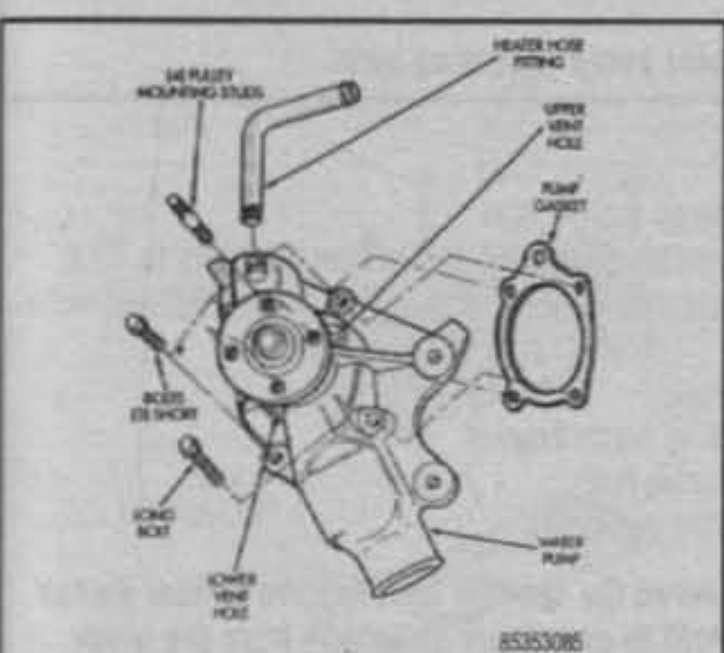

85353085

Fig. 84 Water pump removal and installation—2.5L, 4.0L and 4.2L engines

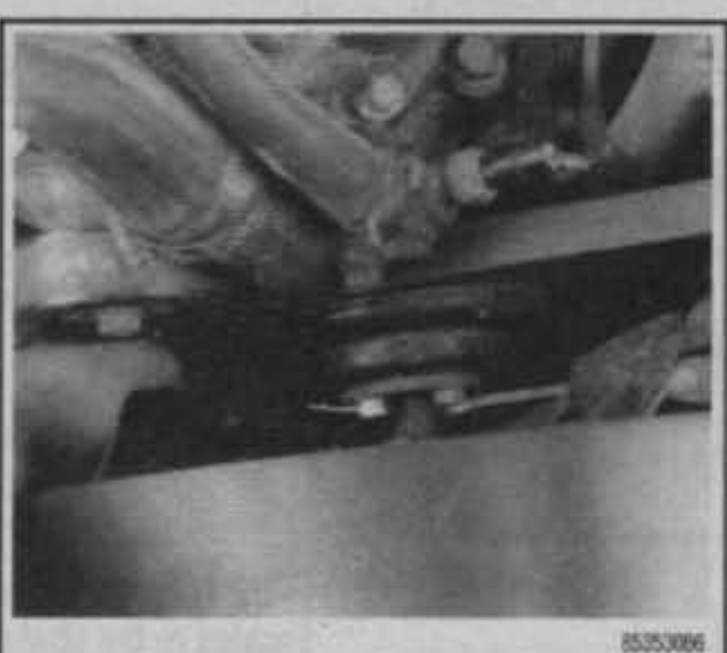

85353086

Fig. 85 Removing the fan and pulley attaching bolts

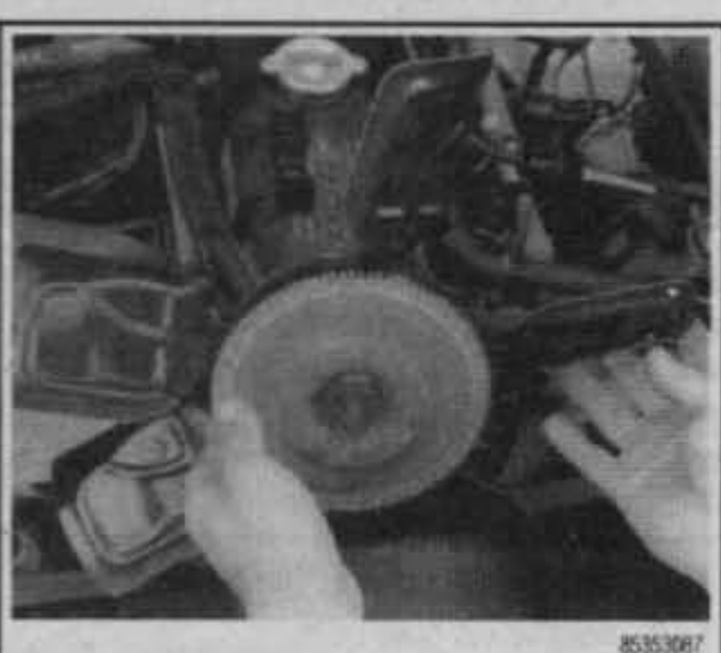

85353087

Fig. 86 Removing the fan and pulley assembly from the vehicle

85353088

Fig. 87 Removing the fan shroud from the vehicle

85353089

Fig. 88 Removing the fan pulley from the water pump

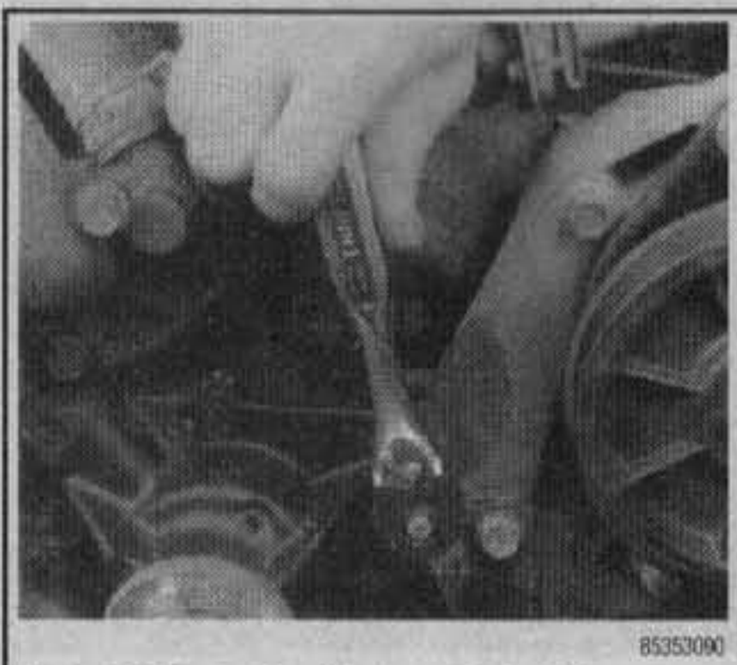

85353090

Fig. 89 Removing the power steering pump retaining bolts

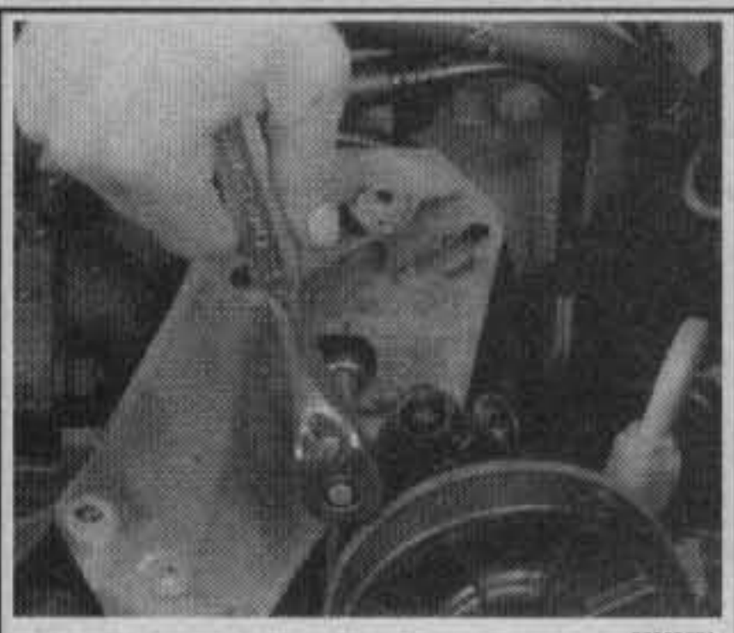

85353091

Fig. 90 Removing the power steering pump and bracket retaining bolts

85353092

Fig. 91 Remove the power steering pump and move it aside without disconnecting the fluid lines

85353093

Fig. 92 Remove the power steering pump mounting bracket

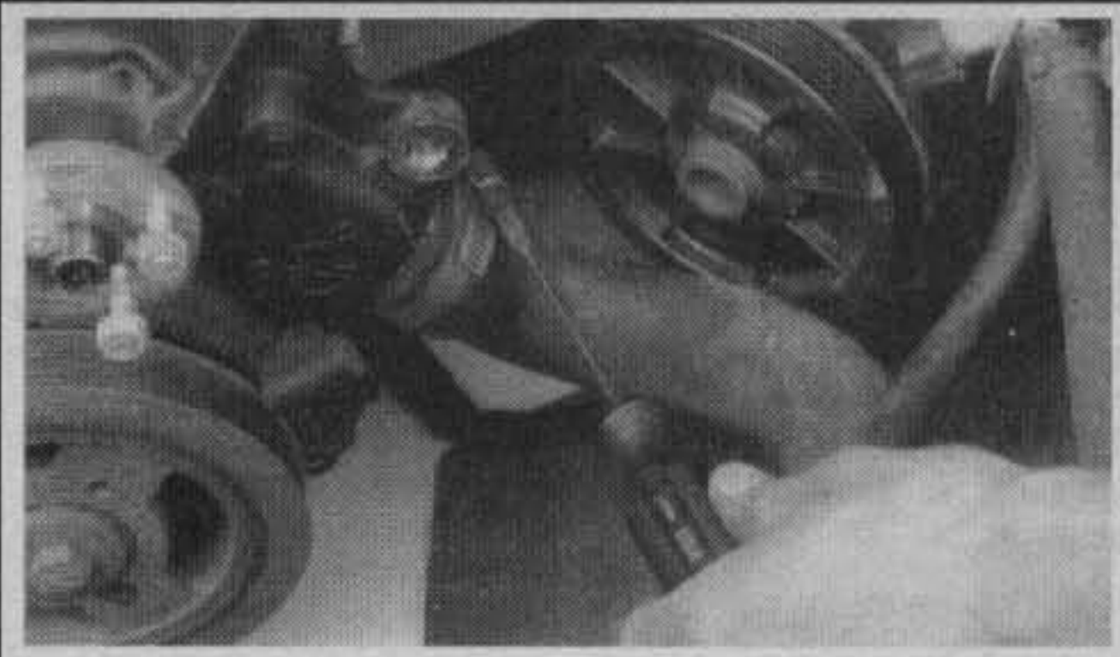

85353094

Fig. 93 Disconnect the lower hose at the water pump

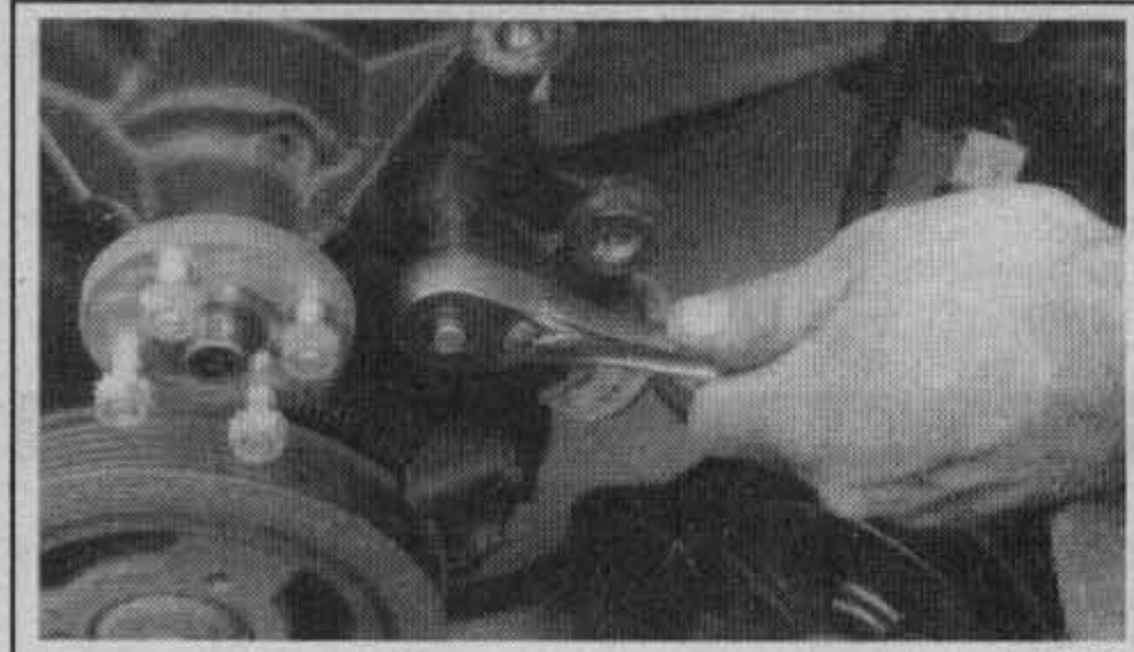

85353095

Fig. 94 Removing the water pump mounting bolts

CAUTION

When draining the coolant, keep in mind that cats and dogs are attracted by ethylene glycol antifreeze, and are quite likely to drink any that is left in an uncovered container or in puddles on the ground. This will prove fatal in sufficient quantity. Always drain the coolant into a sealable container. Coolant should be reused unless it is contaminated or several years old.

2. Disconnect the hoses at the pump.
3. Remove the drive belts.
4. Remove the fan and shroud.
5. Remove the power steering pump bracket.
6. Unbolt and remove the pump.

To install:

7. Clean the mating surfaces thoroughly.
8. Using a new gasket, install the pump and torque the bolts to 13 ft. lbs. (18 Nm) for 1987–92 vehicles, or 22 ft. lbs. (30 Nm) for 1993–95 vehicles.
9. Install the fan and shroud.
10. Install the power steering pump bracket.
11. Install and adjust the drive belts.
12. Connect the hoses at the pump.

➡On 1989–90 engines, remove the coolant temperature sensor switch located in the intake manifold to permit air to escape from the block. Reinstall the switch when the system is filled.

13. Fill the cooling system.

Cylinder Head

REMOVAL & INSTALLATION

➡It is important to note that each engine has its own head bolt tightening sequence and torque. Incorrect tightening procedure may cause head warpage and compression loss. Correct sequence and torque for each engine model is shown in this section.

2.5L Engine

1987-88 VEHICLES

▶ See Figures 95 and 96

1. Disconnect the battery ground.
2. Drain the cooling system.

CAUTION

When draining the coolant, keep in mind that cats and dogs are attracted by ethylene glycol antifreeze, and are quite likely to drink any that is left in an uncovered container or in puddles on the ground. This will prove fatal in sufficient quantity. Always drain the coolant into a sealable container. Coolant should be reused unless it is contaminated or several years old.

3. Disconnect the hoses at the thermostat housing.
4. Remove the air cleaner.
5. Remove the rocker arm cover. The cover seal is RTV sealer. Break the seal with a clean putty knife or razor blade. Don't attempt to remove the cover until the seal is broken. To remove the cover, pry where indicated at the bolt holes.
6. Remove the rocker arms. Keep them in order!
7. Remove the pushrods. Keep them in order!
8. Remove the power steering pump bracket.
9. Suspend the pump out of the way.
10. Remove the intake and exhaust manifolds.
11. Remove the air conditioning compressor drive belt.
12. Loosen the alternator drive belt.
13. Remove the compressor/alternator bracket mounting bolt.
14. Unbolt the compressor and suspend it out of the way. DO NOT DISCONNECT THE REFRIGERANT LINES!
15. Remove the spark plugs.
16. Disconnect the temperature sending unit wire.
17. Remove the head bolts.
18. Lift the head off the engine and place it on a clean workbench.
19. Remove the head gasket.

To install:

20. Thoroughly clean the gasket mating surfaces. Remove all traces of old gasket material. Remove all carbon deposits from the combustion chambers. Lay a straightedge across the head and check for flatness. Total deviation should not exceed 0.001 in. (0.025mm).

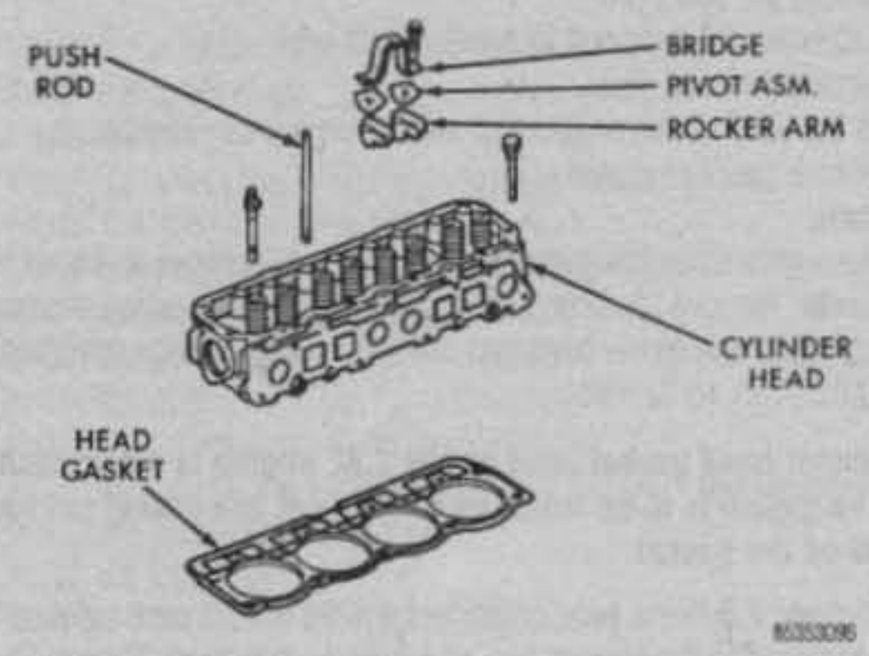

Fig. 95 Cylinder head and components—2.5L engine

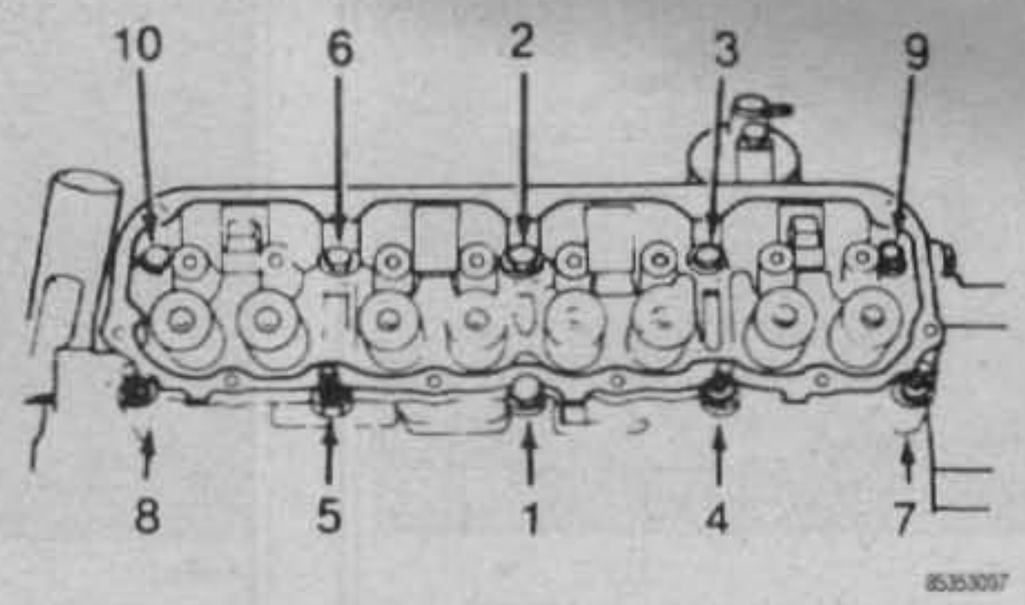

Fig. 96 Cylinder head tightening sequence—1987-88 2.5L engine

21. Do not apply sealant to the head or block. Coat both sides of the gasket with sealer. The gasket should be stamped **TOP** for installation. Place the gasket on the block.
22. Install the head on the block.
23. Coat the threads of stud/bolt No. 8 in the torque sequence illustration, with Loctite 592 or equivalent. Install all the bolts. Tighten bolt Nos. 1 through 7 in three equal steps, in the sequence shown, to 85 ft. lbs. (115 Nm). Then, torque the No. 8 stud/bolt to 75 ft. lbs. (102 Nm).
24. Connect the temperature sending unit wire.
25. Install the spark plugs.
26. Install the compressor.
27. Install the compressor/alternator bracket mounting bolt.
28. Adjust the alternator drive belt.
29. Install the air conditioning compressor drive belt.
30. Install the intake and exhaust manifolds.
31. Install the power steering pump bracket.
32. Install the pushrods. Keep them in order!
33. Install the rocker arms. Keep them in order!
34. Thoroughly clean the mating surfaces of the head and rocker cover. Run a ⅛ in. (3mm) bead of RTV sealer along the length of the sealing surface of the head. Position the cover on the head within 10 minutes of applying the sealer. Torque the cover bolts, in a crisscross pattern, to 55 inch lbs. (6 Nm).
35. Install the air cleaner.
36. Connect the hoses at the thermostat housing.
37. Connect the battery ground.
38. Fill the cooling system.

1989 VEHICLES

▶ See Figures 95, 97, 98 and 99

1. Disconnect the battery ground.
2. Drain the cooling system.

CAUTION

When draining the coolant, keep in mind that cats and dogs are attracted by ethylene glycol antifreeze, and are quite likely to drink any that is left in an uncovered container or in puddles on the ground. This will prove fatal in sufficient quantity. Always drain the coolant into a sealable container. Coolant should be reused unless it is contaminated or several years old.

3. Disconnect the hoses at the thermostat housing.
4. Remove the air cleaner.
5. Remove the rocker arm cover. The cover seal is RTV sealer. Break the seal with a clean putty knife or razor blade. Don't attempt to remove the cover until the seal is broken. To remove the cover, pry where indicated at the bolt holes.
6. Remove the rocker arms. Keep them in order!
7. Remove the pushrods. Keep them in order!
8. Remove the power steering pump bracket.
9. Suspend the pump out of the way.
10. Remove the intake and exhaust manifolds.

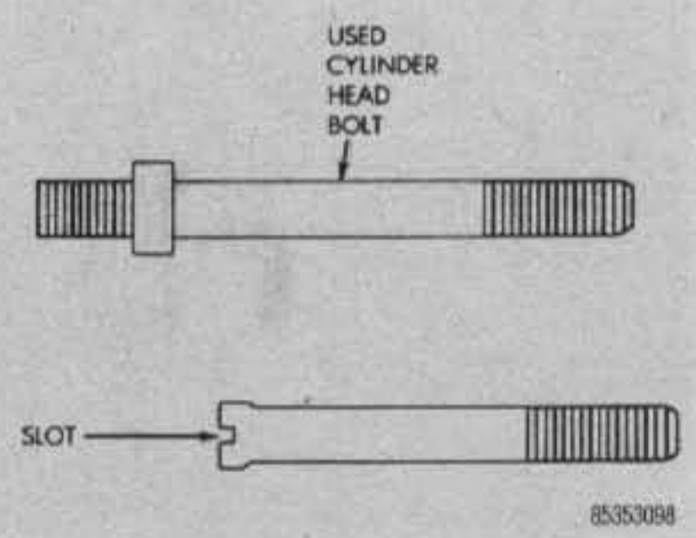

Fig. 97 Fabricate alignment dowels—1989–95 2.5L engines

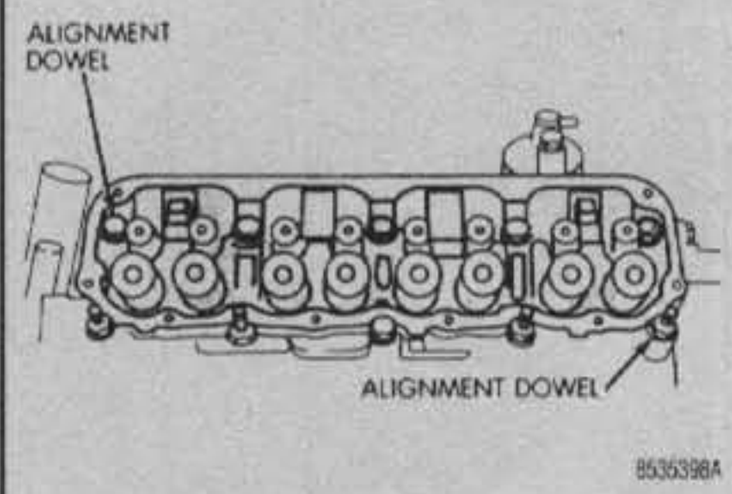

Fig. 98 Alignment dowel locations—1989–95 2.5L engines

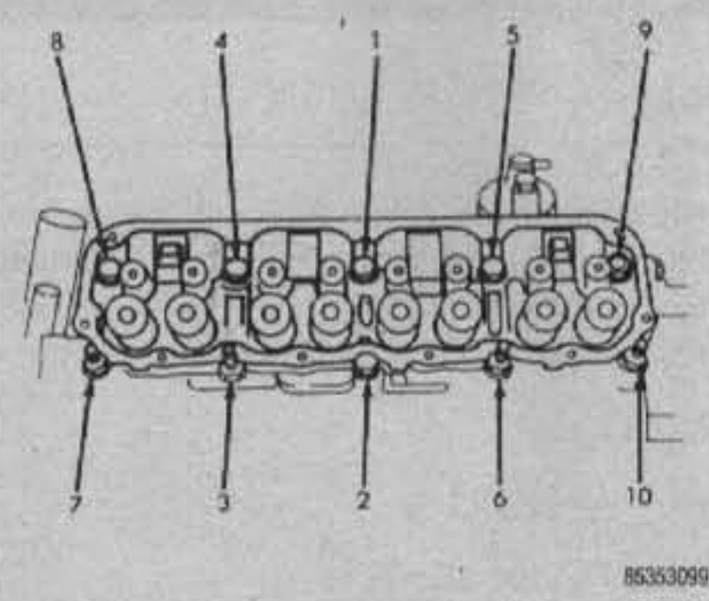

Fig. 99 Cylinder head bolt tightening sequence—1989–95 2.5L engines

11. Remove the air conditioning compressor drive belt.
12. Loosen the alternator drive belt.
13. Remove the compressor/alternator bracket mounting bolt.
14. Unbolt the compressor and suspend it out of the way. DO NOT DISCONNECT THE REFRIGERANT LINES!
15. Remove the spark plugs.
16. Disconnect the temperature sending unit wire.
17. Remove the head bolts.
18. Lift the head off the engine and place it on a clean workbench.
19. Remove the head gasket.

To install:

20. Thoroughly clean the gasket mating surfaces. Remove all traces of old gasket material. Remove all carbon deposits from the combustion chambers. Lay a straightedge across the head and check for flatness. Total deviation should not exceed 0.001 in. (0.025mm).

➡The cylinder head gasket used on the 2.5L engine is a composition gasket. The gasket is to be installed dry. Do not use gasket sealing compound on the gasket.

21. Fabricate 2 cylinder head alignment dowels from 2 used cylinder head bolts. Cut the head of the longest bolt off below the hex head. Then, cut a slot in the top of the dowel to allow easier removal with a screwdriver.
22. Install one dowel in bolt hole No. 10 and the other dowel in bolt hole No. 7.
23. Place the cylinder head gasket over the dowels with the numbers facing up.
24. Place the cylinder head over the dowels.
25. Coat the threads of bolt No. 8 only, with Loctite PST sealant or equivalent.
26. Install all head bolts except Nos. 7 and 10.
27. Tighten the bolts in the sequence shown in the illustration to the following:
    a. Tighten bolts 1 through 10 in sequence to 22 ft. lbs. (30 Nm).
    b. Tighten bolts 1 through 10 in sequence to 45 ft. lbs. (61 Nm).
    c. Recheck bolts 1 through 10 in sequence to verify that they are 45 ft. lbs. (61 Nm).
    d. Tighten bolts 1 through 7 in sequence to 110 ft. lbs. (149 Nm).
    e. Tighten bolt 8 to 100 ft. lbs. (136 Nm).
    f. Tighten bolts 9 and 10 to 110 ft. lbs. (149 Nm).

➡During the final tightening sequence, bolt No. 8 will be tightened to a lower torque than the rest of the bolts. Do not overtighten bolt No. 8.

28. Connect the temperature sending unit wire.
29. Install the spark plugs.
30. Install the compressor.
31. Install the compressor/alternator bracket mounting bolt.
32. Adjust the alternator drive belt.
33. Install the air conditioning compressor drive belt.
34. Install the intake and exhaust manifolds.
35. Install the power steering pump bracket.
36. Install the pushrods. Keep them in order!
37. Install the rocker arms. Keep them in order!
38. Thoroughly clean the mating surfaces of the head and rocker cover and install as outlined earlier in this section.
39. Install the air cleaner.
40. Connect the hoses at the thermostat housing.
41. Connect the battery ground.
42. Fill the cooling system.

1990–95 VEHICLES

➧ See Figures 95, 97 thru 104

1. Disconnect the battery ground.
2. Drain the cooling system.

CAUTION

When draining the coolant, keep in mind that cats and dogs are attracted by ethylene glycol antifreeze, and are quite likely to drink any that is left in an uncovered container or in puddles on the ground. This will prove fatal in sufficient quantity. Always drain the coolant into a sealable container. Coolant should be reused unless it is contaminated or several years old.

3. Disconnect the hoses at the thermostat housing.
4. Remove the air cleaner.
5. Remove the rocker arm cover as outlined earlier in this section.
6. Remove the rocker arms. Keep them in order!
7. Remove the pushrods. Keep them in order!
8. Remove the power steering pump bracket.
9. Suspend the pump out of the way.
10. Remove the intake and exhaust manifolds.
11. Remove the air conditioning compressor drive belt.
12. Loosen the alternator drive belt.
13. Remove the compressor/alternator bracket mounting bolt.
14. Unbolt the compressor and suspend it out of the way. DO NOT DISCONNECT THE REFRIGERANT LINES!
15. Remove the spark plugs.
16. Disconnect the temperature sending unit wire.
17. Remove the head bolts.
18. Lift the head off the engine and place it on a clean workbench.
19. Remove the head gasket.

To install:

20. Thoroughly clean the gasket mating surfaces. Remove all traces of old gasket material. Remove all carbon deposits from the combustion chambers. Lay a straightedge across the head and check for flatness. Total deviation should not exceed 0.001 in. (0.025mm).

➡The cylinder head gasket used on the 2.5L engine is a composition gasket. The gasket is to be installed dry. Do not use gasket sealing compound on the gasket.

21. Fabricate 2 cylinder head alignment dowels from 2 used cylinder head bolts. Cut the head of the longest bolt off below the hex head. Then cut a slot in the top of the dowel to allow easier removal with a screwdriver.

Fig. 100 Disconnect the coolant hoses at the thermostat housing

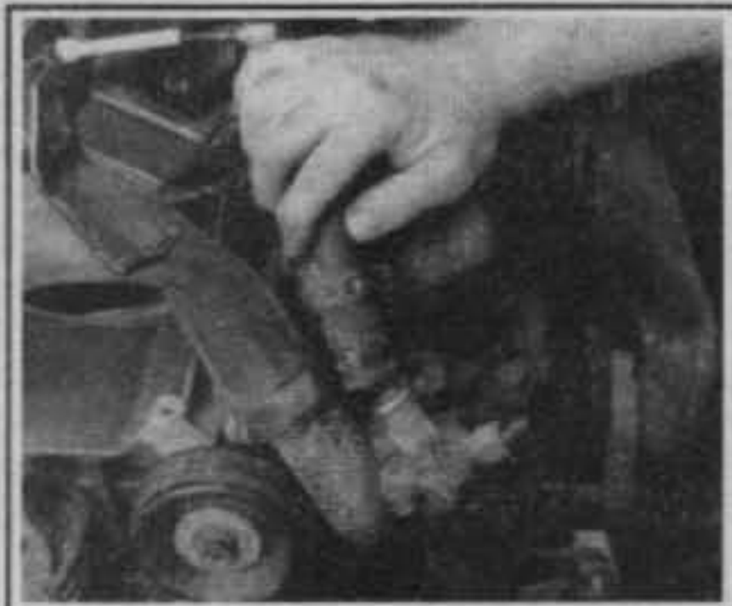

Fig. 101 Disconnect the coolant hoses at the thermostat housing

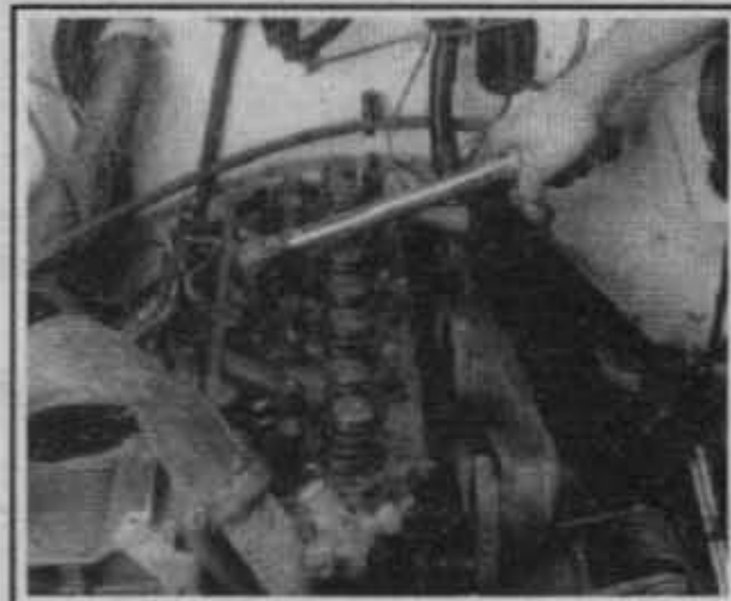

Fig. 102 Remove the cylinder head-to-block bolts

Fig. 103 Cylinder head bolt removed from the head

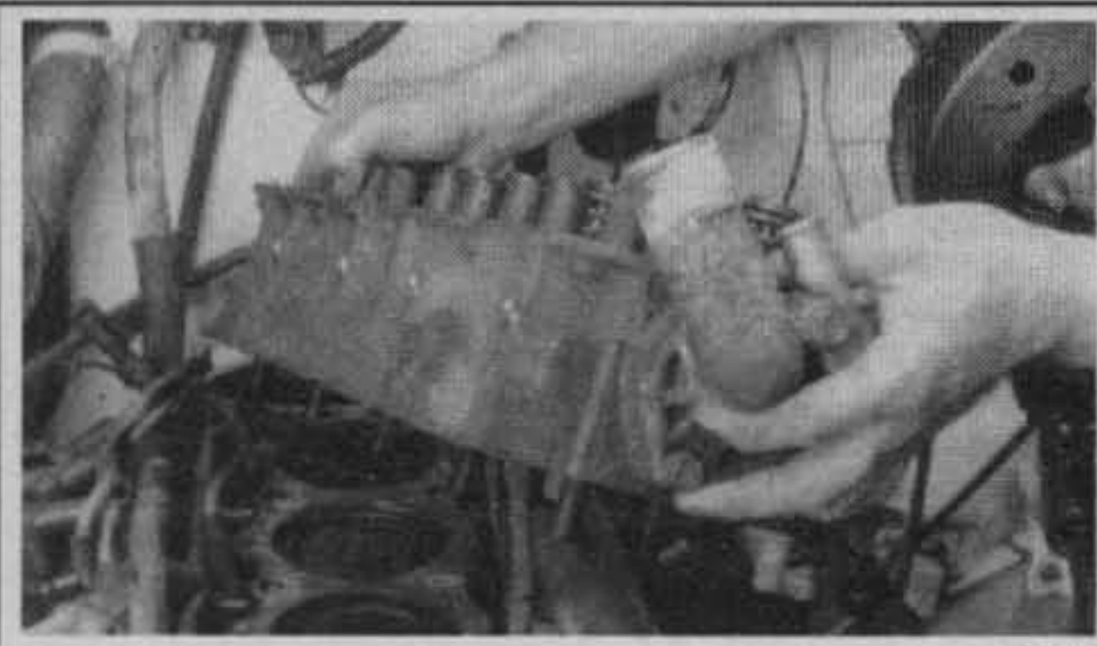

Fig. 104 Removing the cylinder head from the engine block

22. Install one dowel in bolt hole No. 10 and the other dowel in bolt hole No. 8.
23. Place the cylinder head gasket over the dowels with the numbers facing up.
24. Place the cylinder head over the dowels.
25. Coat the threads of bolt No. 7 only, with Loctite PST sealant or equivalent.
26. Install all head bolts except Nos. 8 and 10.
27. Tighten the bolts in the sequence shown in the illustration to the following:
    a. Tighten bolts 1 through 10 in sequence to 22 ft. lbs. (30 Nm).
    b. Tighten bolts 1 through 10 in sequence to 45 ft. lbs. (61 Nm).
    c. Recheck bolts 1 through 10 in sequence to verify that they are 45 ft. lbs. (61 Nm).
    d. Tighten bolts 1 through 6 in sequence to 110 ft. lbs. (149 Nm).
    e. Tighten bolt 7 to 100 ft. lbs. (136 Nm).
    f. Tighten bolts 8 through 10 to 110 ft. lbs. (149 Nm).

➡During the final tightening sequence, bolt No. 7 will be tightened to a lower torque than the rest of the bolts. Do not overtighten bolt No. 7.

28. Connect the temperature sending unit wire.
29. Install the spark plugs.
30. Install the compressor.
31. Install the compressor/alternator bracket mounting bolt.
32. Adjust the alternator drive belt.
33. Install the air conditioning compressor drive belt.
34. Install the intake and exhaust manifolds.
35. Install the power steering pump bracket.
36. Install the pushrods. Keep them in order!
37. Install the rocker arms. Keep them in order!
38. Thoroughly clean the mating surfaces of the head and rocker cover and install as outlined earlier in this section.
39. Install the air cleaner.
40. Connect the hoses at the thermostat housing.
41. Connect the battery ground.
42. Fill the cooling system.

4.0L Engine

▶ See Figures 105 and 106

1. Disconnect the battery ground.
2. Drain the cooling system.

CAUTION

When draining the coolant, keep in mind that cats and dogs are attracted by ethylene glycol antifreeze, and are quite likely to drink any that is left in an uncovered container or in puddles on the ground. This will prove fatal in sufficient quantity. Always drain the coolant into a sealable container. Coolant should be reused unless it is contaminated or several years old.

3. Disconnect the hoses at the thermostat housing.

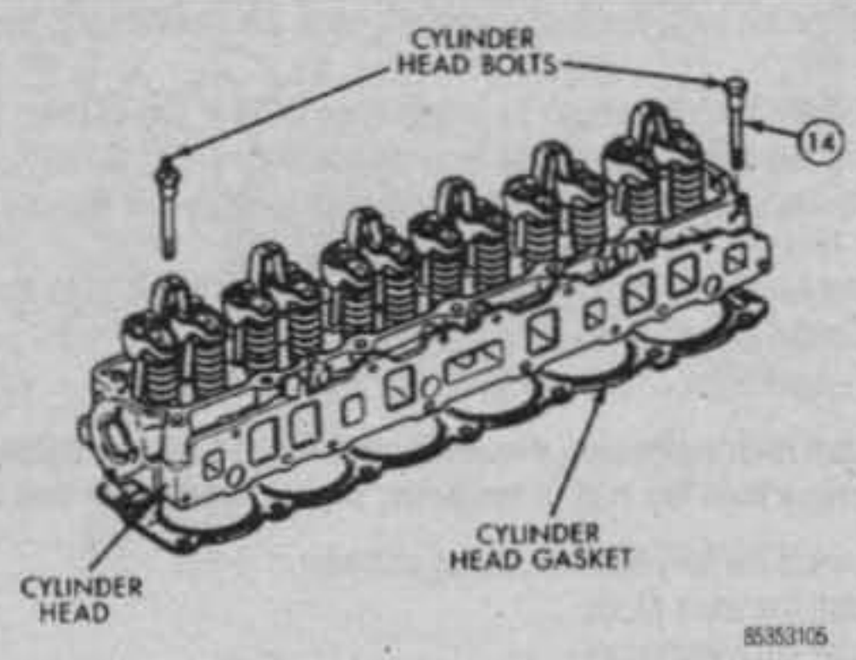

Fig. 105 Cylinder head bolt No. 14 location—4.0L engine

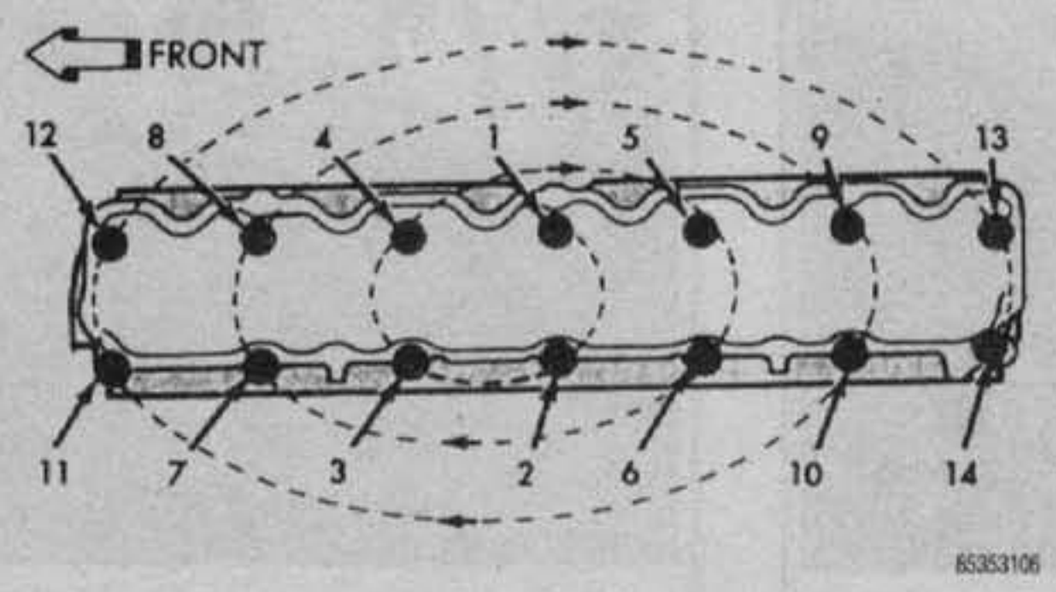

Fig. 106 Cylinder head bolt tightening sequence—4.0L and 4.2L engines

4. Remove the air cleaner.
5. Remove the rocker arm cover as outlined earlier in this section.
6. Remove the rocker arms. Keep them in order!
7. Remove the pushrods. Keep them in order!
8. Remove the power steering pump bracket.
9. Suspend the pump out of the way.
10. Remove the intake and exhaust manifolds.
11. Remove the air conditioning compressor drive belt.
12. Loosen the alternator drive belt.
13. Remove the compressor/alternator bracket mounting bolt.
14. Unbolt the compressor and suspend it out of the way. DO NOT DISCONNECT THE REFRIGERANT LINES!
15. Remove the spark plugs.
16. Disconnect the temperature sending unit wire.
17. Remove the head bolts.

➡Bolt No. 14 cannot be removed until the head is moved forward.

18. Pull bolt No. 14 out as far as it will go, then suspend the bolt in this position (tape around the bolt).
19. Lift the head off the engine and place it on a clean workbench.
20. Remove the head gasket.

To install:

21. Thoroughly clean the gasket mating surfaces. Remove all traces of old gasket material. Remove all carbon deposits from the combustion chambers. Lay a straightedge across the head and check for flatness. Total deviation should not exceed 0.001 in. (0.025mm).

➡The cylinder head gasket used on the 4.0L engine is a composition gasket. The gasket is to be installed dry. Do not use gasket sealing compound on the gasket.

22. Place the cylinder head gasket over the engine with the numbers facing up.
23. With the No. 14 bolt held in place (tape around the bolt), install the cylinder head. Remove the tape from bolt No 14.
24. Coat the threads of stud bolt No. 11 only, with Loctite 592 sealant or equivalent.
25. Tighten the bolts in the sequence shown in the illustration to the following:
    a. Tighten bolts 1 through 14 in sequence to 22 ft. lbs. (30 Nm).
    b. Tighten bolts 1 through 14 in sequence to 45 ft. lbs. (61 Nm).
    c. Recheck bolts 1 through 14 in sequence to verify that they are 45 ft. lbs. (61 Nm).
    d. Tighten bolts 1 through 10 in sequence to 110 ft. lbs. (149 Nm).
    e. Tighten bolt 11 to 100 ft. lbs. (136 Nm).
    f. Tighten bolts 12 through 14 to 110 ft. lbs. (149 Nm).

➡During the final tightening sequence, bolt No. 11 will be tightened to a lower torque than the rest of the bolts. Do not overtighten bolt No. 11.

26. Connect the temperature sending unit wire.
27. Install the spark plugs.
28. Install the compressor.
29. Install the compressor/alternator bracket mounting bolt.
30. Adjust the alternator drive belt.
31. Install the air conditioning compressor drive belt.
32. Install the intake and exhaust manifolds.
33. Install the power steering pump bracket.
34. Install the pushrods. Keep them in order!
35. Install the rocker arms. Keep them in order!
36. Thoroughly clean the mating surfaces of the head and rocker cover and install as outlined earlier in this section.
37. Install the air cleaner.
38. Connect the hoses at the thermostat housing.
39. Connect the battery ground.
40. Fill the cooling system.

4.2L Engine

▶ See Figure 106

1. Drain the cooling system and disconnect the hoses at the thermostat housing.

CAUTION

When draining the coolant, keep in mind that cats and dogs are attracted by ethylene glycol antifreeze, and are quite likely to drink any that is left in an uncovered container or in puddles on the ground. This will prove fatal in sufficient quantity. Always drain the coolant into a sealable container. Coolant should be reused unless it is contaminated or several years old.

2. Remove the cylinder head cover (valve cover), the gasket, the rocker arm assembly, and the pushrods.

➡The pushrods must be replaced in their original positions.

3. Remove the intake and exhaust manifold from the cylinder head.
4. Disconnect the spark plug wires and the spark plugs to avoid damaging them.
5. Disconnect the temperature sending unit wire, ignition coil and bracket assembly from the engine.
6. Remove the cylinder head bolts, the cylinder head and gasket from the block.
7. Thoroughly clean the gasket mating surfaces. Remove all traces of old gasket material. Remove all carbon deposits from the combustion chambers. Lay a straightedge across the head and check for flatness. Total deviation should not exceed 0.001 in. (0.025mm).

To install:

8. Do not apply sealant to the head or block. Coat both sides of the gasket with sealer. The gasket should be stamped TOP for installation. Place the gasket on the block.
9. Install the head on the block. Insert the bolts and tighten them, in sequence, to the proper torque, in three progressive passes. Torque all bolts to 85 ft. lbs. (115 Nm), except No. 11 in the torque sequence, which should be coated with sealer and torqued to 75 ft. lbs. (102 Nm).
10. Connect the temperature sending unit wire, ignition coil and bracket assembly at the engine.
11. Install the spark plugs and connect the spark plug wires.
12. Install the intake and exhaust manifold on the cylinder head.
13. Install the the rocker arm assembly, and the pushrods.

➡The pushrods must be replaced in their original positions.

14. Install the cylinder head cover (valve cover) and the gasket.
15. Connect the hoses at the thermostat housing.
16. Fill the cooling system.

Valves and Springs

▶ See Figure 107

➡Fabricate a valve arrangement board to use when you remove the valves, which will indicate the port in which each valve was originally installed. Also note that the valve keys, rotators, caps, etc. should be arranged in a manner which will allow you to install them on the valve on which they were originally used.

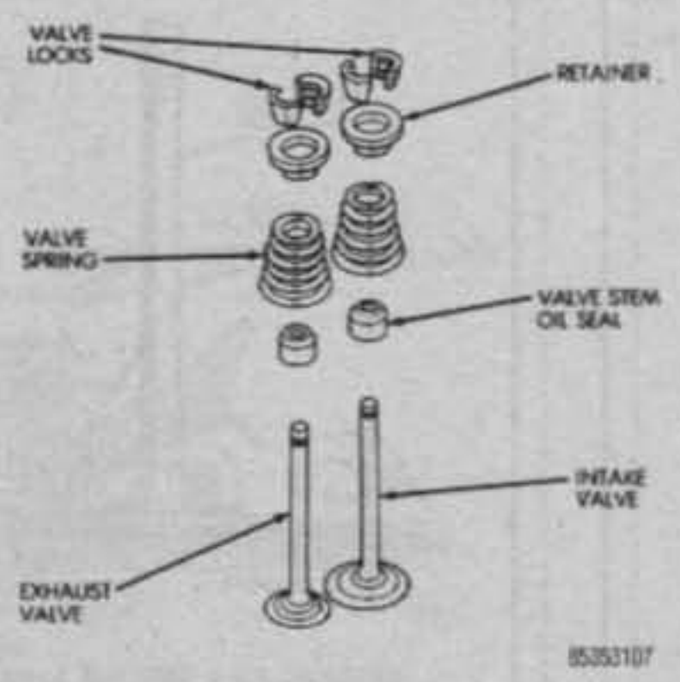

Fig. 107 Valve and valve components

REMOVAL

See Figures 108 and 109

1. Remove the cylinder head from the engine.
2. Remove the rocker arm assemblies.
3. Using a spring compressor, compress the valve springs and remove the keepers (locks). Relax the compressor, then remove the washers or retainers, the springs and, if equipped, the lower washers. Keep all parts in order.

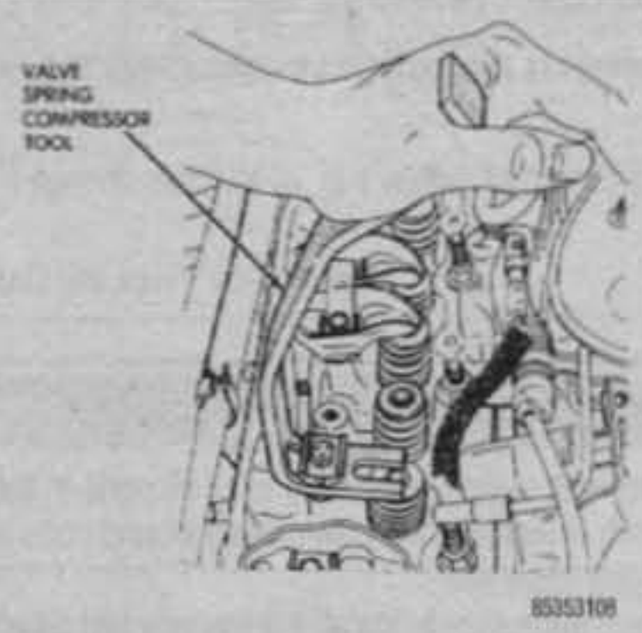

Fig. 108 Using a lever-type valve spring compressor tool. With the retainer and spring compressed, the valve locks can be removed

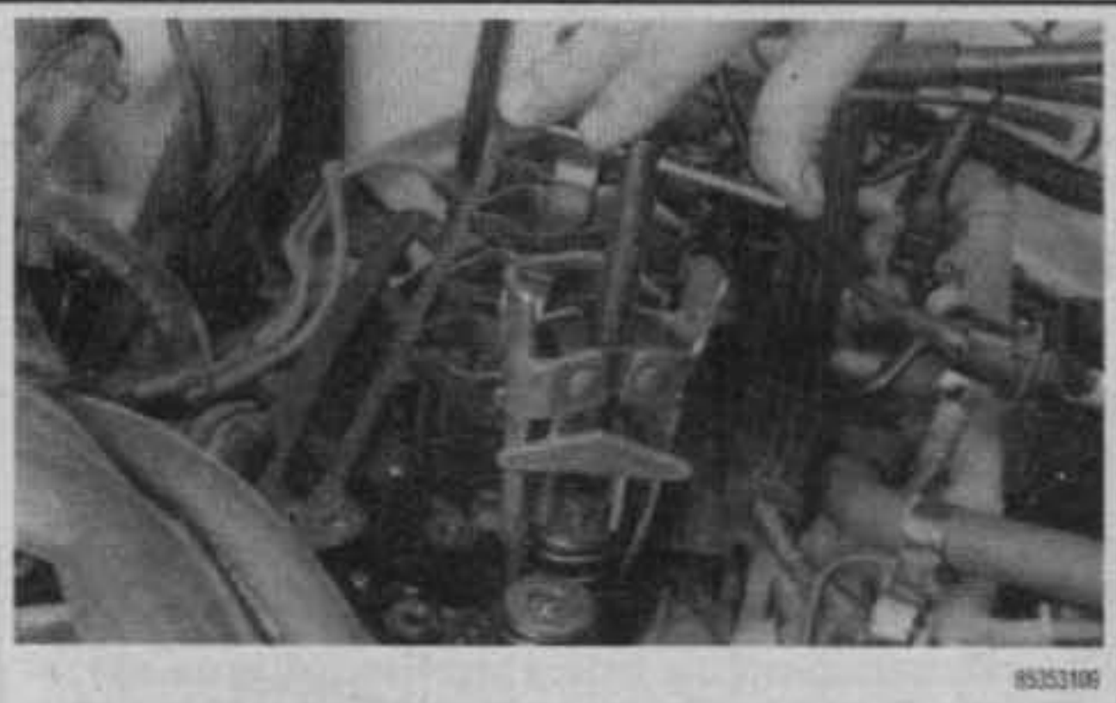

Fig. 109 Using a screw-type valve spring compressor tool

CLEANING AND INSPECTION

See Figures 110, 111, 112, 113 and 114

1. Clean the valves with a wire wheel, then inspect the valves for warping, cracks or wear. They may be refaced if not excessively worn or pitted.

2. Using a guide cleaner chucked into a drill, clean the valve guides. Check the valve stem and guide diameters with micrometers. The guides are not replaceable. If out of specification, they must be reamed and an insert pressed in, or they may be knurled to bring up interior metal, restoring their diameter.

➡Valves with oversized stems are normally available to compensate for wear.

3. Install each valve into its respective port (guide) of the cylinder head.
4. Mount a dial indicator so that its pointer is at 90° to the valve stem, as close to the valve guide as possible.
5. Move the valve off its seat, and measure the valve guide-to-stem clearance by rocking the stem back and forth to actuate the dial indicator.
6. Inspect the springs for obvious signs of wear. Check their installed height and tension using the values in the Valve Specifications Chart in this section.

➡Refacing of valves and other such cylinder head work is most easily done at a machine shop. The quality and time saved easily justifies the cost.

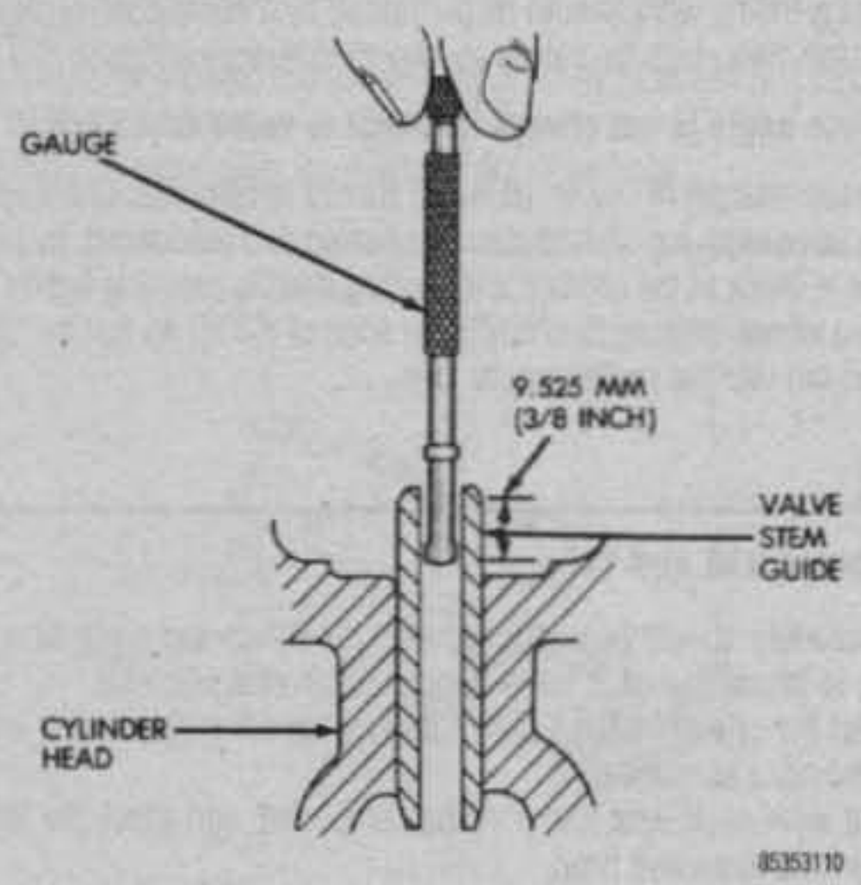

Fig. 110 Measurement of the valve guide bore diameter

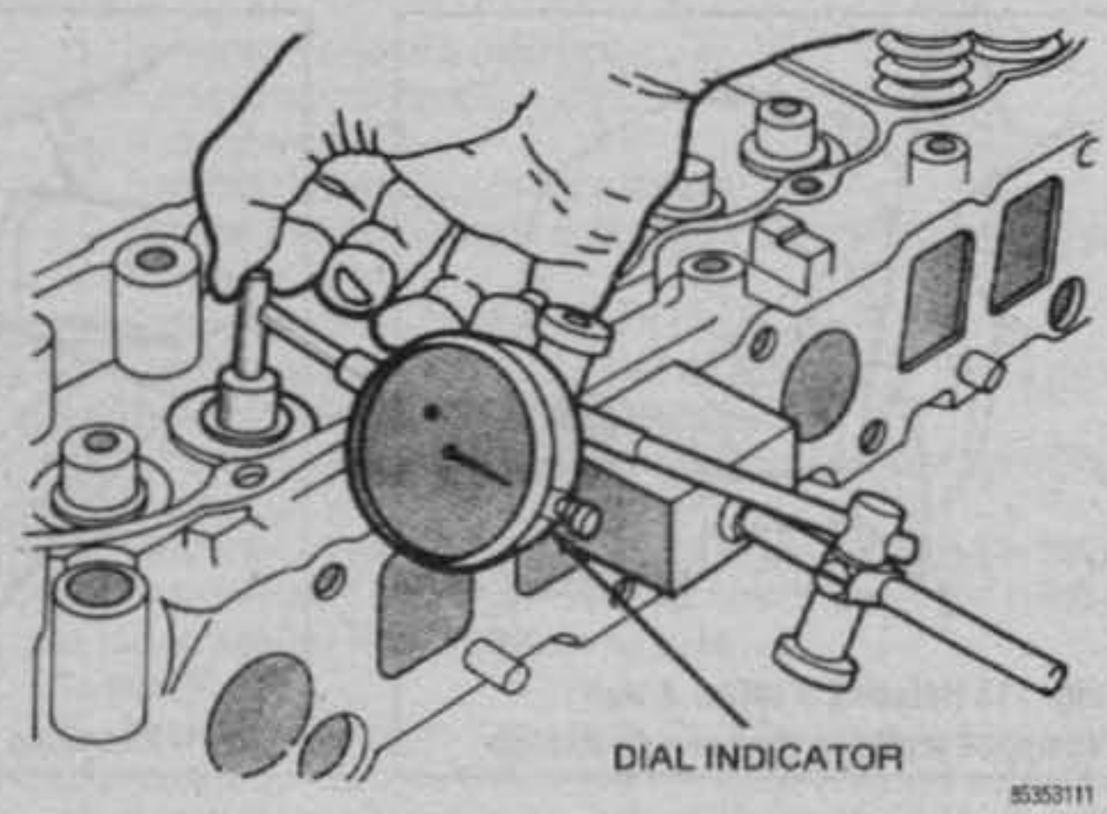

Fig. 111 Measurement of the lateral movement of the valve stem

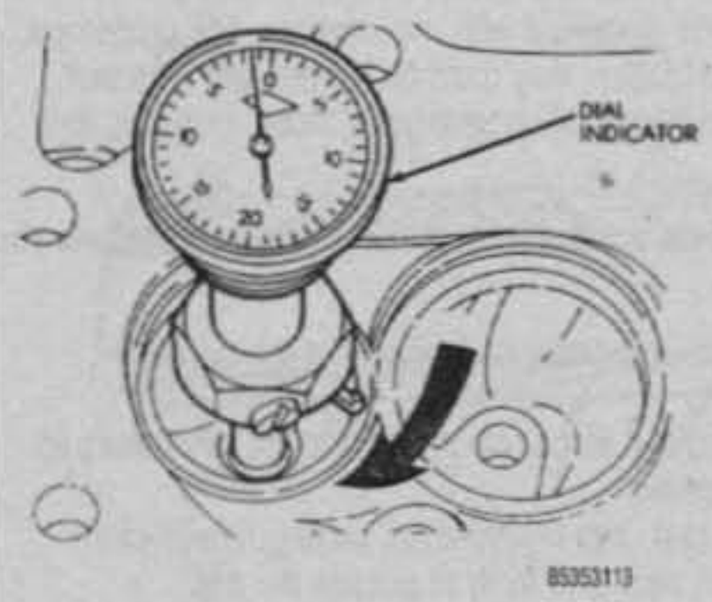

Fig. 112 Measurement of the valve seat run-out

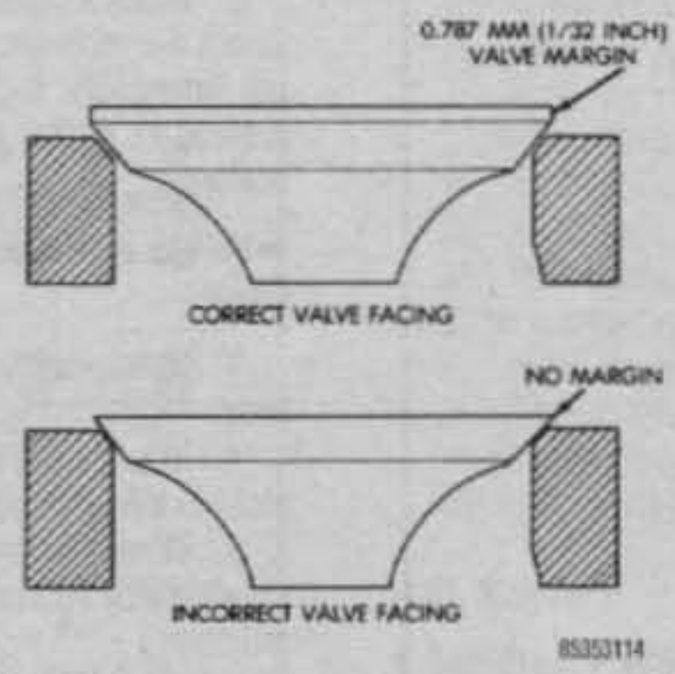

Fig. 113 Valve facing margin

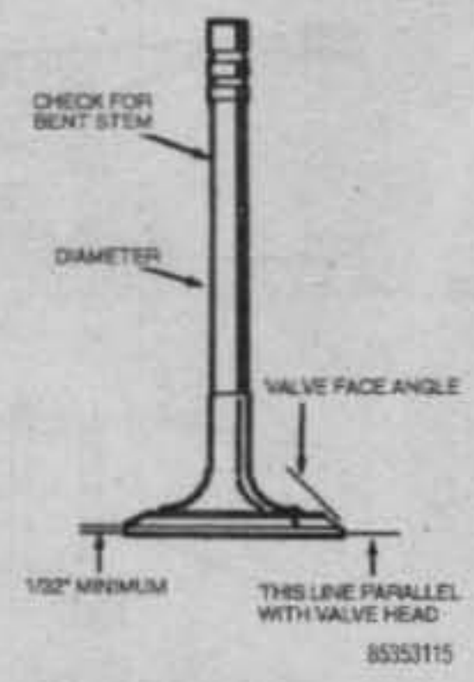

Fig. 114 Critical valve dimensions

REFACING

See Figure 115

All valve grinding work should be performed by a competent, professional machine shop. Resurface the valves according to specifications in this section.

➡Valve face angle is not always identical to valve seat angle.

A minimum margin of 1/32 in. (0.8mm) should remain after grinding the valve. The valve stem top should also be squared and resurfaced, by placing the stem in the V-block of the grinder; and turning it while pressing lightly against the grinding wheel. Be sure to chamfer the edge of the tip so that the squared edges don't dig into the rocker arm or cam.

LAPPING

See Figures 116 and 117

This procedure should be performed after the valves and seats have been machined, to insure that each valve mates to each seat precisely.

1. Invert the cylinder head, lightly lubricate the valve stems, and install the valves in the head as numbered.
2. Coat valve seats with fine grinding compound, and attach the lapping tool suction cup to a valve head.

➡Moisten the suction cup.

3. Rotate the tool between your palms, changing position and lifting the tool often to prevent grooving.
4. Lap the valve until a smooth, polished seat is evident.
5. Remove the valve and tool, and rinse away all traces of grinding compound.

VALVE SPRING TESTING

See Figures 118, 119 and 120

Place the spring on a flat surface next to a square. Measure the height of the spring, and rotate it against the edge of the square to measure distortion. If spring height varies by more than 1/16 in. (1.6mm), or if distortion exceeds 1/16 in. (1.6mm), replace the spring.

In addition these evaluations, check spring pressure at both the installed and compressed heights using a valve spring tester.

➡Compressed height is the installed height minus the valve lift measurement.

Spring pressure should be within 1 lb. of all other springs in either position.

INSTALLATION

See Figure 121

1. Coat all parts with clean engine oil. Install all parts in their respective locations. The spring is installed with the closely wound coils toward the valve head. Always use new valve seals.
2. Use a spring compressor to install the keepers and slowly release the compressor after the keepers are in place.
3. Release the spring compressor. Tap the end of the stem with a wood mallet to insure that the keepers are securely in place.
4. Install all other parts in reverse order of removal.

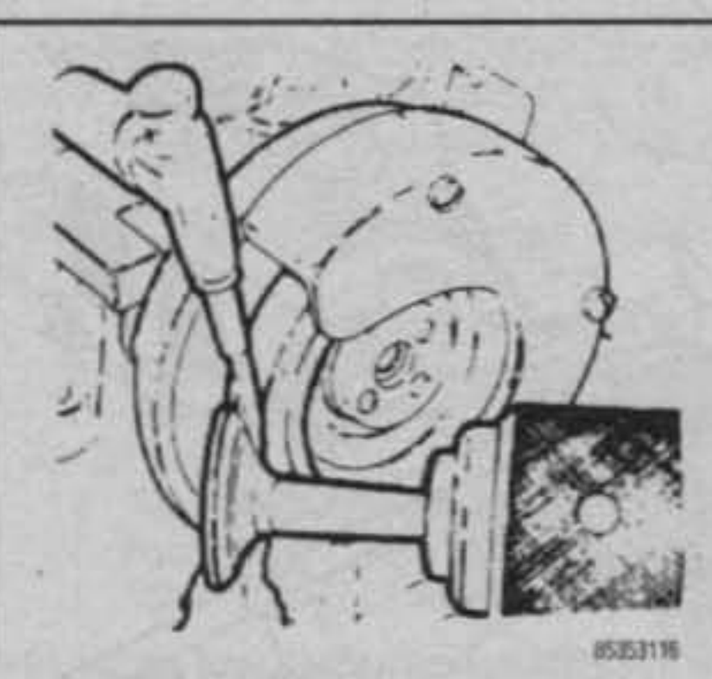

Fig. 115 Refacing a valve. A well equipped machine shop can do this job

Fig. 116 Lapping the valves by hand

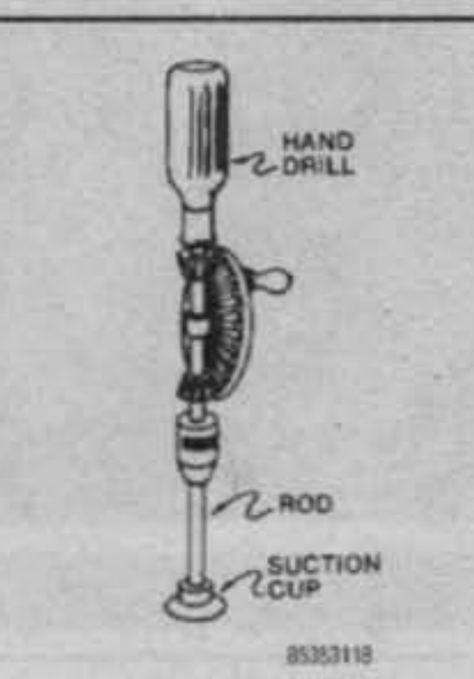

Fig. 117 Homemade valve lapping tool

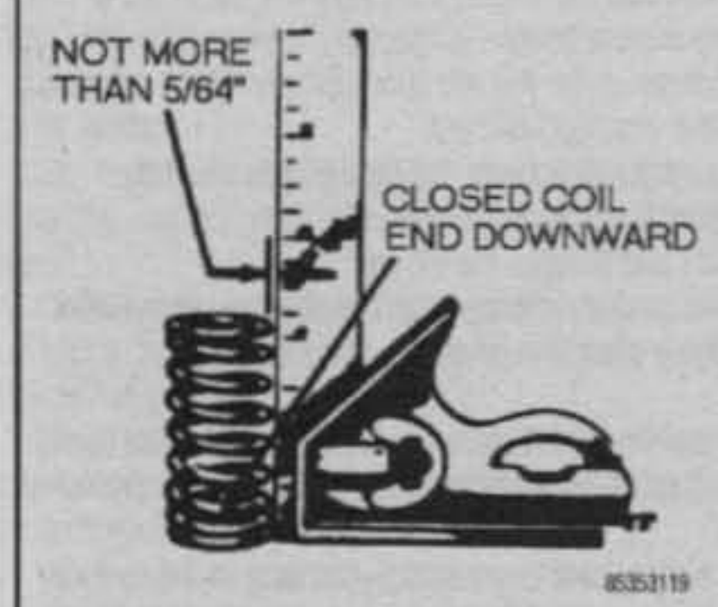

Fig. 118 Check the valve spring free length and squareness

Fig. 119 Testing the valve spring

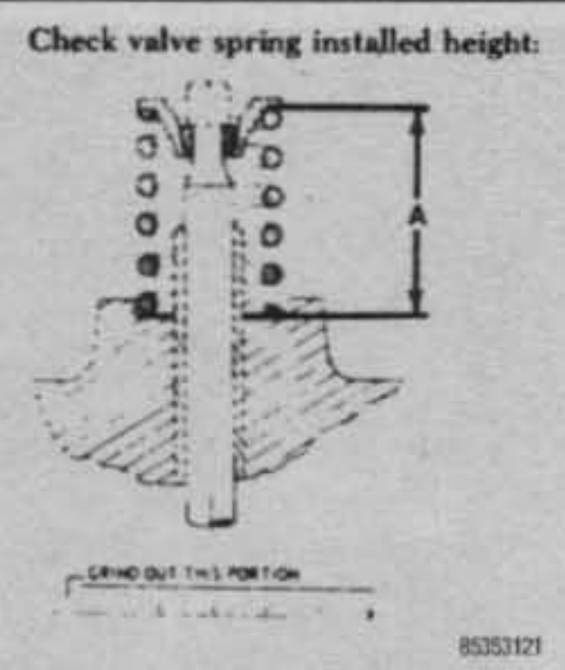

Fig. 120 Valve spring installed height (A)

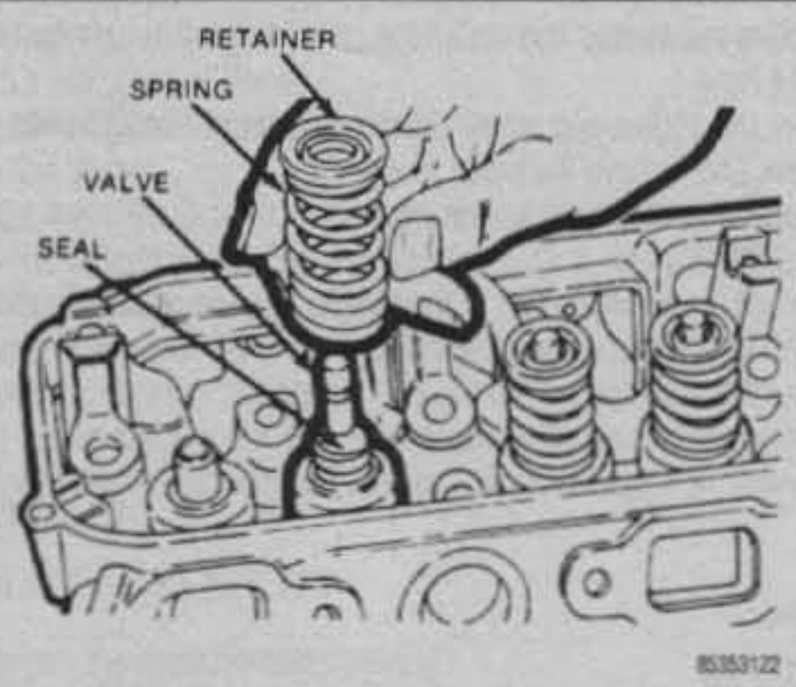

Fig. 121 Install the valve stem seals

Valve Seats

REFACING

The seats may be refaced with a special grinding tool, to the dimensions shown in the Valve Specifications Chart.

Oil Pan

REMOVAL & INSTALLATION

2.5L Engine

1987–89 VEHICLES

See Figure 122

1. Disconnect the battery ground.
2. Raise and support the vehicle on jackstands.
3. Drain the oil.

CAUTION

The EPA warns that prolonged contact with used engine oil may cause a number of skin disorders, including cancer! You should make every effort to minimize your exposure to used engine oil. Protective gloves should be worn when changing the oil. Wash your hands and any other exposed skin areas as soon as possible after exposure to used engine oil. Soap and water, or waterless hand cleaner should be used.

4. Disconnect the exhaust pipe at the manifold.
5. Remove the starter.
6. Remove the bellhousing access plate.
7. Unbolt and remove the oil pan.

To install:

8. Clean the gasket surfaces thoroughly.
9. Install a replacement seal at the bottom of the timing case cover and at the rear bearing cap.
10. Using new gaskets coated with sealer, install the pan and torque the bolts to 10 ft. lbs. (14 Nm).
11. Install all other parts in reverse order of removal.

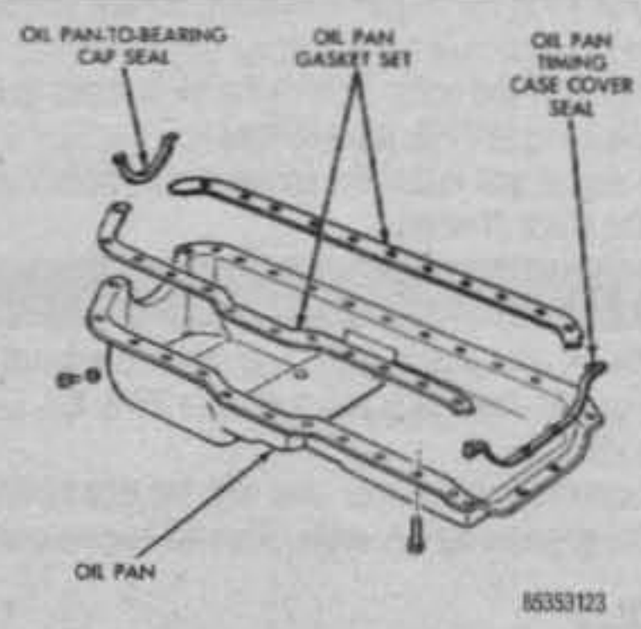

Fig. 122 Oil pan gaskets and seals—1987–91 2.5L, 1987–90 4.2L and 1991 4.0L engines

1990–91 VEHICLES

See Figures 122 and 123

1. Disconnect the negative battery cable.
2. Raise and support the vehicle safely.
3. Drain the engine oil.
4. Disconnect the exhaust pipe at the manifold.
5. Disconnect the exhaust hanger at the catalytic converter and lower the pipe.
6. Remove the starter.
7. Remove the bellhousing access cover.
8. Position a jackstand directly under the vibration damper. Place a piece of wood between the jack and the vibration damper.
9. Remove the engine mount bolts/nuts. Using the jack, raise the engine until there is enough room to remove the oil pan.
10. Remove the oil pan bolts and remove the oil pan by sliding it to the rear.
11. Clean all sealant and old gasket material from the oil pan and cylinder block mating surfaces. Thoroughly clean the oil pan.

To install:

12. Install a replacement front seal on the timing case cover and apply a generous amount of suitable liquid gasket material to the recesses in the end tabs.
13. Cement the replacement oil pan side gaskets into position on the cylinder block. Apply a generous amount of suitable liquid gasket material to the end tabs of the gaskets.

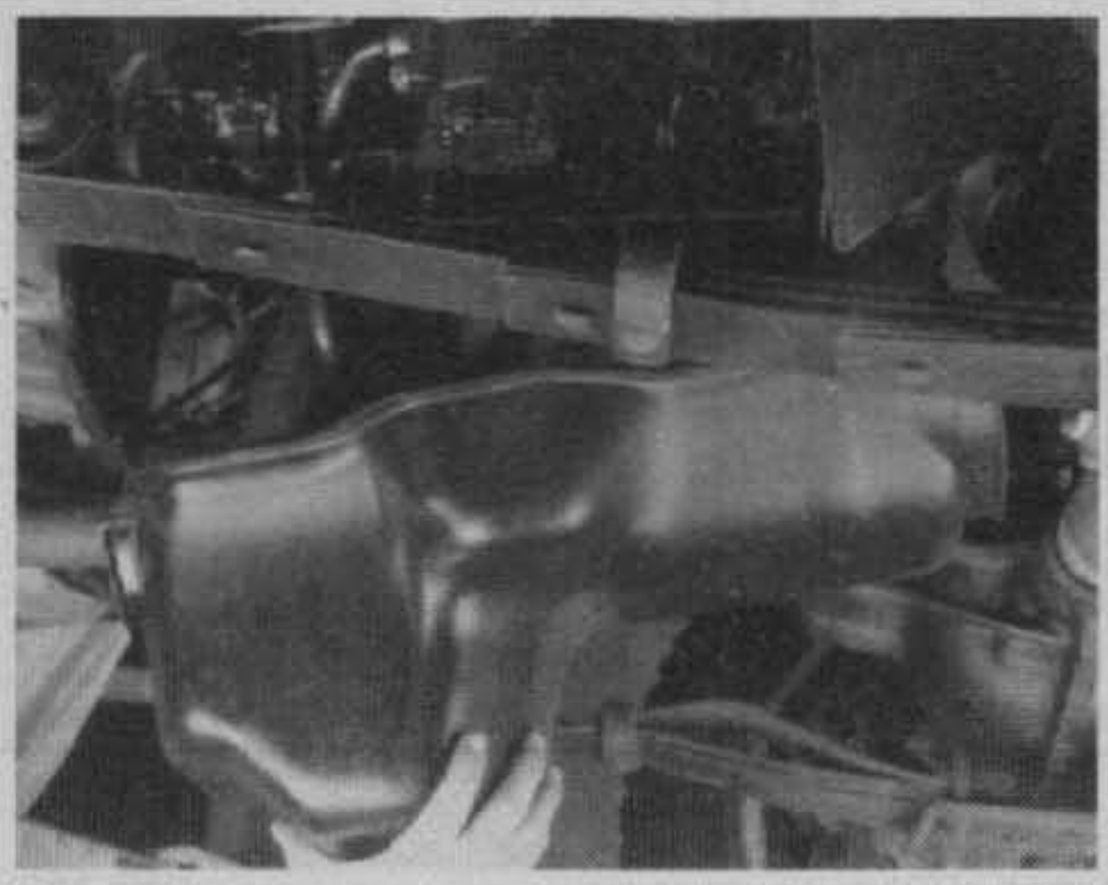

Fig. 123 Oil pan removal

14. Coat the inside curved surface of the replacement oil pan rear seal with soap. Apply a generous amount of suitable liquid gasket material to the gasket contacting surface of the seal end tabs.
15. Install the seal in the recess of the rear main bearing cap, making sure it is fully seated.
16. Apply engine oil to the oil pan contacting surface of the front and rear oil pan seals.
17. Install the oil pan and bolts. Tighten the ¼ in. bolts to 80 inch lbs. (9 Nm) and the 5/16 in. bolts to 11 ft. lbs. (15 Nm).
18. Lower the engine and install the engine mount bolts/nuts. Lower the jack and remove the piece of wood.
19. Install the bellhousing access cover.
20. Install the starter.
21. Connect the exhaust pipe to the hanger and the exhaust manifold.
22. Install the oil pan drain plug and tighten to 25 ft. lbs. (34 Nm).
23. Lower the vehicle.
24. Fill the crankcase to the proper level with the recommended oil.
25. Connect the negative battery cable. Start the engine and check for leaks.

1992–95 VEHICLES

See Figures 124, 125 and 126

1. Disconnect the negative battery cable.
2. Raise and support the vehicle safely.
3. Drain the engine oil.
4. Disconnect the exhaust pipe at the manifold.
5. Disconnect the exhaust hanger at the catalytic converter and lower the pipe.
6. Remove the starter.
7. Remove the bellhousing access cover.
8. Position a jackstand directly under the vibration damper. Place a piece of wood between the jack and the vibration damper.
9. Remove the engine mount through bolts. Using the jack, raise the engine until there is enough room to remove the oil pan.
10. Remove the oil pan bolts and remove the oil pan.
11. Clean all sealant and old gasket material from the oil pan and cylinder block mating surfaces. Thoroughly clean the oil pan.

To install:

12. Fabricate 4 alignment dowels from 1½ in. x ¼ in. bolts. Cut the heads off the bolts and cut a slot into the top of the dowel to allow installation/removal with a screwdriver.
13. Install 2 dowels in the timing case cover and the other 2 in the cylinder block. Slide the one-piece gasket over the dowels and onto the block and timing case cover.
14. Position the oil pan over the dowels and onto the gasket. Install the ¼ in. pan bolts and tighten to 10 ft. lbs. (14 Nm). Install the 5/16 in. pan bolts and tighten to 13 ft. lbs. (18 Nm).
15. Remove the dowels and install the remaining ¼ in. pan bolts. Tighten to 10 ft. lbs. (14 Nm).
16. Lower the engine and install the engine mount through bolts and nuts. Lower the jack and remove the piece of wood.
17. Install the bellhousing access cover.
18. Install the starter.
19. Connect the exhaust pipe to the hanger and the exhaust manifold.
20. Install the oil pan drain plug and tighten to 25 ft. lbs. (34 Nm).
21. Lower the vehicle.
22. Fill the crankcase to the proper level with the recommended oil.
23. Connect the negative battery cable. Start the engine and check for leaks.

4.0L Engine

1991 VEHICLES

See Figure 122

1. Disconnect the negative battery cable.
2. Raise and support the vehicle safely.
3. Drain the engine oil.
4. Disconnect the exhaust pipe at the manifold.
5. Disconnect the exhaust hanger at the catalytic converter and lower the pipe.
6. Remove the starter.
7. Remove the bellhousing access cover.
8. Position a jackstand directly under the vibration damper. Place a piece of wood between the jack and the vibration damper.
9. Remove the engine mount bolts/nuts. Using the jack, raise the engine until there is enough room to remove the oil pan.
10. Remove the oil pan bolts and remove the oil pan by sliding it to the rear.

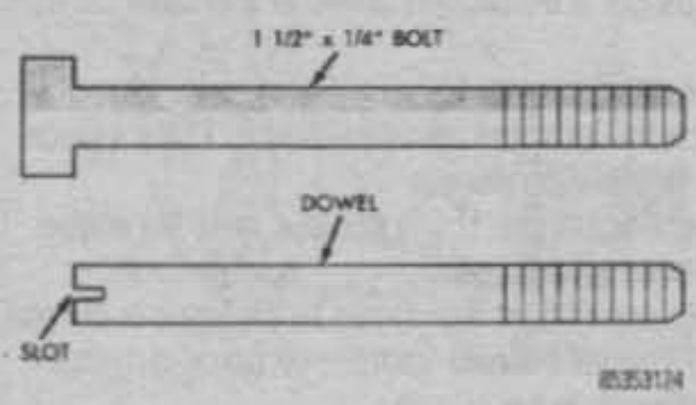

Fig. 124 Fabricate alignment dowels from 1/4 in. bolts—1992–95 2.5L and 4.0L engines

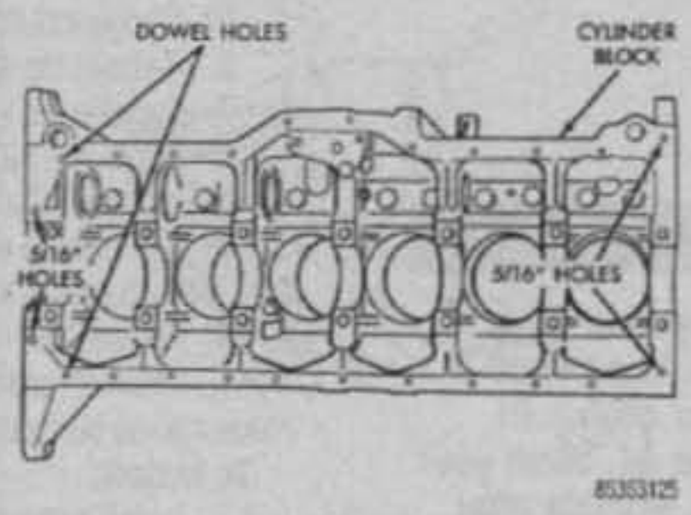

Fig. 125 Position of dowels in cylinder block—1992–95 2.5L and 4.0L engines

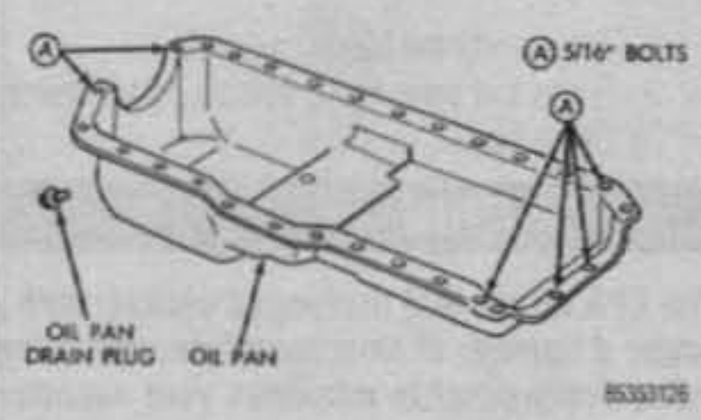

Fig. 126 Install 5/16 in. oil pan bolts at position "A"—1992–95 2.5L and 4.0L engines

11. Clean all sealant and old gasket material from the oil pan and cylinder block mating surfaces. Thoroughly clean the oil pan.

To install:

12. Install a replacement front seal on the timing case cover and apply a generous amount of suitable liquid gasket material to the recesses in the end tabs.
13. Cement the replacement oil pan side gaskets into position on the cylinder block. Apply a generous amount of suitable liquid gasket material to the end tabs of the gaskets.
14. Coat the inside curved surface of the replacement oil pan rear seal with soap. Apply a generous amount of suitable liquid gasket material to the gasket contacting surface of the seal end tabs.
15. Install the seal in the recess of the rear main bearing cap, making sure it is fully seated.
16. Apply engine oil to the oil pan contacting surface of the front and rear oil pan seals.
17. Install the oil pan and bolts. Tighten the ¼ in. bolts to 80 inch lbs. (9 Nm) and the 5/16 in. bolts to 11 ft. lbs. (15 Nm).
18. Lower the engine and install the engine mount bolts/nuts. Lower the jack and remove the piece of wood.
19. Install the bellhousing access cover.
20. Install the starter.
21. Connect the exhaust pipe to the hanger and the exhaust manifold.
22. Install the oil pan drain plug and tighten to 25 ft. lbs. (34 Nm).
23. Lower the vehicle.
24. Fill the crankcase to the proper level with the recommended oil.
25. Connect the negative battery cable. Start the engine and check for leaks.

1992–95 VEHICLES

See Figures 124, 125 and 126

1. Disconnect the negative battery cable.
2. Raise and support the vehicle safely.
3. Drain the engine oil.
4. Disconnect the exhaust pipe at the manifold.
5. Disconnect the exhaust hanger at the catalytic converter and lower the pipe.
6. Remove the starter.
7. Remove the bellhousing access cover.
8. Position a jackstand directly under the vibration damper. Place a piece of wood between the jack and the vibration damper.
9. Remove the engine mount through bolts. Using the jack, raise the engine until there is enough room to remove the oil pan.
10. Remove the oil pan bolts and remove the oil pan.
11. Clean all sealant and old gasket material from the oil pan and cylinder block mating surfaces. Thoroughly clean the oil pan.

To install:

12. Fabricate 4 alignment dowels from 1½ in. x ¼ in. bolts. Cut the heads off the bolts and cut a slot into the top of the dowel to allow installation/removal with a screwdriver.
13. Install 2 dowels in the timing case cover and the other 2 in the cylinder block. Slide the one-piece gasket over the dowels and onto the block and timing case cover.
14. Position the oil pan over the dowels and onto the gasket. Install the ¼ in. pan bolts and tighten to 10 ft. lbs. (14 Nm). Install the 5/16 in. pan bolts and tighten to 13 ft. lbs. (18 Nm).
15. Remove the dowels and install the remaining ¼ in. pan bolts. Tighten to 10 ft. lbs. (14 Nm).
16. Lower the engine and install the engine mount through bolts and nuts. Lower the jack and remove the piece of wood.
17. Install the bellhousing access cover.
18. Install the starter.
19. Connect the exhaust pipe to the hanger and the exhaust manifold.
20. Install the oil pan drain plug and tighten to 25 ft. lbs. (34 Nm).
21. Lower the vehicle.
22. Fill the crankcase to the proper level with the recommended oil.
23. Connect the negative battery cable. Start the engine and check for leaks.

4.2L Engine

See Figure 122

1. Raise the vehicle and drain the engine oil.

CAUTION

The EPA warns that prolonged contact with used engine oil may cause a number of skin disorders, including cancer! You should make every effort to minimize your exposure to used engine oil. Protective gloves should be worn when changing the oil. Wash your hands and any other exposed skin areas as soon as possible after exposure to used engine oil. Soap and water, or waterless hand cleaner should be used.

2. Remove the starter motor.
3. Place a jack under the transmission bell housing. Disconnect the engine right support cushion bracket from the block and raise the engine to allow sufficient clearance for oil pan removal.
4. Remove the oil pan attaching bolts and remove the oil pan.

To install:

5. Remove the oil pan front and rear neoprene oil seals and the side gaskets. Thoroughly clean the gasket surfaces of the oil pan and the engine block. Remove all of the sludge and dirt from the oil pan sump.
6. Apply a generous amount of RTV silicone to the end tabs of a new oil pan front seal and install the seal to the timing case cover.
7. Cement new oil pan side gaskets into position on the engine block and apply a generous amount of RTV silicone to the side gasket contacting surface of the seal end tabs.
8. Install the seal in the recess of the rear main bearing cap, making sure that it is fully seated.
9. Coat the oil pan contacting surface of the front and rear oil pan seals with engine oil.
10. Install the oil pan and assemble the engine mount in the reverse order of removal.

Oil Pump

See Figure 127

REMOVAL & INSTALLATION

All Engines

1. Drain the oil and remove the oil pan as outlined earlier in this section.

CAUTION

The EPA warns that prolonged contact with used engine oil may cause a number of skin disorders, including cancer! You should make every effort to minimize your exposure to used engine oil. Protective gloves should be worn when changing the oil. Wash your hands and any other exposed skin areas as soon as possible after

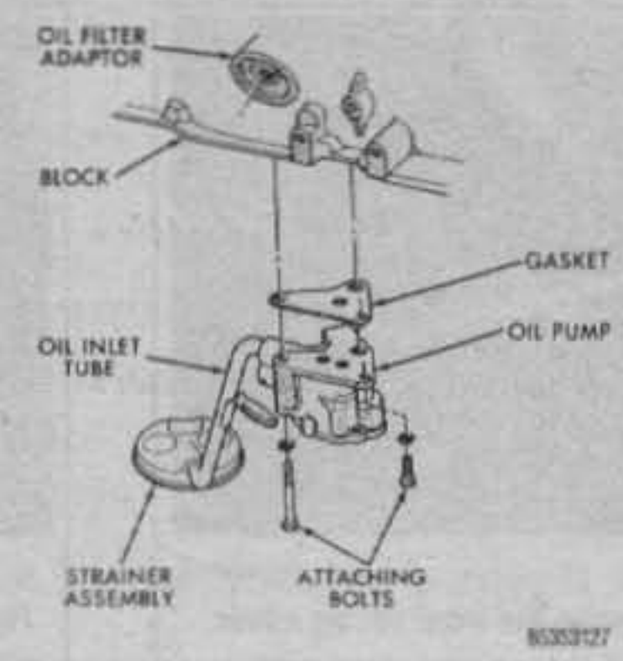

Fig. 127 Oil pump—1992–95 2.5L and 4.0L engines

exposure to used engine oil. Soap and water, or waterless hand cleaner should be used.

2. Remove the oil pump retaining screws and separate the oil pump and gasket from the engine block.

➡Do not disturb the position of the oil pick-up tube and screen assembly in the pump body. If the tube is moved within the pump body, a new assembly must be installed to assure an airtight seal.

3. Installation is the reverse of removal. Torque the short bolts to 10 ft. lbs. (14 Nm) and the long bolts to 17 ft. lbs. (23 Nm).

Crankshaft Pulley (Vibration Damper)

REMOVAL & INSTALLATION

▶ See Figures 128, 129 and 130

1. Remove the fan shroud, as required. If necessary, drain the cooling system and remove the radiator. Remove drive belts from the pulley.

CAUTION

When draining the coolant, keep in mind that cats and dogs are attracted by ethylene glycol antifreeze, and are quite likely to drink any that is left in an uncovered container or in puddles on the ground. This will prove fatal in sufficient quantity. Always drain the coolant into a sealable container. Coolant should be reused unless it is contaminated or several years old.

2. On those engines with a separate pulley, remove the retaining bolts and separate the pulley from the vibration damper.
3. Remove the vibration damper/pulley retaining bolt from the crankshaft end.
4. Using a puller, remove the damper/pulley from the crankshaft.
5. Upon installation, align the key slot of the pulley hub to the crankshaft key. Complete assembly in the reverse order of removal. Torque the retaining bolts to 80 ft. lbs. (108 Nm).

Timing Gear Cover and Seal

REMOVAL & INSTALLATION

2.5L Engine

▶ See Figures 131 thru 138

➡Special tools are needed for this job.

1. Remove the drive belts and fan shroud.
2. Unscrew the vibration damper bolts and washer.
3. Using a puller, remove the vibration damper.
4. Remove the fan assembly. If the fan is equipped with a fan clutch, DO NOT LAY IT DOWN! If you lay it down, the fluid will leak out of the clutch and irreversibly damage the fan.
5. Disconnect the battery ground.
6. Remove the air conditioning compressor/alternator bracket assembly and lay it out of the way. DO NOT DISCONNECT THE REFRIGERANT LINES!
7. Unbolt the cover from the block and oil pan. Remove the cover and front seal.
8. Cut off the oil pan side gasket end tabs and oil pan front seal tabs.
9. Clean all gasket mating surfaces thoroughly.
10. Remove the seal from the cover.

To install:

11. Apply sealer to both sides of the new case cover gasket and position it on the block.
12. Cut the end tabs off the new oil pan side gaskets corresponding to those

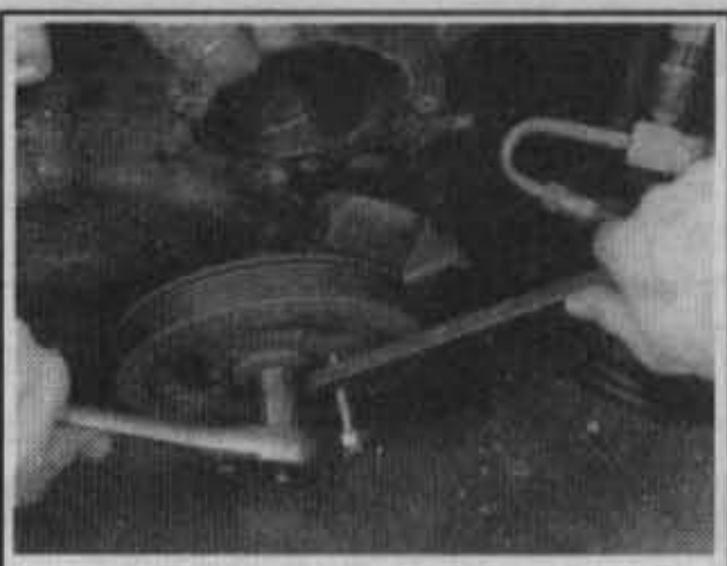

85353128

Fig. 128 Use a tool to hold the vibration damper while removing the center retaining bolt (water pump removed for clarity)

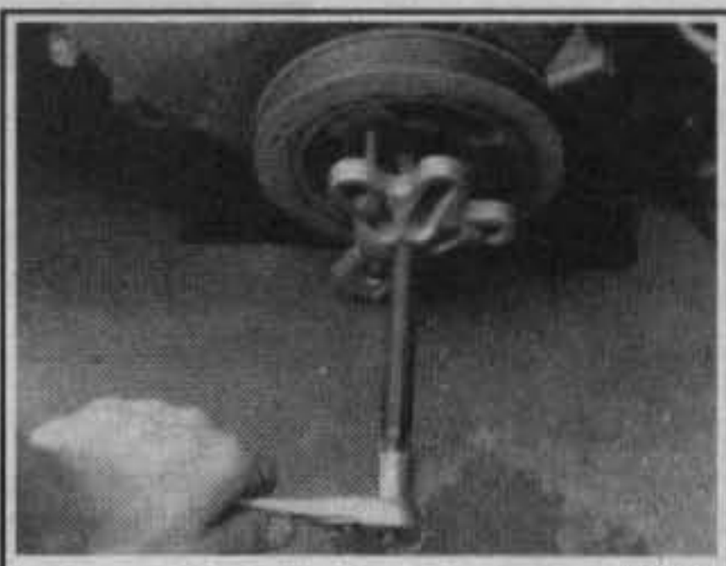

85353129

Fig. 129 After removing the center retaining bolt, install a puller to remove the vibration damper

85353130

Fig. 130 Removing the vibration damper using the puller

85353131

Fig. 131 Removing the front timing cover retaining bolts (water pump removed for clarity)

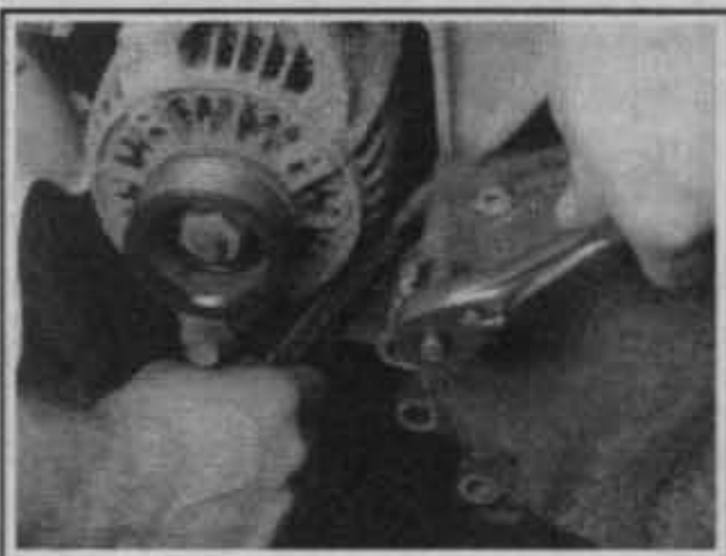

85353132

Fig. 132 Use a back-up wrench behind the alternator bracket to remove the front timing cover retaining bolt at this location

85353133

Fig. 133 Removing the front timing cover from the vehicle

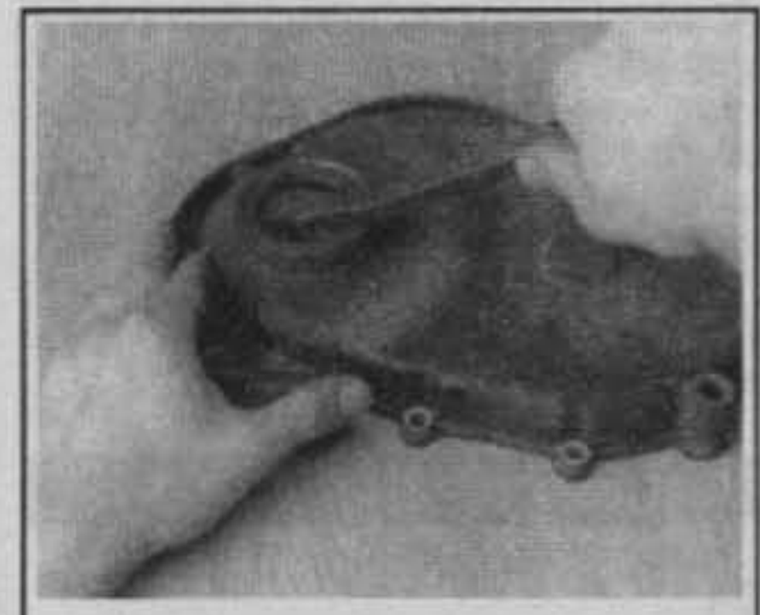

Fig. 134 Carefully pry the seal from the cover without damaging the cover edge

Fig. 135 Seat the seal in the cover using an installation tool

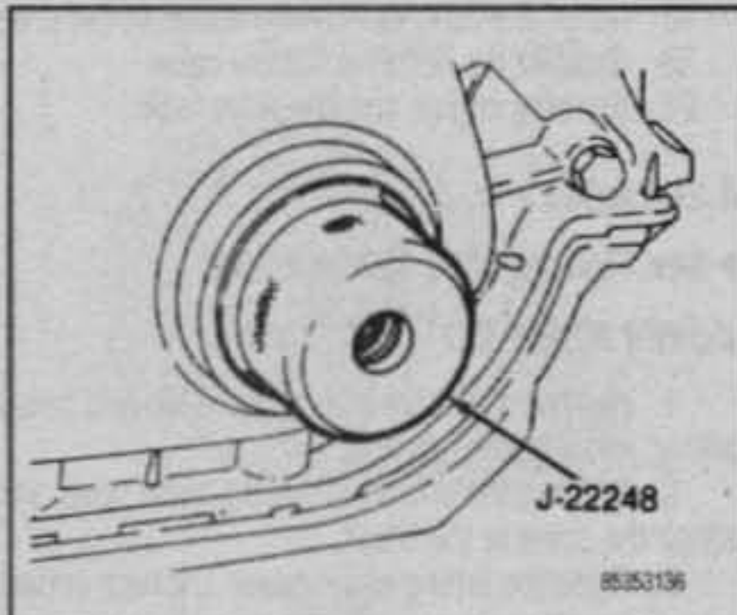

Fig. 136 Timing cover centering tool installation

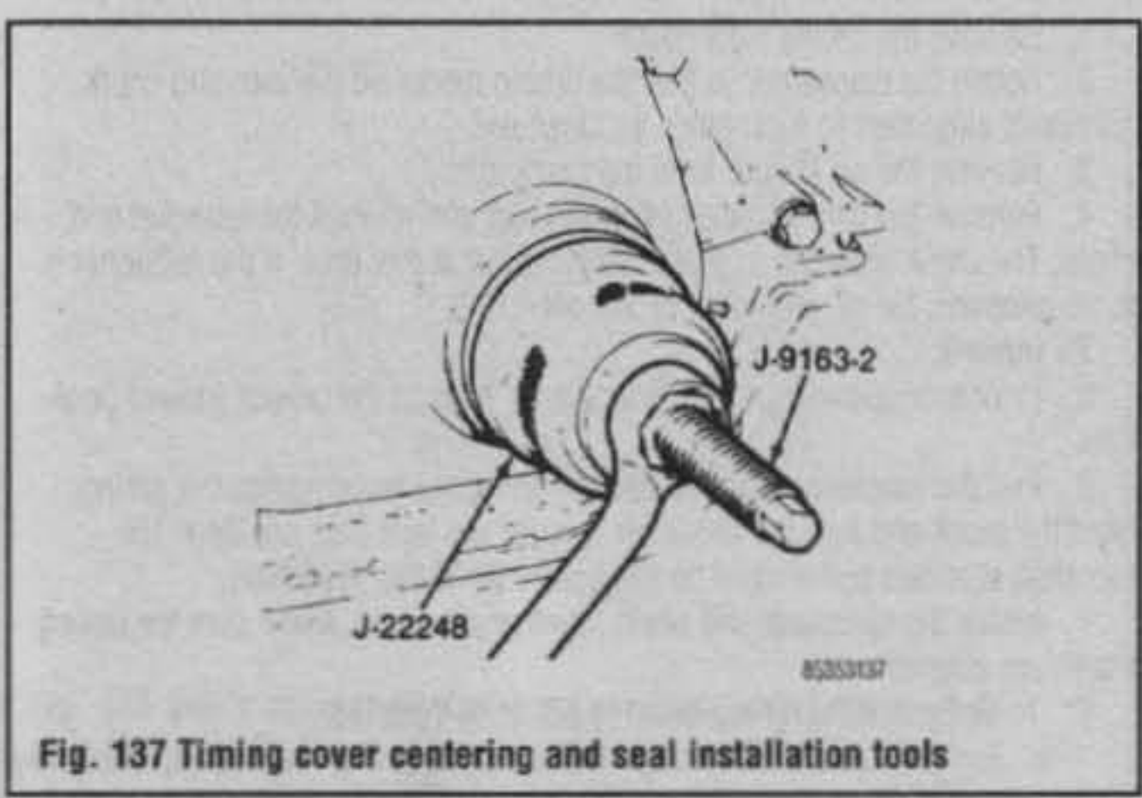

Fig. 137 Timing cover centering and seal installation tools

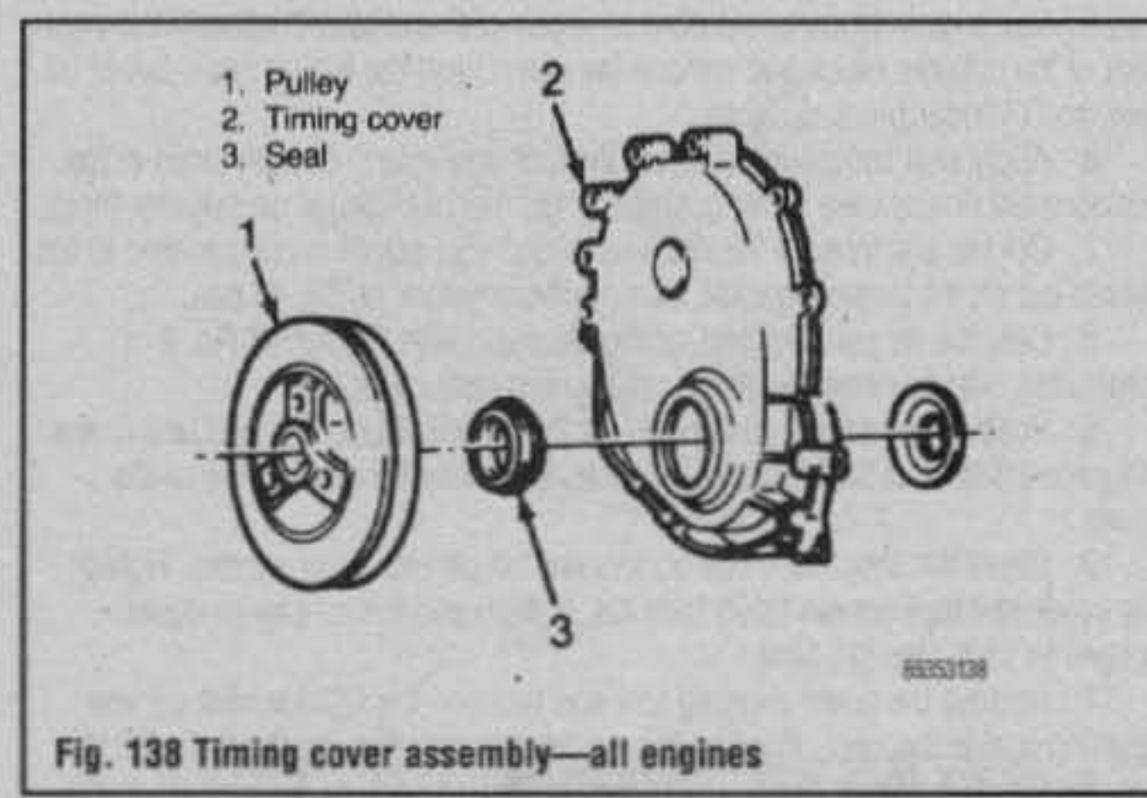

Fig. 138 Timing cover assembly—all engines

cut off the original gasket and attach the tabs to the oil pan with gasket cement.

13. Coat the front cover seal end tab recesses generously with RTV sealant and position the side seal in the cover.

14. Apply engine oil to the seal-to-pan contact surface.

15. Position the cover on the block.

16. Insert alignment tool J-22248 into the crankshaft opening in the cover.

17. Install the cover bolts. Tighten the cover-to-block bolts to 5 ft. lbs. (7 Nm) and the cover-to-pan bolts to 11 ft. lbs. (15 Nm).

18. Remove the alignment tool and position the new front seal on the tool with the seal lip facing outward. Apply a light film of sealer to the outside diameter of the seal. Lightly coat the crankshaft with clean engine oil.

19. Position the tool and seal over the end of the crankshaft and insert the Draw Screw J-9163-2 into the installation tool.

20. Tighten the nut until the tool just contacts the cover.

21. Remove the tools and apply a light film of engine oil on the vibration damper hub contact surface of the seal.

22. With the key inserted in the keyway in the crankshaft, install the vibration damper, washer and bolt. Lubricate the bolt and tighten it to 108 ft. lbs. (146 Nm).

23. Install all other parts in reverse order of removal.

4.0L Engine

▸ See Figure 138

1. Disconnect the negative battery cable.

2. Remove the drive belt(s), fan and fan shroud. If equipped, remove the accessory drive belt pulley.

3. Remove the vibration damper retaining bolt and washer. Remove the vibration damper using a suitable puller.

4. Remove the accessory drive brackets attached to the timing cover.

5. Remove the A/C compressor, if equipped, and alternator bracket from the cylinder head and move to one side.

6. Remove the oil pan-to-timing case cover bolts and the cover-to-cylinder block bolts.

7. Remove the timing case cover front seal and gasket from the engine.

8. Cut off the oil pan side gasket end tabs and oil pan front seal tabs flush with the front face of the cylinder block. Remove the gasket tabs.

9. Clean the timing case cover, oil pan and cylinder block gasket surfaces.

10. Remove the crankshaft seal oil seal from the cover by prying it out with a suitable tool.

To install:

11. Install a new seal in the timing cover using a suitable seal installation tool.

12. Apply sealer to both sides of the replacement cover gasket and position the gasket on the cylinder block. Cut the end tabs off the replacement oil pan gasket corresponding to those cut off the original gasket. Attach the end tabs to the oil pan with sealer.

13. Coat the front cover seal end tab recesses generously with sealer and position the seal on the timing cover.

14. Apply engine oil to the seal-oil pan contact surface, then position the cover on the cylinder block.

15. Insert timing case cover alignment tool J22248 or equivalent, in the crankshaft opening. Install the cover-to-cylinder block bolts and tighten them to 62 inch lbs. (7 Nm). Install and tighten the oil pan-to-cover bolts to 11 ft. lbs. (13 Nm).

16. Remove the cover alignment tool and position a replacement oil seal on the tool with the seal lip facing outward. Apply a light coat of sealer to the seal and a light coat of oil to the crankshaft. Install the seal on the timing cover.

17. Apply a light film of oil to the vibration damper hub seal contact surface. Install the vibration damper using a suitable installation tool.

➡Do not hammer the damper into place as damage may result to the damper or engine.

18. Install and tighten the crankshaft vibration damper bolt to 80 ft. lbs. (108 Nm).

19. If equipped, install the crankshaft pulley and tighten the bolts to 20 ft. lbs. (27 Nm).

20. Install the accessory brackets.

21. Install the fan and fan shroud.

22. Install the drive belt(s) and adjust to the proper tension.
23. Connect the negative battery cable.
24. Start the engine and check for leaks.

4.2L Engine

See Figures 136, 137 and 138

COVER REMOVED

1. Remove the drive belts, engine fan and hub assembly, the accessory pulley, and vibration damper.
2. Remove the oil pan to timing chain cover screws and the screws that attach the cover to the block.
3. Raise the timing chain cover just high enough to detach the retaining nibs of the oil pan neoprene seal from the bottom side of the cover. This must be done to prevent pulling the seal end tabs away from the tongues of the oil pan gaskets which would cause a leak.
4. Remove the timing chain cover and gasket from the engine.

To install:

5. Use a razor blade to cut off the oil pan seal end tabs flush with the front face of the cylinder block and remove the seal. Clean the timing chain cover, oil pan, and cylinder block surfaces.
6. Apply seal compound (Perfect Seal, or equivalent) to both sides of the replacement timing case cover gasket and position the gasket on cylinder block.
7. Cut the end tabs off the replacement oil pan gasket corresponding to the pieces cut off the original gasket. Cement these pieces on the oil pan.
8. Coat the oil pan seal end tabs generously with Permatex® No. 2 or equivalent, and position the seal on the timing case cover.
9. Position the timing case cover on the engine. Place Timing Case Cover Alignment Tool and Seal Installer J-22248 in the crankshaft opening of the cover.
10. Install the cover-to-block screws and oil pan-to-cover screws. Tighten the cover-to-block screws to 60 inch lbs. (7 Nm) and the oil pan-to-cover screws to 11 ft. lbs. (15 Nm).
11. Remove the cover aligning tool and position the replacement oil seal aligning tool in the case. Position the replacement oil seal on the tool with the seal lip facing outward. Apply a light film of Perfect Seal, or equivalent, on the outside diameter of the seal.
12. Insert the draw screw from Tool J-9163 into the seal installing tool. Tighten the nut against the tool until the tool contacts the cover.
13. Remove the tools and apply a light film of engine oil to the seal lip.
14. Install the vibration damper and tighten the retaining screw to 80 ft. lbs. (108 Nm).
15. Install the damper pulley. Tighten the capscrews to 20 ft. lbs. (27 Nm).
16. Install the engine fan and hub assembly.
17. Install the drive belt(s).

COVER INSTALLED

1. Remove the drive belts.
2. Remove the vibration damper pulley.
3. Remove the vibration damper.
4. Remove the oil seal with Tool J-9256.
5. Position the replacement oil seal on the Timing Case Cover Alignment Tool and Seal Installer J-22248 with the seal lip facing outward. Apply a light film of Perfect Seal, or equivalent, to the outside diameter of the seal.
6. Insert the draw screw from Tool J-9163 into the seal installing tool. Tighten the nut against the tool until the tool contacts the cover.
7. Remove the tools. Apply a light film of engine oil to the seal lip.
8. Install the vibration damper and tighten the retaining bolt to 80 ft. lbs. (108 Nm).
9. Install the damper pulley. Tighten the capscrews to 20 ft. lbs. (27 Nm).
10. Install the drive belt(s).

Timing Chain and Tensioner

REMOVAL & INSTALLATION

2.5L Engine

See Figures 139 thru 143

1. Remove the timing case cover.
2. Rotate the crankshaft so that the timing marks on the cam and crank sprockets align next to each other, as illustrated.
3. Remove the oil slinger from the crankshaft.
4. Remove the cam sprocket retaining bolt and remove the sprocket and chain. The crank sprocket may also be removed at this time. If the tensioner is to be removed, the oil pan must be removed first.

To install:

5. Prior to installation, turn the tensioner lever to the unlock (down) position.
6. Pull the tensioner block toward the tensioner to compress the spring. Hold the block and turn the tensioner lever to the lock (up) position. The camshaft sprocket bolt should be torqued to 80 ft. lbs. (108 Nm).
7. Install the sprockets and chain together, as a unit. Make sure the timing marks are aligned.
8. To verify that the timing chain is correctly installed:
   a. Turn the crankshaft to place the camshaft timing mark at approximately the one o'clock position.
   b. At this point, there should be a tooth on the crankshaft sprocket meshed with the chain at the three o'clock position.
   c. Count the number of timing chain pins between the two timing marks on the right side (your right, facing the engine). There should be 20 pins.
9. Install the oil pan, slinger and timing cover.

4.0L Engine

See Figures 144 and 145

1. Disconnect the negative battery cable.
2. Remove the drive belt(s), fan and fan shroud.
3. If equipped, remove the crankshaft pulley. Remove the vibration damper retaining bolt and washer.
4. Using a puller, remove the vibration damper.
5. Remove the timing case cover.

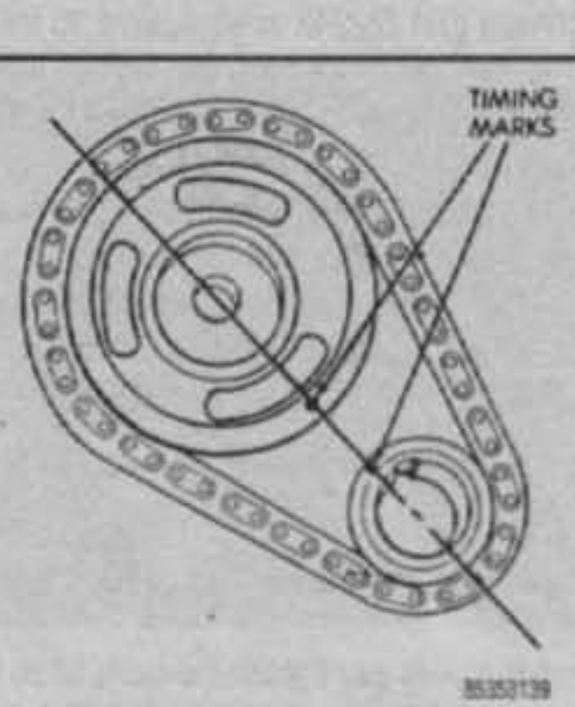

Fig. 139 Crankshaft/camshaft sprocket alignment—2.5L engine

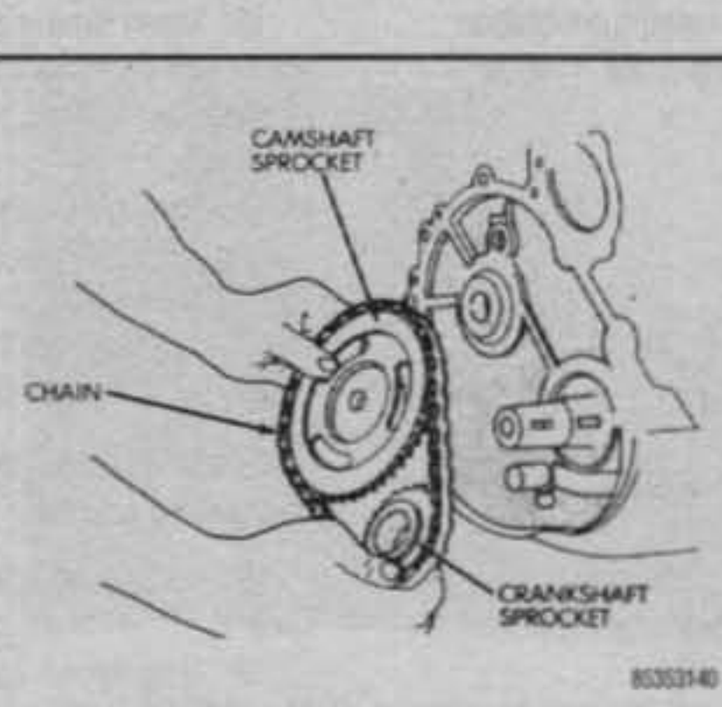

Fig. 140 Sprockets and chain removal—2.5L engine

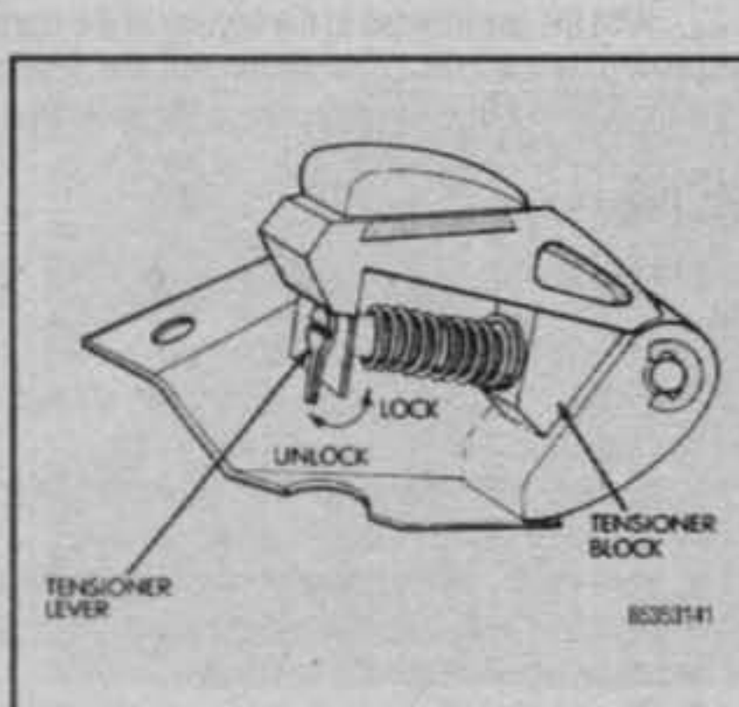

Fig. 141 Loading timing chain tensioner—2.5L engine

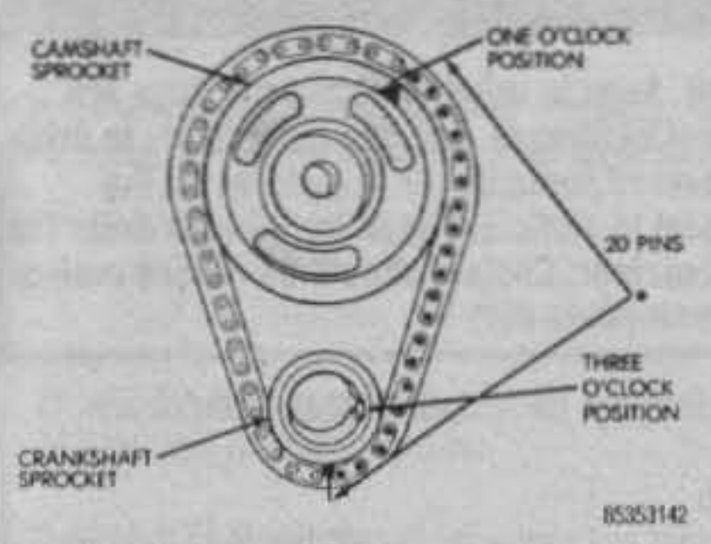

Fig. 142 Verify positioning of the crankshaft and camshaft sprockets—2.5L engine

Fig. 143 Removing the crankshaft oil slinger—2.5L engine shown

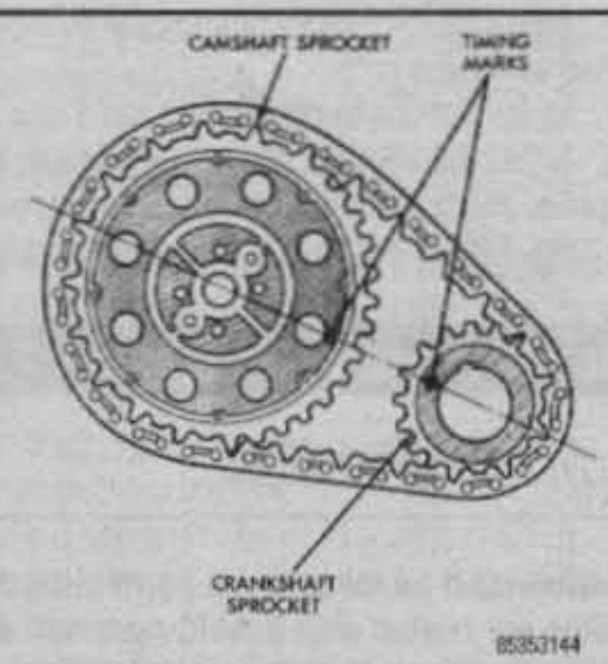

Fig. 144 Crankshaft/camshaft sprocket alignment—4.0L engine

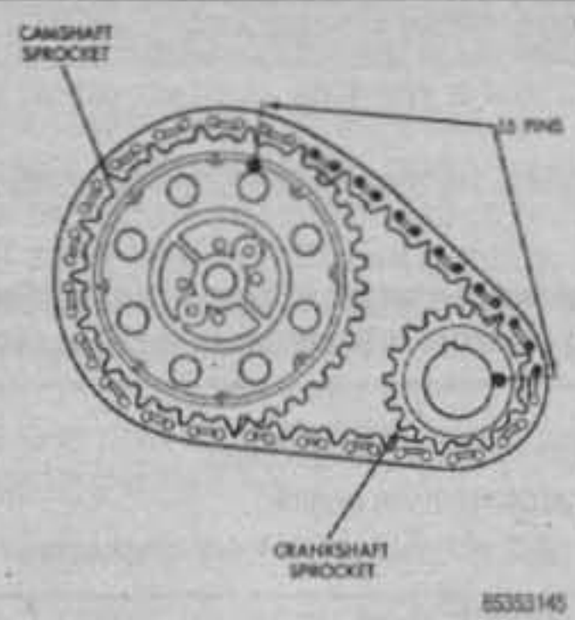

Fig. 145 Verify crankshaft/camshaft sprocket installation—4.0L engine

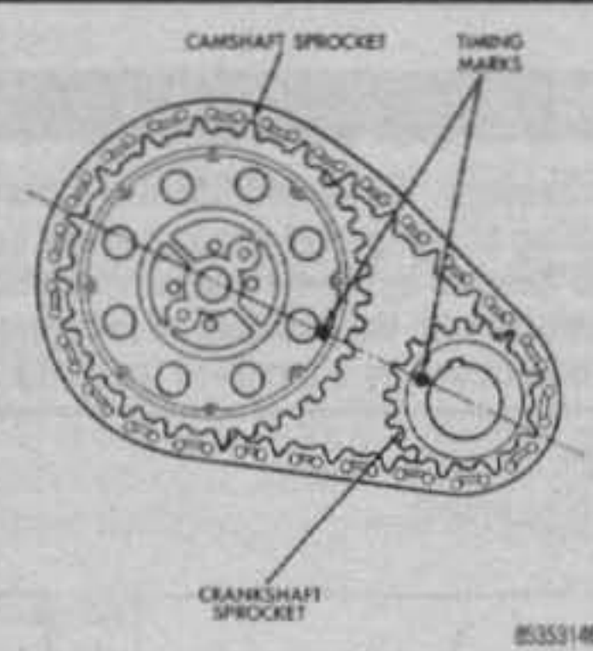

Fig. 146 Crankshaft/camshaft sprocket alignment—4.2L engine

6. Rotate the crankshaft until the **0** timing mark on the crankshaft sprocket is closest to, and on a center line with, the timing mark on the camshaft sprocket.

7. Remove the oil slinger from the crankshaft.

8. Unfasten the camshaft retaining bolt, then remove the sprockets and chain as an assembly. If the timing chain tensioner is to be replaced, the oil pan must be removed.

To install:

9. Turn the timing chain tensioner lever to the unlock (down) position. Pull the tensioner block toward the tensioner lever to compress the spring. Hold the block and turn the tensioner lever to the lock (up) position.

10. Install the sprockets and timing chain. Ensure the timing marks on the sprockets are properly aligned.

11. Install the camshaft sprocket retaining bolt and washer and tighten to 80 ft. lbs. (108 Nm).

12. To verify correct alignment, turn the crankshaft to position the camshaft sprocket timing mark at the 1 o'clock position. This positions the crankshaft sprocket timing mark where the adjacent tooth meshes with the chain at the 3 o'clock position. Count the number of chain pins between the timing marks of both sprockets; there must be 15 pins.

13. Install the oil slinger, timing case cover and all other removed components in reverse order.

4.2L Engine

▸ See Figures 146 and 147

1. Remove the drive belts, engine fan and hub assembly, accessory pulley, vibration damper and timing chain cover.

2. Remove the oil seal from the timing chain cover.

3. Remove the camshaft sprocket retaining bolt and washer.

4. Rotate the crankshaft until the timing mark on the crankshaft sprocket is closest to, and in a center line with, the timing pointer of the camshaft sprocket.

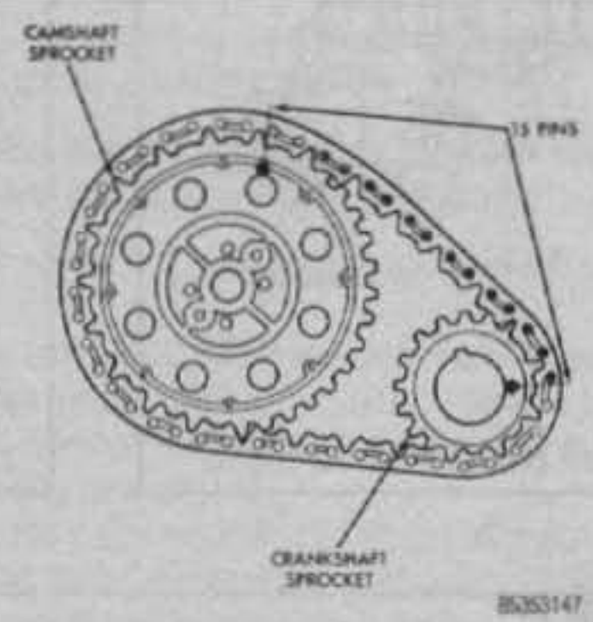

Fig. 147 Verify crankshaft/camshaft sprocket installation—4.2L engine

5. Remove the crankshaft sprocket, camshaft sprocket and timing chain as an assembly. Disassemble the chain and sprockets.

To install:

6. Assemble the timing chain, crankshaft sprocket and camshaft sprocket with the timing marks aligned.

7. With the key in the keyway on the crankshaft, install the assembly on the crankshaft and camshaft.

8. Install the camshaft sprocket retaining bolt and washer and tighten to 80 ft. lbs. (108 Nm).

9. To verify correct alignment, turn the crankshaft to position the camshaft sprocket timing mark at the 1 o'clock position. This positions the crankshaft sprocket timing mark where the adjacent tooth meshes with the chain at the 3 o'clock position. Count the number of chain pins between the timing marks of both sprockets; there must be 15 pins.

10. Install the oil slinger, timing case cover and all other components removed in reverse order.
11. Install the timing chain cover and a new oil seal.
12. Install the vibration damper and tighten to 80 ft. lbs. (108 Nm), accessory pulley and tighten to 20 ft. lbs. (27 Nm), engine fan and hub assembly and drive belts. Tighten the belts to the proper tension.

Camshaft and Bearings

REMOVAL & INSTALLATION

➡Caution must be taken when performing this procedure. Camshaft bearings are coated with babbitt material, which can be damaged by scraping the cam lobes across the bearing.

2.5L Engine

♦ See Figures 148, 149, 150 and 151

CAUTION

To perform this procedure, the air conditioning system must be discharged. Mishandling of refrigerant gas can cause severe personal injury! Unless you have an approved recovery/recycling station and are thoroughly familiar with the handling of refrigerant systems, have the system discharged by a qualified individual.

1. Disconnect the battery ground.
2. Drain the cooling system.

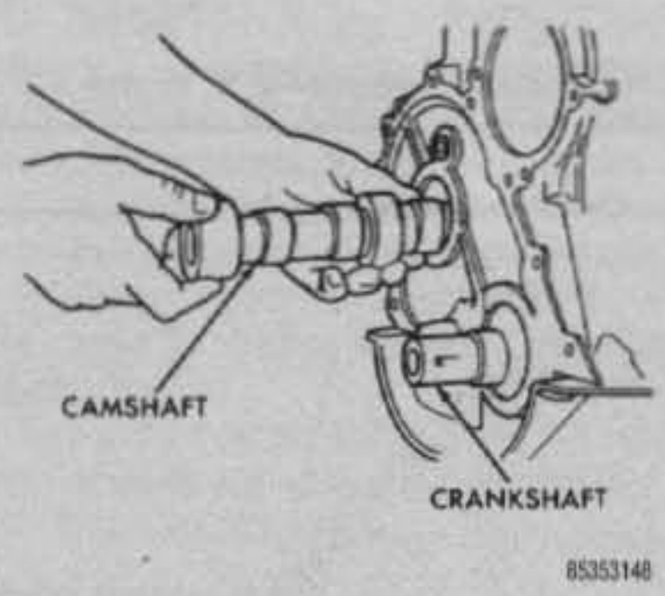

Fig. 148 Camshaft removal—2.5L engine

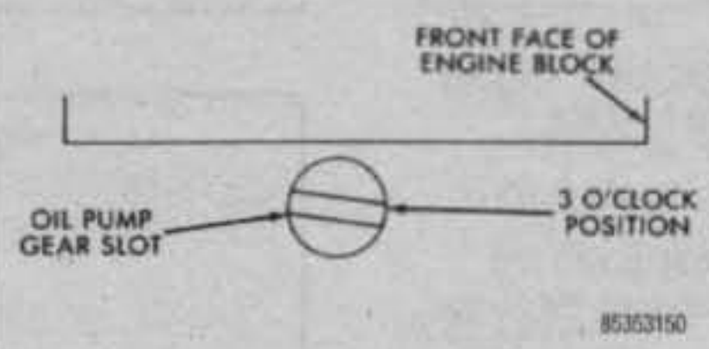

Fig. 149 Oil pump gear slot alignment—2.5L engine

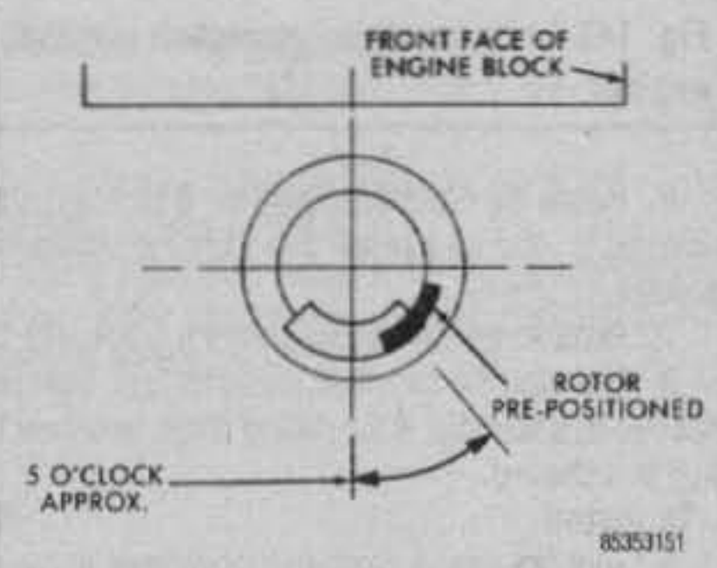

Fig. 150 Distributor rotor pre-positioning—2.5L engine

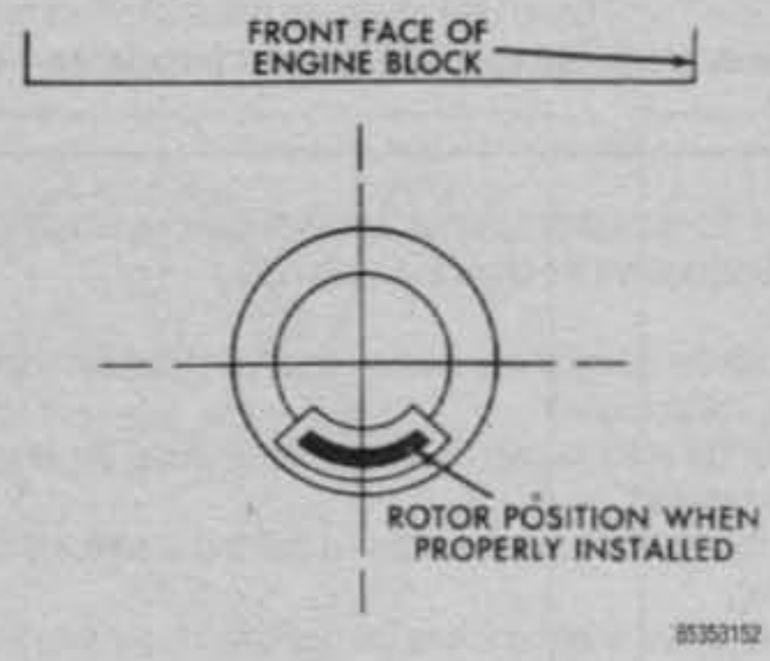

Fig. 151 Correct rotor positioning—2.5L engine

CAUTION

When draining the coolant, keep in mind that cats and dogs are attracted by ethylene glycol antifreeze, and are quite likely to drink any that is left in an uncovered container or in puddles on the ground. This will prove fatal in sufficient quantity. Always drain the coolant into a sealable container. Coolant should be reused unless it is contaminated or several years old.

3. Remove the radiator, discharge the refrigerant system (See Section 1) and remove the condenser.
4. Remove the fuel pump.
5. Matchmark the distributor and engine for installation. Note the rotor position by marking it on the distributor body. Unbolt and remove the distributor and wires.
6. Remove the rocker arm cover.
7. Remove the rocker arm assemblies.
8. Remove the pushrods.

➡Keep everything in order for installation.

9. Using tool J-21884 or equivalent, as shown, remove the hydraulic lifters.
10. Remove the pulley, vibration damper and timing case cover. Remove the crankshaft oil slinger.

➡If the camshaft sprocket appears to have been rubbing against the cover, check the oil pressure relief holes in the rear cam journal for debris.

11. Remove the timing chain and sprockets.
12. Slide the camshaft from the engine.
13. Inspect all parts for wear and damage. Lubricate all moving parts with engine oil supplement.

To install:

14. Slide the camshaft into the engine, carefully, to avoid damage to the bearing surfaces.
15. Install the timing chain and sprockets. Make sure that all camshaft timing marks align. Torque the camshaft sprocket bolt to 80 ft. lbs. (108 Nm).
16. Install the timing case cover.
17. Using tool J-21884 or equivalent, install the hydraulic lifters.
18. Install the pushrods.
19. Install the rocker arm assemblies.
20. Install the rocker arm cover.
21. Install the distributor and wires. When installing the distributor, make sure that all matchmarks align. It may be necessary to rotate the oil pump drive tang with a long-bladed screwdriver to facilitate installation of the distributor.

Position the engine at the number 1 cylinder TDC location. Rotate the gear slot on the oil pump shaft to a point slightly past the 3 o'clock position. Install

the distributor with the rotor at the 5 o'clock position. When fully engaged, the rotor should be at the 6 o'clock position.

➡If the distributor is not installed correctly, or removed later, the complete installation procedure must be done again.

22. Install the fuel pump.
23. Install the radiator.
24. Install the condenser and evacuate and charge the refrigerant system. (See Section 1).
25. Fill the cooling system.
26. Connect the battery ground.

4.0L and 4.2L Engines

▸ See Figure 148

1. Drain the cooling system and remove the radiator. With air conditioning, remove the condenser and receiver assembly as a unit, without disconnecting any lines or discharging the system.

CAUTION

When draining the coolant, keep in mind that cats and dogs are attracted by ethylene glycol antifreeze, and are quite likely to drink any that is left in an uncovered container or in puddles on the ground. This will prove fatal in sufficient quantity. Always drain the coolant into a sealable container. Coolant should be reused unless it is contaminated or several years old.

2. Remove the valve cover and gasket, the rocker assemblies, pushrods, cylinder head and gasket and the lifters.

➡The valve train components must be replaced in their original locations.

3. Remove the drive belts, cooling fan, fan hub assembly, vibration damper and the timing chain cover.
4. Remove the fuel pump and distributor assembly, including the spark plug wires.
5. Rotate the crankshaft until the timing mark of the crankshaft sprocket is adjacent to, and on a center line with, the timing mark of the camshaft sprocket.
6. Remove the crankshaft sprocket, camshaft sprocket, and the timing chain as an assembly.
7. Remove the front bumper or grille as required and carefully slide out the camshaft.

To install:

8. Coat all parts with engine oil supplement.
9. Slide the camshaft into place.
10. Install the front bumper and/or grille.
11. Install the crankshaft sprocket, camshaft sprocket, and the timing chain as an assembly.
12. Rotate the crankshaft until the timing mark of the crankshaft sprocket is adjacent to, and on a center line with, the timing mark of the camshaft sprocket.
13. Install the fuel pump and distributor assembly, including the spark plug wires.
14. Install the drive belts.
15. Install the cooling fan and fan hub assembly.
16. Install the vibration damper.
17. Install the cylinder head and gasket and the lifters.
18. Install the rocker assemblies and pushrods.
19. Install the valve cover and gasket.
20. Install the the timing chain cover.
21. With air conditioning, install the condenser and receiver.

➡The valve train components must be replaced in their original locations.

22. Fill the cooling system and install the radiator.

INSPECTION

Camshaft Lobe Lift

Check the lift of each lobe in consecutive order and make a note of the reading.

1. Remove the fresh air inlet tube and the air cleaner. Remove the heater hose and crankcase ventilation hoses. Remove valve rocker arm cover(s).
2. Remove the rocker arm stud nut or fulcrum bolts, fulcrum seat and rocker arm.
3. Make sure the pushrod is in the valve tappet socket. Install a dial indicator so that the actuating point of the indicator is in the pushrod socket (or the indicator ball socket adaptor is on the end of the pushrod) and in the same plane as the push rod movement.
4. Install an auxiliary starter switch. Crank the engine with the ignition switch off. Turn the crankshaft over until the tappet is on the base circle of the camshaft lobe. At this position, the pushrod will be in its lowest position.
5. Zero the dial indicator. Continue to rotate the crankshaft slowly until the pushrod is in the fully raised position.
6. Compare the total lift recorded on the dial indicator with the specification shown on the Camshaft Specification chart.

To check the accuracy of the original indicator reading, continue to rotate the crankshaft until the indicator reads zero. If the left on any lobe is below specified wear limits listed, the camshaft and the valve tappet operating on the worn lobe(s) must be replaced.

7. Install the dial indicator and auxiliary starter switch.
8. Install the rocker arm, fulcrum seat and stud nut or fulcrum bolts. Check the valve clearance and adjust if necessary (refer to the procedure in this section).
9. Install the valve rocker arm cover(s) and the air cleaner.

Camshaft End-Play

Camshaft end-play is maintained by the load placed on the camshaft by the oil pump and distributor drive gear. The helical cut of the gear holds the camshaft sprocket thrust face against the cylinder block face.

BEARING REPLACEMENT

The camshaft rotates within the four steel-shelled, babbitt-lined bearings that are pressed into the cylinder block and then line reamed. The camshaft bearing bores and bearing diameters are not the same size. They are stepped down to 0.010 inch (0.254 mm) increments from the front bearing (largest) to the rear bearing (smallest). This permits easier removal and installation of the camshaft. The camshaft bearings are pressure lubricated.

➡It is not advisable to attempt to replace camshaft bearings unless special removal and installation tools are available.

1. Remove the engine following the procedures in this section and install it on a work stand.
2. Remove the camshaft, flywheel and crankshaft, following the appropriate procedures. Push the pistons to the top of the cylinder.
3. Remove the camshaft rear bearing bore plug. Take out the camshaft bearings with a bearing removal tool.
4. Select the proper size expanding collet and back-up nut, and assemble them on the mandrel. With the expanding collet collapsed, install the collet assembly in the camshaft bearing and tighten the back-up nut on the expanding mandrel until the collet fits the camshaft bearing.
5. Assemble the puller screw and extension (if necessary) and install on the expanding mandrel. Wrap a cloth around the threads of the puller screw to protect the front bearing or journal. Tighten the pulling nut against the thrust bearing and pulling plate to remove the camshaft bearing. Be sure to hold a wrench on the end of the puller screw to prevent it from turning.
6. To remove the front bearing, install the puller from the rear of the cylinder block.
7. Position the new bearings at the bearing bores, and press them in place. Be sure to center the pulling plate and puller screw to avoid damage to the bearing. Failure to use the correct expanding collet can cause severe bearing damage. Align the oil holes in the bearings with the oil holes in the cylinder block before pressing bearings into place.
8. Install the camshaft rear bearing bore plug.
9. Install the camshaft, crankshaft, flywheel and related parts, following the appropriate procedures.
10. Install the engine in the vehicle, following procedures described earlier in this section.

Pistons and Connecting Rods

REMOVAL

See Figures 152, 153 and 154

In most cases, this procedure is easier with the engine out of the vehicle.

1. Remove the head(s).
2. Remove the oil pan.
3. Rotate the engine to bring each piston, in turn, to the bottom of its stroke. With the piston bottomed, use a ridge reamer to remove the ridge at the top of the cylinder. DO NOT CUT TOO DEEPLY!
4. Matchmark the rods and caps. If the pistons are to be removed from the connecting rod, mark the cylinder number on the piston with a silver pencil or quick drying paint for proper cylinder identification and cap-to-rod location. Remove the connecting rod capnuts and lift off the rod caps, keeping them in order. Install a guide hose over the threads of the rod bolts. This is to prevent damage to the bearing journal and rod bolt threads.
5. Using a hammer handle, push the piston and rod assemblies up out of the block.

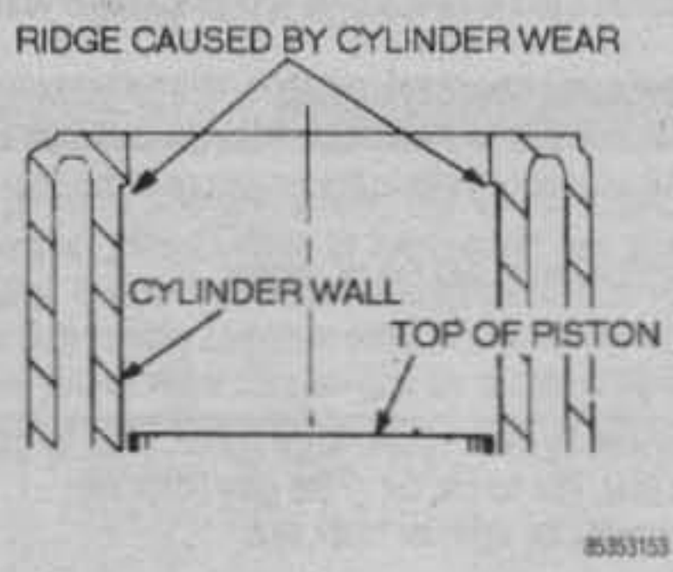

Fig. 152 Cylinder bore ridge

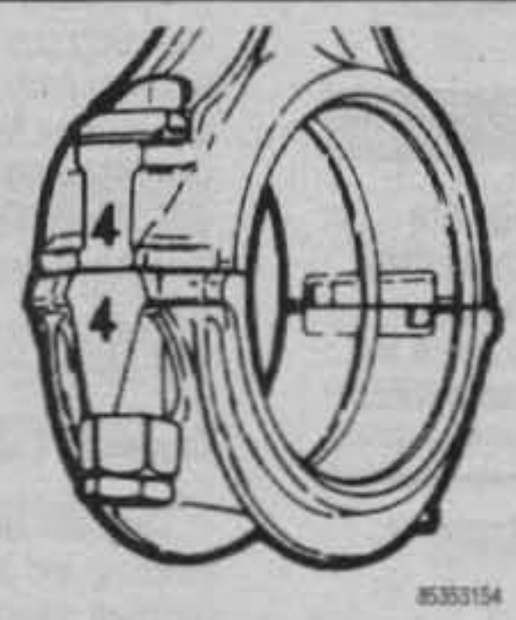

Fig. 153 Number each rod and cap accordingly

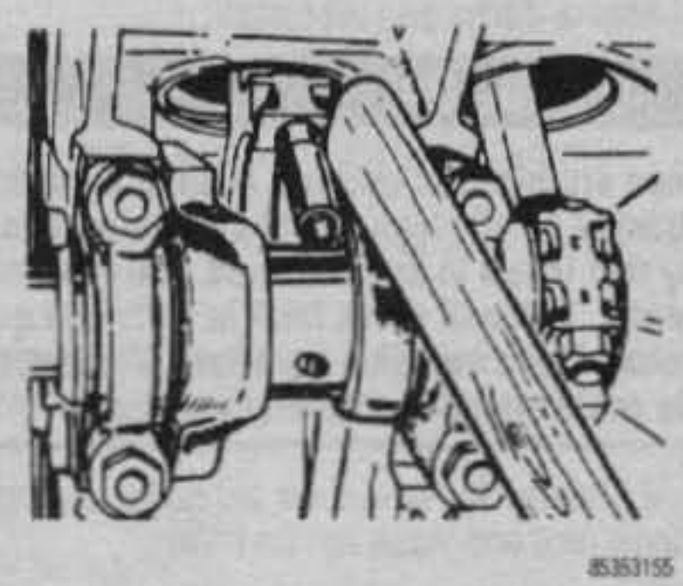

Fig. 154 Push the piston out with a hammer

PISTON PIN REMOVAL & INSTALLATION

See Figures 155, 156 and 157

Use care at all times when handling and servicing connecting rods and pistons. To prevent possible damage to these units, do not clamp the rod or piston in a vise since they may become distorted. Do not allow the pistons to strike against one another, against hard objects or bench surfaces, since distortion of the piston contour or nicks in the soft aluminum material may result.

1. Remove the piston rings using a suitable piston ring remover.
2. Remove the piston pin lockring, if used. Install the guide bushing of the piston pin removing and installing tool.
3. Install the piston and connecting rod assembly on a support, and place the assembly in an arbor press. Press the pin out of the connecting rod, using the appropriate piston pin tool.
4. Assembly is the reverse of disassembly. Use new lockrings where needed.

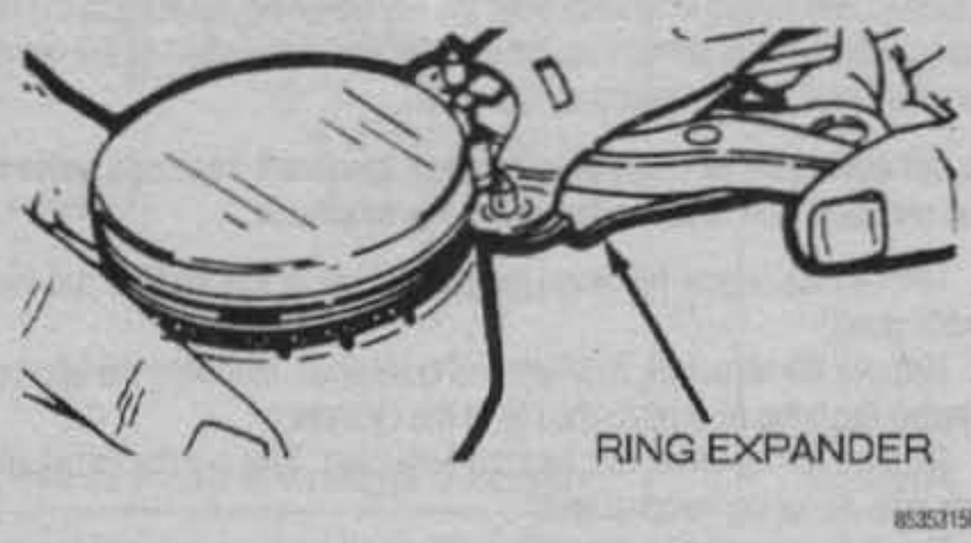

Fig. 155 Removing the piston rings

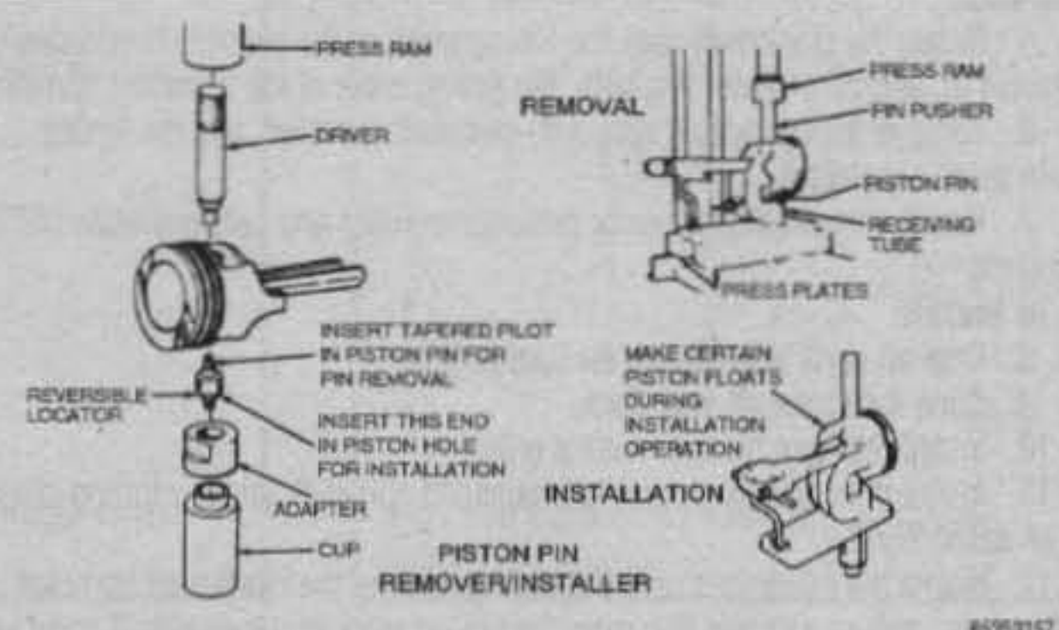

Fig. 156 Piston pins must be pressed in and out with an arbor press

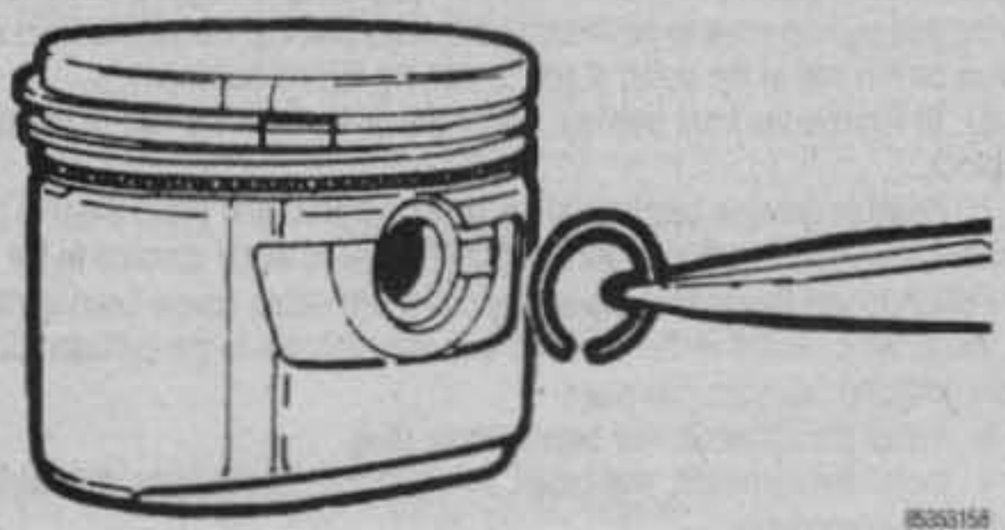

Fig. 157 Remove/install the piston pin lock rings (if so equipped)

INSPECTION

Cylinder Block

See Figures 158 and 159

Check the cylinder walls for evidence of rust, which would indicate a cracked block. Check the block face for distortion with a straightedge. Maximum distor-

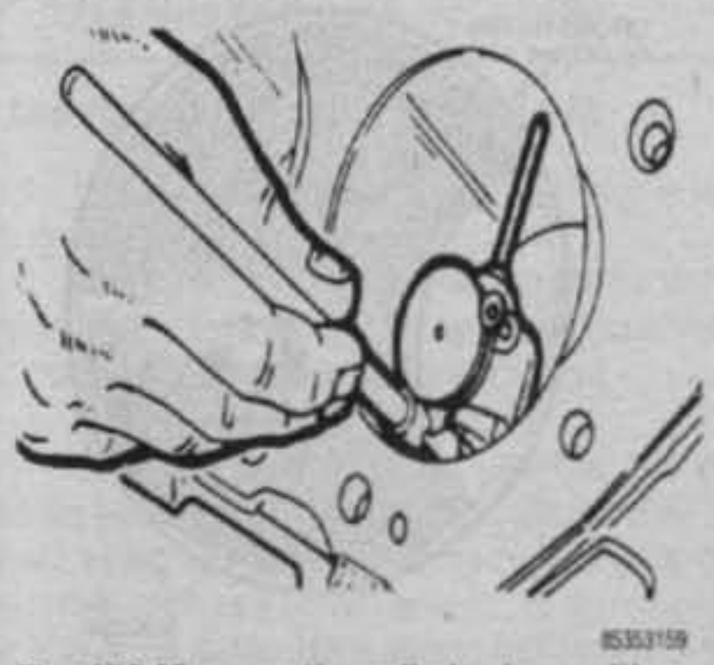

Fig. 158 Measure the cylinder bore with a dial gauge

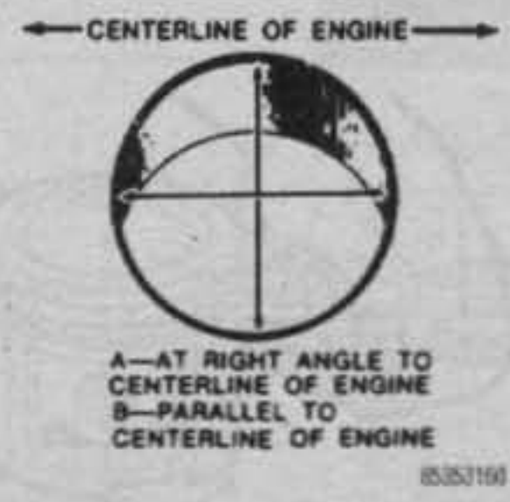

Fig. 159 Cylinder bore measuring points. Take the upper measurement one-half inch (13mm) below the edge, and the lower measurement one-half inch (13mm) above the top of the piston at TDC

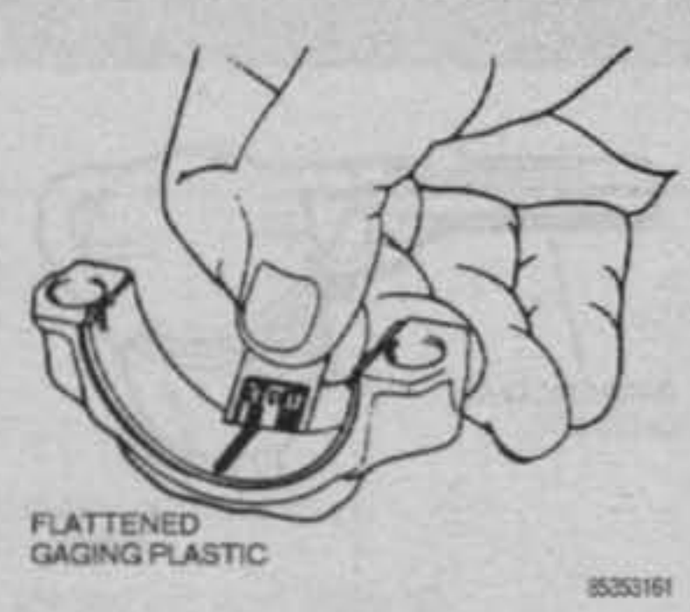

Fig. 160 Check the connecting rod bearing clearance with Plastigage®

tion variance is 0.005 in. (0.13mm). The block cannot be planed, so it will have to be replaced if too distorted. Using a micrometer, check the cylinders for out-of-roundness.

Connecting Rods and Bearings

See Figure 160

Wash connecting rods in cleaning solvent and dry with compressed air. Check for twisted or bent rods and inspect for nicks or cracks. Replace connecting rods that are damaged.

Inspect journals for roughness and wear. Slight roughness may be removed with a fine grit polishing cloth saturated with engine oil. Burrs may be removed with a fine oil stone by moving the stone on the journal circumference. Do not move the stone back and forth across the journal. If the journals are scored or ridged, the crankshaft must be replaced.

The connecting rod journals should be checked for out-of-round and correct size with a micrometer.

➡Crankshaft rod journals will normally be standard size. If any undersized bearings are used, the size will be stamped on a counterweight.

If plastic gauging material is to be used:

1. Clean oil from the journal bearing cap, connecting rod and outer and inner surfaces of the bearing inserts. Position the insert so that the tang is properly aligned with the notch in the rod and cap.
2. Place a piece of plastic gauging material in the center of lower bearing shell.
3. Remove the bearing cap and determine the bearing clearances by comparing the width of the flattened plastic gauging material at its widest point with the graduation on the container. The number within the graduation on the envelope indicates the clearance in thousandths of an inch or millimeters. If this clearance is excessive, replace the bearing and recheck the clearance with the plastic gauging material. Lubricate the bearing with engine oil before installation. Repeat the procedure on the remaining connecting rod bearings. All rods must be connected to their journals when rotating the crankshaft, to prevent engine damage.

Pistons

See Figures 161 and 162

Clean varnish from piston skirts and pins with a cleaning solvent. DO NOT WIRE BRUSH ANY PART OF THE PISTON. Clean the ring grooves with a groove cleaner and make sure oil ring holes and slots are clean.

Inspect the piston for cracked ring lands, skirts or pin bosses, wavy or worn ring lands, scuffed or damaged skirts, eroded areas at the top of the piston. Replace pistons that are damaged or show signs of excessive wear. Inspect the grooves for nicks or burrs that might cause the rings to hang up.

Measure piston skirt (across center line of piston pin) and check piston clearance.

MEASURING THE OLD PISTONS

Check used piston-to-cylinder bore clearance as follows:

1. Measure the cylinder bore diameter with a telescope gauge.
2. Measure the piston diameter. When measuring the pistons for size or taper, measurements must be made with the piston pin removed.
3. Subtract the piston diameter from the cylinder bore diameter to determine piston-to-bore clearance.
4. Compare the piston-to-bore clearances obtained with those clearances recommended. Determine if the piston-to-bore clearance is in the acceptable range.
5. When measuring taper, the largest reading must be at the bottom of the skirt.

SELECTING NEW PISTONS

1. If the used piston is not acceptable, check the service piston size and determine if a new piston can be selected. (Service pistons are available in standard, high limit and standard oversize.)
2. If the cylinder bore must be reconditioned, measure the new piston diameter, then hone the cylinder bore to obtain the preferred clearance.
3. Select a new piston and mark the piston to identify the cylinder for which it was fitted. On some vehicles, oversize pistons may be found. These pistons will be 0.010 in. (0.254mm) oversize.

CYLINDER HONING

See Figure 163

1. When cylinders are being honed, follow the manufacturer's recommendations for the use of the hone.
2. Occasionally, during the honing operation, the cylinder bore should be thoroughly cleaned and the selected piston checked for correct fit.
3. When finish-honing a cylinder bore, the hone should be moved up and down at a sufficient speed to obtain a very fine uniform surface finish in a cross-hatch pattern of approximately 45–65° included angle. The finish marks should be clean but not sharp, free from imbedded particles and torn or folded metal.
4. Permanently mark the piston for the cylinder to which it has been fitted and proceed to hone the remaining cylinders.

➡Handle the pistons with care. Do not attempt to force the pistons through the cylinders until the cylinders have been honed to the correct size. Pistons can be distorted through careless handling.

5. Thoroughly clean the bores with hot water and detergent. Scrub well with a stiff bristle brush and rinse thoroughly with hot water. It is extremely essential that a good cleaning operation be performed. If any of the abrasive material is allowed to remain in the cylinder bores, it will rapidly wear the new rings and cylinder bores. The bores should be swabbed several times with light engine oil and a clean cloth and then wiped with a clean dry cloth. CYLINDERS SHOULD NOT BE CLEANED WITH KEROSENE OR GASOLINE! Clean the remainder of the cylinder block to remove the excess material spread during the honing operation.

CHECKING CYLINDER BORE

Cylinder bore size can be measured with inside micrometers or a cylinder gauge. The most wear will occur at the top of the ring travel.

Reconditioned cylinder bores should be held to not more than 0.001 in. (0.0254mm) taper.

If the cylinder bores are smooth, the cylinder walls should not be deglazed. If

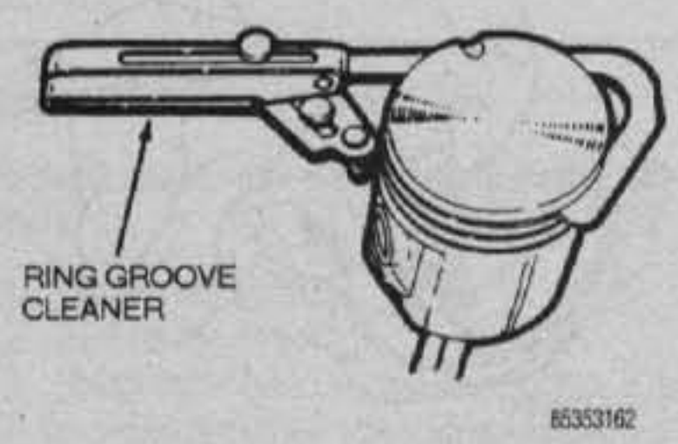

Fig. 161 Clean the piston ring grooves

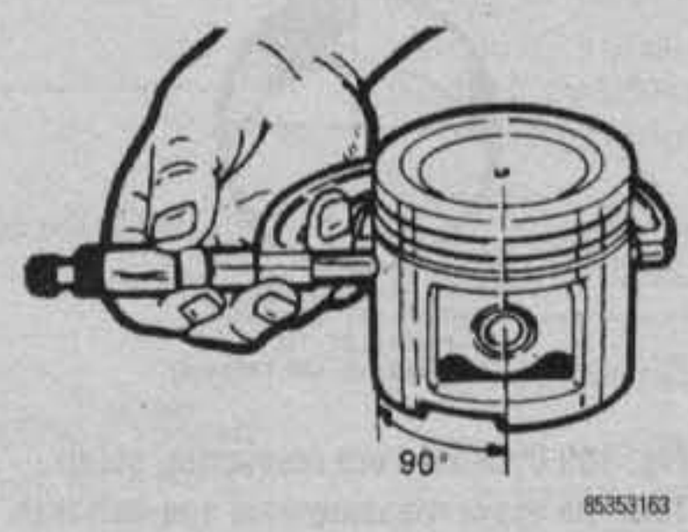

Fig. 162 Measure the piston prior to fitting

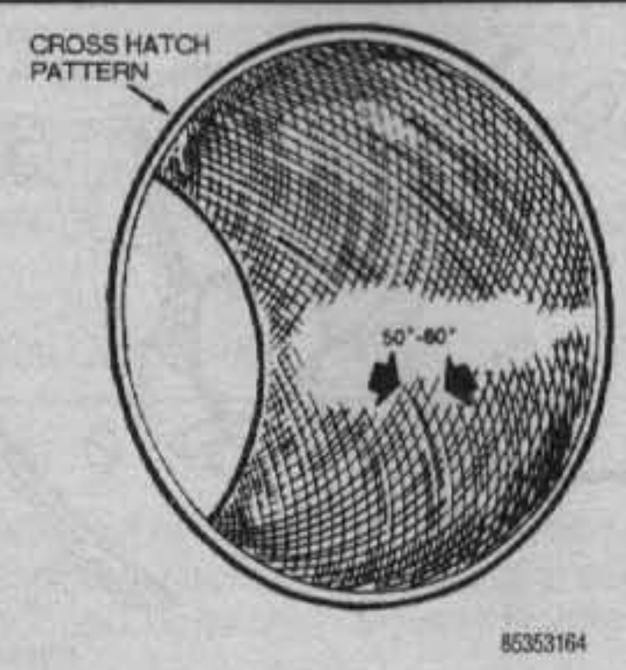

Fig. 163 Cylinder bore after honing

the cylinder walls are scored, the walls may have to be honed before installing new rings. It is important that reconditioned cylinder bores be thoroughly washed with a soap and water solution to remove all traces of abrasive material to eliminate premature wear.

RING TOLERANCES

When installing new rings, ring gap and side clearance should be checked as follows:

Piston Ring and Rail Gap

See Figure 164

Each ring and rail gap must be measured with the ring or rail positioned squarely and at the bottom of the ring travel area of the bore.

Side Clearance

See Figure 165

Each ring must be checked for side clearance in its respective piston groove by inserting a feeler gauge between the ring and its upper land. The piston grooves must be cleaned before checking the ring for side clearance specifications. To check oil ring side clearance, the oil rings must be installed on the piston.

RING INSTALLATION

See Figures 166, 167, 168 and 169

For service ring specifications and detailed installation productions, refer to the instructions furnished with the parts package.

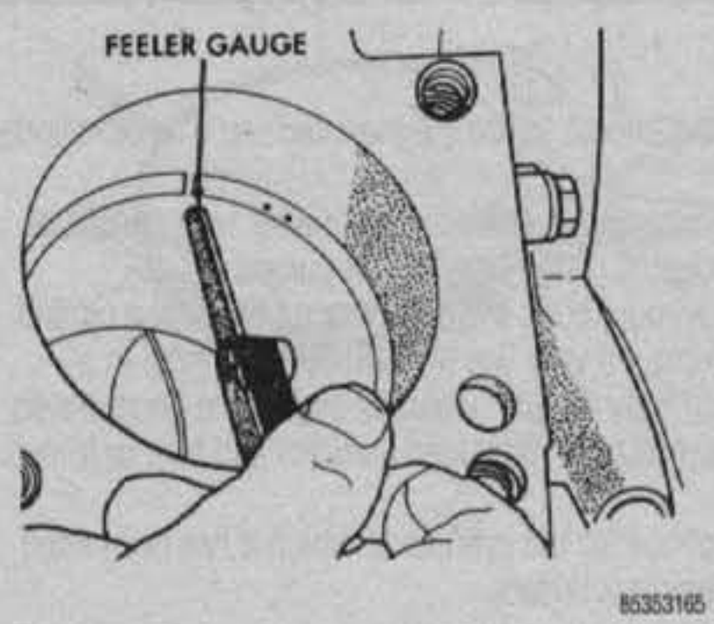

Fig. 164 Ring end-gap measurement

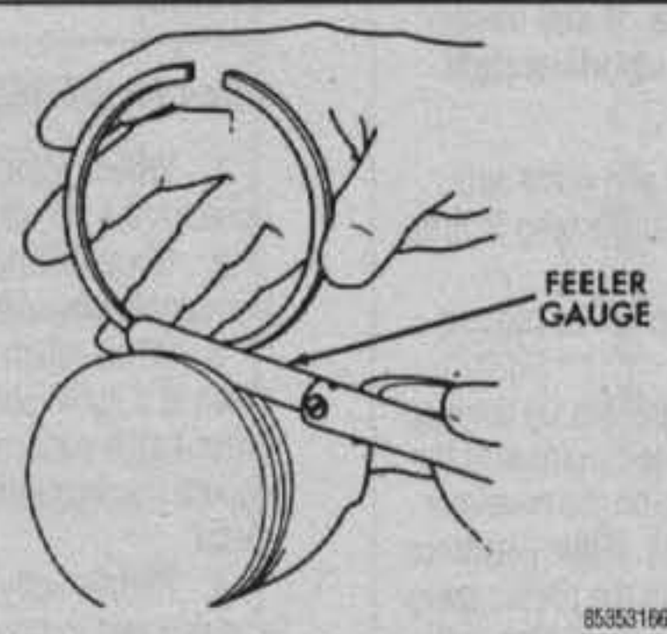

Fig. 165 Ring side clearance measurement

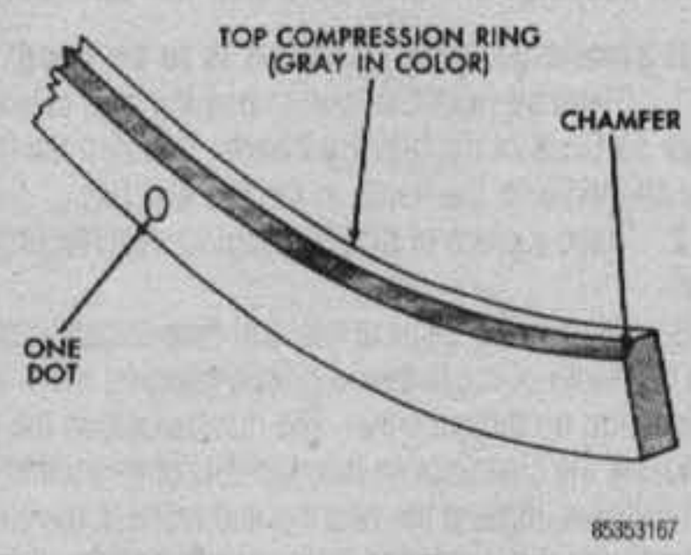

Fig. 166 Top compression ring identification

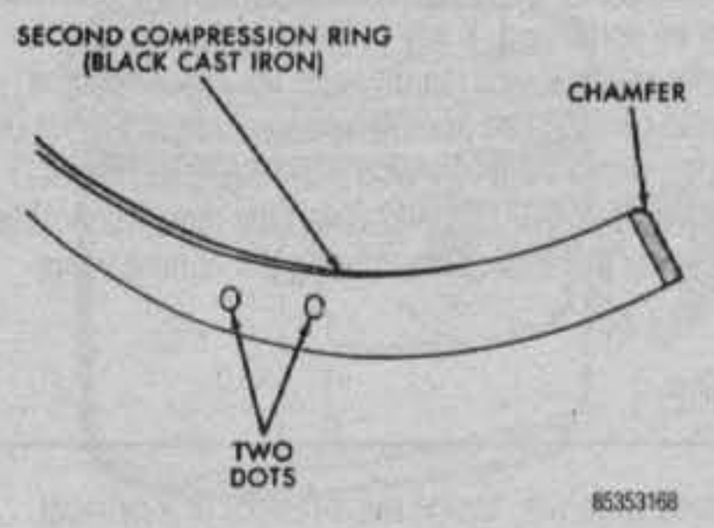

Fig. 167 Second compression ring identification

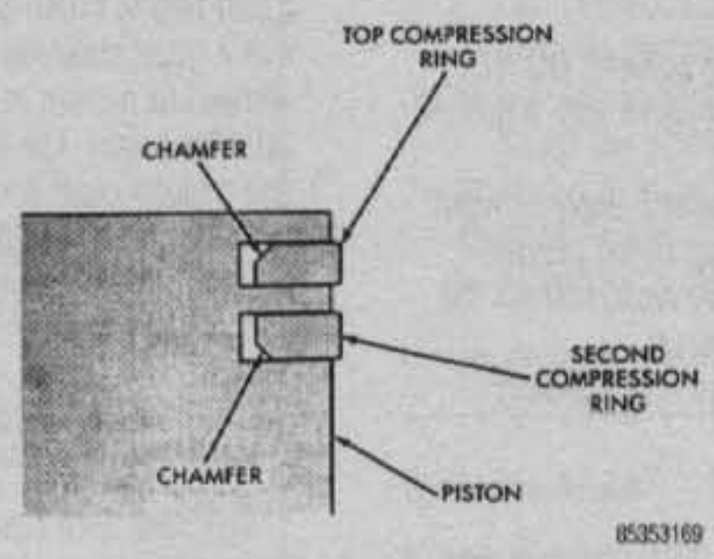

Fig. 168 Compression ring chamfer location

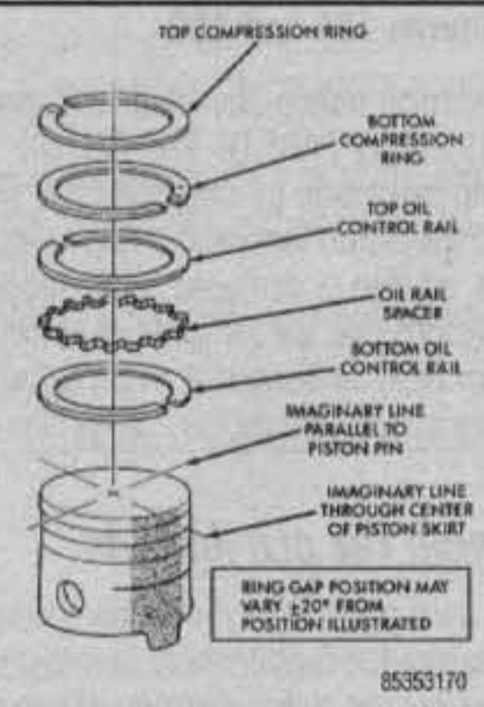

Fig. 169 Ring gap position

PISTON ASSEMBLY & INSTALLATION

See Figures 170, 171, 172 and 173

1. Using a ring expander, install new rings in the grooves, with their gaps staggered to be 270° apart.
2. Using a straightedge, check the rods for straightness. Check, also, for cracks. Before assembling the block, it's a good idea to have the block checked for cracks with Magnaflux® or its equivalent.
3. Install the pins and retainers.
4. Coat the pistons with clean engine oil and apply a ring compressor. Position the assembly over the cylinder bore and slide the piston into the cylinder slowly, taking care to avoid nicking the walls. The pistons will have a mark on the crown, such as a groove or notch or stamped symbol. This mark indicates the side of the piston which should face front. Lower the piston slowly, until it bottoms on the crankshaft. A good idea is to cover the rod studs with length of rubber hose to avoid nicking the crank journals. Assemble the rod caps at this time. Check the rod bearing clearances using Plastigage®, going by the instructions on the package.

➡Verify that the oil squirt holes in the rods face the camshaft and the arrows on the pistons face the front of the engine.

5. Install the bearing caps with the stamped numbers matched. Torque the caps to the figure shown in the Torque Specifications Chart. See the accompanying illustrations for proper piston and rod installation.

Rear Main Oil Seal

REPLACEMENT

2.5L Engine

See Figure 174

1. Remove the transmission.
2. Remove the flywheel.
3. Pry out the seal from around the crankshaft flange.

To install:

4. Coat the inner lip of the new seal with clean engine oil.
5. Gently tap the new seal into place, flush with the block, using a rubber or plastic mallet.
6. Install the flywheel.

➡New bolts MUST be used when installing the flywheel or torque converter plate. Tighten the new bolts to 50 ft. lbs. (68 Nm).

7. Install the transmission.

4.0L and 4.2L Engines

See Figures 174, 175 and 176

This seal is a two piece neoprene type with a single lip.

1. Raise and support the vehicle on jackstands.

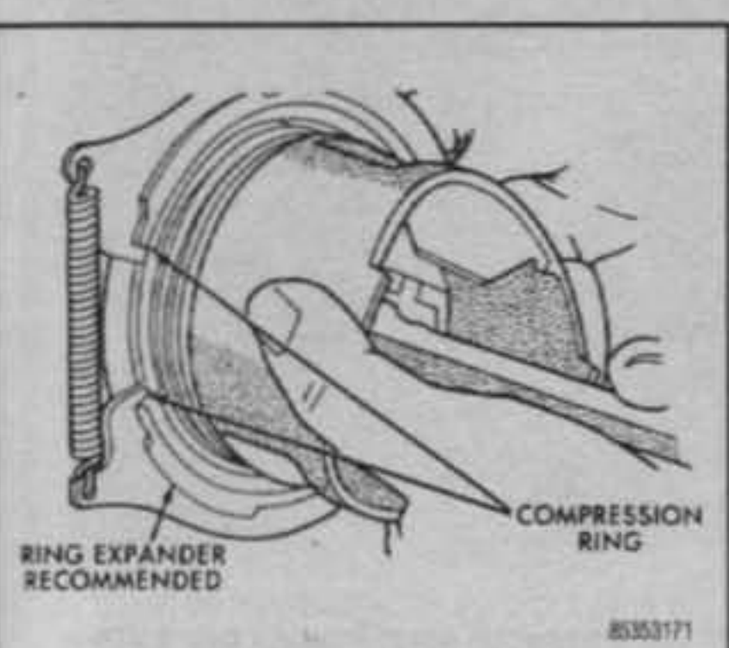

Fig. 170 Compression ring installation

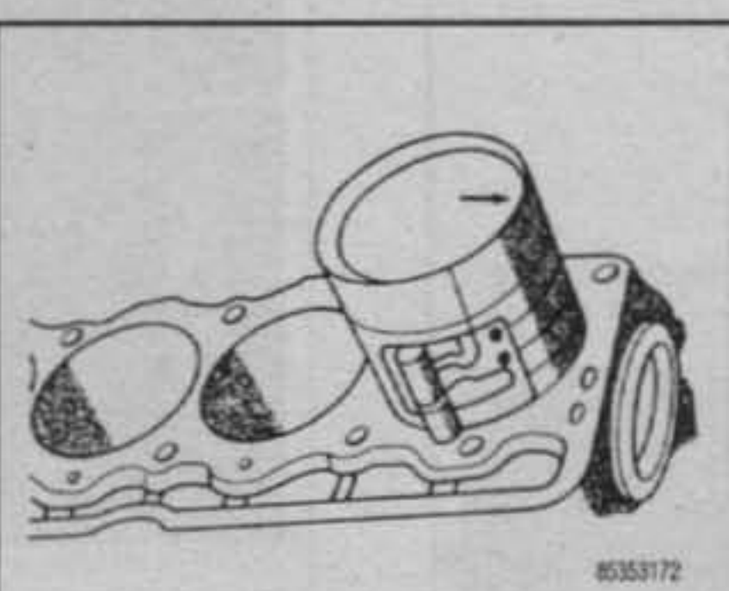

Fig. 171 Rod and piston assembly installation. Ensure that the arrow on the piston top faces the front of the engine

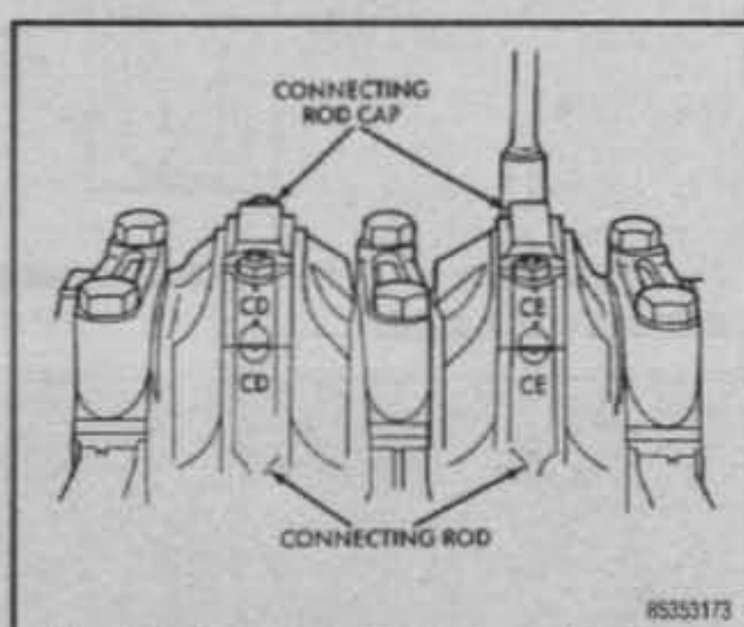

Fig. 172 The connecting rods and caps are stamped with either numbers or a two-letter combination

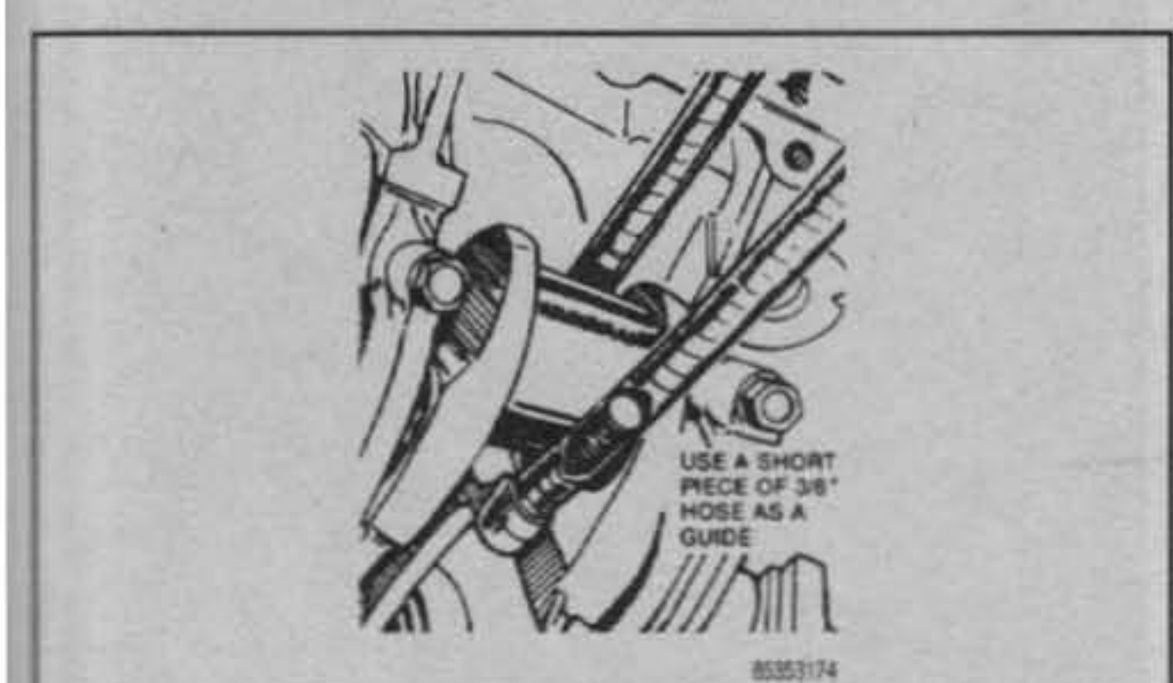

Fig. 173 Use lengths of vacuum hose or rubber tubing to protect the crankshaft journals and cylinder walls during piston installation

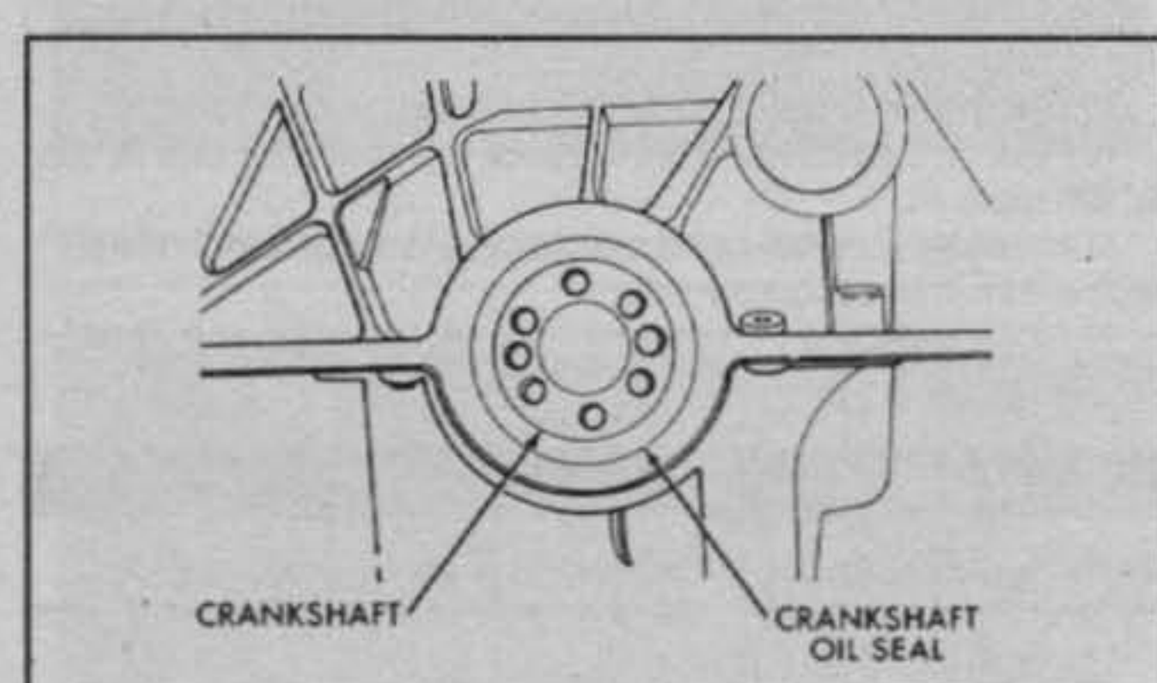

Fig. 174 Crankshaft oil seal location—2.5L, 4.0L and 4.2L engines

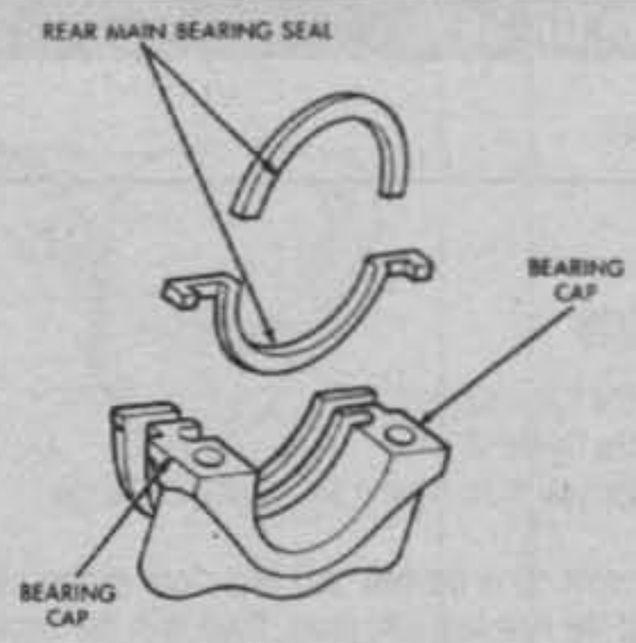

Fig. 175 Rear main bearing cap (two-piece) oil seal—4.0L and 4.2L engines

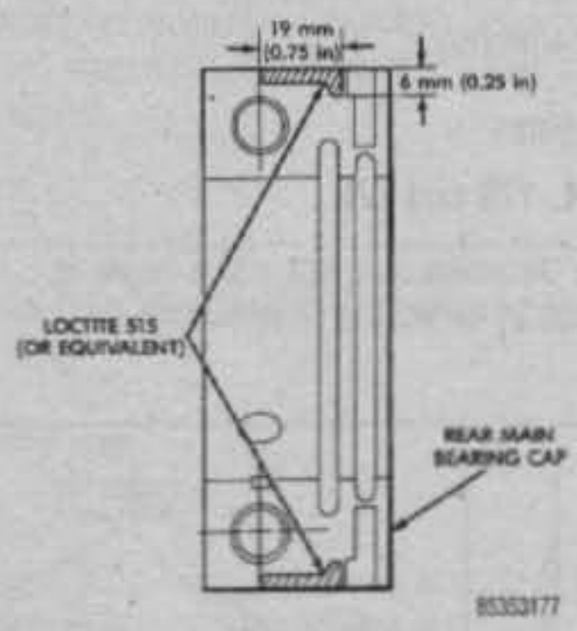

Fig. 176 Location of Loctite 515® or equivalent—4.0L and 4.2L engines

2. Remove the oil pan.
3. Remove the rear main bearing cap and discard the lower seal.
4. Using a center punch, carefully drive the upper half of the seal out of the block just far enough to graph with a pliers and pull out.
5. Remove the oil pan front and rear seals and the side gaskets.

To install:

6. Clean all gasket surfaces.
7. Wipe clean the sealing surface of the crankshaft and coat it lightly with engine oil.
8. Coat the lip of the upper seal with engine oil and install it in the block. The lip faces forward.
9. Place the lower half of the seal into the bearing cap.
10. Coat the outer curved surface of the seal with liquid soap. Coat the seal lip with engine oil.
11. Install the lower seal into the cap, pressing firmly. Be sure the seal is flush with the cylinder block pan rail.
12. Apply Loctite 515®, or equivalent to the rear bearing cap as illustrated. The bead should be 0.125 in. (3.0mm) thick.

WARNING

Do not apply Loctite 515® or equivalent to the lip of the seal!

13. Install the rear main cap.
14. Tighten all main bearing cap bolts gradually to 80 ft. lbs. (108 Nm).
15. Replace the oil pan.
16. Install the flywheel or converter drive plate.

Crankshaft

REMOVAL

2.5L, 4.0L and 4.2L Engines

See Figures 177 thru 182

1. Remove the engine from the vehicle and mount it on a work stand.
2. Drain the oil.

CAUTION

The EPA warns that prolonged contact with used engine oil may cause a number of skin disorders, including cancer! You should make every effort to minimize your exposure to used engine oil. Protective gloves should be worn when changing the oil. Wash your hands and any other exposed skin areas as soon as possible after exposure to used engine oil. Soap and water, or waterless hand cleaner should be used.

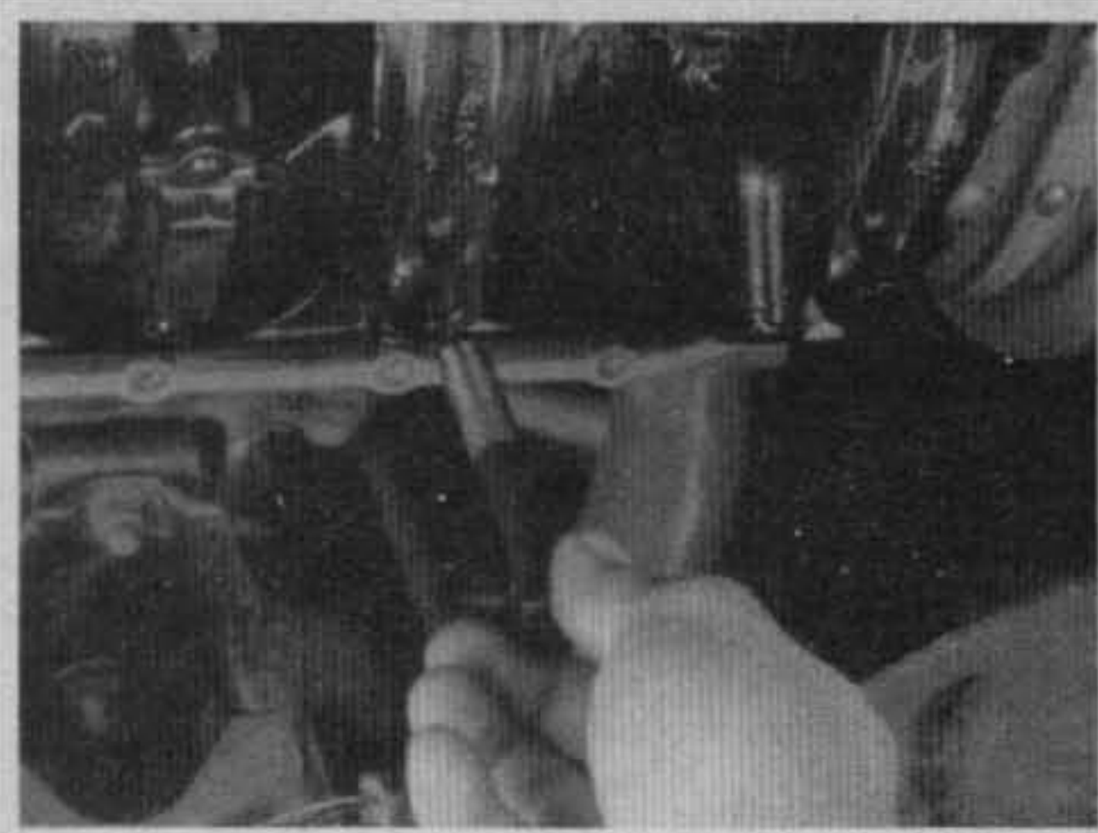

85353178

Fig. 177 Removing one of the crankshaft main bearing cap bolts—2.5L engine shown

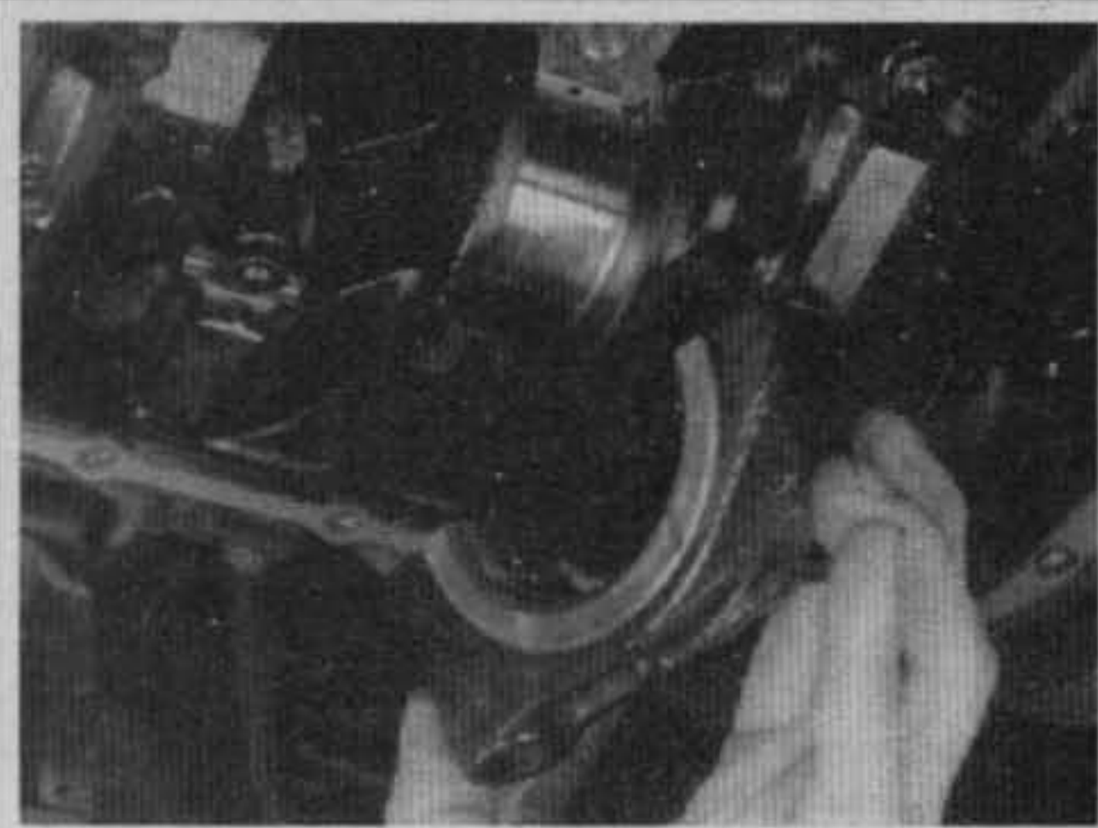

85353179

Fig. 178 Removing one of the crankshaft main bearing caps—2.5L engine shown

3. Remove the flywheel or torque converter, match marking the pieces for installation.
4. Remove all drive belts.
5. Remove the fan and hub assembly.
6. Remove the crankshaft pulley and vibration damper.
7. Remove the timing case cover.
8. Remove the oil pan.
9. Remove the oil pump and pickup.
10. Remove the rod bearing caps, marking them for installation.

The main bearing caps are numbered from front to rear and have an arrow to indicate the forward position. The upper main bearing inserts are grooved to provide oil channels while the lower inserts are smooth.

11. Remove the main bearing caps and lower inserts, marking them for installation as follows:
    a. Remove the lower insert from the bearing cap.
    b. Remove the upper insert by loosening all the other bearing caps and inserting a small cotter pin tool in the crankshaft journal oil hole. Bend the cotter pin as illustrated to fabricate the tool.
    c. With the cotter pin tool in place, rotate the crankshaft so that the upper bearing insert will rotate in the direction of its locking tab.

➡Because there is no hole in the No. 3 main journal, use a soft-faced tool, such as a tongue depressor, to remove the bearing insert. After withdrawing the insert approximately one inch (25mm), it can be removed by applying pressure under the tab.

12. Lift out the crankshaft.

➡A replacement oil pickup tube must be used. Do not attempt to install the original. Make sure the plastic button is inserted in the bottom of the pickup screen. Always use a new rear main seal. If new bearings are installed, check clearances with Plastigage®.

INSPECTION

1. Check the crankshaft for wear or damage to the bearing surfaces of the journals. Crankshafts that are damaged can be reconditioned by a professional machine shop.
2. Using a dial indicator, check the crankshaft journal run-out. Measure the crankshaft journals with a micrometer to determine the correct size rod and main bearings to be used. Whenever a new or reconditioned crankshaft is installed, new connecting rod bearings and main bearings should be installed.
3. Clean all oil passages in the block (and crankshaft if it is being reused).

➡A new rear main seal should be installed any time the crankshaft is removed or replaced.

4. Wipe the oil from the crankshaft journal and the outer and inner surfaces of the bearing shell.
5. Place a piece of plastic gauging material in the center of the bearing.
6. Use a floor jack or other means to hold the crankshaft against the upper bearing shell. This is necessary to obtain accurate clearance readings when using plastic gauging material.
7. Install the bearing cap and bearing. Place engine oil on the cap bolts and install. Torque the bolts to specification.
8. Remove the bearing cap and determine the bearing clearance by comparing the width of the flattened plastic gauging material at its widest point with the graduations on the gauging material container. The number within the graduation on the envelope indicates the clearance in millimeters or thousandths of an inch. If the clearance is greater than allowed, REPLACE BOTH BEARING SHELLS AS A SET. Recheck the clearance after replacing the shells.

INSTALLATION

➡Main bearing clearances must be corrected by the use of selective upper and lower shells. UNDER NO CIRCUMSTANCES should shims be placed behind the shells to compensate for wear!

1. Install new bearing upper halves in the block. If the crankshaft has been turned to resurface the journals, undersized bearing must be used to compensate. Lay the crankshaft in the block.
2. Install the lower bearing halves in the caps.
3. Use Plastigage® to check bearing fit.

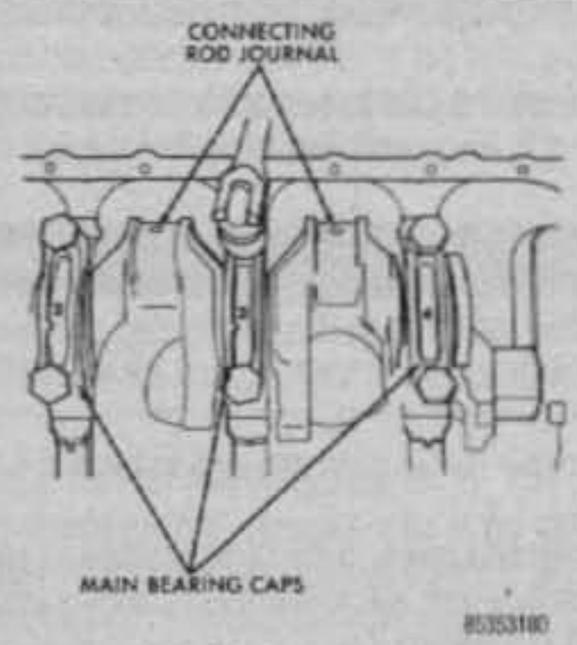

Fig. 179 Removing the crankshaft main bearing caps and lower inserts

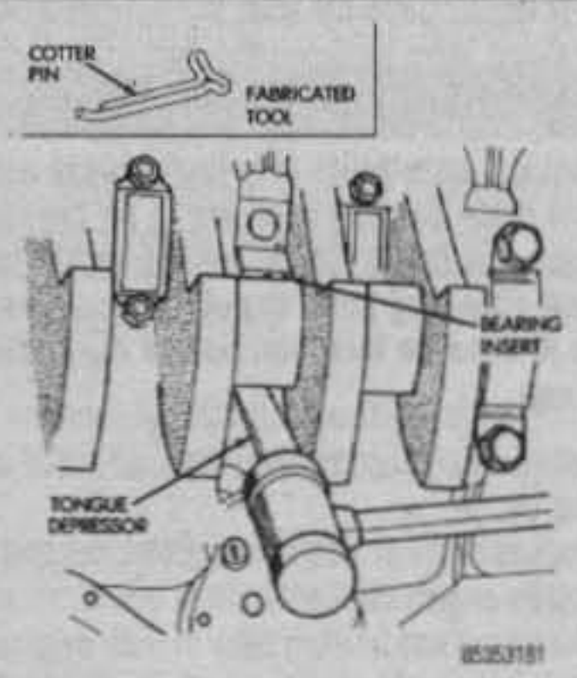

Fig. 180 Removing the upper inserts

Fig. 181 Torquing the rod bearing cap bolts—2.5L engine shown

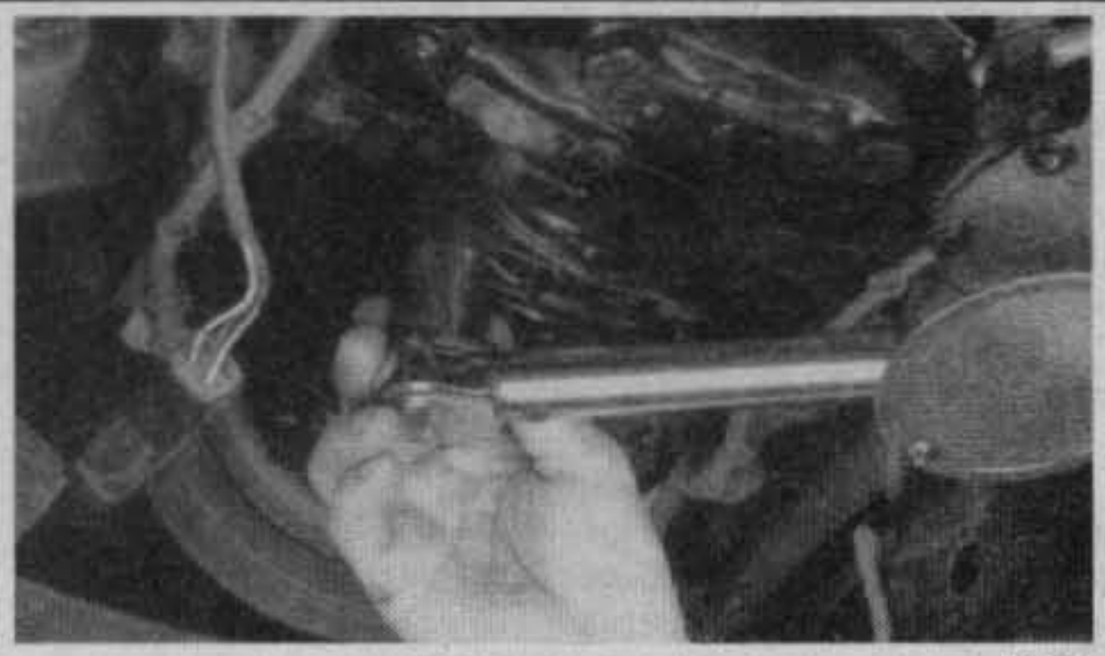

Fig. 182 Torquing the main bearing cap bolts—2.5L engine shown

4. When the bearings are properly fitted, install and torque the bearing caps.

5. Check crankshaft end-play to determine the need for thrust washers.

6. While you're at it, it's a good idea to replace the rear main seal at this time.

7. Install sufficient oil pan bolts in the block to align with the connecting rod bolts. Use rubber bands between the bolts to position the connecting rods as required. Connecting rod position can be adjusted by increasing the tension on the rubber bands with additional turns around the pan bolts or thread protectors.

8. Position the upper half of main bearings in the block and lubricate them with engine oil.

9. Position crankshaft keyway in the same position as removed and lower it into block. The connecting rods will follow the crank pins into the correct position as the crankshaft is lowered.

10. Lubricate the thrust flanges with clean engine oil or engine rebuilding oil. Install caps with the lower half of the bearings lubricated with engine oil. Lubricate the cap bolts with engine oil and install, but do not tighten.

11. With a block of wood, bump the shaft in each direction to align the thrust flanges of the main bearing. After bumping the shaft in each direction, wedge the shaft to the front and hold it while torquing the thrust bearing cap bolts.

➡In order to prevent the possibility of cylinder block and/or main bearing cap damage, the main bearing caps are to be tapped into their cylinder block cavity using a wood or rubber mallet before the bolts are installed. Do not use attaching bolts to pull the main bearing caps into their seats. Failure to observe this information may damage the cylinder block or a bearing cap.

12. Torque all main bearing caps to specification. Check crankshaft end-play, using a flat feeler gauge.

13. Remove the connecting rod bolt thread protectors and lubricate the connecting rod bearings with engine oil.

14. Install the connecting rod bearing caps in their original position. Torque the nuts to specification.

15. Install all parts in reverse order of removal. See related procedures in this section for component installation.

Flywheel/Flex Plate and Ring Gear

➡Flex plate is the term for a flywheel mated with an automatic transmission.

REMOVAL & INSTALLATION

All Engines

➡The ring gear is replaceable only on engines mated with a manual transmission. Engines with automatic transmissions have ring gears which are welded to the flex plate.

1. Remove the transmission and transfer case.

2. Remove the clutch, if equipped, or torque converter from the flywheel. The flywheel bolts should be loosened a little at a time in a cross pattern to avoid warping the flywheel. On Jeep vehicles with manual transmission, replace the pilot bearing in the end of the crankshaft if removing the flywheel.

3. The flywheel should be checked for cracks and glazing. It can be resurfaced by a machine shop.

4. If the ring gear is to be replaced, drill a hole in the gear between two teeth, being careful not to contact the flywheel surface.

5. Using a cold chisel at this point, crack the ring gear and remove it.

6. Polish the inner surface of the new ring gear and heat it in an oven to about 600°F (316°C). Quickly place the ring gear on the flywheel and tap it into place, making sure that it is fully seated.

➡Never heat the ring gear past 800°F (426°C), or the tempering will be destroyed.

7. Position the flywheel on the end of the crankshaft. Torque the bolts a little at a time, in a crisscross pattern, to the figure shown in the Torque Specifications Chart.

8. Install the clutch or torque converter.

9. Install the transmission and transfer case.

EXHAUST SYSTEM

See Figure 183

CAUTION

When working on exhaust systems, ALWAYS wear protective goggles! Avoid working on a hot exhaust system!

Muffler

REMOVAL & INSTALLATION

➡The following applies to exhaust systems using clamped joints. Most later model, original equipment systems use welded joints at the muffler. These joints will, of course, have to be cut.

1. Raise and support the rear end on jackstands, placed under the frame, so that the axle hangs freely.

2. Remove the muffler clamps.

3. Remove the tailpipe hanger clamp.

4. Spray the joint liberally with a penetrant/rust dissolver compound such as Liquid Wrench®, WD-40®, or equivalent.

5. If the tailpipe cannot be pulled or twisted free from the muffler, drive a chisel between the muffler and tailpipe at several places to free it.

6. Disconnect the muffler hanger.

7. If the pipe leading into the muffler is not to be replaced, and cannot be pulled free of the muffler, heat the joint with an oxyacetylene torch until it is cherry red. Place a block of wood against the front of the muffler and drive it rearward to disengage it from the pipe.

If the pipe is being replaced, use a chisel to free it.

CAUTION

When using a torch, make certain that no combustibles, brake or fuel lines are in the immediate area of the torch.

8. When installing the new muffler, make sure that the locator slot and tab at the tailpipe joint index each other.

9. Drive the muffler onto the front pipe.

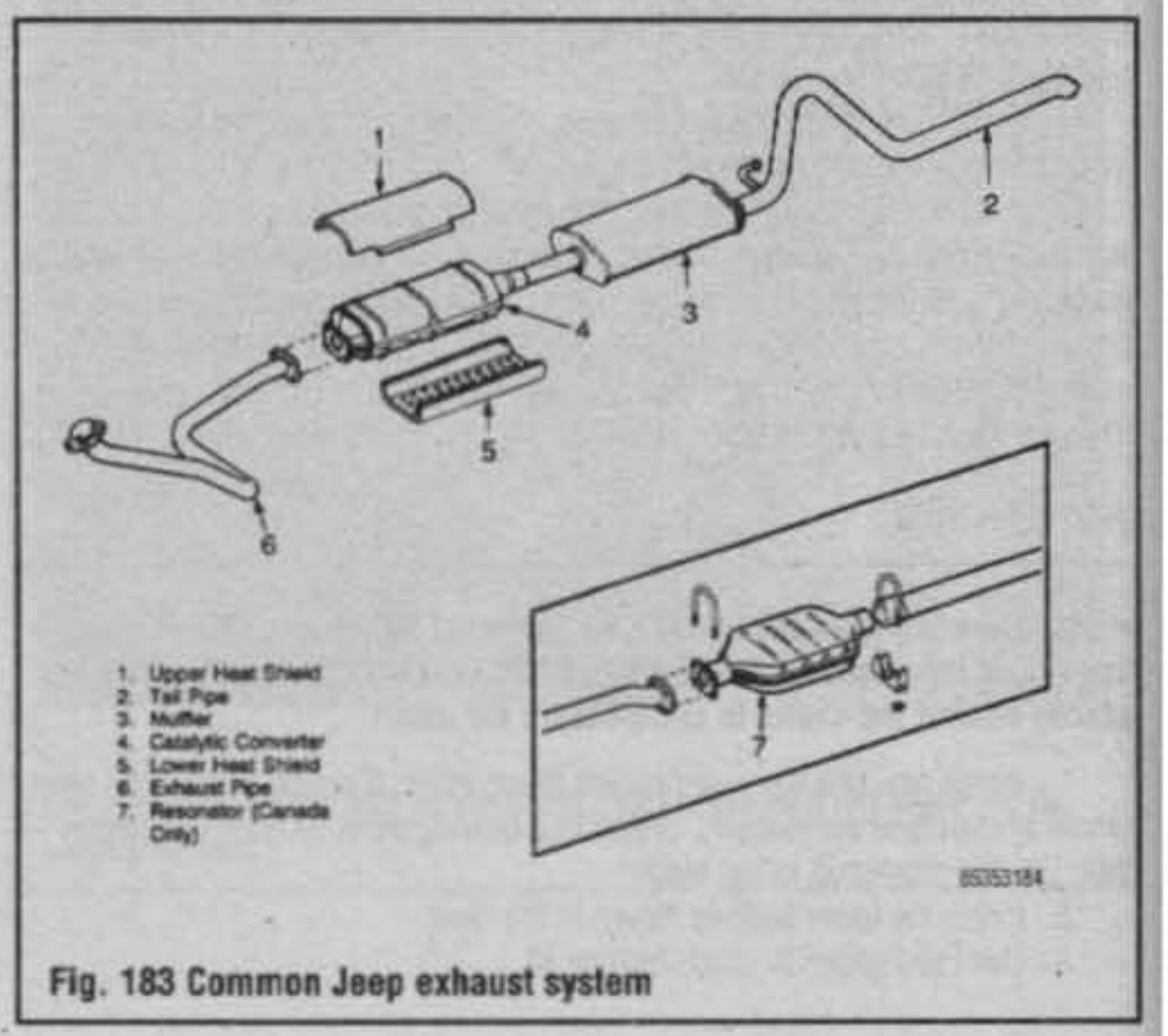

Fig. 183 Common Jeep exhaust system

10. Position the system, without muffler clamps, under the Jeep and install the hangers. Make certain that there is sufficient clearance between the system components and the floor pan and axle. Then, install the muffler clamps and tighten the hangers.

➡Install the muffler clamps so that the shafts of the U-bolts cover the slots in the joint flanges.

Front Exhaust Pipe (Head Pipe)

REMOVAL & INSTALLATION

1. Raise and support the front end on jackstands.
2. Disconnect any oxygen sensor wires or air injection pipes.
3. Disconnect the front pipe at the manifold(s).
4. Disconnect the rear end of the pipe from the muffler or catalytic converter.
5. Installation is the reverse of removal. Torque the pipe-to-manifold nuts to 17 ft. lbs. (23 Nm) for 4-cylinder engines, or 20 ft. lbs. (27 Nm) for the 6-cylinder engines. Make sure the pipe is properly aligned.

Rear Exhaust Pipe or Tailpipe

REMOVAL & INSTALLATION

➡Some vehicle use an intermediate pipe, also called a rear exhaust pipe. This pipe connects the front pipe with the muffler, or runs between the converter and muffler.

1. Raise and support the rear end on jackstands.
2. If just the intermediate pipe is being replaced, cut it at the joints and collapse and remove the remainder from the front pipe and muffler or converter. If adjoining parts are also being replaced, the pipe may be chiseled off.
3. If just the tailpipe is being replaced, cut it just behind the muffler and collapse and remove the remainder from the muffler flange. Remove the tailpipe hanger.
4. When installing any pipe, position it in the system and make sure that it is properly aligned and has sufficient clearance at the floor pan. Position U-bolts so that the bolt shafts cover any slots in the pipe flanges. When the system is correctly aligned, tighten all U-bolts and hangers.

Catalytic Converter

REMOVAL & INSTALLATION

1. Raise and support the rear end on jackstands.
2. Disconnect the downstream air injection tube at the converter.
3. On the 4-cylinder engine, the front pipe is bolted to the converter at a facing flange. On the 6-cylinder engines, the front pipe and converter are clamped together at a slip-fit joint. On all engines, the rear joint of the converter is a slip-fit.
4. To avoid damaging any components, it will probably be necessary to heat any slip-fit joint with an oxyacetylene torch, until the joint is cherry red. Then, place a block of wood against the converter and drive it off of the pipe.

CAUTION

When using a torch, make certain that no combustibles, brake or fuel lines are in the immediate area of the torch.

5. Position the replacement converter in the system and install the rear clamp. Hand tighten the nuts.
6. On 4-cylinder engines: bolt the flanges together at the front end. Tighten the bolts to 25 ft. lbs. (34 Nm). Tighten the rear clamp nuts to 45 ft. lbs. (61 Nm).
7. On 6-cylinder engines, install the front clamp, make sure that the converter is properly positioned and tighten the front and rear clamp nuts to 45 ft. lbs. (61 Nm).
8. Install the downstream air injection tube and tighten the clamps to 36–48 inch lbs. (4–5 Nm).
9. Lower the Jeep.

ENGINE MECHANICAL SPECIFICATIONS
1987–89 2.5L Engine

Component	U.S.	Metric
Cylinder Bore Diameter (Standard)	3.8751–3.8775 in.	98.42–98.48 mm
Maximum Taper	0.001 in.	0.025 mm
Maximum Out-of-Round	0.001 in.	0.025 mm
Tappet Bore Diameter	0.9055–0.9065 in.	23.000–23.025 mm
Cylinder Block Flatness	0.001 per 1 in.	0.03 per 25 mm
	0.002 per 6 in.	0.05 per 152 mm
Main Bearing Bore Diameter	2.691–2.692 in.	68.35–68.38 mm
Cylinder Head		
Combustion Chamber Volume	3.04–3.23 cu. in.	49.9–52.9 cc
Valve Arrangement		E-I-I-E-E-I-I-E
Valve Guide ID (Integral)	0.313–0.314 in.	7.95–7.97 mm
Valve Stem-to-Guide Clearance	0.001–0.003 in.	0.02–0.07 mm
Intake Valve Seat Angle		44°30'
Exhaust Valve Seat Angle		44°30'
Valve Seat Width	0.040–0.060 in.	1.02–1.52 mm
Valve Seat Runout	0.0025 in.	0.064 mm
Cylinder Head Flatness	0.001 per 1 in.	0.03 per 25 mm
	0.002 per 6 in.	0.05 per 152 mm
Oil Pressure		
At Idle Speed (800 rpm)	25–35 psi	172–241 kPa
At 1600+ rpm	37–75 psi	255–517 kPa
Oil Pressure Relief	75 psi	517 kPa
Oil Pump		
Gear-to-Body Clearance (Radial)	0.002–0.004 in.	0.051–0.102 mm
Preferred	0.002 in.	0.051 mm
Gear End Clearance — Plastigage	0.002–0.006 in.	0.051–0.152 mm
Preferred	0.002 in.	0.051 mm
Gear End Clearance — Feeler Gauge	0.004–0.008 in.	0.1016–0.2032 mm
Preferred	0.007 in.	0.1778 mm
Rocker Arms, Push Rods and Tappets		
Rocker Arm Ratio		1.6:1
Push Rod Length	9.500–9.520 in.	241.300–241.808 mm
Push Rod Diameter	0.312-0.315 in.	7.92–8.00 mm
Hydraulic Tappet Diameter	0.904–0.9045 in.	22.962–22.974 mm
Tappet-to-Bore Clearance	0.001–0.0025 in.	0.03–0.05 mm
Pistons		
Weight (Less Pin)	19.86–20.00 oz.	563–567 grams
Piston Pin Bore		
Centerline-to-Piston Top	1.601 in.	40.67 mm
Piston-to-Bore Clearance	0.0013–0.0021 in.	0.033–0.053 mm
Piston Ring Gap Clearance — Compression (Both)	0.010–0.020 in.	0.25–0.51 mm
Piston Ring Gap Clearance — Oil Control Steel Rails	0.015–0.055 in.	0.381–1.397 mm
Piston Ring Side Clearance		
No. 1 Compression	0.001–0.0032 in.	0.0254–0.0813 mm
No. 2 Compression	0.001–0.0032 in.	0.254–0.241 mm
Oil Control	0.001–0.0085 in.	0.254–0.2032 mm

85353C1A

ENGINE MECHANICAL SPECIFICATIONS
1987–89 2.5L Engine

Component	U.S.	Metric
Tappet Clearance		Zero lash (hyd.) tappets
End Play		Zero (engine operation)
Bearing Clearance	0.001–0.003 in.	0.025–0.076 mm
Bearing Journal Diameter		
No. 1	2.029–2.030 in.	51.54–51.56 mm
No. 2	2.019–2.020 in.	51.28–51.31 mm
No. 3	2.009–2.010 in.	51.03–51.05 mm
No. 4	1.999–2.000 in.	50.78–50.80 mm
Base Circle Runout	0.001 in. max.	0.03 mm max.
Cam Lobe Lift		
Intake	0.265 in.	6.731 mm
Exhaust	0.265 in.	6.731 mm
Valve Lift		
Intake	0.424 in.	10.770 mm
Exhaust	0.424 in.	10.770 mm
Intake Valve Timing		
Opens		12° BTDC
Closes		78° ABDC
Exhaust Valve Timing		
Opens		56° BBDC
Closes		34° ATDC
Valve Overlap		46°
Intake Duration		270°
Exhaust Duration		270°
Connecting Rods		
Total Weight (Less Bearings)	23.2–23.5 oz.	657–665 grams
Total Length (Center-to-Center)	6.123–6.127 in.	155.52–155.62 mm
Piston Pin Bore Diameter	0.9288–0.9298 in.	23.59–23.62 mm
Connecting Rod Bore (Less Bearings)	2.2080–2.2085 in.	56.08–56.09 mm
Bearing Clearance	0.001–0.0025 in.	0.03–0.08 mm
Preferred	0.0015–0.0020 in.	0.044–0.050 mm
Side Clearance	0.010–0.019 in.	0.25–0.48 mm
Maximum Twist	0.001 per in.	0.025 per 25.4 mm
Maximum Bend	0.005 per in.	0.0127 per 25.4 mm
Crankshafts		
End Play	0.0015–0.0065 in.	0.038–0.165 mm
Main Bearing Journal Diameter	2.4996–2.5501 in.	63.489–63.502 mm
Main Bearing Journal Width		
No. 1	1.086–1.098 in.	27.58–27.89 mm
No. 2	1.271–1.273 in.	32.28–32.33 mm
Nos. 3–4–5	1.182–1.188 in.	30.02–30.18 mm
Main Bearing Clearance	0.001–0.0025 in.	0.03–0.06 mm
Preferred	0.002 in.	0.051 mm
Connecting Rod Journal Diameter	2.0934–2.0955 in.	53.17–53.23 mm
Connecting Rod Journal Width	1.070–1.076 in.	27.18–27.33 mm
Maximum Out-of-Round (All Journals)	0.0005 in.	0.013 mm
Maximum Taper (All Journals)	0.0005 in.	0.013 mm
Cylinder Block		
Deck Height	9.320 in.	236.73 mm
Deck Clearance	0.000 in.	0.000 mm

85353C10

ENGINE MECHANICAL SPECIFICATIONS
1990–91 2.5L Engine

Component	U.S.	Metric
Camshaft		
Tappet Clearance		Zero lash (hyd.) tappets
End Play		Zero (engine operation)
Bearing Clearance	0.001–0.003 in.	0.025–0.076 mm
Bearing Journal Diameter		
No. 1	2.029–2.030 in.	51.54–51.56 mm
No. 2	2.019–2.020 in.	51.28–51.31 mm
No. 3	2.009–2.010 in.	51.03–51.05 mm
No. 4	1.999–2.000 in.	50.78–50.80 mm
Base Circle Runout	0.001 in. max.	0.03 mm max.
Cam Lobe Lift		
Intake	0.265 in.	6.731 mm
Exhaust	0.265 in.	6.731 mm
Valve Lift		
Intake	0.424 in.	10.770 mm
Exhaust	0.424 in.	10.770 mm
Intake Valve Timing		
Opens		12° BTDC
Closes		78° ABDC
Exhaust Valve Timing		
Opens		56° BBDC
Closes		34° ATDC
Valve Overlap		46°
Intake Duration		270°
Exhaust Duration		270°
Connecting Rods		
Total Weight (Less Bearings)	23.2–23.5 oz.	657–665 grams
Total Length (Center-to-Center)	6.123–6.127 in.	155.52–155.62 mm
Piston Pin Bore Diameter	0.9288–0.9298 in.	23.59–23.62 mm
Connecting Rod Bore (Less Bearings)	2.2080–2.2085 in.	56.08–56.09 mm
Bearing Clearance	0.001–0.0025 in.	0.03–0.08 mm
Preferred	0.0015–0.0020 in.	0.044–0.050 mm
Side Clearance	0.010–0.019 in.	0.25–0.48 mm
Maximum Twist	0.001 in. per in.	0.001 mm per mm
Maximum Bend	0.001 in. per in.	0.001 mm per mm
Crankshafts		
End Play	0.0015–0.0065 in.	0.038–0.165 mm
Main Bearing Journal Diameter	2.4996–2.5001 in.	63.489–63.502 mm
Main Bearing Journal Width		
No. 1	1.086–1.098 in.	27.58–27.89 mm
No. 2	1.271–1.273 in.	32.28–32.33 mm
Nos. 3–4–5	1.182–1.188 in.	30.02–30.18 mm
Main Bearing Clearance	0.001–0.0025 in.	0.03–0.06 mm
Preferred	0.002 in.	0.051 mm
Connecting Rod Journal Diameter	2.0934–2.0955 in.	53.17–53.23 mm
Connecting Rod Journal Width	1.070–1.076 in.	27.18–27.33 mm
Maximum Out-of-Round (All Journals)	0.0005 in.	0.013 mm
Maximum Taper (All Journals)	0.0005 in.	0.013 mm
Cylinder Block		
Deck Height	9.320 in.	236.73 mm
Deck Clearance	0.000 in.	0.000 mm

85353C11

ENGINE MECHANICAL SPECIFICATIONS
1990–91 2.5L Engine

Component	U.S.	Metric
Cylinder Block		
Cylinder Bore Diameter (Standard)	3.8751–3.8775 in.	98.42–98.48 mm
Maximum Taper	0.001 in.	0.025 mm
Maximum Out-of-Round	0.001 in.	0.025 mm
Tappet Bore Diameter	0.9055–0.9065 in.	23.000–23.025 mm
Cylinder Block Flatness	0.001 per 1 in.	0.03 per 25 mm
	0.002 per 6 in.	0.05 per 152 mm
Main Bearing Bore Diameter	2.691–2.692 in.	68.35–68.38 mm
Cylinder Head		
Combustion Chamber Volume	3.04–3.23 cu. in.	49.9–52.9 cc
Valve Arrangement		E-I-I-E-E-I-I-E
Valve Guide ID (Integral)	0.313–0.314 in.	7.95–7.97 mm
Valve Stem-to-Guide Clearance	0.001–0.003 in.	0.02–0.07 mm
Intake Valve Seat Angle		44°30'
Exhaust Valve Seat Angle		44°30'
Valve Seat Width	0.040–0.060 in.	1.02–1.52 mm
Valve Seat Runout	0.0025 in.	0.064 mm
Cylinder Head Flatness	0.001 per 1 in.	0.03 per 25 mm
	0.002 per 6 in.	0.05 per 152 mm
Oil Pressure		
At Idle Speed (800 rpm)	25–35 psi	172–241 kPa
At 1600+ rpm	37–75 psi	255–517 kPa
Oil Pressure Relief	75 psi	517 kPa
Oil Pump		
Gear-to-Body Clearance (Radial)	0.002–0.004 in.	0.051–0.102 mm
Preferred	0.002 in.	0.051 mm
Gear End Clearance — Plastigage	0.002–0.006 in.	0.051–0.152 mm
Preferred	0.002 in.	0.051 mm
Gear End Clearance — Feeler Gauge	0.004–0.008 in.	0.1016–0.2032 mm
Preferred	0.007 in.	0.1778 mm
Rocker Arms, Push Rods and Tappets		
Rocker Arm Ratio		1.6:1
Push Rod Length	9.500–9.520 in.	241.300–241.808 mm
Push Rod Diameter	0.312–0.315 in.	7.92–8.00 mm
Hydraulic Tappet Diameter	0.904–0.9045 in.	22.962–22.974 mm
Tappet-to-Bore Clearance	0.001–0.0025 in.	0.03–0.05 mm
Pistons		
Weight (Less Pin)	19.86–20.00 oz.	563–567 grams
Piston Pin Bore		
Centerline-to-Piston Top	1.601 in.	40.67 mm
Piston-to-Bore Clearance	0.0013–0.0021 in.	0.033–0.053 mm
Piston Ring Gap Clearance — Compression (Both)	0.010–0.020 in.	0.25–0.51 mm
Piston Ring Gap Clearance — Oil Control Steel Rails	0.015–0.055 in.	0.381–1.397 mm
Piston Ring Side Clearance		
No. 1 Compression	0.001–0.0032 in.	0.0254–0.0813 mm
No. 2 Compression	0.001–0.0032 in.	0.254–0.241 mm
Oil Control	0.001–0.0085 in.	0.254–0.2032 mm

85353CA1

ENGINE MECHANICAL SPECIFICATIONS
1990–91 2.5L Engine

Component	U.S.	Metric
Pistons		
Piston Ring Groove Height		
Compression (Both)	0.0795–0.0805 in.	2.019–2.045 mm
Oil Control	0.188–0.1895 in.	4.78–4.80 mm
Piston Ring Groove Diameter		
No. 1 and No. 2	3.456–3.461 in.	87.78–87.90 mm
Oil Control	3.445–3.455 in.	87.50–87.75 mm
Piston Pin Bore Diameter	0.9308–0.9313 in.	23.624–23.655 mm
Piston Pin Diameter	0.9304–0.9309 in.	23.632–23.645 mm
Piston-to-Pin Clearance	0.0004–0.0006 in.	0.010–0.015 mm
Preferred	Loose 0.0006 in.	Loose 0.015 mm
Piston Pin-to-Connecting Rod	2000 lbs.-f Press-fit	8.9 kN Press-fit
Valves		
Valve Length (Tip-to-Gauge Dim. Line)		
Intake	4.899–4.924 in.	124.435–125.070 mm
Exhaust	4.927–4.952 in.	125.120–125.755 mm
Valve Stem Diameter	0.311–0.312 in.	7.89–7.98 mm
Stem-to-Guide Clearance	0.001–0.003 in.	0.02–0.05 mm
Intake Valve Head Diameter	1.905–1.915 in.	48.38–48.6 mm
Intake Valve Face Angle		45°
Exhaust Valve Head Diameter	1.495–1.505 in.	37.97–38.6 mm
Exhaust Valve Face Angle		45°
Maximum Allowable Removed for Tip Refinishing	0.010 in.	0.25 mm
Valve Springs Free Length	1.967 in.	49.962 mm
Valve Spring Tension Closed	80–90 lbs. @ 1.640 in.	355–400 N @ 41.656 mm
Valve Spring Tension Open	200 lbs. @ 1.216 in.	890 N @ 30.886 mm

85353CB1

ENGINE MECHANICAL SPECIFICATIONS
1992 2.5L Engine

Component	U.S.	Metric
Camshaft		
Hydraulic Tappet Clearance		Zero Lash
Bearing Clearance	0.001–0.003 in.	0.025–0.076 mm
Bearing Journal Diameter		
No. 1	2.029–2.030 in.	51.54–51.56 mm
No. 2	2.019–2.020 in.	51.28–51.31 mm
No. 3	2.009–2.010 in.	51.03–51.05 mm
No. 4	1.999–2.000 in.	50.78–50.80 mm
Base Circle Runout	0.001 in.—max.	0.03 mm—max.
Camshaft Lobe Lift	0.265 in.	6.731 mm
Valve Lift	0.424 in.	10.77 mm
Intake Valve Timing		
Opens		16°BTDC
Closes		74°ABDC
Exhaust Valve Timing		
Opens		60°BBDC
Closes		30°ATDC
Valve Overlap		46°
Intake Duration		270°
Exhaust Duration		270°
Crankshaft		
End Play	0.0015–0.0065 in.	0.038–0.165 mm
Main Bearing Journal Dia.	2.4996–2.5001 in.	63.489–63.502 mm
Main Bearing Journal Width		
No. 1	1.086–1.098 in.	27.58–27.89 mm
No. 2	1.271–1.273 in.	32.28–32.33 mm
Nos. 3–4–5	1.182–1.188 in.	30.02–30.18 mm
Main Bearing Clearance		0.03–0.06 mm
Preferred	0.001–0.0025 in.	0.051 mm
Preferred	0.002 in.	
Connecting Rod Journal Dia.	2.0934–2.0955 in.	53.17–53.23 mm
Connecting Rod Journal Width	1.070–1.076 in.	27.18–27.33 mm
Out-of-Round (Max. All Journals)	0.0005 in.	0.013 mm
Taper (Max. — All Journals)	0.0005 in.	0.013 mm
Cylinder Block		
Deck Height	9.320 in.	236.73 mm
Deck Clearance	0.000 in.	0.000 mm
Cylinder Bore Diameter		
Standard	3.8751–3.8775 in.	98.42–98.48 mm
Taper (Max.)	0.001 in.	0.025 mm
Out-of-Round (Max.)	0.001 in.	0.025 mm
Tappet Bore Diameter	0.9055–0.9065 in.	23.000–23.025 mm
Flatness	0.001 in. per 1 in.	0.03 mm per 25 mm
	0.002 in. per 6 in	0.05 mm per 152 mm
	0.008 in.—max. for total length	0.20 mm—max. for total length
Main Bearing Bore Dia.	2.691–2.692 in.	68.3514–68.3768 mm
Connecting Rods		
Total Weight (Less Bearing)	23.17–23.45 oz.	657–665 grams
Length (Center-to-Center)	6.123–6.127 in.	155.52–155.62 mm

85353C12

ENGINE MECHANICAL SPECIFICATIONS
1992 2.5L Engine

Component	U.S.	Metric
Piston Pin Bore Diameter	0.9288–0.9298 in.	23.59–23.62 mm
Bore (Less Bearings)	2.2080–2.2085 in.	56.08–56.09 mm
Bearing Clearance		0.025–0.076 mm
Preferred	0.001–0.003 in.	0.044–0.050 mm
Preferred	0.0015–0.0020 in.	
Side Clearance	0.010–0.019 in.	0.25–0.48 mm
Twist (Max.)	0.001 in. per in.	0.001 mm per mm
Bend (Max.)	0.001 in. per in.	0.001 mm per mm
Cylinder Compression Pressure		
Ratio		9.2:1
Pressure Range	120–150 psi	827–1034 kPa
Max. Variation Between Cylinders	30 psi	206 kPa
Cylinder Head		
Combustion Chamber	3.04–3.23 cu. in.	49.9–52.9 cc
Valve Guide I.D. (Integral)	0.313–0.314 in.	7.95–7.97 mm
Valve Stem-to-Guide Clearance	0.001–0.003 in.	0.025–0.076 mm
Intake Valve Seat Angle		44.5°
Exhaust Valve Seat Angle		44.5°
Valve Seat Width	0.040–0.060 in.	1.02–1.52 mm
Valve Seat Runout	0.0025 in.	0.064 mm
Flatness	0.001 in. per 1 in.	0.03 mm per 25 mm
	0.002 in. per 6 in.	0.05 mm per 152 mm
	0.008 in.—max. for total length	0.20 mm—max. for total length
Rocker Arms, Push Rods & Tappets		
Rocker Arm Ratio		1.6:1
Push Rod Length	9.500–9.520 in.	241.300–241.808 mm
Push Rod Diameter	0.312–0.315 in.	7.92–8.00 mm
Hydraulic Tappet Diameter	0.904–0.9045 inm.	22.962–22.974 mm
Tappet-to-Bore Clearance	0.001–0.0025 in.	0.025–0.063 mm
Valves		
Length (Tip-to-Gauge Dimension Line)		
Intake	4.899–4.924 in.	124.435–125.070 mm
Exhaust	4.927–4.952 in.	125.120–125.755 mm
Valve Stem Diameter	0.311–0.312 in.	7.899–7.925 mm
Step-to-Guide Clearance	0.001–0.003 in.	0.025–0.076 mm
Valve Head Diameter		
Intake	1.905–1.915 in.	48.387–48.641 mm
Exhaust	1.495–1.505 in.	37.973–38.227 mm
Valve Face Angle		
Intake		45°
Exhaust		45°
Tip Refinishing (Max. Allowable)	0.010 in.	0.25 mm
Valve Springs		
Free Length (Approx.)	1.967 in.	49.962 mm
Spring Tension		
Valve Closed	80–90 lbf @ 1.640 in.	355–400 N @ 41.656 mm
Valve Open	200 lbf @ 1.216 in.	890 N @ 30.886 mm
Inside Diameter	0.948–0.968 in.	24.08–24.59 mm

85353C2A

ENGINE MECHANICAL SPECIFICATIONS
1992 2.5L Engine

Component	U.S.	Metric
Pistons		
Weight (Less Pin)	19.86–20.00 oz.	563–567 grams
Piston Pin Bore (Centerline-to-Piston Top)	1.599–1.603 in.	40.61–40.72 mm
Piston-to-Bore Clearance		0.033–0.053 mm
Preferred	0.0013–0.0021 in.	0.033–0.038 mm
Piston Ring Gap Clearance		
Compression Rings	0.010–0.020 in.	0.25–0.51 mm
Oil Control Steel Rails	0.015–0.055 in.	0.381–1.397 mm
Piston Ring Side Clearance		
Compression Rings	0.001–0.0032 in.	0.025–0.081 mm
Preferred	0.001 in.	0.025 mm
Oil Control Ring	0.001–0.0085 in.	0.025–0.216 mm
Preferred	0.003 in.	0.08 mm
Piston Ring Groove Height		
Compression Rings	0.0795–0.0805 in.	2.019–2.045 mm
Oil Control Ring	0.1880–0.1895 in.	4.78–4.80 mm
Piston Ring Groove Diameter		
Compression Rings	3.456–3.461 in.	87.78–87.90 mm
Oil Control Ring	3.445–3.455 in.	87.50–87.75 mm
Piston Pin Bore Diameter	0.9310–0.9313 in.	23.647–23.655 mm
Piston Pin Diameter	0.9306–0.9307 in.	23.637–23.640 mm
		0.010–0.015 mm
Piston-to-Pin Clearance	0.0004–0.0006 in.	0.015 mm—Loose
Preferred	0.0006 in.—Loose	
Piston-to-Pin Connecting Rod (Press Fit)	2000 lb f	8.9 kN
Oil Pump		
Gear-to-Body Clearance (Radial)		
Preferred	0.002–0.004 in.	0.051–0.102 mm
Preferred	0.002 in.	0.051 mm
Gear End Clearance		
Plastigage	0.002–0.006 in.	0.051–0.152 mm
Preferred	0.002 in.	0.051 mm
Feeler Gauge	0.004–0.008 in.	0.1016–0.2032 mm
Preferred	0.007 in.	0.1778 mm
Oil Pressure		
Min. Pressure (600 rpm)	13 psi	89.6 kPa
At Idle Speed (800 rpm)	25–35 psi	172–241 kPa
At 1600 rpm & higher	37–75 psi	255–517 kPa
Oil Pressure Relief	75 psi	517 kPa

85353C2B

ENGINE MECHANICAL SPECIFICATIONS
1993 2.5L Engine

Component	U.S.	Metric
Camshaft		
Hydraulic Tappet Clearance		Zero Lash
Bearing Clearance	0.001–0.003 in.	0.025–0.076 mm
Bearing Journal Diameter		
No. 1	2.029–2.030 in.	51.54–51.56 mm
No. 2	2.019–2.020 in.	51.28–51.31 mm
No. 3	2.009–2.010 in.	51.03–51.05 mm
No. 4	1.999–2.000 in.	50.78–50.80 mm
Base Circle Runout	0.001 in.—max.	0.03 mm—max.
Camshaft Lobe Lift	0.265 in.	6.731 mm
Valve Lift	0.424 in.	10.77 mm
Intake Valve Timing		
Opens		16°BTDC
Closes		74°ABDC
Exhaust Valve Timing		
Opens		60°BBDC
Closes		30°ATDC
Valve Overlap		46°
Intake Duration		270°
Exhaust Duration		270°
Crankshaft		
End Play	0.0015–0.0065 in.	0.038–0.165 mm
Main Bearing Journal Dia.	2.4996–2.5001 in.	63.489–63.502 mm
Main Bearing Journal Width		
No. 1	1.086–1.098 in.	27.58–27.89 mm
No. 2	1.271–1.273 in.	32.28–32.33 mm
Nos. 3–4–5	1.182–1.188 in.	30.02–30.18 mm
Main Bearing Clearance	0.001–0.0025 in.	0.051 mm
Preferred	0.002 in.	
Connecting Rod Journal Dia.	2.0934–2.0955 in.	53.17–53.23 mm
Connecting Rod Journal Width	1.070–1.076 in.	27.18–27.33 mm
Out-of-Round (Max. All Journals)	0.0005 in.	0.013 mm
Taper (Max. — All Journals)	0.0005 in.	0.013 mm
Cylinder Block		
Deck Height	9.320 in.	236.73 mm
Deck Clearance	0.000 in.	0.000 mm
Cylinder Bore Diameter		
Standard	3.8751–3.8775 in.	98.42–98.48 mm
Taper (Max.)	0.001 in.	0.025 mm
Out-of-Round (Max.)	0.001 in.	0.025 mm
Tappet Bore Diameter	0.9055–0.9065 in.	23.000–23.025 mm
Flatness	0.001 in. per 1 in.	0.03 mm per 25 mm
	0.002 in. per 6 in	0.05 mm per 152 mm
	0.008 in.—max. for total length	0.20 mm—max. for total length
Main Bearing Bore Dia.	2.691–2.692 in.	68.3514–68.3768 mm
Connecting Rods		
Total Weight (Less Bearing)	23.17–23.45 oz.	657–665 grams
Length (Center-to-Center)	6.123–6.127 in.	155.52–155.62 mm

85353C13

ENGINE MECHANICAL SPECIFICATIONS
1993 2.5L Engine

Component	U.S.	Metric
Piston Pin Bore Diameter	0.9288–0.9298 in.	23.59–23.62 mm
Bore (Less Bearings)	2.2080–2.2085 in.	56.08–56.09 mm
Bearing Clearance	0.001–0.003 in.	0.044–0.050 mm
Preferred	0.0015–0.0020 in.	
Side Clearance	0.010–0.019 in.	0.25–0.48 mm
Twist (Max.)	0.001 in. per in.	0.001 mm per mm
Bend (Max.)	0.001 in. per in.	0.001 mm per mm
Cylinder Compression Pressure		
Ratio		9.2:1
Pressure Range	120–150 psi	827–1034 kPa
Max. Variation Between Cylinders	30 psi	206 kPa
Cylinder Head		
Combustion Chamber	3.04–3.23 cu. in.	49.9–52.9 cc
Valve Guide I.D. (Integral)	0.313–0.314 in.	7.95–7.97 mm
Valve Stem-to-Guide Clearance	0.001–0.003 in.	0.025–0.076 mm
Intake Valve Seat Angle		44.5°
Exhaust Valve Seat Angle		44.5°
Valve Seat Width	0.040–0.060 in.	1.02–1.52 mm
Valve Seat Runout	0.0025 in.	0.064 mm
Flatness	0.001 in. per 1 in.	0.03 mm per 25 mm
	0.002 in. per 6 in.	0.05 mm per 152 mm
	0.008 in.—max. for total length	0.20 mm—max. for total length
Rocker Arms, Push Rods & Tappets		
Rocker Arm Ratio		1.6:1
Push Rod Length	9.500–9.520 in.	241.300–241.808 mm
Push Rod Diameter	0.312–0.315 in.	7.92–8.00 mm
Hydraulic Tappet Diameter	0.904–0.9045 in.	22.962–22.974 mm
Tappet-to-Bore Clearance	0.001–0.0025 in.	0.025–0.063 mm
Valves		
Length (Tip-to-Gauge Dimension Line)		
Intake	4.899–4.924 in.	124.435–125.070 mm
Exhaust	4.927–4.952 in.	125.120–125.755 mm
Valve Stem Diameter	0.311–0.312 in.	7.899–7.925 mm
Step-to-Guide Clearance	0.001–0.003 in.	0.025–0.076 mm
Valve Head Diameter		
Intake	1.905–1.915 in.	48.387–48.641 mm
Exhaust	1.495–1.505 in.	37.973–38.227 mm
Valve Face Angle		
Intake		45°
Exhaust		45°
Tip Refinishing (Max. Allowable)	0.010 in.	0.25 mm
Valve Springs		
Free Length (Approx.)	1.967 in.	49.962 mm
Spring Tension		
Valve Closed	80–90 lbf @ 1.640 in.	355–400 N @ 41.656 mm
Valve Open	200 lbf @ 1.216 in.	890 N @ 30.886 mm
Inside Diameter	0.948–0.968 in.	24.08–24.59 mm

85353C3A

ENGINE MECHANICAL SPECIFICATIONS
1993 2.5L Engine

Component	U.S.	Metric
Pistons		
Weight (Less Pin)	19.86–20.00 oz.	563–567 grams
Piston Pin Bore (Centerline-to-Piston Top)	1.599–1.603 in.	40.61–40.72 mm
Piston-to-Bore Clearance	0.0013–0.0021 in.	0.033–0.038 mm
Preferred	0.0013–0.0015 in.	
Piston Ring Gap Clearance		
Compression Rings	0.010–0.020 in.	0.25–0.51 mm
Oil Control Steel Rails	0.015–0.055 in.	0.381–1.397 mm
Piston Ring Side Clearance		
Compression Rings	0.001–0.0032 in.	0.025–0.081 mm
Preferred	0.001 in.	0.025 mm
Oil Control Ring	0.001–0.0085 in.	0.025–0.216 mm
Preferred	0.003 in.	0.08 mm
Piston Ring Groove Height		
Compression Rings	0.0795–0.0805 in.	2.019–2.045 mm
Oil Control Ring	0.1880–0.1895 in.	4.78–4.80 mm
Piston Ring Groove Diameter		
Compression Rings	3.456–3.461 in.	87.78–87.90 mm
Oil Control Ring	3.445–3.455 in.	87.50–87.75 mm
Piston Pin Bore Diameter	0.9310–0.9313 in.	23.647–23.655 mm
Piston Pin Diameter	0.9306–0.9307 in.	23.637–23.640 mm
Piston-to-Pin Clearance	0.0003–0.0007 in.	0.015 mm—Loose
Preferred	0.0006 in.—Loose	
Piston-to-Pin Connecting Rod (Press Fit)	2000 lb f	8.9 kN
Oil Pump		
Gear-to-Body Clearance (Radial)	0.002–0.004 in.	0.051–0.102 mm
Preferred	0.002 in.	0.051 mm
Gear End Clearance		
Plastigage	0.002–0.006 in.	0.051–0.152 mm
Preferred	0.002 in.	0.051 mm
Feeler Gauge	0.004–0.008 in.	0.1016–0.2032 mm
Preferred	0.007 in.	0.1778 mm
Oil Pressure		
Min. Pressure (600 rpm)	13 psi	89.6 kPa
At Idle Speed (800 rpm)	25–35 psi	172–241 kPa
At 1600 rpm & higher	37–75 psi	255–517 kPa
Oil Pressure Relief	75 psi	517 kPa

85353C38

ENGINE MECHANICAL SPECIFICATIONS
1994–95 2.5L Engine

Component	U.S.	Metric
Camshaft		
Hydraulic Tappet Clearance		Zero Lash
Bearing Clearance	0.001–0.003 in.	0.025–0.076 mm
Bearing Journal Diameter		
No. 1	2.029–2.030 in.	51.54–51.56 mm
No. 2	2.019–2.020 in.	51.28–51.31 mm
No. 3	2.009–2.010 in.	51.03–51.05 mm
No. 4	1.999–2.000 in.	50.78–50.80 mm
Base Circle Runout	0.001 in.—max.	0.03 mm—max.
Camshaft Lobe Lift	0.265 in.	6.731 mm
Valve Lift	0.424 in.	10.77 mm
Intake Valve Timing		
Opens		16°BTDC
Closes		74°ABDC
Exhaust Valve Timing		
Opens		60°BBDC
Closes		30°ATDC
Valve Overlap		46°
Intake Duration		270°
Exhaust Duration		270°
Crankshaft		
End Play	0.0015–0.0065 in.	0.038–0.165 mm
Main Bearing Journal Dia.	2.4996–2.5001 in.	63.489–63.502 mm
Main Bearing Journal Width		
No. 1	1.086–1.098 in.	27.58–27.89 mm
No. 2	1.271–1.273 in.	32.28–32.33 mm
Nos. 3–4–5	1.182–1.188 in.	30.02–30.18 mm
Main Bearing Clearance	0.001–0.0025 in.	0.03–0.06 mm
Preferred	0.002 in.	0.051 mm
Connecting Rod Journal Dia.	2.0934–2.0955 in.	53.17–53.23 mm
Connecting Rod Journal Width	1.070–1.076 in.	27.18–27.33 mm
Out-of-Round (Max. All Journals)	0.0005 in.	0.013 mm
Taper (Max. — All Journals)	0.0005 in.	0.013 mm
Cylinder Block		
Deck Height	9.320 in.	236.73 mm
Deck Clearance	0.000 in.	0.000 mm
Cylinder Bore Diameter		
Standard	3.8759–3.8775 in.	98.45–98.48 mm
Taper (Max.)	0.001 in.	0.025 mm
Out-of-Round (Max.)	0.001 in.	0.025 mm
Tappet Bore Diameter	0.9055–0.9065 in.	23.000–23.025 mm
Flatness	0.001 in. per 1 in.	0.03 mm per 25 mm
	0.002 in. per 6 in	0.05 mm per 152 mm
	0.008 in.—max. for total length	0.20 mm—max. for total length
Main Bearing Bore Dia.	2.691–2.692 in.	68.3514–68.3768 mm
Connecting Rods		
Total Weight (Less Bearing)	23.17–23.45 oz.	657–665 grams
Length (Center-to-Center)	6.123–6.127 in.	155.52–155.62 mm

85353C14

ENGINE MECHANICAL SPECIFICATIONS
1994–95 2.5L Engine

Component	U.S.	Metric
Piston Pin Bore Diameter	0.9288–0.9298 in.	23.59–23.62 mm
Bore (Less Bearings)	2.2080–2.2085 in.	56.08–56.09 mm
Bearing Clearance		0.025–0.076 mm
Preferred	0.001–0.003 in.	0.044–0.050 mm
Preferred	0.0015–0.0020 in.	
Side Clearance	0.010–0.019 in.	0.25–0.48 mm
Twist (Max.)	0.001 in. per in.	0.001 mm per mm
Bend (Max.)	0.001 in. per in.	0.001 mm per mm
Cylinder Compression Pressure		
Ratio		9.2:1
Pressure Range	120–150 psi	827–1034 kPa
Max. Variation Between Cylinders	30 psi	206 kPa
Cylinder Head		
Combustion Chamber	3.04–3.23 cu. in.	49.9–52.9 cc
Valve Guide I.D. (Integral)	0.313–0.314 in.	7.95–7.97 mm
Valve Stem-to-Guide Clearance	0.001–0.003 in.	0.025–0.076 mm
Intake Valve Seat Angle		44.5°
Exhaust Valve Seat Angle		44.5°
Valve Seat Width	0.040–0.060 in.	1.02–1.52 mm
Valve Seat Runout	0.0025 in.	0.064 mm
Flatness	0.001 in. per 1 in.	0.03 mm per 25 mm
	0.002 in. per 6 in.	0.05 mm per 152 mm
	0.008 in.—max. for total length	0.20 mm—max. for total length
Rocker Arms, Push Rods & Tappets		
Rocker Arm Ratio		1.6:1
Push Rod Length	9.500–9.520 in.	241.300–241.808 mm
Push Rod Diameter	0.312–0.315 in.	7.92–8.00 mm
Hydraulic Tappet Diameter	0.904–0.9045 in.	22.962–22.974 mm
Tappet-to-Bore Clearance	0.001–0.0025 in.	0.025–0.063 mm
Valves		
Length (Tip-to-Gauge Dimension Line)		
Intake	4.899–4.924 in.	124.435–125.070 mm
Exhaust	4.927–4.952 in.	125.120–125.755 mm
Valve Stem Diameter	0.311–0.312 in.	7.899–7.925 mm
Step-to-Guide Clearance	0.001–0.003 in.	0.025–0.076 mm
Valve Head Diameter		
Intake	1.905–1.915 in.	48.387–48.641 mm
Exhaust	1.495–1.505 in.	37.973–38.227 mm
Valve Face Angle		
Intake		45°
Exhaust		45°
Tip Refinishing (Max. Allowable)	0.010 in.	0.25 mm
Valve Springs		
Free Length (Approx.)	1.967 in.	49.962 mm
Spring Tension		
Valve Closed	81–89 lbf @ 1.640 in.	355–400 N @ 41.656 mm
Valve Open	200 lbf @ 1.216 in.	890 N @ 30.886 mm
Inside Diameter	0.948–0.968 in.	24.08–24.59 mm

85353C4A

ENGINE MECHANICAL SPECIFICATIONS
1994–95 2.5L Engine

Component	U.S.	Metric
Pistons		
Weight (Less Pin)	19.86–20.00 oz.	563–567 grams
Piston Pin Bore (Centerline-to-Piston Top)	1.599–1.603 in.	40.61–40.72 mm
Piston-to-Bore Clearance	0.0013–0.0021 in.	0.033–0.038 mm
Preferred	0.0013–0.0015 in.	
Piston Ring Gap Clearance		
Compression Rings	0.010–0.020 in.	0.25–0.51 mm
Oil Control Steel Rails	0.015–0.055 in.	0.381–1.397 mm
Piston Ring Side Clearance		
Compression Rings	0.001–0.0032 in.	0.025–0.081 mm
Preferred	0.001 in.	0.025 mm
Oil Control Ring	0.001–0.0085 in.	0.025–0.216 mm
Preferred	0.003 in.	0.08 mm
Piston Ring Groove Height		
Compression Rings	0.0795–0.0805 in.	2.019–2.045 mm
Oil Control Ring	0.1880–0.1895 in.	4.78–4.80 mm
Piston Ring Groove Diameter		
Compression Rings	3.456–3.461 in.	87.78–87.90 mm
Oil Control Ring	3.445–3.455 in.	87.50–87.75 mm
Piston Pin Bore Diameter	0.9310–0.9313 in.	23.647–23.655 mm
Piston Pin Diameter	0.9306–0.9307 in.	23.637–23.640 mm
Piston-to-Pin Clearance	0.0003–0.0007 in.	0.015 mm—Loose
Preferred	0.0006 in.—Loose	
Piston-to-Pin Connecting Rod (Press Fit)	2000 lb f	8.9 kN
Oil Pump		
Gear-to-Body Clearance (Radial)	0.002–0.004 in.	0.051–0.102 mm
Preferred	0.002 in.	0.051 mm
Gear End Clearance		
Plastigage	0.002–0.006 in.	0.051–0.152 mm
Preferred	0.002 in.	0.051 mm
Feeler Gauge	0.004–0.008 in.	0.1016–0.2032 mm
Preferred	0.007 in.	0.1778 mm
Oil Pressure		
Min. Pressure (600 rpm)	13 psi	89.6 kPa
At Idle Speed (800 rpm)	25–35 psi	172–241 kPa
At 1600 rpm & higher	37–75 psi	255–517 kPa
Oil Pressure Relief	75 psi	517 kPa

85353C4B

ENGINE MECHANICAL SPECIFICATIONS
1991 4.0L Engine

Component	U.S.	Metric
Camshaft		
Tappet Clearance	Zero Lash (Hydraulic tappets)	
End Play	Zero (engine operating)	
Bearing Clearance	0.001–0.003 in.	0.025–0.076 mm
Bearing Journal Diameter		
No. 1	2.029–2.030 in.	51.54–51.56 mm
No. 2	2.019–2.020 in.	51.28–51.31 mm
No. 3	2.009–2.010 in.	51.03–51.05 mm
No. 4	1.999–2.000 in.	50.78–50.80 mm
Base Circle Runout	0.001 in. (max)	0.003 mm (max)
Cam Lobe Lift	0.253 in.	6.43 mm
Valve Lift	0.405 in.	10.29 mm
Intake Valve Timing		
Opens	15° BTDC	
Closes	75° ABDC	
Exhaust Valve Timing		
Opens	59° BBDC	
Closes	31° ATDC	
Valve Overlap	46°	
Intake Duration	270°	
Exhaust Duration	270°	
Crankshaft		
End Play	0.0015–0.0065 in.	0.038–0.165 mm
Main Bearing Journal Diameter	2.4996–2.5001 in.	63.489–63.502 mm
Main Bearing Journal Width		
No. 1	1.086–1.098 in.	27.58–27.89 mm
No. 3	1.271–1.273 in.	32.28–32.33 mm
Nos. 2-4-5-6-7	1.182–1.188 in.	30.02–30.18 mm
Main Bearing Clearance	0.001–0.0025 in. (0.002 in. preferred)	0.03–0.06 mm (0.051 mm preferred)
Connecting Rod Journal Diameter	2.0934–2.0955 in.	53.17–53.23 mm
Connecting Rod Journal Width	1.070–1.076 in.	27.18–27.33 mm
Maximum Out-of-Round (All Journals)	0.005 in.	0.013 mm
Maximum Taper (All Journals)	0.005 in.	0.013 mm
Cylinder Block		
Deck Height	9.429–9.435 in.	239.49–239.64 mm
Deck Clearance (Below Block)	0.0215 in.	0.546 mm
Cylinder Bore Diameter		
(standard)	3.8751–3.8775 in.	98.42–98.48 mm
Maximum Taper	0.001 in.	0.025 mm
Maximum Out-of-Round	0.001 in.	0.025 mm
Tappet Bore Diameter	0.9055–0.9065 in.	23.000–23.025 mm
Cylinder Block Flatness	0.001/1–0.002/6 in. (0.008 in. max)	0.03/25–0.05/152 mm (0.20 mm max)
Connecting Rods		
Total Weight (less bearings)		657–665 grams
Total Length (center-to-center)	6.123–6.127 in.	155.52–155.62 mm
Piston Pin Bore Diameter	0.9288–0.9298 in.	23.59–23.62 mm
Connecting Rod Bore (less bearings)	2.2065–2.2080 in.	56.09–56.08 mm

85353C17

ENGINE MECHANICAL SPECIFICATIONS (Cont'd)
1991 4.0L Engine (Cont'd)

Component	U.S.	Metric
Connecting Rods		
Bearing Clearance	0.001–0.003 in. (0.0015–0.002 in. preferred)	0.03–0.08 mm (0.044–.05 mm preferred)
Side Clearance	0.010–0.019 in.	0.25–0.48 mm
Maximum Twist	0.001 in. per inch	0.001 mm per mm
Maximum Bend	0.0005 in. per inch	0.0005 mm per mm
Cylinder Head		
Combustion Chamber Volume	64.45–67.45 cc	
Valve Arrangement	EI-IE-IE-EI-EI-IE	
Valve Guide ID (Integral)	3.12 in.	7.9 mm
Valve Stem-to-Guide Clearance	0.001–0.003 in.	0.03–0.08 mm
Intake Valve Seat Angle	44.5°	
Exhaust Valve Seat Angle	44.5°	
Valve Seat Width	0.040–0.060 in.	1.02–1.52 mm
Valve Seat Runout	0.0025 in.	0.064 mm
Cylinder Head Flatness	0.001/1–0.002/6 in. (0.008 in. max)	0.03/25–0.05/152 mm (0.20 mm max)
Oil Pressure		
At Idle Speed (600 rpm)	13 psi	89.6 kPa
At 1600+ rpm	37–75 psi	255.1–517.1 kPa
Oil Pressure Relief	75 psi	517.1 kPa
Oil Pump		
Gear-to-Body Clearance (Radial)	0.002–0.004 in. (0.002 in. preferred)	0.051–0.102 mm (0.051 mm preferred)
Gear End Clearance, Plastigage	0.002–0.006 in. (0.002 in. preferred)	0.051–0.102 mm (0.051 mm preferred)
Gear End Clearance, Feeler Gauge	0.004–0.008 in. (0.007 in. preferred)	0.1016–0.2032 mm (0.1778 mm preferred)
Pistons		
Weight (less pin)	19.86–20.00 oz.	563–567 grams
Piston Pin Bore		
Centerline-to-Piston Top	1.599–1.603 in.	40.61–40.72 mm
Piston-to-Bore Clearance	0.0013–0.0021 in. (0.0013–0.0015 in. preferred)	0.033–0.053 mm (0.033–0.038 mm preferred)
Piston Ring Gap Clearance— Compression (both)	0.010–0.020 in.	0.25–0.51 mm
Piston Ring Gap Clearance— Oil Control Steel Rails	0.010–0.025 in.	0.25–0.64 mm
Piston Ring Side Clearance—		
No. 1 Compression	0.001–0.0032 in. (0.001 in. preferred)	0.025–0.081 mm (0.025 mm preferred)
No. 2 Compression	0.001–0.0032 in. (0.001 in. preferred)	0.025–0.081 mm (0.025 mm preferred)
Oil Control	0.001–0.0095 in. (0.003 in. preferred)	0.03–0.24 mm (0.08 mm preferred)
Piston Ring Groove Height		
Compression (both)	0.0795–0.0805 in.	2.019–2.045 mm
Oil Control	0.188–0.1895 in.	4.78–4.80 mm
Piston Ring Groove Diameter		
No. 1 and No. 2	3.476–3.486 in.	88.30–88.55 mm
Oil Control	3.557–3.566 in.	90.35–90.60 mm

85353C7A

ENGINE MECHANICAL SPECIFICATIONS (Cont'd)
1991 4.0L Engine (Cont'd)

Component	U.S.	Metric
Pistons		
Piston Pin Bore Diameter	0.9308–0.9313 in.	23.642–23.655 mm
Piston Pin Diameter	0.9304–0.9309 in.	23.632–23.645 mm
Piston-to-Pin Clearance	0.0004–0.0006 in. loose (0.0005 in. preferred)	0.010–0.015 mm loose (0.013 mm preferred)
Piston-to-Pin Connecting Rod	2000 lbf press-fit	8.9 kN press-fit
Rocker Arms, Push Rods and Tappets		
Rocker Arm Ratio	1.6:1	
Push Rod Length	9.640–9.660 in.	244.856–245.364 mm
Push Rod Diameter	0.312–0.315 in.	7.92–8.00 mm
Hydraulic Tappet Diameter	0.904–0.9045 in.	22.962–22.974 mm
Tappet-to-Bore Clearance	0.001–0.0025 in.	0.03–0.05 mm
Valves		
Valve Length (Tip-to-Gauge Dim. Line)		
(Intake)	4.822–4.837 in.	122.4–122.8 mm
(Exhaust)	4.837–4.852 in.	122.8–123.2 mm
Valve Stem Diameter	3.12 in.	7.9 mm
Stem-to-Guide Clearance	0.001–0.003 in.	0.03–0.08 mm
Intake Valve Head Diameter	1.91 in.	48.5 mm
Intake Valve Face Angle	45°	
Exhaust Valve Head Diameter	1.50 in.	38 mm
Exhaust Valve Face Angle	45°	
Maximum Allowable Removed for Tip Refinishing	0.010 in.	0.25 mm
Valve Springs		
Free Length	1.82 in. approx.	46.22 mm approx.
Spring Tension		
Valve Closed	66–74 lbf at 1.625	293–329 N at 41.2
Valve Open	205–220 lbf at 1.200	911–978 N at 30.4
Inside Diameter	0.948–0.968 in.	24.08–24.59 mm

85353C79

ENGINE MECHANICAL SPECIFICATIONS
1992–93 4.0L Engine

Component	U.S.	Metric
Camshaft		
Hydraulic Tappet Clearance	Zero Lash	
Bearing Clearance	0.001–0.003 in.	0.025–0.076 mm
Bearing Journal Diameter		
No. 1	2.029–2.030 in.	51.54–51.56 mm
No. 2	2.019–2.020 in.	51.28–51.31 mm
No. 3	2.009–2.010 in.	51.03–51.05 mm
No. 4	1.999–2.000 in.	50.78–50.80 mm
Base Circle Runout	0.001 in. (max)	0.003 mm (max)
Camshaft Lobe Lift	0.253 in.	6.43 mm
Valve Lift	0.405 in.	10.29 mm
Intake Valve Timing		
Opens	15° BTDC	
Closes	75° ABDC	
Exhaust Valve Timing		
Opens	59° BBDC	
Closes	31° ATDC	
Valve Overlap	46°	
Intake Duration	270°	
Exhaust Duration	270°	
Crankshaft		
End Play	0.0015–0.0065 in.	0.038–0.165 mm
Main Bearing Journal Diameter	2.4996–2.5001 in.	63.489–63.502 mm
Main Bearing Journal Width		
No. 1	1.086–1.098 in.	27.58–27.89 mm
No. 3	1.271–1.273 in.	32.28–32.33 mm
Nos. 2-4-5-6-7	1.182–1.188 in.	30.02–30.18 mm
Main Bearing Clearance	0.001–0.0025 in. (0.002 in. preferred)	0.03–0.06 mm (0.051 mm preferred)
Connecting Rod Journal Diameter	2.0934–2.0955 in.	53.17–53.23 mm
Connecting Rod Journal Width	1.070–1.076 in.	27.18–27.33 mm
Maximum Out-of-Round (All Journals)	0.005 in.	0.013 mm
Maximum Taper (All Journals)	0.005 in.	0.013 mm
Cylinder Block		
Deck Height	9.429–9.435 in.	239.49–239.64 mm
Deck Clearance (Below Block)	0.0215 in.	0.546 mm
Cylinder Bore Diameter		
(standard)	3.8751–3.8775 in.	98.42–98.48 mm
Maximum Taper	0.001 in.	0.025 mm
Maximum Out-of-Round	0.001 in.	0.025 mm
Tappet Bore Diameter	0.9055–0.9065 in.	23.000–23.025 mm
Flatness	0.001 in. per 1 in.	0.03 per 25 mm
	0.002 in per 6 in. (0.008 in. max for total length)	0.05 mm per 152 mm (0.20 mm max for total length)
Main Bearing Bore Diameter	2.691–2.692 in.	68.3514–68.3768 mm

85353C18

ENGINE MECHANICAL SPECIFICATIONS (Cont'd)
1992–93 4.0L Engine (Cont'd)

Component	U.S.		Metric
Connecting Rods			
Total Weight (less bearings)	23.17–23.45 oz.		657–665 grams
Total Length (center-to-center)	6.123–6.127 in.		155.52–155.62 mm
Piston Pin Bore Diameter	0.9288–0.9298 in.		23.59–23.62 mm
Connecting Rod Bore (less bearings)	2.2080–2.2085 in.		56.08–56.09 mm
Bearing Clearance	0.001–0.003 in.		0.025–0.076 mm
	(0.0015–0.0020 in. preferred)		(0.044–.050 mm preferred)
Side Clearance	0.010–0.019 in.		0.25–0.48 mm
Maximum Twist	0.001 in. per inch		0.001 mm per mm
Maximum Bend	0.0005 in. per inch		0.0005 mm per mm
Cylinder Compression Pressure			
Ratio		8.8:1	
Pressure Range	120–150 psi		827–1034 kPa
Max. Variation Between Cylinders	30 psi		206 kPa
Cylinder Head			
Combustion Chamber	3.93–4.12 cu. in.		64.45–67.45 cc
Valve Guide ID (Integral)	0.312 in.		7.9 mm
Valve Stem-to-Guide Clearance	0.001–0.003 in.		0.03–0.08 mm
Intake Valve Seat Angle		44.5°	
Exhaust Valve Seat Angle		44.5°	
Valve Seat Width	0.040–0.060 in.		1.02–1.52 mm
Valve Seat Runout	0.0025 in.		0.064 mm
Flatness	0.001 in. per 1 in.		0.03 per 25 mm
	0.002 in per 6 in.		0.05 mm per 152 mm
	(0.008 in. max for total length)		(0.20 mm max for total length)
Rocker Arms, Push Rods and Tappets			
Rocker Arm Ratio		1.6:1	
Push Rod Length	9.640–9.660 in.		244.856–245.364 mm
Push Rod Diameter	0.312–0.315 in.		7.92–8.00 mm
Hydraulic Tappet Diameter	0.904–0.9045 in.		22.962–22.974 mm
Tappet-to-Bore Clearance	0.001–0.0025 in.		0.03–0.05 mm
Valves			
Valve Length (Tip-to-Gauge Dimension. Line)			
(Intake)	4.822–4.837 in.		122.479–122.860 mm
(Exhaust)	4.837–4.852 in.		122.860–123.241 mm
Valve Stem Diameter	0.311–0.312 in.		7.899–7.925 mm
Stem-to-Guide Clearance	0.001–0.003 in.		0.025–0.076 mm
Valve Head Diameter			
Intake	1.905–1.915 in.		48.387–48.641 mm
Exhaust	1.495–1.505 in.		37.973–38.227 mm
Valve Face Angle			
Intake		45°	
Exhaust		45°	
Maximum Allowable Removed for Tip Refinishing	0.010 in.		0.25 mm

85353C8A

ENGINE MECHANICAL SPECIFICATIONS (Cont'd)
1992–93 4.0L Engine (Cont'd)

Component	U.S.	Metric
Valve Springs		
Free Length (approx.)	1.82 in.	46.22 mm
Spring Tension		
Valve Closed	66–74 lbf at 1.625	293–329 N at 41.275
Valve Open	205–220 lbf at 1.20	911–978 N at 30.48
Inside Diameter	0.948–0.968 in.	24.08–24.59 mm
Pistons		
Weight (less pin)	19.86–20.00 oz.	563–567 grams
Piston Pin Bore		
Centerline-to-Piston Top	1.599–1.603 in.	40.61–40.72 mm
Piston-to-Bore Clearance	0.0013–0.0021 in.	0.033–0.053 mm
	(0.0013–0.0015 in. preferred)	(0.033–0.038 mm preferred)
Piston Ring Gap Clearance—		
Compression Rings	0.010–0.020 in.	0.25–0.51 mm
Oil Control Steel Rails	0.010–0.025 in.	0.25–0.64 mm
Piston Ring Side Clearance—		
Compression Rings	0.001–0.0032 in.	0.025–0.081 mm
	(0.001 in. preferred)	(0.025 mm preferred)
Oil Control Ring	0.001–0.0095 in.	0.03–0.24 mm
	(0.003 in. preferred)	(0.08 mm preferred)
Piston Ring Groove Height		
Compression Rings	0.0795–0.0805 in.	2.019–2.045 mm
Oil Control Ring	0.188–0.1895 in.	4.78–4.80 mm
Piston Ring Groove Diameter		
Compression Rings	3.476–3.486 in.	88.30–88.55 mm
Oil Control Ring	3.557–3.566 in.	90.35–90.60 mm
Piston Pin Bore Diameter	0.9310–0.9313 in.	23.647–23.655 mm
Piston Pin Diameter	0.9306–0.9307 in.	23.637–23.640 mm
Piston-to-Pin Clearance	0.0003–0.0007 in. loose	0.0076–0.0179 mm loose
	(0.0005 in. preferred)	(0.013 mm preferred)
Piston-to-Pin Connecting Rod (press fit)	2000 lbf	8.9 kN
Oil Pump		
Gear-to-Body Clearance (Radial)	0.002–0.004 in.	0.051–0.102 mm
	(0.002 in. preferred)	(0.051 mm preferred)
Gear End Clearance		
Plastigage	0.002–0.006 in.	0.051–0.152 mm
	(0.002 in. preferred)	(0.051 mm preferred)
Gear End Clearance		
Feeler Gauge	0.004–0.008 in.	0.1016–0.2032 mm
	(0.007 in. preferred)	(0.1778 mm preferred)
Oil Pressure		
At Idle Speed (600 rpm)	13 psi	89.6 kPa
At 1600+ rpm	37–75 psi	255–517 kPa
Oil Pressure Relief	75 psi	517 kPa

85353C8B

ENGINE MECHANICAL SPECIFICATIONS
1994–95 4.0L Engine

Component	U.S.		Metric
Camshaft			
Hydraulic Tappet Clearance		Zero Lash	
Bearing Clearance	0.001–0.003 in.		0.025–0.076 mm
Bearing Journal Diameter			
No. 1	2.029–2.030 in.		51.54–51.56 mm
No. 2	2.019–2.020 in.		51.28–51.31 mm
No. 3	2.009–2.010 in.		51.03–51.05 mm
No. 4	1.999–2.000 in.		50.78–50.80 mm
Base Circle Runout	0.001 in. (max)		0.003 mm (max)
Cam Lobe Lift	0.253 in.		6.43 mm
Valve Lift	0.405 in.		10.29 mm
Intake Valve Timing			
Opens		15° BTDC	
Closes		75° ABDC	
Exhaust Valve Timing			
Opens		59° BBDC	
Closes		31° ATDC	
Valve Overlap		46°	
Intake Duration		270°	
Exhaust Duration		270°	
Crankshaft			
End Play	0.0015–0.0065 in.		0.038–0.165 mm
Main Bearing Journal Diameter			
No. 1–6	2.4996–2.5001 in.		63.489–63.502 mm
No. 7	2.4980–2.4995 in.		63.449–63.487 mm
Main Bearing Journal Width			
No. 1	1.086–1.098 in.		27.58–27.89 mm
No. 3	1.271–1.273 in.		32.28–32.33 mm
Nos. 2-4-5-6-7	1.182–1.188 in.		30.02–30.18 mm
Main Bearing Clearance	0.001–0.0025 in.		0.03–0.06 mm
	(0.002 in. preferred)		(0.051 mm preferred)
Connecting Rod Journal Diameter	2.0934–2.0955 in.		53.17–53.23 mm
Connecting Rod Journal Width	1.070–1.076 in.		27.18–27.33 mm
Maximum Out-of-Round (All Journals)	0.005 in.		0.013 mm
Maximum Taper (All Journals)	0.005 in.		0.013 mm
Cylinder Block			
Deck Height	9.450–9.456 in.		240.03–240.18 mm
Deck Clearance (Below Block)	0.0215 in.		0.546 mm
Cylinder Bore Diameter			
(standard)	3.8751–3.8775 in.		98.42–98.48 mm
Maximum Taper	0.001 in.		0.025 mm
Maximum Out-of-Round	0.001 in.		0.025 mm
Tappet Bore Diameter	0.9055–0.9065 in.		23.000–23.025 mm
Flatness	0.001 in. per 1 in.		0.03 per 25 mm
	0.002 in per 6 in.		0.05 mm per 152 mm
	(0.008 in. max for total length)		(0.20 mm max for total length)
Main Bearing Bore Diameter	2.691–2.692 in.		68.3514–68.3768 mm

85353C19

ENGINE MECHANICAL SPECIFICATIONS
1994–95 4.0L Engine

Component	U.S.		Metric
Connecting Rods			
Total Weight (less bearings)	23.17–23.45 oz.		657–665 grams
Total Length (center-to-center)	6.123–6.127 in.		155.52–155.62 mm
Piston Pin Bore Diameter	0.9288–0.9298 in.		23.59–23.62 mm
Connecting Rod Bore (less bearings)	2.2080–2.2085 in.		56.08–56.09 mm
Bearing Clearance	0.001–0.003 in.		0.03–0.08 mm
	(0.0015–0.0020 in. preferred)		(0.044–.050 mm preferred)
Side Clearance	0.010–0.019 in.		0.25–0.48 mm
Maximum Twist	0.001 in. per inch		0.001 mm per mm
Maximum Bend	0.0005 in. per inch		0.0005 mm per mm
Cylinder Compression Pressure			
Ratio		8.7:1	
Pressure Range	120–150 psi		827–1034 kPa
Max. Variation Between Cylinders	30 psi		206 kPa
Cylinder Head			
Combustion Chamber	3.37–3.55 cu. in.		55.22–58.22 cc
Valve Guide ID (Integral)	0.312 in.		7.9 mm
Valve Stem-to-Guide Clearance	0.001–0.003 in.		0.03–0.08 mm
Intake Valve Seat Angle		44.5°	
Exhaust Valve Seat Angle		44.5°	
Valve Seat Width	0.040–0.060 in.		1.02–1.52 mm
Valve Seat Runout	0.0025 in.		0.064 mm
Flatness	0.001 in. per 1 in.		0.03 per 25 mm
	0.002 in per 6 in.		0.05 mm per 152 mm
	(0.008 in. max for total length)		(0.20 mm max for total length)
Rocker Arms, Push Rods and Tappets			
Rocker Arm Ratio		1.6:1	
Push Rod Length	9.640–9.660 in.		244.856–245.364 mm
Push Rod Diameter	0.312–0.315 in.		7.92–8.00 mm
Hydraulic Tappet Diameter	0.904–0.9045 in.		22.962–22.974 mm
Tappet-to-Bore Clearance	0.001–0.0025 in.		0.03–0.05 mm
Valves			
Valve Length (Tip-to-Gauge Dimension. Line)			
(Intake)	4.822–4.837 in.		122.479–122.860 mm
(Exhaust)	4.837–4.852 in.		122.860–123.241 mm
Valve Stem Diameter	0.311–0.312 in.		7.899–7.925 mm
Stem-to-Guide Clearance	0.001–0.003 in.		0.025–0.076 mm
Valve Head Diameter			
Intake	1.905–1.915 in.		48.387–48.641 mm
Exhaust	1.495–1.505 in.		37.973–38.227 mm
Valve Face Angle			
Intake		45°	
Exhaust		45°	
Maximum Allowable Removed for Tip Refinishing	0.010 in.		0.25 mm

85353C9M

ENGINE MECHANICAL SPECIFICATIONS
1994–95 4.0L Engine

Component	U.S.	Metric
Valve Springs		
Free Length (approx.)	1.967 in.	49.962 mm
Spring Tension		
Valve Closed	81–89 lbf at 1.640 in.	360–396 N at 41.656 mm
Valve Open	190–210 lbf at 1.216 in.	845–934 N at 30.886 mm
Inside Diameter	0.948–0.968 in.	24.08–24.59 mm
Pistons		
Weight (less pin)	19.86–20.00 oz.	563–567 grams
Piston Pin Bore		
Centerline-to-Piston Top	1.599–1.603 in.	40.61–40.72 mm
Piston-to-Bore Clearance	0.0013–0.0021 in. (0.0013–0.0015 in. preferred)	0.033–0.053 mm (0.033–0.038 mm preferred)
Piston Ring Gap Clearance—		
Compression Rings	0.010–0.020 in.	0.25–0.51 mm
Oil Control Steel Rails	0.010–0.025 in.	0.25–0.64 mm
Piston Ring Side Clearance—		
Compression Rings	0.001–0.0032 in. (0.001 in. preferred)	0.025–0.081 mm (0.025 mm preferred)
Oil Control Ring	0.001–0.0095 in. (0.003 in. preferred)	0.03–0.24 mm (0.08 mm preferred)
Piston Ring Groove Height		
Compression Rings	0.0795–0.0805 in.	2.019–2.045 mm
Oil Control Ring	0.1880–0.1895 in.	4.78–4.80 mm
Piston Ring Groove Diameter		
Compression Rings	3.476–3.486 in.	88.30–88.55 mm
Oil Control Ring	3.557–3.566 in.	90.35–90.60 mm
Piston Pin Bore Diameter	0.9310–0.9313 in.	23.647–23.655 mm
Piston Pin Diameter	0.9306–0.9307 in.	23.637–23.640 mm
Piston-to-Pin Clearance	0.0003–0.0007 in. loose (0.0005 in. preferred)	0.0076–0.0179 mm loose (0.013 mm preferred)
Piston-to-Pin Connecting Rod (press fit)	2000 lbf	8.9 kN
Oil Pump		
Gear-to-Body Clearance (Radial)	0.002–0.004 in. (0.002 in. preferred)	0.051–0.102 mm (0.051 mm preferred)
Gear End Clearance Plastigage	0.002–0.006 in. (0.002 in. preferred)	0.051–0.152 mm (0.051 mm preferred)
Gear End Clearance Feeler Gauge	0.004–0.008 in. (0.007 in. preferred)	0.1016–0.2032 mm (0.1778 mm preferred)
Oil Pressure		
At Idle Speed (600 rpm)	13 psi	89.6 kPa
At 1600+ rpm	37–75 psi	255–517 kPa
Oil Pressure Relief	75 psi	517 kPa

85353C09N

ENGINE MECHANICAL SPECIFICATIONS
1987–89 4.2L Engine

Component	U.S.	Metric
Camshaft		
Tappet Clearance	Zero Lash (Hydraulic tappets)	
End Play	Zero (engine operating)	
Bearing Clearance	0.001–0.003 in.	0.025–0.076 mm
Bearing Journal Diameter		
No. 1	2.029–2.030 in.	51.54–51.56 mm
No. 2	2.019–2.020 in.	51.28–51.31 mm
No. 3	2.009–2.010 in.	51.03–51.05 mm
No. 4	1.999–2.000 in.	50.78–50.80 mm
Base Circle Runout	0.001 in. (max)	0.003 mm (max)
Cam Lobe Lift	0.253 in.	6.43 mm
Valve Lift	0.405 in.	10.29 mm
Intake Valve Timing		
Opens	9° BTDC	
Closes	73° ABDC	
Exhaust Valve Timing		
Opens	57° BBDC	
Closes	25° ATDC	
Valve Overlap	34°	
Intake Duration	262°	
Exhaust Duration	262°	
Connecting Rods		
Total Weight (less bearings)	24.5–24.9 oz.	695–703 grams
Total Length (center-to-center)	5.873–5.877 in.	149.17–149.28 mm
Piston Pin Bore Diameter	0.9288–0.9298 in.	23.59–23.62 mm
Connecting Rod Bore (less bearings)	2.2080–2.2085 in.	56.08–56.09 mm
Bearing Clearance	0.001–0.0025 in. (0.0015–0.0020 in. preferred)	0.03–0.08 mm (0.044–0.050 mm preferred)
Side Clearance	0.010–0.019 in.	0.25–0.48 mm
Maximum Twist	0.001 in. per inch	0.025 per 25.4 mm
Maximum Bend	0.005 in. per inch	0.0127 per 25.4 mm
Crankshaft		
End Play	0.0015–0.0065 in.	0.038–0.165 mm
Main Bearing Journal Diameter	2.4996–2.5001 in.	63.489–63.502 mm
Main Bearing Journal Width		
No. 1	1.086–1.098 in.	27.58–27.89 mm
No. 2	1.271–1.273 in.	32.28–32.33 mm
Nos. 3-4-5-6-7	1.182–1.188 in.	30.02–30.18 mm
Main Bearing Clearance	0.001–0.0025 in. (0.002 in. preferred)	0.03–0.06 mm (0.051 mm preferred)
Connecting Rod Journal Diameter	2.0934–2.0955 in.	53.17–53.23 mm
Connecting Rod Journal Width	1.070–1.076 in.	27.18–27.33 mm
Maximum Out-of-Round (All Journals)	0.005 in.	0.013 mm
Maximum Taper (All Journals)	0.005 in.	0.013 mm
Cylinder Block		
Deck Height	9.487–9.493 in.	240.97–241.12 mm
Deck Clearance (below deck)	0.0148 in.	0.376 mm
Cylinder Bore Diameter (standard)	3.7501–3.7533 in.	95.253–95.334 mm
Maximum Taper	0.001 in.	0.025 mm
Maximum Out-of-Round	0.001 in.	0.025 mm

85353C15

ENGINE MECHANICAL SPECIFICATIONS (Cont'd)
1987–89 4.2L Engine (Cont'd)

Component	U.S.	Metric
Cylinder Block		
Tappet Bore Diameter	0.9055–0.9065 in.	23.000–23.025 mm
Cylinder Block Flatness	.001 per 1 in. .002 per 6 in.	.03 per 25 mm .05 per 152 mm
Main Bearing Bore Diameter	2.691–2.692 in.	68.35–68.38 mm
Cylinder Head		
Combustion Chamber Volume	64.45–67.45 cc	
Valve Arrangement	EI-IE-IE-EI-EI-IE	
Valve Guide ID (Integral)	0.3735–0.3745 in.	9.487–9.512 mm
Valve Stem-to-Guide Clearance	.001–.003 in.	0.03–0.08 mm
Intake Valve Seat Angle	30°	
Exhaust Valve Seat Angle	44°30'	
Valve Seat Width	0.040–0.060 in.	1.02–1.52 mm
Valve Seat Runout	0.0025 in.	0.064 mm
Cylinder Head Flatness	.001 per 1 in. .002 per 6 in.	.03 per 25 mm .05 per 152 mm
Oil Pressure		
At Idle Speed (600 rpm)	13 psi	90 kPa
At 1600+ rpm	37–75 psi	255–517 kPa
Oil Pressure Relief	75 psi	517 kPa
Oil Pump		
Gear-to-Body Clearance (Radial)	0.002–0.004 in. (0.002 in. preferred)	0.051–0.102 mm (0.051 mm preferred)
Gear End Clearance, Plastigage	0.002–0.006 in. (0.002 in. preferred)	0.051–0.152 mm (0.051 mm preferred)
Gear End Clearance, Feeler Gauge	0.004–0.008 in. (0.007 in. preferred)	0.1016–0.2032 mm (0.1778 mm preferred)
Rocker Arms, Push Rods and Tappets		
Rocker Arm Ratio	1.6:1	
Push Rod Length	9.640–9.660 in.	244.856–245.364 mm
Push Rod Diameter	0.312–0.315 in.	7.92–8.00 mm
Hydraulic Tappet Diameter	0.904–0.9045 in.	22.962–22.974 mm
Tappet-to-Bore Clearance	0.001–0.0025 in.	0.03–0.05 mm
Pistons		
Weight (less pin)	18–18.1 oz.	510–514 grams
Piston Pin Bore		
Centerline-to-Piston Top	1.651–1.655 in.	41.94–42.04 mm
Piston-to-Bore Clearance	0.0009–0.0017 in. (0.0012–0.0013 in. preferred)	0.023–0.043 mm (0.030–0.033 mm preferred)
Piston Ring Gap Clearance—		
Compression (both)	0.010–0.020 in.	0.25–0.51 mm
Piston Ring Gap Clearance—		
Oil Control Steel Rails	0.010–0.025 in.	0.25–0.64 mm
Piston Ring Side Clearance—		
No. 1 and No. 2 Compression	0.0017–0.0032 in. (0.017 in. preferred)	0.043–0.081 mm (0.043 mm preferred)
Oil Control	0.0080 in. (0.003 in. preferred)	0.03–0.20 mm (0.08 mm preferred)

85353C5A

ENGINE MECHANICAL SPECIFICATIONS (Cont'd)
1987–89 4.2L Engine (Cont'd)

Component	U.S.	Metric
Pistons		
Piston Ring Groove Height		
Compression (both)	0.0795–0.0805 in.	2.019–2.045 mm
Oil Control	0.188–0.1895 in.	4.78–4.80 mm
Piston Ring Groove Diameter		
No. 1 and No. 2	3.324–3.329 in.	84.43–84.56 mm
Oil Control	3.329–3.339 in.	84.56–84.81 mm
Piston Pin Bore Diameter	0.9308–0.9313 in.	23.624–23.655 mm
Piston Pin Diameter	0.9304–0.9309 in.	23.632–23.645 mm
Piston-to-Pin Clearance	0.0003–0.0005 in. loose (0.0005 in. preferred)	0.008–0.013 mm loose (0.013 mm preferred)
Piston-to-Pin Connecting Rod	2000 lbf press-fit	8.9 kN press-fit
Valves		
Valve Length (Tip-to-Gauge Dim. Line) (Intake)	4.7895–4.8045 in.	121.653–122.034 mm
Valve Stem Diameter	0.3715–0.3725 in.	9.436–9.462 mm
Stem-to-Guide Clearance	.001–.003 in.	0.03–0.08 mm
Intake Valve Head Diameter	1.782–1.792 in.	45.26–45.52 mm
Intake Valve Face Angle	29°	
Exhaust Valve Head Diameter	1.401–1.411 in.	35.59–35.84 mm
Exhaust Valve Face Angle	44°	
Maximum Allowable Removed for Tip Refinishing	0.010 in.	0.25 mm
Valve Springs Free Length	1.99 in.	50.55 mm
Valve Spring Tension Closed	64.72 lbs at 1.786 in.	285–320 N at 45.4 mm
Valve Spring Tension Open	188–202 lbs at 1.411 in.	836–898 N at 35.84 mm

85353C5B

ENGINE MECHANICAL SPECIFICATIONS
1990 4.2L Engine

Component	U.S.	Metric
Camshaft		
Tappet Clearance	Zero Lash (Hydraulic tappets)	
End Play	Zero (engine operating)	
Bearing Clearance	0.001–0.003 in.	0.025–0.076 mm
Bearing Journal Diameter		
No. 1	2.029–2.030 in.	51.54–51.56 mm
No. 2	2.019–2.020 in.	51.28–51.31 mm
No. 3	2.009–2.010 in.	51.03–51.05 mm
No. 4	1.999–2.000 in.	50.78–50.80 mm
Base Circle Runout	0.001 in. (max)	0.003 mm (max)
Cam Lobe Lift	0.253 in.	6.43 mm
Valve Lift	0.405 in.	10.29 mm
Intake Valve Timing		
Opens	9° BTDC	
Closes	73° ABDC	
Exhaust Valve Timing		
Opens	57° BBDC	
Closes	25° ATDC	
Valve Overlap	34°	
Intake Duration	262°	
Exhaust Duration	262°	
Connecting Rods		
Total Weight (less bearings)	24.5–24.9 oz.	695–703 grams
Total Length (center-to-center)	5.873–5.877 in.	149.17–149.28 mm
Piston Pin Bore Diameter	0.9288–0.9298 in.	23.59–23.62 mm
Connecting Rod Bore (less bearings)	2.2080–2.2085 in.	56.08–56.09 mm
Bearing Clearance	0.001–0.0025 in. (0.0015–0.0020 in. preferred)	0.03–0.08 mm (0.044–0.050 mm preferred)
Side Clearance	0.010–0.019 in.	0.25–0.48 mm
Maximum Twist	0.001 in. per inch	0.025 per 25.4 mm
Maximum Bend	0.005 in. per inch	0.0127 per 25.4 mm
Crankshaft		
End Play	0.0015–0.0065 in.	0.038–0.165 mm
Main Bearing Journal Diameter	2.4996–2.5001 in.	63.489–63.502 mm
Main Bearing Journal Width		
No. 1	1.086–1.098 in.	27.58–27.89 mm
No. 2	1.271–1.273 in.	32.28–32.33 mm
No. 3-4-5-6-7	1.182–1.188 in.	30.02–30.18 mm
Main Bearing Clearance	0.001–0.0025 in. (0.002 in. preferred)	0.03–0.06 mm (0.051 mm preferred)
Connecting Rod Journal Diameter	2.0934–2.0955 in.	53.17–53.23 mm
Connecting Rod Journal Width	1.070–1.076 in.	27.18–27.33 mm
Maximum Out-of-Round (All Journals)	0.005 in.	0.013 mm
Maximum Taper (All Journals)	0.005 in.	0.013 mm
Cylinder Block		
Deck Height	9.487–9.493 in.	240.97–241.12 mm
Deck Clearance (below deck)	0.0148 in.	0.376 mm
Cylinder Bore Diameter		
(standard)	3.7501–3.7533 in.	95.253–95.334 mm
Maximum Taper	0.001 in.	0.025 mm
Maximum Out-of-Round	0.001 in.	0.025 mm

85353C16

ENGINE MECHANICAL SPECIFICATIONS (Cont'd)
1990 4.2L Engine (Cont'd)

Component	U.S.	Metric
Cylinder Block		
Tappet Bore Diameter	0.9055–0.9065 in.	23.000–23.025 mm
Cylinder Block Flatness	.001 per 1 in. .002 per 6 in.	.03 per 25 mm .05 per 152 mm
Main Bearing Bore Diameter	2.691–2.692 in.	68.35–68.38 mm
Cylinder Head		
Combustion Chamber Volume	64.45–67.45 cc	
Valve Arrangement	EI-IE-IE-EI-EI-IE	
Valve Guide ID (Integral)	0.3735–0.3745 in.	9.487–9.512 mm
Valve Stem-to-Guide Clearance	.001–.003 in.	0.03–0.08 mm
Intake Valve Seat Angle	30°	
Exhaust Valve Seat Angle	44°30'	
Valve Seat Width	0.040–0.060 in.	1.02–1.52 mm
Valve Seat Runout	0.0025 in.	0.064 mm
Cylinder Head Flatness	.001 per 1 in. .002 per 6 in.	.03 per 25 mm .05 per 152 mm
Oil Pressure		
At Idle Speed (600 rpm)	13 psi	90 kPa
At 1600+ rpm	37–75 psi	255–517 kPa
Oil Pressure Relief	75 psi	517 kPa
Oil Pump		
Gear-to-Body Clearance (Radial)	0.002–0.004 in. (0.002 in. preferred)	0.051–0.102 mm (0.051 mm preferred)
Gear End Clearance, Plastigage	0.002–0.006 in. (0.002 in. preferred)	0.051–0.152 mm (0.051 mm preferred)
Gear End Clearance, Feeler Gauge	0.004–0.008 in. (0.007 in. preferred)	0.1016–0.2032 mm (0.1778 mm preferred)
Rocker Arms, Push Rods and Tappets		
Rocker Arm Ratio	1.6:1	
Push Rod Length	9.640–9.660 in.	244.856–245.364 mm
Push Rod Diameter	0.312–0.315 in.	7.92–8.00 mm
Hydraulic Tappet Diameter	0.904–0.9045 in.	22.962–22.974 mm
Tappet-to-Bore Clearance	0.001–0.0025 in.	0.03–0.05 mm
Pistons		
Weight (less pin)	18–18.1 oz.	510–514 grams
Piston Pin Bore		
Centerline-to-Piston Top	1.651–1.655 in.	41.94–42.04 mm
Piston-to-Bore Clearance	0.0009–0.0017 in. (0.0012–0.0013 in. preferred)	0.023–0.043 mm (0.030–0.033 mm preferred)
Piston Ring Gap Clearance— Compression (both)	0.010–0.020 in.	0.25–0.51 mm
Piston Ring Gap Clearance— Oil Control Steel Rails	0.010–0.025 in.	0.25–0.64 mm
Piston Ring Side Clearance—		
No. 1 and No. 2 Compression	0.0012–0.0032 in. (0.017 in. preferred)	0.030–0.081 mm (0.043 mm preferred)
Oil Control	0.0080 in. (0.003 in. preferred)	0.03–0.20 mm (0.08 mm preferred)
Piston Ring Groove Height		
Compression (both)	0.0795–0.0805 in.	2.019–2.045 mm
Oil Control	0.188–0.1895 in.	4.78–4.80 mm

85353C6A

ENGINE MECHANICAL SPECIFICATIONS (Cont'd)
1990 4.2L Engine (Cont'd)

Pistons			
Piston Ring Groove Diameter			
No. 1 and No. 2	3.324–3.329 in.		84.43–84.56 mm
Oil Control	3.329–3.339 in.		84.56–84.81 mm
Piston Pin Bore Diameter	0.9308–0.9313 in.		23.624–23.655 mm
Piston Pin Diameter	0.9304–0.9309 in.		23.632–23.645 mm
Piston-to-Pin Clearance	0.0004–0.0006 in. loose (0.0006 in. preferred)		0.010–0.015 mm loose (0.015 mm preferred)
Piston-to-Pin Connecting Rod	2000 lbf press-fit		8.9 kN press-fit
Valves			
Valve Length (Tip-to-Gauge Dim. Line) (Intake)	4.7895–4.8045 in.		121.653–122.034 mm
Valve Stem Diameter	0.3715–0.3725 in.		9.436–9.462 mm
Stem-to-Guide Clearance	.001–.003 in.		0.03–0.08 mm
Intake Valve Head Diameter	1.782–1.792 in.		45.26–45.52 mm
Intake Valve Face Angle		29°	
Exhaust Valve Head Diameter	1.401–1.411 in.		35.59–35.84 mm
Exhaust Valve Face Angle		44°	
Maximum Allowable Removed for Tip Refinishing	0.010 in.		0.25 mm
Valve Springs Free Length	1.99 in.		50.55 mm
Valve Spring Tension Closed	64.72 lbs at 1.786 in.		285–320 N at 45.4 mm
Valve Spring Tension Open	188–202 lbs at 1.411 in.		836–898 N at 35.84 mm

85353C6B

TORQUE SPECIFICATIONS
1987–89 2.5L Engine

Component	U.S.	Metric
A/C Bracket-to-Block/Head Bolts	30 ft. lbs.	40 Nm
A/C Compressor-to-Bracket Bolts	20 ft. lbs.	27 Nm
Alternator Adjusting Bolt	20 ft. lbs.	27 Nm
Alternator Pivot Bolt/Nut	28 ft. lbs.	38 Nm
Alternator Mounting Bracket-to-Engine Bolts	28 ft. lbs.	38 Nm
Alternator Mounting-to-Head Bolts	33 ft. lbs.	45 Nm
Block Heater Nut	16 in. lbs.	1.8 Nm
Camshaft Sprocket Bolt	80 ft. lbs.	108 Nm
Connecting Rod Bolt Nuts	33 ft. lbs.	45 Nm
Crankshaft Main Bearing Bolts	80 ft. lbs.	108 Nm
Crankshaft Pulley-to-Damper Nut	20 ft. lbs.	27 Nm
Crossmember-to-Sill—Front Bolts	65 ft. lbs.	88 Nm
—Rear Nuts	30 ft. lbs.	41 Nm
Cylinder Block Oil Galley Plugs	30 ft. lbs.	41 Nm
Cylinder Head Bolts (#1–7 & #9–10)	110 ft. lbs.	149 Nm
(#8)	100 ft. lbs.	136 Nm
Cylinder Head Cover Bolts	44 in. lbs.	5 Nm
Drive Plate-to-Torque Converter Bolts	40 ft. lbs.	54 Nm
Engine Shock Damper Stud Nut	17 ft. lbs.	23 Nm
Exhaust Manifold-to-Downpipe Nuts	23 ft. lbs.	31 Nm
Front Support Bracket-to-Cylinder Block	45 ft. lbs.	61 Nm
Front Support Cushion-to-Mount (Thru Bolt)	48 ft. lbs.	65 Nm
Front Support Cushion-to-Sill Bracket	30 ft. lbs.	40 Nm
Fuel Pump Bolts	16 ft. lbs.	22 Nm
Oil Pan Bolts—1/4-20	7 ft. lbs.	9 Nm
—5/16-18	11 ft. lbs.	15 Nm
Oil Pan Drain Plug	25 ft. lbs.	34 Nm
Oil Pan-to-Timing Case Cover Bolts	11 ft. lbs.	13 Nm
Oil Pump Attaching Bolts (Short)	10 ft. lbs.	14 Nm
Oil Pump Attaching Bolts (Long)	17 ft. lbs.	23 Nm
Oil Pump Cover Bolts	70 in. lbs.	8 Nm
Power Steering Pump Pressure Hose Nut	38 ft. lbs.	52 Nm
Rear Support Cushion-to-Bracket Bolts	32 ft. lbs.	43 Nm
Rocker Arm Assembly-to-Cylinder Head	19 ft. lbs.	26 Nm
Starting Motor-to-Cylinder Block Bolts	33 ft. lbs.	45 Nm
Timing Case Cover-to-Block Bolts	62 in. lbs.	7 Nm
Vibration Damper Bolt (Lubricated)	80 ft. lbs.	108 Nm

85353C20

TORQUE SPECIFICATIONS
1990–91 2.5L Engine

Component	U.S.	Metric
A/C Bracket-to-Block/Head Bolts	30 ft. lbs.	40 Nm
A/C Compressor-to-Bracket Bolts	20 ft. lbs.	27 Nm
Alternator Adjusting Bolt	20 ft. lbs.	27 Nm
Alternator Pivot Bolt/Nut	28 ft. lbs.	38 Nm
Alternator Mounting Bracket-to-Engine Bolts	28 ft. lbs.	38 Nm
Alternator Mounting-to-Head Bolts	33 ft. lbs.	45 Nm
Block Heater Nut	16 in. lbs.	1.8 Nm
Camshaft Sprocket Bolt	80 ft. lbs.	108 Nm
Connecting Rod Bolt Nuts	33 ft. lbs.	45 Nm
Converter Plate Bolts	50 ft. lbs. + 60°	68 Nm + 60°
Crankshaft Main Bearing Bolts	80 ft. lbs.	108 Nm
Crankshaft Pulley-to-Damper Nut	20 ft. lbs.	27 Nm
Crossmember-to-Sill—Front Bolts	65 ft. lbs.	88 Nm
—Rear Nuts	30 ft. lbs.	41 Nm
Cylinder Block Oil Galley Plugs	30 ft. lbs.	41 Nm
Cylinder Head Bolts (#1–7 & #9–10)	110 ft. lbs.	149 Nm
(#8)	100 ft. lbs.	136 Nm
Cylinder Head Cover Bolts	70 in. lbs.	8 Nm
Drive Plate-to-Torque Converter Bolts	40 ft. lbs.	54 Nm
Engine Shock Damper Stud Nut	17 ft. lbs.	23 Nm
Exhaust Manifold-to-Downpipe Nuts	23 ft. lbs.	31 Nm
Flywheel Bolts	50 ft. lbs. + 60°	68 Nm + 60°
Front Support Bracket-to-Cylinder Block	45 ft. lbs.	61 Nm
Front Support Cushion-to-Mount (Thru Bolt)	48 ft. lbs.	65 Nm
Front Support Cushion-to-Sill Bracket	30 ft. lbs.	40 Nm
Fuel Pump Bolts	16 ft. lbs.	22 Nm
Oil Pan Bolts—1/4-20	7 ft. lbs.	9 Nm
—5/16-18	11 ft. lbs.	15 Nm
Oil Pan Drain Plug	25 ft. lbs.	34 Nm
Oil Pan-to-Timing Case Cover Bolts	11 ft. lbs.	13 Nm
Oil Pump Attaching Bolts (Short)	10 ft. lbs.	14 Nm
Oil Pump Attaching Bolts (Long)	17 ft. lbs.	23 Nm
Oil Pump Cover Bolts	70 in. lbs.	8 Nm
Power Steering Pump Pressure Hose Nut	38 ft. lbs.	52 Nm
Rear Support Cushion-to-Bracket Bolts	32 ft. lbs.	43 Nm
Rocker Arm Assembly-to-Cylinder Head	19 ft. lbs.	26 Nm
Spark Plugs	27 ft. lbs.	37 Nm
Starting Motor-to-Cylinder Block Bolts	33 ft. lbs.	45 Nm
Timing Case Cover-to-Block Bolts	62 in. lbs.	7 Nm
Vibration Damper Bolt (Lubricated)	80 ft. lbs.	108 Nm

85353C21

TORQUE SPECIFICATIONS
1992 2.5L Engine

Component	U.S.	Metric
A/C Compressor Bracket-to-Engine Bolts	25 ft. lbs.	34 Nm
A/C Compressor Mounting Bolts	20 ft. lbs.	27 Nm
A/C Low Pressure Service Valve Nut	28 ft. lbs.	38 Nm
Alternator Adjusting Bolt	18 ft. lbs.	24 Nm
Alternator Pivot Bolt/Nut	28 ft. lbs.	38 Nm
Alternator Mounting Bracket-to-Engine Bolts	28 ft. lbs.	38 Nm
Alternator Mounting-to-Head Bolts	33 ft. lbs.	45 Nm
Block Heater Nut	16 in. lbs.	1.8 Nm
Camshaft Sprocket Bolt	80 ft. lbs.	108 Nm
Connecting Rod Nuts	33 ft. lbs.	45 Nm
Converter Plate Bolts	50 ft. lbs. + 60°	68 Nm + 60°
Cylinder Head Bolts (#1–10 & #12–14)	110 ft. lbs.	149 Nm
(#11)	100 ft. lbs.	135 Nm
Cylinder Head Cover Bolts	85 in. lbs.	10 Nm
Driver Plate-to-Torque Converter Bolts	40 ft. lbs.	54 Nm
Engine Shock Damper Stud Nuts	17 ft. lbs.	23 Nm
Engine Support Bracket Bolts	45 ft. lbs.	61 Nm
Exhaust Manifold-to-Pipe Nuts	20 ft. lbs.	27 Nm
Flywheel/Converter Housing Bolts	28 ft. lbs.	38 Nm
Front Cover-to-Block Bolts	60 in. lbs.	7 Nm
Front Support Bracket-to-Cylinder Block Bolts	45 ft. lbs.	61 Nm
Front Support Cushion-to-Mount Thru Bolt	48 ft. lbs.	65 Nm
Front Support Cushion-to-Sill Bracket	48 ft. lbs.	65 Nm
Fuel Pump Bolts	16 ft. lbs.	22 Nm
Main Bearing Bolts	80 ft. lbs.	108 Nm
Oil Filter	13 ft. lbs.	18 Nm
Oil Galley Plug	30 ft. lbs.	41 Nm
Oil Pan Bolts (1/4-20)	114 in. lbs.	13 Nm
(5/16-18)	156 in. lbs.	18 Nm
Oil Pan Drain Plug	30 ft. lbs.	41 Nm
Oil Pump Attaching Bolts (Short Bolts)	10 ft. lbs.	14 Nm
(Long Bolts)	17 ft. lbs.	23 Nm
Oil Pan Cover Bolts	70 in. lbs.	8 Nm
Power Steering Pump Pressure Hose Nut	38 ft. lbs.	52 Nm
Rear Support Bracket-to-Transmission Bolts	41 ft. lbs.	56 Nm
Rocker Arm Assembly-to-Cylinder Head Capscrews	21 ft. lbs.	28 Nm
Skid Plate-to-Sill Bolts	65 ft. lbs.	88 Nm
Spark Plugs	27 ft. lbs.	37 Nm
Starting Motor Mounting Bolts	33 ft. lbs.	45 Nm
Timing Case Cover-to-Block Bolts	60 in. lbs.	7 Nm
Transmission Support Cushion Nuts	41 ft. lbs.	56 Nm
Trans. Support Cushion/Torque Arm Bracket Bolts	41 ft. lbs.	56 Nm
Vibration Damper Bolts	80 ft. lbs.	108 Nm

85353C22

TORQUE SPECIFICATIONS
1993 2.5L Engine

Component	U.S.	Metric
A/C Compressor Bracket-to-Engine Bolts	25 ft. lbs.	34 Nm
A/C Compressor Mounting Bolts	20 ft. lbs.	27 Nm
A/C Low Pressure Service Valve Nut	28 ft. lbs.	38 Nm
Block Heater Nut	16 in. lbs.	1.8 Nm
Camshaft Sprocket Bolt	80 ft. lbs.	108 Nm
Connecting Rod Nuts	33 ft. lbs.	45 Nm
Converter Plate Bolts	50 ft. lbs. + 60°	68 Nm + 60°
Cylinder Head Bolts (#1–6 & #8–10)	110 ft. lbs.	149 Nm
(#7)	100 ft. lbs.	135 Nm
Cylinder Head Cover Bolts	75 in. lbs.	9 Nm
Driver Plate-to-Torque Converter Bolts	40 ft. lbs.	54 Nm
Engine Shock Damper Stud Nuts	17 ft. lbs.	23 Nm
Engine Support Bracket Bolts	45 ft. lbs.	61 Nm
Exhaust Manifold-to-Pipe Nuts	20 ft. lbs.	27 Nm
Flywheel/Converter Housing Bolts	28 ft. lbs.	38 Nm
Front Cover-to-Block Bolts	60 in. lbs.	7 Nm
Front Support Bracket-to-Cylinder Block Bolts	45 ft. lbs.	61 Nm
Front Support Cushion-to-Mount Thru Bolt	48 ft. lbs.	65 Nm
Front Support Cushion-to-Sill Bracket	48 ft. lbs.	65 Nm
Fuel Pump Bolts	16 ft. lbs.	22 Nm
Generator Adjusting Bolt	18 ft. lbs.	24 Nm
Generator Pivot Bolt/Nut	28 ft. lbs.	38 Nm
Generator Mounting Bracket-to-Engine Bolts	28 ft. lbs.	38 Nm
Generator Mounting-to-Head Bolts	33 ft. lbs.	45 Nm
Main Bearing Bolts	80 ft. lbs.	108 Nm
Oil Filter	13 ft. lbs.	18 Nm
Oil Galley Plug	30 ft. lbs.	41 Nm
Oil Pan Bolts (1/4-20)	114 in. lbs.	13 Nm
(5/16-18)	156 in. lbs.	18 Nm
Oil Pan Drain Plug	30 ft. lbs.	41 Nm
Oil Pump Attaching Bolts (Short Bolts)	10 ft. lbs.	14 Nm
(Long Bolts)	17 ft. lbs.	23 Nm
Oil Pan Cover Bolts	70 in. lbs.	8 Nm
Power Steering Pump Pressure Hose Nut	38 ft. lbs.	52 Nm
Rear Support Bracket-to-Transmission Bolts	41 ft. lbs.	56 Nm
Rocker Arm Assembly-to-Cylinder Head Capscrews	21 ft. lbs.	28 Nm
Skid Plate-to-Sill Bolts	65 ft. lbs.	88 Nm
Spark Plugs	27 ft. lbs.	37 Nm
Starting Motor Mounting Bolts	33 ft. lbs.	45 Nm
Timing Case Cover-to-Block Bolts	60 in. lbs.	7 Nm
Transmission Support Cushion Nuts	41 ft. lbs.	56 Nm
Trans. Support Cushion/Torque Arm Bracket Bolts	41 ft. lbs.	56 Nm
Vibration Damper Bolts	80 ft. lbs.	108 Nm
Water Pump-to-Block Bolts	25 ft. lbs.	34 Nm

85353C23

TORQUE SPECIFICATIONS
1994–95 2.5L Engine

Component	U.S.	Metric
A/C Compressor Bracket-to-Engine Bolts	25 ft. lbs.	34 Nm
A/C Compressor Mounting Bolts	20 ft. lbs.	27 Nm
A/C Low Pressure Service Valve Nut	28 ft. lbs.	38 Nm
Block Heater Nut	16 in. lbs.	1.8 Nm
Camshaft Sprocket Bolt	80 ft. lbs.	108 Nm
Connecting Rod Nuts	33 ft. lbs.	45 Nm
Converter Plate Bolts	50 ft. lbs. + 60°	68 Nm + 60°
Cylinder Head Bolts (#1–10 & #12–14)	110 ft. lbs.	149 Nm
(#11)	100 ft. lbs.	135 Nm
Cylinder Head Cover Bolts	85 in. lbs.	10 Nm
Driver Plate-to-Torque Converter Bolts	40 ft. lbs.	54 Nm
Engine Shock Damper Stud Nuts	17 ft. lbs.	23 Nm
Engine Mounts—Front		
Engine Support Bracket Bolts	46 ft. lbs.	62 Nm
Support Cushion Bolts/Nuts	38 ft. lbs.	52 Nm
Support Cushion Bracket		
Bolts	40 ft. lbs.	54 Nm
Stud Nuts	30 ft. lbs.	41 Nm
Support Cushion Thru-Bolt	51 ft. lbs.	69 Nm
Engine Mount—Rear		
Skid Plate/Support Cushion Stud Nuts	40 ft. lbs.	54 Nm
Skid Plate-to-Sill Bolts	65 ft. lbs.	88 Nm
Support Cushion/Torque Arm Bracket Nuts (Automatic)	40 ft. lbs.	54 Nm
Torque Arm Bracket Bolts (Automatic)	40 ft. lbs.	54 Nm
Torque Arm Bracket/Support Cushion Bolts (Manual)	40 ft. lbs.	54 Nm
Exhaust Manifold-to-Pipe Nuts	20 ft. lbs.	27 Nm
Flywheel/Converter Housing Bolts	28 ft. lbs.	38 Nm
Flywheel/Crankshaft Bolts	105 ft. lbs.	143 Nm
Front Cover-to-Block Bolts (1/4-20)	60 in. lbs.	7 Nm
Front Cover-to-Block Bolts (5/16-18)	192 in. lbs.	22 Nm
Fuel Pump Bolts	16 ft. lbs.	22 Nm
Generator Adjusting Bolt	18 ft. lbs.	24 Nm
Generator Pivot Bolt/Nut	28 ft. lbs.	38 Nm
Generator Mounting Bracket-to-Engine Bolts	28 ft. lbs.	38 Nm
Generator Mounting-to-Head Bolts	33 ft. lbs.	45 Nm
Main Bearing Bolts	80 ft. lbs.	108 Nm
Oil Filter	13 ft. lbs.	18 Nm
Oil Filter Connector	40 ft. lbs.	54 Nm
Oil Galley Plug	30 ft. lbs.	41 Nm
Oil Pan Bolts (1/4-20)	129 in. lbs.	14 Nm
(5/16-18)	156 in. lbs.	18 Nm
Oil Pan Drain Plug	25 ft. lbs.	34 Nm
Oil Pump Attaching Bolts (Short Bolts)	10 ft. lbs.	14 Nm
(Long Bolts)	17 ft. lbs.	23 Nm
Oil Pump Cover Bolts	70 in. lbs.	8 Nm
Power Steering Pump Pressure Hose Nut	38 ft. lbs.	52 Nm
Rocker Arm Assembly-to-Cylinder Head Capscrews	21 ft. lbs.	28 Nm
Spark Plugs	27 ft. lbs.	37 Nm
Starting Motor Mounting Bolts	33 ft. lbs.	45 Nm

85353C24

TORQUE SPECIFICATIONS
1994–95 2.5L Engine

Component	U.S.	Metric
Thermostat Housing	13 ft. lbs.	18 Nm
Vibration Damper Bolts	80 ft. lbs.	108 Nm
Water Pump-to-Block Bolts	270 in. lbs.	31 Nm

85353CA4

TORQUE SPECIFICATIONS
1991 4.0L Engine

Component	U.S.	Metric
A/C Compressor Bracket-to-Engine Bolts	25 ft. lbs.	34 Nm
A/C Low Pressure Service Valve Nut	28 ft. lbs.	38 Nm
Alternator Adjusting Bolt	18 ft. lbs.	24 Nm
Alternator Pivot Bolt/Nut	28 ft. lbs.	38 Nm
Camshaft Sprocket Bolt	80 ft. lbs.	108 Nm
Connecting Rod Bolt Nuts	33 ft. lbs.	45 Nm
Crankshaft Main Bearing Bolts	80 ft. lbs.	108 Nm
Crankshaft Pulley-to-Damper Nut	20 ft. lbs.	27 Nm
Cylinder Head Bolts (#1–10 & #12–14)	110 ft. lbs.	149 Nm
(#11)	100 ft. lbs.	135 Nm
Cylinder Head Cover Bolts	55 in. lbs.	6 Nm
Exhaust Manifold-to-Downpipe Nuts	20 ft. lbs.	27 Nm
Flywheel/Converter Housing Bolts	28 ft. lbs.	38 Nm
Fuel Pump Bolts	16 ft. lbs.	22 Nm
Oil Pan Bolts—1/4-20	7 ft. lbs.	9 Nm
—5/16-18	11 ft. lbs.	15 Nm
Oil Pan Drain Plug	30 ft. lbs.	41 Nm
Oil Pump Attaching Bolts (Short)	10 ft. lbs.	14 Nm
Oil Pump Attaching Bolts (Long)	17 ft. lbs.	23 Nm
Oil Pan Cover Bolts	70 in. lbs.	8 Nm
Power Steering Pump Pressure Hose Nut	38 ft. lbs.	52 Nm
Rocker Arm Assembly-to-Cylinder Head	19 ft. lbs.	26 Nm
Spark Plugs	27 ft. lbs.	37 Nm
Starting Motor-to-Cylinder Block Bolts	33 ft. lbs.	45 Nm
Timing Case Cover-to-Block Bolts	62 in. lbs.	7 Nm
Vibration Damper Bolt (Lubricated)	80 ft. lbs.	108 Nm

85353C25

TORQUE SPECIFICATIONS
1992–93 4.0L Engine

Component	U.S.	Metric
A/C Compressor Bracket-to-Engine Bolts	25 ft. lbs.	34 Nm
A/C Compressor Mounting Bolts	20 ft. lbs.	27 Nm
A/C Low Pressure Service Valve Nut	28 ft. lbs.	38 Nm
Camshaft Sprocket Bolt	80 ft. lbs.	108 Nm
Connecting Rod Nuts	33 ft. lbs.	45 Nm
Cylinder Head Bolts (#1–10 & #12–14)	110 ft. lbs.	149 Nm
(#11)	100 ft. lbs.	135 Nm
Cylinder Head Cover Bolts 1992:	85 in. lbs.	10 Nm
1993:	75 in. lbs.	9 Nm
Engine Support Bracket Bolts	45 ft. lbs.	61 Nm
Exhaust Manifold-to-Pipe Nuts	20 ft. lbs.	27 Nm
Flywheel/Converter Housing Bolts	28 ft. lbs.	38 Nm
Front Cover-to-Block Bolts	60 in. lbs.	7 Nm
Front Support Bracket-to-Cylinder Block Bolts	45 ft. lbs.	61 Nm
Front Support Cushion-to-Mount Thru Bolt	48 ft. lbs.	65 Nm
Front Support Cushion-to-Sill Bracket	48 ft. lbs.	65 Nm
Fuel Pump Bolts	16 ft. lbs.	22 Nm
Generator Adjusting Bolt	18 ft. lbs.	24 Nm
Generator Pivot Bolt/Nut	28 ft. lbs.	38 Nm
Main Bearing Bolts	80 ft. lbs.	108 Nm
Oil Filter	13 ft. lbs.	18 Nm
Oil Galley Plug	30 ft. lbs.	41 Nm
Oil Pan Bolts (1/4-20)	114 in. lbs.	13 Nm
(5/16-18)	156 in. lbs.	18 Nm
Oil Pan Drain Plug	30 ft. lbs.	41 Nm
Oil Pump Attaching Bolts (Short Bolts)	10 ft. lbs.	14 Nm
(Long Bolts)	17 ft. lbs.	23 Nm
Oil Pan Cover Bolts	70 in. lbs.	8 Nm
Power Steering Pump Pressure Hose Nut	38 ft. lbs.	52 Nm
Rear Support Bracket-to-Transmission Bolts	41 ft. lbs.	56 Nm
Rocker Arm Assembly-to-Cylinder Head Capscrews	21 ft. lbs.	28 Nm
Skid Plate-to-Sill Bolts	65 ft. lbs.	88 Nm
Spark Plugs	27 ft. lbs.	37 Nm
Starting Motor Mounting Bolts	33 ft. lbs.	45 Nm
Timing Case Cover-to-Block Bolts	60 in. lbs.	7 Nm
Transmission Support Cushion Nuts	41 ft. lbs.	56 Nm
Trans. Support Cushion/Torque Arm Bracket Bolts	41 ft. lbs.	56 Nm
Vibration Damper Bolts	80 ft. lbs.	108 Nm
Water Pump-to-Block Bolts 1992:	18 ft. lbs.	24 Nm
1993:	25 ft. lbs.	34 Nm

85353C27

TORQUE SPECIFICATIONS
1994–95 4.0L Engine

Component	U.S.	Metric
A/C Compressor Bracket-to-Engine Bolts	25 ft. lbs.	34 Nm
A/C Compressor Mounting Bolts	20 ft. lbs.	27 Nm
A/C Low Pressure Service Valve Nut	28 ft. lbs.	38 Nm
Block Heater Nut	16 in. lbs.	1.8 Nm
Camshaft Sprocket Bolt	80 ft. lbs.	108 Nm
Connecting Rod Nuts	33 ft. lbs.	45 Nm
Cylinder Block Drain Plugs	30 ft. lbs.	41 Nm
Cylinder Head Bolts (#1–10 & #12–14)	110 ft. lbs.	149 Nm
(#11)	100 ft. lbs.	135 Nm
Cylinder Head Cover Bolts	85 in. lbs.	10 Nm
Engine Mounts—Front		
Engine Support Bracket Bolts	46 ft. lbs.	62 Nm
Support Cushion Bolts/Nuts	38 ft. lbs.	52 Nm
Support Cushion Thru-Bolt Vehicles	51 ft. lbs.	69 Nm
Engine Mount—Rear		
Insulator Stud Assembly Nut	30 ft. lbs.	41 Nm
Skid Plate/Support Cushion Stud Nuts	40 ft. lbs.	54 Nm
Skid Plate-to-Sill Bolts	65 ft. lbs.	88 Nm
Support Cushion/Torque Arm Bracket Nuts	40 ft. lbs.	54 Nm
Torque Arm Bracket Bolts (Automatic)	40 ft. lbs.	54 Nm
Torque Arm Bracket/Support Cushion Bolts (Manual)	40 ft. lbs.	54 Nm
Exhaust Manifold-to-Pipe Nuts	20 ft. lbs.	27 Nm
Flywheel/Converter Housing Bolts	28 ft. lbs.	38 Nm
Flywheel/Crankshaft Bolts	105 ft. lbs.	143 Nm
Front Cover-to-Block Bolts (1/4-20)	60 in. lbs.	7 Nm
Front Cover-to-Block Bolts (5/16-18)	192 in. lbs.	22 Nm
Fuel Pump Bolts	16 ft. lbs.	22 Nm
Generator Adjusting Bolt	18 ft. lbs.	24 Nm
Generator Pivot Bolt/Nut	28 ft. lbs.	38 Nm
Main Bearing Bolts	80 ft. lbs.	108 Nm
Oil Filter	13 ft. lbs.	18 Nm
Oil Filter Adapter Bolts	75 ft. lbs.	102 Nm
Oil Galley Plug	30 ft. lbs.	41 Nm
Oil Pan Bolts (1/4-20)	120 in. lbs.	14 Nm
(5/16-18)	156 in. lbs.	18 Nm
Oil Pan Drain Plug	25 ft. lbs.	34 Nm
Oil Pump Attaching Bolts (Short Bolts)	10 ft. lbs.	14 Nm
(Long Bolts)	17 ft. lbs.	23 Nm
Oil Pump Cover Bolts	70 in. lbs.	8 Nm
Power Steering Pump Pressure Hose Nut	38 ft. lbs.	52 Nm
Rocker Arm Assembly-to-Cylinder Head Capscrews	21 ft. lbs.	28 Nm
Spark Plugs	27 ft. lbs.	37 Nm
Starting Motor Mounting Bolts	33 ft. lbs.	45 Nm
Thermostat Housing	156 in. lbs.	18 Nm
Vibration Damper Bolts	80 ft. lbs.	108 Nm
Water Pump-to-Block Bolts	270 in. lbs.	31 Nm

85353C28

TORQUE SPECIFICATIONS
1987–89 4.2L Engine

Component	U.S.	Metric
A/C Compressor Bracket-to-Engine Bolts	25 ft. lbs.	34 Nm
A/C Low Pressure Service Valve Nut	28 ft. lbs.	38 Nm
Alternator Adjusting Bolt	18 ft. lbs.	24 Nm
Alternator Pivot Bolt/Nut	28 ft. lbs.	38 Nm
Camshaft Sprocket Bolt	80 ft. lbs.	108 Nm
Connecting Rod Bolt Nuts	33 ft. lbs.	45 Nm
Crankshaft Main Bearing Bolts	80 ft. lbs.	108 Nm
Cylinder Head Bolts	85 ft. lbs.	115 Nm
Cylinder Head Cover Nuts	28 in. lbs.	3 Nm
Cylinder Head Cover Retaining Bolts	55 in. lbs.	6 Nm
Damper Pulley Retaining Bolts	20 ft. lbs.	27 Nm
Exhaust Manifold-to-Downpipe Nuts	20 ft. lbs.	27 Nm
Flywheel/Converter Housing Bolts	28 ft. lbs.	38 Nm
Fuel Pump Bolts	16 ft. lbs.	22 Nm
Oil Pan Bolts—1/4-20	7 ft. lbs.	9 Nm
—5/16-18	11 ft. lbs.	15 Nm
Oil Pan Drain Plug	30 ft. lbs.	41 Nm
Oil Pan-to-Timing Case Cover Bolts	11 ft. lbs.	13 Nm
Oil Pump Attaching Bolts (Short)	10 ft. lbs.	14 Nm
Oil Pump Attaching Bolts (Long)	17 ft. lbs.	23 Nm
Oil Pump Cover Bolts	70 in. lbs.	8 Nm
Power Steering Pump Pressure Hose Nut	38 ft. lbs.	52 Nm
Rocker Arm Assembly-to-Cylinder Head	19 ft. lbs.	26 Nm
Spark Plugs	28 ft. lbs.	38 Nm
Starting Motor-to-Cylinder Block Bolts	33 ft. lbs.	45 Nm
Timing Case Cover-to-Block Bolts	62 in. lbs.	7 Nm
Vibration Damper Bolt (Lubricated)	80 ft. lbs.	108 Nm

85353C29

TORQUE SPECIFICATIONS
1990 4.2L Engine

Component	U.S.	Metric
A/C Compressor Bracket-to-Engine Bolts	25 ft. lbs.	34 Nm
A/C Low Pressure Service Valve Nut	28 ft. lbs.	38 Nm
Alternator Adjusting Bolt	18 ft. lbs.	24 Nm
Alternator Pivot Bolt/Nut	28 ft. lbs.	38 Nm
Camshaft Sprocket Bolt	80 ft. lbs.	108 Nm
Connecting Rod Bolt Nuts	33 ft. lbs.	45 Nm
Crankshaft Main Bearing Bolts	80 ft. lbs.	108 Nm
Cylinder Head Bolts	85 ft. lbs.	115 Nm
Cylinder Head Cover Bolts	70 in. lbs.	8 Nm
Cylinder Head Cover Retaining Bolts	55 in. lbs.	6 Nm
Damper Pulley Retaining Bolts	20 ft. lbs.	27 Nm
Exhaust Manifold-to-Downpipe Nuts	20 ft. lbs.	27 Nm
Flywheel/Converter Housing Bolts	28 ft. lbs.	38 Nm
Fuel Pump Bolts	16 ft. lbs.	22 Nm
Oil Pan Bolts—1/4-20	7 ft. lbs.	9 Nm
—5/16-18	11 ft. lbs.	15 Nm
Oil Pan Drain Plug	30 ft. lbs.	41 Nm
Oil Pan-to-Timing Case Cover Bolts	11 ft. lbs.	13 Nm
Oil Pump Attaching Bolts (Short)	10 ft. lbs.	14 Nm
Oil Pump Attaching Bolts (Long)	17 ft. lbs.	23 Nm
Oil Pump Cover Bolts	70 in. lbs.	8 Nm
Power Steering Pump Pressure Hose Nut	38 ft. lbs.	52 Nm
Rocker Arm Assembly-to-Cylinder Head	19 ft. lbs.	26 Nm
Spark Plugs	28 ft. lbs.	38 Nm
Starting Motor-to-Cylinder Block Bolts	33 ft. lbs.	45 Nm
Timing Case Cover-to-Block Bolts	62 in. lbs.	7 Nm
Vibration Damper Bolt (Lubricated)	80 ft. lbs.	108 Nm

85353C30

USING A VACUUM GAUGE

White needle = steady needle ***Dark needle = drifting needle***

The vacuum gauge is one of the most useful and easy-to-use diagnostic tools. It is inexpensive, easy to hook up, and provides valuable information about the condition of your engine.

Indication: Normal engine in good condition

Gauge reading: Steady, from 17–22 in./Hg.

Indication: Sticking valve or ignition miss

Gauge reading: Needle fluctuates from 15–20 in./Hg. at idle

Indication: Late ignition or valve timing, low compression, stuck throttle valve, leaking carburetor or manifold gasket.

Gauge reading: Low (15–20 in./Hg.) but steady

Indication: Improper carburetor adjustment, or minor intake leak at carburetor or manifold

NOTE: Bad fuel injector O-rings may also cause this reading.

Gauge reading: Drifting needle

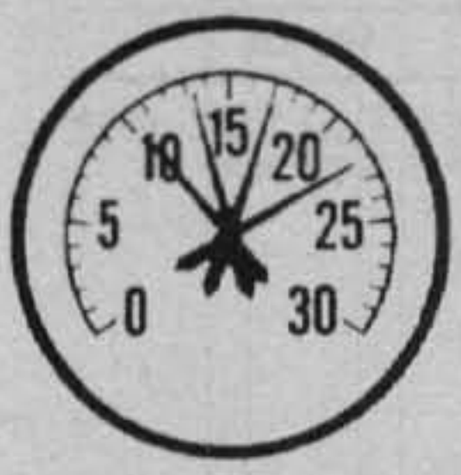

Indication: Weak valve springs, worn valve stem guides, or leaky cylinder head gasket (vibrating excessively at all speeds).

NOTE: A plugged catalytic converter may also cause this reading.

Gauge reading: Needle fluctuates as engine speed increases

Indication: Burnt valve or improper valve clearance. The needle will drop when the defective valve operates.

Gauge reading: Steady needle, but drops regularly

Indication: Choked muffler or obstruction in system. Speed up the engine. Choked muffler will exhibit a slow drop of vacuum to zero.

Gauge reading: Gradual drop in reading at idle

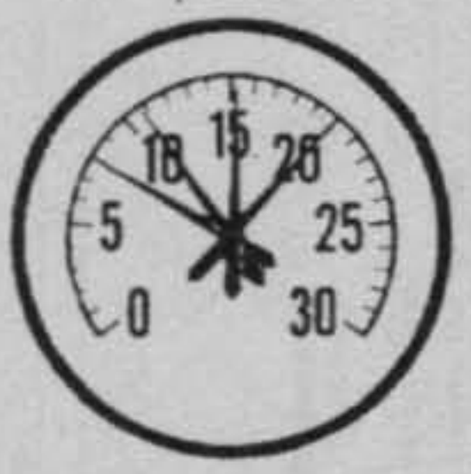

Indication: Worn valve guides

Gauge reading: Needle vibrates excessively at idle, but steadies as engine speed increases

1CCS3C01

EXHAUST EMISSION CONTROLS 4-2
POSITIVE CRANKCASE VENTILATION (PCV) SYSTEM 4-2
CRANKCASE VENTILATION (CCV) SYSTEM 4-2
THERMOSTATIC AIR CLEANER (TAC) SYSTEM 4-2
NON-THERMOSTATIC AIR CLEANER ASSEMBLY 4-3
EMISSIONS MAINTENANCE REMINDER LIGHT 4-3
OXYGEN SENSOR 4-3
REMOVAL & INSTALLATION 4-3
PULSE AIR SYSTEM 4-4
COMPONENTS 4-4
EXHAUST GAS RECIRCULATION (EGR) SYSTEM 4-4
FUNCTIONAL TESTING 4-4
CATALYTIC CONVERTER 4-5
EVAPORATIVE CANISTER 4-6
PRESSURE/VACUUM FUEL TANK FILLER CAP 4-6
PRESSURE RELIEF/ROLLOVER VALVE 4-6
REMOVAL & INSTALLATION 4-6
COMPUTERIZED EMISSION CONTROL (CEC) FEEDBACK SYSTEM 4-6
GENERAL INFORMATION 4-6
COMPONENTS 4-7
CEC SYSTEM OPERATION 4-9
TROUBLESHOOTING 4-10
INITIALIZATION 4-10
PRELIMINARY TESTS 4-10
DIAGNOSTIC TESTS 4-10
THROTTLE BODY (SINGLE POINT) FUEL INJECTION 4-23
GENERAL INFORMATION 4-23
TROUBLESHOOTING 4-23
DIAGNOSTIC TESTS 4-23
MULTI-POINT FUEL INJECTION (MFI) SYSTEM 4-38
GENERAL INFORMATION 4-38
TROUBLESHOOTING 4-38
FAULT CODES 4-38
SYSTEM SELF-DIAGNOSTICS 4-43
COMPONENT TESTING 4-43
VACUUM DIAGRAMS 4-45

4

DRIVEABILITY AND EMISSION CONTROLS

EXHAUST EMISSION CONTROLS 4-2
COMPUTERIZED EMISSION CONTROL (CEC) FEEDBACK SYSTEM 4-6
THROTTLE BODY (SINGLE POINT) FUEL INJECTION 4-23
MULTI-POINT FUEL INJECTION (MFI) SYSTEM 4-38
VACUUM DIAGRAMS 4-45

EXHAUST EMISSION CONTROLS

Positive Crankcase Ventilation (PCV) System

All 1987–90 vehicles covered by this manual are equipped with a PCV valve system in order to deal with crankcase emissions. The system consists of a Positive Crankcase Ventilation (PCV) valve, a closed or open oil filler cap and hoses to connect this equipment.

When the engine is running, a small portion of the gases which are formed in the combustion chamber during engine operation, leak past the piston rings and enter the crankcase. Since these gases are under pressure, they tend to escape from the crankcase and enter the atmosphere. If these gases were allowed to remain in the crankcase for any length of time, they would contaminate the engine oil and cause sludge to build up. If the gases were allowed to escape into the atmosphere, they would pollute the air, as they contain unburned hydrocarbons. The crankcase emission control equipment recycles these gases back into the engine combustion chamber where they are burned.

While the engine is running, clean filtered air is drawn into the crankcase either directly through the oil filler cap, or through the carburetor air filter and then through a hose leading to the oil filler cap. As the air passes through the crankcase, it picks up the combustion gases and carries them out of the crankcase, up through the PCV valve and into the intake manifold. After they enter the intake manifold, they are drawn into the combustion chamber and burned.

The most critical component in the system is the PCV valve. This vacuum controlled valve regulates the amount of gases which are recycled into the combustion chamber. At low engine speeds, the valve is partially closed (by intake manifold vacuum acting against spring pressure which would otherwise open the valve), limiting the flow of gases into the intake manifold. As engine speed increases (and manifold vacuum decreases), the valve opens (from spring pressure) to admit greater quantities of crankcase gases into the intake manifold. If the valve should become blocked or plugged, the gases will be prevented from escaping from the crankcases by the normal route. Since these gases are under pressure, they will find their own way out of the crankcase. This alternate route is usually a weak oil seal or gasket in the engine. As the gas escapes by the gasket, it also creates an oil leak. Besides causing oil leaks, a clogged PCV valve also allows these gases to remain in the crankcase for an extended period of time, promoting the formation of sludge in the engine.

Please refer to Section 1 of this manual, General Information & Maintenance, for PCV valve testing and replacement procedures.

Crankcase Ventilation (CCV) System

See Figures 1 and 2

All 1991–95 Wranglers are equipped with a Crankcase Ventilation (CCV) system. The CCV system performs the same function as a conventional PCV system, but does not use a vacuum controlled valve.

On the 4.0L engines, a molded vacuum tube connects manifold vacuum to the top of the cylinder head (valve) cover at the dash panel end. The vacuum tube contains a fixed orifice of a calibrated size. It meters the amount of crankcase vapors drawn out of the engine.

On the 2.5L engines, a fitting on the driver's side of the cylinder head (valve) cover contains the metered orifice. It is connected to manifold vacuum.

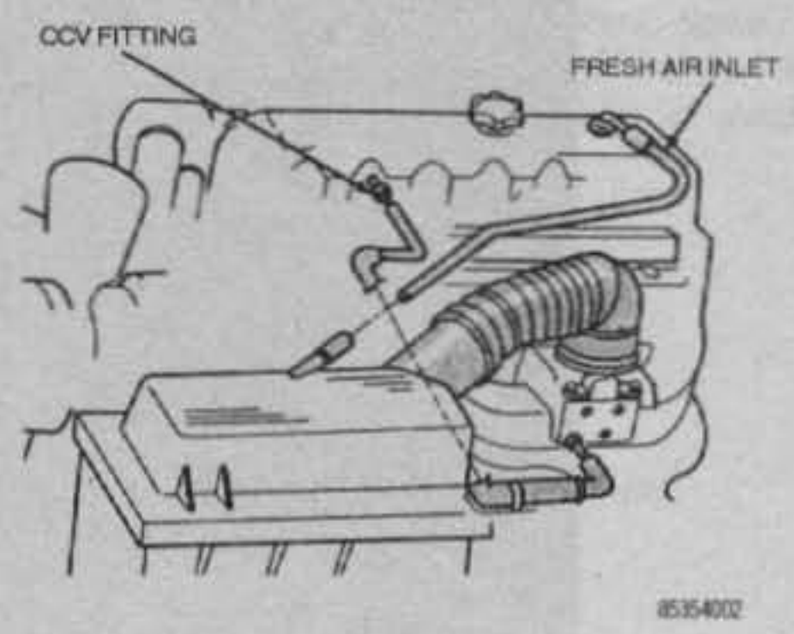

Fig. 1 2.5L engine CCV system

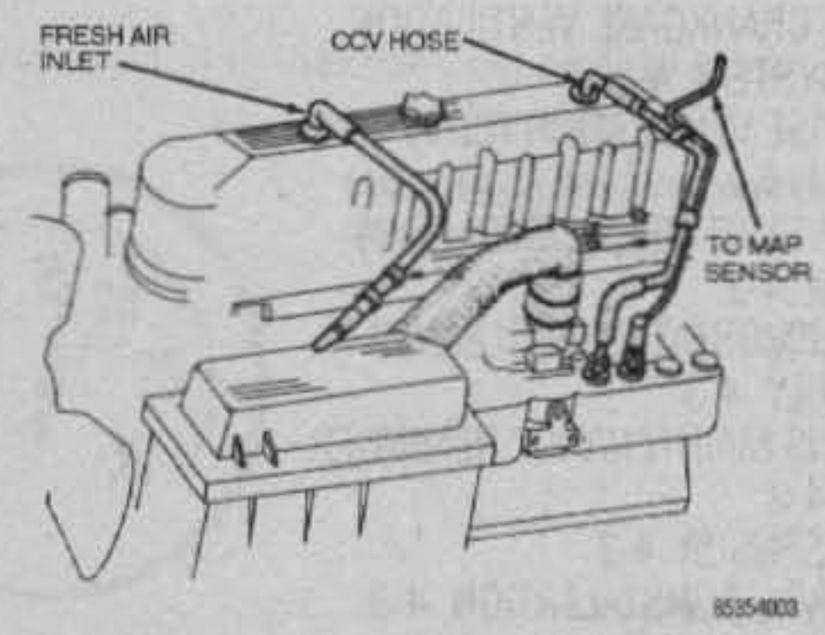

Fig. 2 CCV system used on 4.0L engines

A fresh air supply hose from the air cleaner is connected to to the front of th cylinder head cover on the 4.0L engines, and to the rear of the cover on the 2.5 engines.

When the engine is operating, fresh air enters the engine and mixes with crankcase vapors. Manifold vacuum draws the vapor/air mixture through the fixed orifice and into the intake manifold. The vapors are then consumed durin combustion.

Because this system does not use a vacuum actuated valve (as the PCV system found on earlier years does), there are few components. Check any system hoses for cuts, breaks or other damage and replace, if necessary. The fixed orifice should require no periodic attention and should operate properly unless it becomes clogged by dirt, debris or excessively sludged oil.

Thermostatic Air Cleaner (TAC) System

See Figure 3

A thermostatically controlled air cleaner was used on models through 1990 The system consists of a heat shroud which is integral with the right side

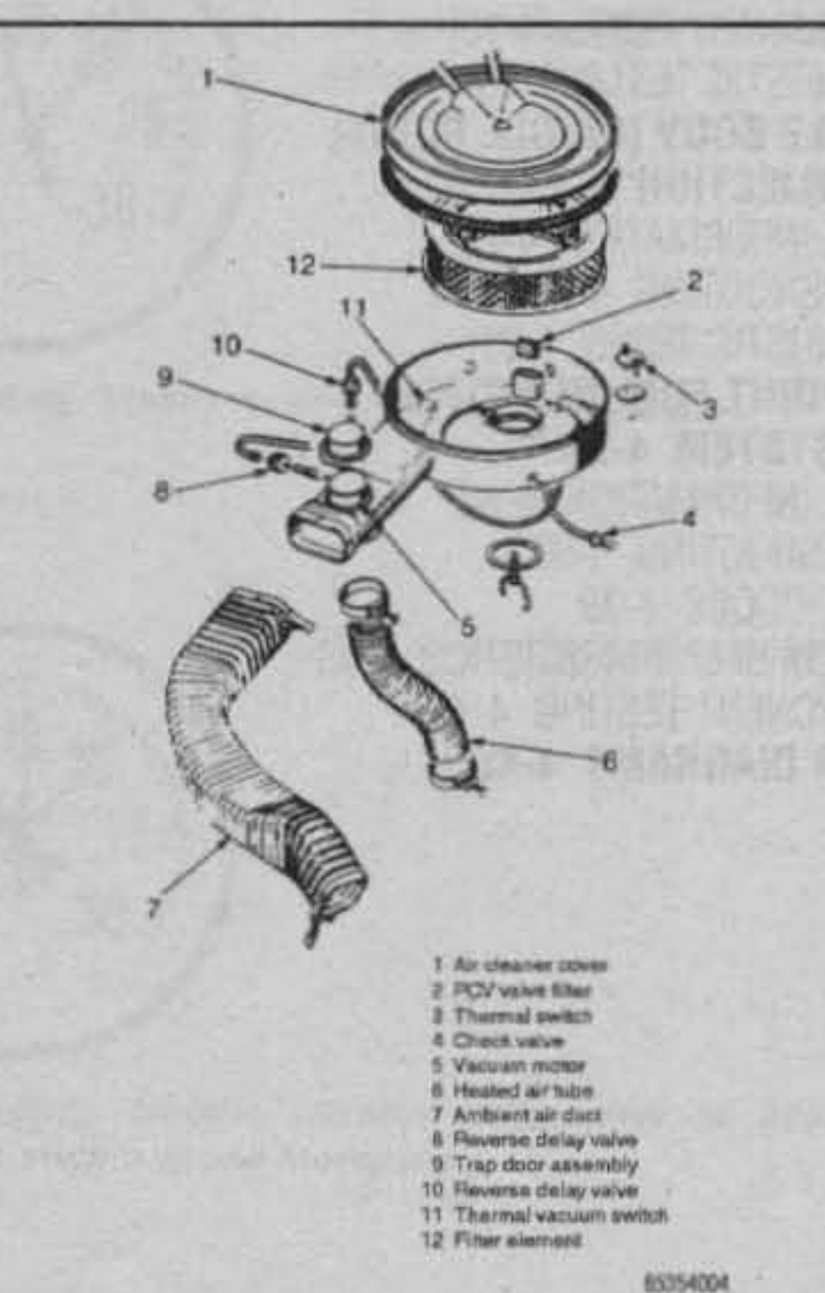

Fig. 3 Common TAC system found on 1987–90 vehicles

exhaust manifold, a hot air hose and a special air cleaner assembly equipped with a thermal sensor and a vacuum motor and air valve assembly.

The thermal sensor incorporates an air bleed valve which regulates the amount of vacuum applied to the vacuum motor, controlling the air valve position to supply either heated air from the exhaust manifold or ambient air from the intake snorkel.

During the warm-up period when underhood temperatures are low, the air bleed valve is closed and sufficient vacuum is applied to the vacuum motor to hold the air valve in the closed (heat on) position.

As the air temperature entering the TAC approaches approximately 115°F (46°C), the bleed valve opens to decrease the amount of vacuum applied to the vacuum motor. The diaphragm spring in the vacuum motor then moves the air valve into the open (heat off) position, allowing only air from the intake snorkel only to enter the TAC.

The air valve in the air cleaner will also open, regardless of air temperature, during heavy acceleration (when intake vacuum drops) in order to obtain maximum air flow through the air cleaner.

Non-Thermostatic Air Cleaner Assembly

The air cleaner assembly used on 1991–95 vehicles does not use the thermostatically controlled blend door and vacuum motor used in previous years. The air cleaner on these models is always open to ambient air.

The Single Board Engine Controller (SBEC) used in 1991–95 vehicles monitors air temperature in the intake manifold through the Manifold Air Temperature (MAT) sensor. The controller then adjusts injector pulse and ignition timing to compensate for air temperature.

Emissions Maintenance Reminder Light

See Figure 4

Most Jeep vehicles are equipped with an Emissions Maintenance Reminder (EMR) light. The EMR light comes on after the vehicle has reached 82,500 miles (132,767 km) and informs the owner when oxygen sensor and other related emissions service is required. The light is located in the instrument cluster.

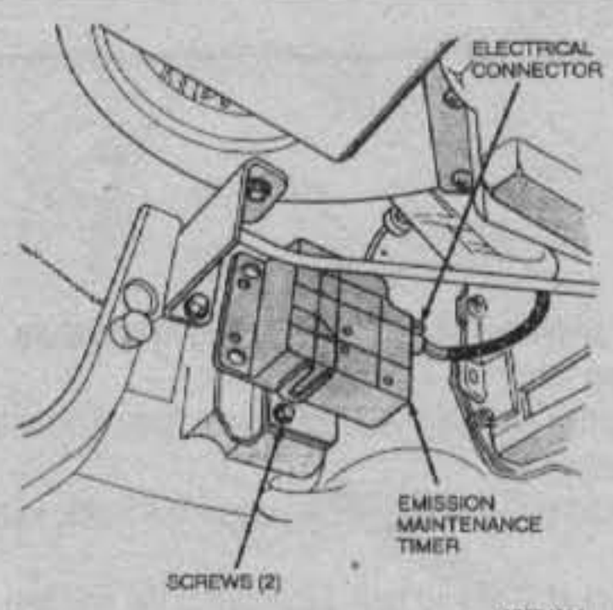

Fig. 4 Emission maintenance timer

The oxygen sensor and EMR are interdependent. When the reminder light illuminates, the oxygen sensor and EMR should be replaced simultaneously. This is important in ensuring proper engine performance. Maintenance reminders for 1991 vehicles are reset using a Diagnostic Readout Box (DRB). See the DRB instruction manual for further instructions.

➡Resetting or replacing the EMR without performing the required maintenance is a violation of federal law. Only after performing the required maintenance, should the EMR be reset.

The maintenance reminder for pre-1991 vehicles cannot be reset after reaching the specified mileage, the unit must be replaced. The unit is mounted on the dash panel to the right of the accelerator pedal. To replace the reminder:

1. Remove the attaching screws and disconnect the reminder electrical connector.
2. Install the connector to the new EMR and replace the attaching screws.

Oxygen Sensor

See Figures 5 and 6

The oxygen sensor is located in the exhaust manifold and provides input to the ECU relating oxygen content of the exhaust gas. The ECU uses this information to vary air/fuel ratio. A lean air/fuel mixture causes a greater oxygen content and a rich air/fuel mixture causes less oxygen content. On 1987–90 2.5L engines, the oxygen sensor is equipped with an electrically heated element that keeps the sensor at operating temperature under all conditions.

REMOVAL & INSTALLATION

See Figures 7 and 8

1. Raise the vehicle and support it safely. Allow the exhaust system to cool sufficiently in order to permit servicing without burning yourself.
2. Disengage the wire connector from the oxygen sensor.
3. Remove the oxygen sensor from the exhaust manifold.

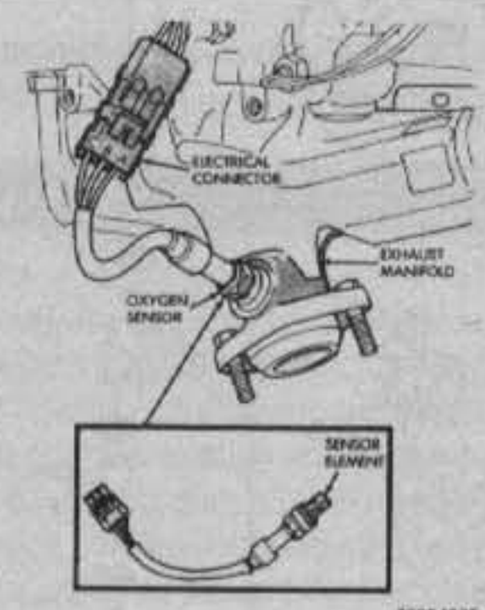

Fig. 5 Heated oxygen sensor—1987–90 with the 2.5L engine

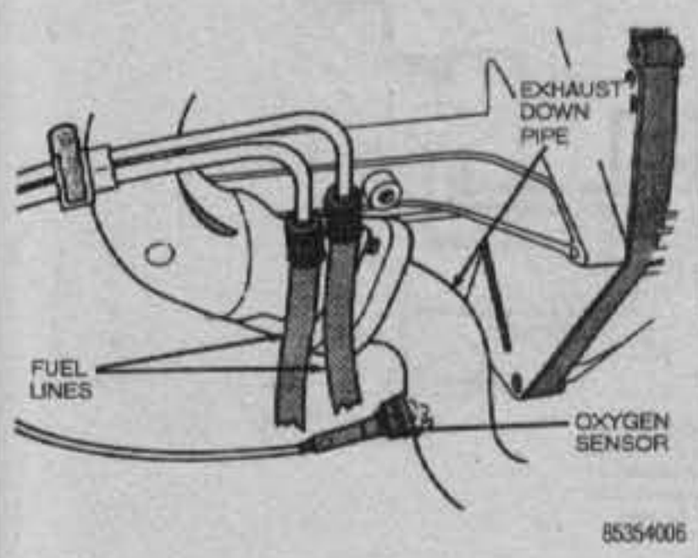

Fig. 6 Common oxygen sensor location—all engines

Fig. 7 Disengaging the oxygen sensor harness connector

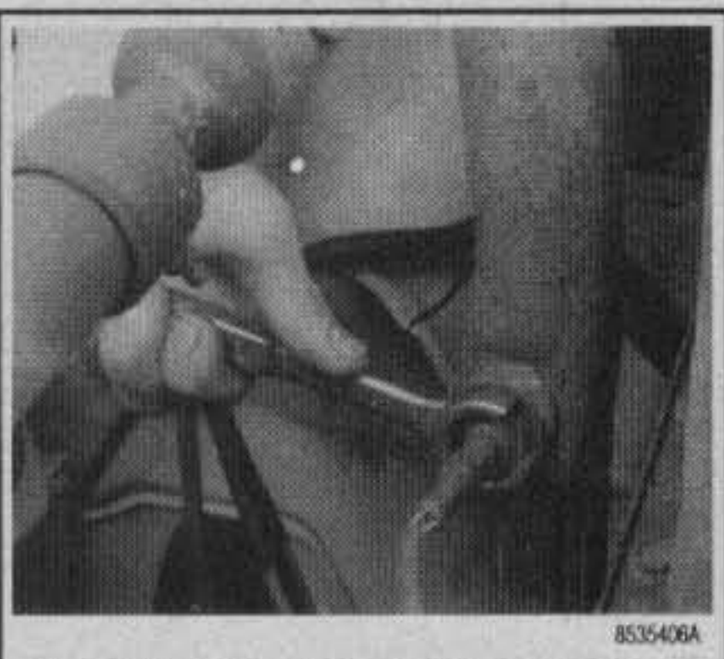

Fig. 8 Removing the oxygen sensor from the exhaust pipe

4. If not already done, coat the threads of the replacement sensor with anti-seize compound. Be careful not to contaminate the oxygen sensor probe with the anti-seize.

5. Install the oxygen sensor into the exhaust manifold and tighten to 22–35 ft. lbs. (30–47 Nm) Engage the wire connector.

Pulse Air System

See Figure 9

The Pulse Air Injection System is used on early 2.5L engines. The system utilizes the alternating positive and negative exhaust pressure pulsations instead of an air pump to inject air into the exhaust system and produce exhaust gas oxidation.

The system operates as air enters through the filtered side of the air cleaner and flows to the air control valve. When opened by the air switch, the control valve allows this air to continue through the air injection check valve. From the valve, the air enters the exhaust system and is injected either into the front exhaust pipe (upstream) or into the catalytic converter (downstream), depending upon the engine operating conditions. The CEC system Micro Computer Unit (MCU) controls the switching.

COMPONENTS

Air Injection Check Valve

The air injection check valve is a one-way reed valve that is opened or closed by the negative and positive exhaust pressure pulsations. During negative exhaust pulse (low pressure), atmospheric pressure opens the check valve and forces air into the exhaust system. Being a one-way valve, the reed prevents exhaust from being forced back through during positive pressure pulsations (high pressure).

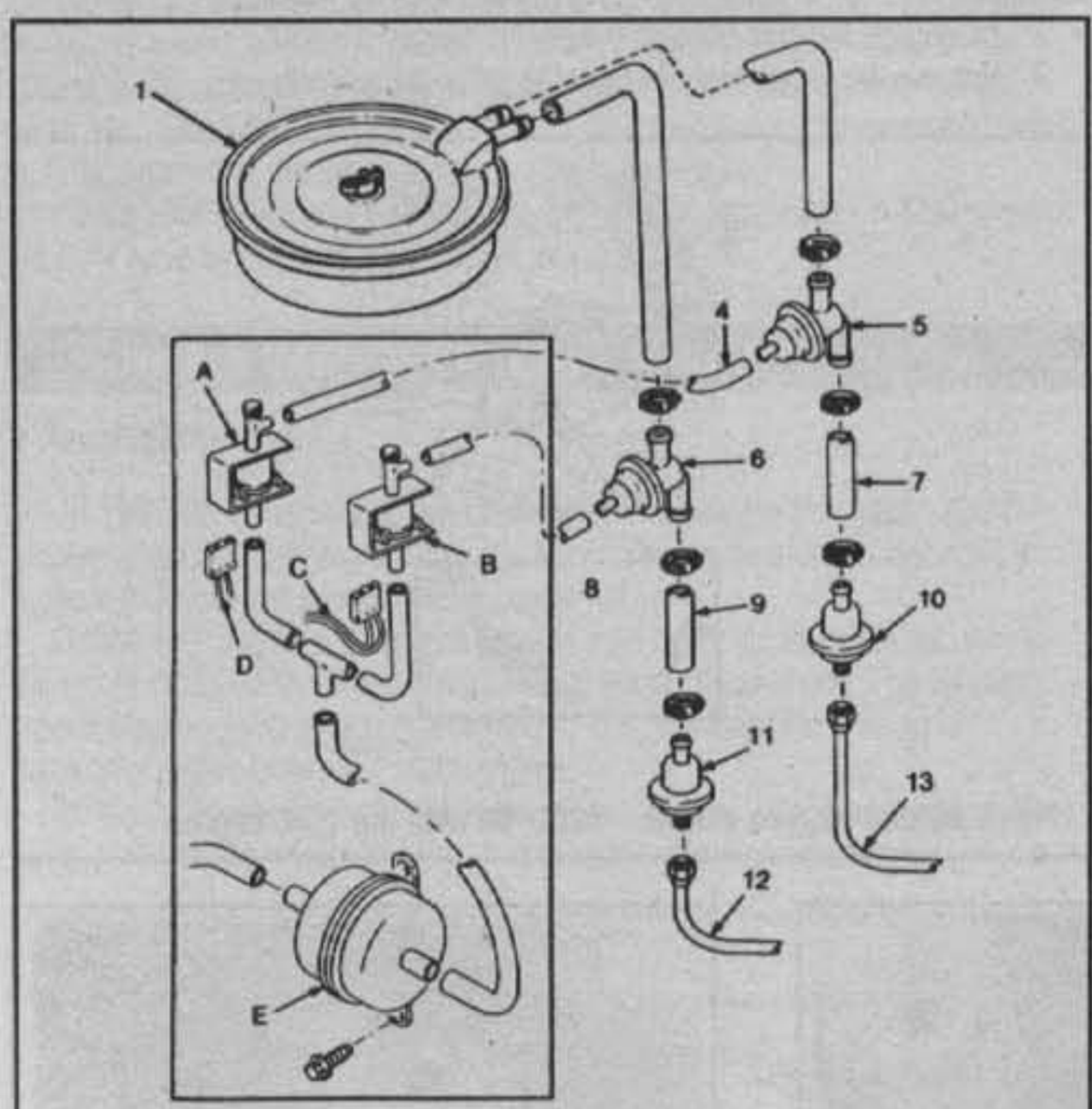

1 Air cleaner
2 Air cleaner-to-downstream air control valve vacuum hose
3 Air cleaner-to-upstream air control valve vacuum hose
4 Upstream vacuum hose
5 Upstream air control valve
6 Downstream air control valve
7 Upstream check valve hose
8 Downstream vacuum hose
9 Downstream check valve hose
10 Upstream check valve
11 Downstream check valve
12 Downstream tube-to-converter
13 Upstream tube-to-exhaust pipe
A Air switch solenoid (upstream)
B Air switch solenoid (downstream)
C Control wires from MCU (Downstream)
D Control wires from MCU (upstream)
E Vacuum storage reservoir

85354007

Fig. 9 Exploded view of a common pulse air system—1987–90 with the 4.2L engine shown

Air Control Valve

The air control valve meters the supply of filtered air routed to the injection check valve. The valve is opened and closed by the air switch solenoid.

Air Switch Solenoid

The air switch solenoid operates the control valve by alternating vacuum on and off. The solenoid is controlled by the Micro Computer Unit (MCU).

Vacuum Storage Tank

Engine vacuum is stored in a reservoir tank until released by the air switch solenoid.

Micro Computer Unit (MCU)

The MCU switches air injection either upstream or downstream, depending on the engine's operating conditions, by energizing and de-energizing the air switch solenoid.

➡Refer to the CEC system diagnosis charts for test procedures of the Pulse Air System.

Exhaust Gas Recirculation (EGR) System

➡Only the 1987–90 vehicles covered by this manual are equipped with an Exhaust Gas Recirculation (EGR) system.

NOx (oxides of nitrogen) is a tailpipe emission caused by the oxidation of nitrogen in the combustion chamber. When the peak combustion temperatures go over 2500°F (1371°C) NOx is formed in excessive amounts. Exhaust gas is recirculated in order to dilute air/fuel mixtures entering the combustion chamber, thereby lowering the combustion temperatures.

Recirculation of the exhaust gases is accomplished with a movable valve between the exhaust and intake manifolds. Upon a predetermined demand, engine vacuum is routed to the valve, opening the connecting port and allowing exhaust gases to enter the intake tract.

FUNCTIONAL TESTING

2.5L Engine

See Figure 10

EGR SOLENOID

1. Start engine and bring to normal operating temperature. Allow engine to idle while performing tests.
2. Check vacuum at solenoid vacuum source hose. Disconnect the hose and attach a vacuum gauge.
3. Vacuum should be 15 in. Hg. If low, check for leaks, loose fittings or kinks in the line.
4. Check vacuum at solenoid port. Disconnect the line and attach a vacuum gauge.

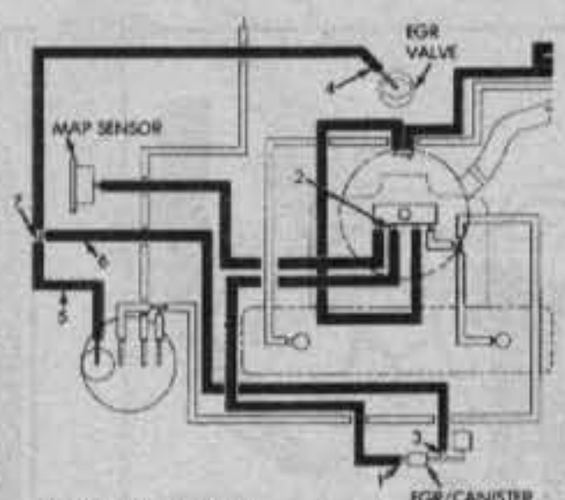

1 Solenoid vacuum source
2 Throttle body vacuum port
3 Solenoid output port
4 EGR valve vacuum hose
5 Canister purge hose
6 Solenoid output hose
7 Vacuum tee

85354008

Fig. 10 EGR system testing—1987–90 with the 2.5L engine

5. If vacuum reading is zero, go to Step 6. If vacuum is present, check solenoid operation with the Diagnostic Readout Box (DRB II) service tester and repair as necessary.

6. Disconnect electrical connector at solenoid. If vacuum is present, proceed to EGR valve test. If not, replace the solenoid.

EGR VALVE

See Figure 11

1. Leave solenoid electrical connector disengaged. Bypass the vacuum transducer, if equipped, and connect the EGR valve solenoid output hose directly to the nipple on the EGR valve.

2. The engine should run roughly or stall. If this occurs, the valve is good. Proceed to the Transducer test. If engine rpm does not change, disconnect hose from EGR and connect a hand vacuum pump.

3. Apply 12 in. Hg (41 kPa) of vacuum. If engine runs rough or stalls, inspect vacuum lines in EGR system for leaks and repair as necessary. If no leaks are found, go to to Step 4.

4. If engine idle still does not change, remove the EGR valve and inspect for a blockage in the intake manifold passage. Repair as necessary. If no blockage is found, replace the EGR valve.

4.2L Engine

CTO SWITCH

See Figure 12

1. Check vacuum lines for leaks and proper routing.
2. Disconnect vacuum line from EGR valve and connect a vacuum gauge.
3. Start engine and ensure that coolant is below 100°F (38°C).
4. Operate engine at 1,500 rpm. There should be no vacuum. If vacuum is present, replace the CTO switch.
5. Allow engine to idle until coolant temperature exceeds 115°F (46°C).
6. Operate the engine at 1,500 rpm. Vacuum should be present. If not, replace the CTO switch.

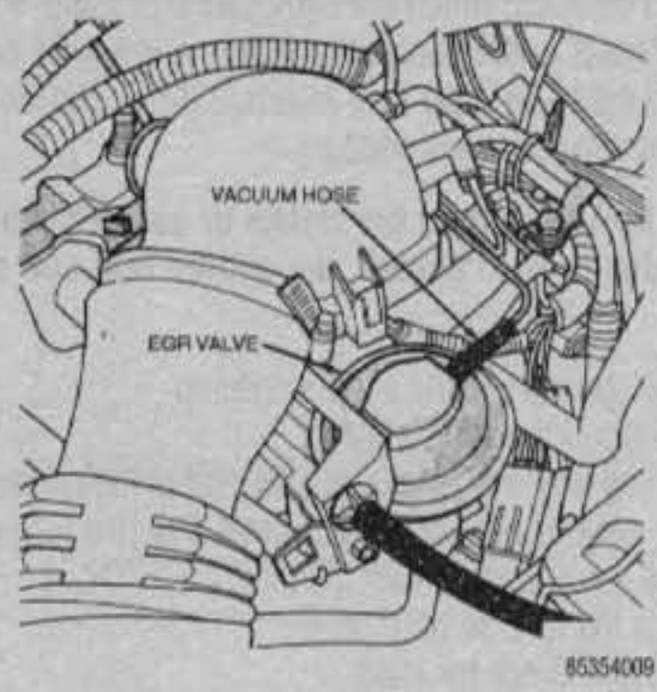

Fig. 11 EGR valve location—1987–90 with the 2.5L engine

EGR VALVE OPENING

See Figure 13

1. With the engine at normal operating temperature and idling, rapidly open and close the throttle (allowing the engine to reach 1500 rpm each time).

2. There should be a distinct movement in the EGR control valve diaphragm. If there is no movement check for:

a. Faulty vacuum hose to EGR valve.

b. Defective EGR diaphragm. Use a hand vacuum pump and test see if the EGR will hold vacuum.

c. Defective backpressure sensor.

d. Vacuum hose leaks.

EGR VALVE CLOSING

1. With the engine idling at normal operating temperature, use a protective glove and manually depress the EGR valve diaphragm. This should cause an immediate drop in engine rpm and indicate the EGR passages are clear,

2. If there is no drop in rpm and the engine is idling properly, check for a restricted passage between the EGR valve and the intake manifold. Clean as necessary.

3. If the engine idles improperly and the rpm is not greatly affected, check for a carbon-fouled EGR valve. Clean or replace as necessary.

THERMAL VACUUM SWITCH

See Figure 14

1. With the engine cold and ambient air temperature in the air cleaner below 40°F (4°C), disconnect the vacuum hoses from the TVS (located on the air cleaner).

2. Connect a hand vacuum pump to the inner port and apply vacuum.

3. Vacuum should be maintained at air cleaner intake temperatures below 40°F (4°C). If vacuum is not held, check to see that temperature is below 40°F (4°C). If so, replace the TVS.

4. Start the engine and warm to normal operating temperature. With an air cleaner intake temperature above 55°F (13°C), the switch should not hold vacuum. If vacuum is held, check to see that temperatures are above 55°F (13°C). If so, replace the TVS.

➡Temperatures are nominal values and the actual switching temperature may vary slightly.

Catalytic Converter

The catalytic converter is a muffler like device inserted in the exhaust system. Exhaust gases flow through the converter where a chemical change takes place, reducing carbon monoxide and hydrocarbons to carbon dioxide and water. The catalysts promoting this reaction are platinum and palladium coated beads of alumina. Because of the chemical reaction which takes place inside the converter, the temperature during operation is much higher than the exhaust gases when they leave the engine. An improperly adjusted carburetor or ignition problem (which would permit unburned fuel to enter the converter) could produce excessive heat, resulting in bulging or other distortion of the converter's shape. If the converter is heat damaged and must be replaced, the ignition or fuel system problem should be corrected first.

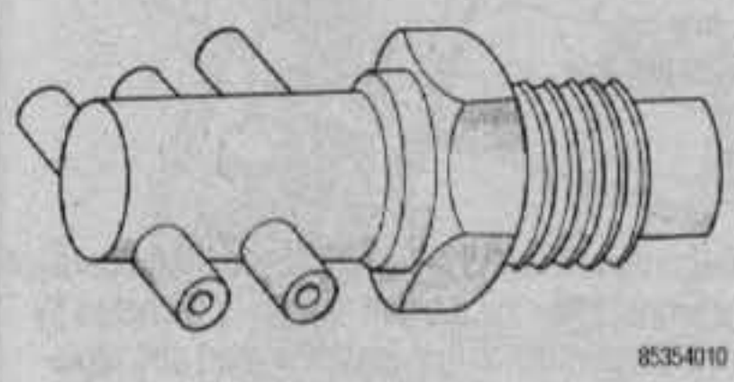

Fig. 12 EGR CTO function valve—1987–90 with the 4.2L engine

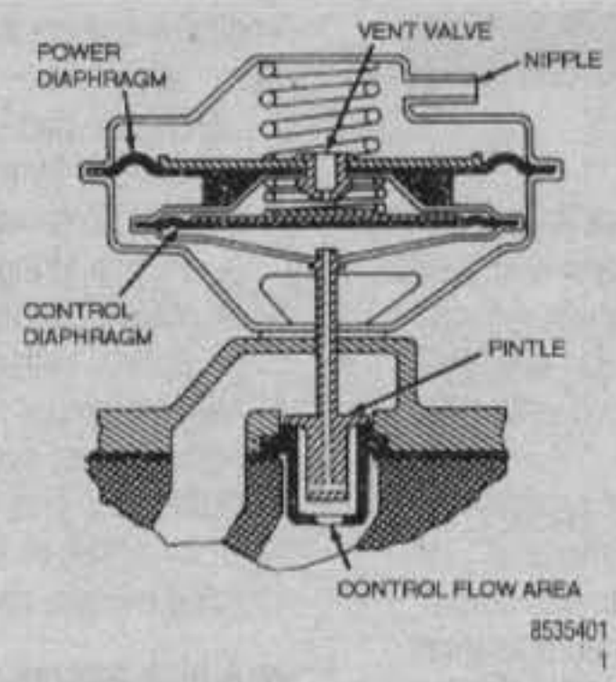

Fig. 13 Cross-sectional view of an EGR valve—1987–90 with the 4.2L engine

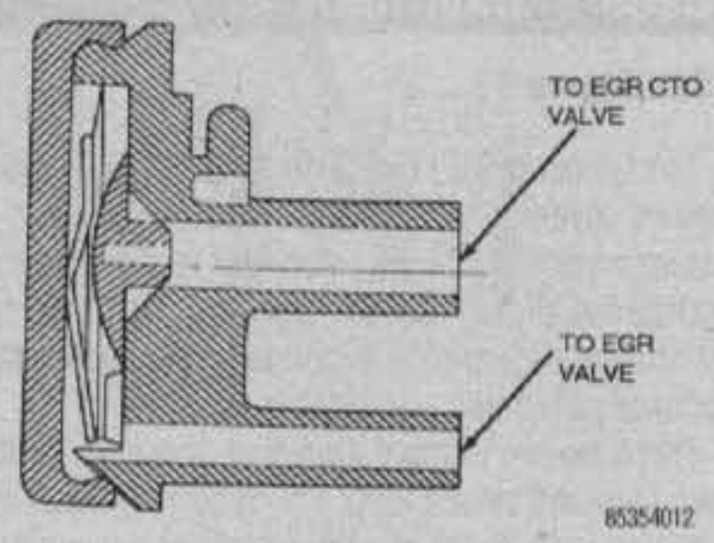

Fig. 14 EGR valve TVS—1987–90 with the 4.2L engine

Evaporative Canister

The evaporative emission control system prevents the release of unburned hydrocarbons, present in gasoline or gasoline vapor, into the atmosphere. When pressure in the fuel tank is below 3 psi (21 kPa), the pressure relief/rollover valves open allowing fuel vapors to flow to the evaporative canister where they are absorbed by a charcoal mixture. This prevents excessive pressure build-up in the fuel system. Most canisters are equipped with a calibrated orifice at the inlet to the canister.

The evaporative canister is mounted to the passenger side frame rail. Inlet ports on the canister are connected to the rollover/pressure relief valves, the air cleaner, and the fuel tank vent through hoses and tubes.

Canister purge operation is activated by the purge shutoff switch. An air cleaner venturi provides the vacuum to open the switch which allows vapors collected in the canister to be drawn into the airstream. The vapors then pass through the intake manifold and are burned in the combustion process.

Pressure/Vacuum Fuel Tank Filler Cap

The fuel filler cap is equipped with a two-way relief valve that is closed during normal operation of the vehicle. The relief valve is calibrated to open only when conditions equal or exceed 1.5 psi (10 kPa) of pressure or 1.8 in. Hg (6 kPa) of vacuum. When the vacuum or pressure is relieved, the valve returns to the closed position.

Pressure Relief/Rollover Valve

See Figures 15 and 16

The fuel tanks of all vehicles are equipped with two pressure relief/rollover valves. The valves relieve fuel tank pressure and prevent fuel flow through the fuel tank vent hoses in the event of vehicle rollover.

The valves consist of a plunger, spring, orifice and guide plate. The valve is normally open allowing fuel vapor to vent to the canister. If the bottom of the plunger is contacted by sloshing fuel, the plunger seats in the guide plate preventing fuel from reaching the canister.

If the vehicle should roll over, the valve is inverted and the plunger is forced against the guideplate, preventing fuel from flowing through the vent tube.

REMOVAL & INSTALLATION

1. Disconnect the battery negative cable.

CAUTION

If the engine has been run recently, allow it to thoroughly cool in order to prevent a fire hazard with fuel contacting hot exhaust system components.

2. Remove the fuel filler cap.

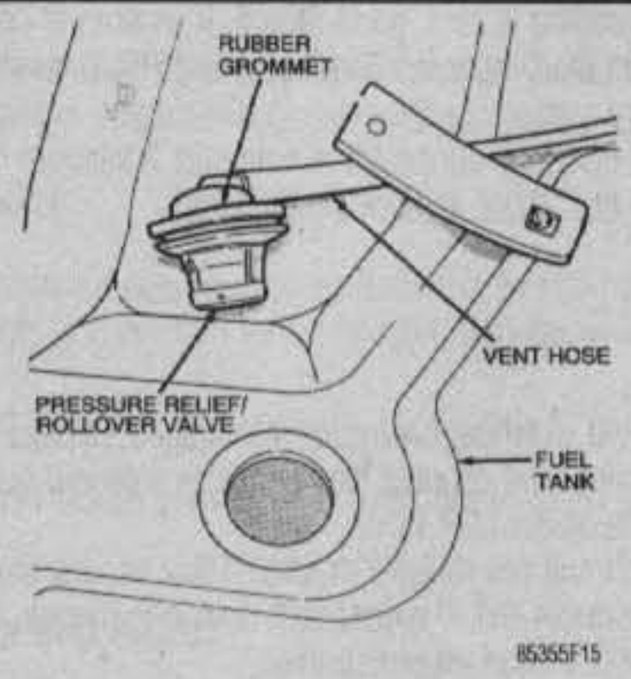

Fig. 15 Pressure relief/rollover valve location

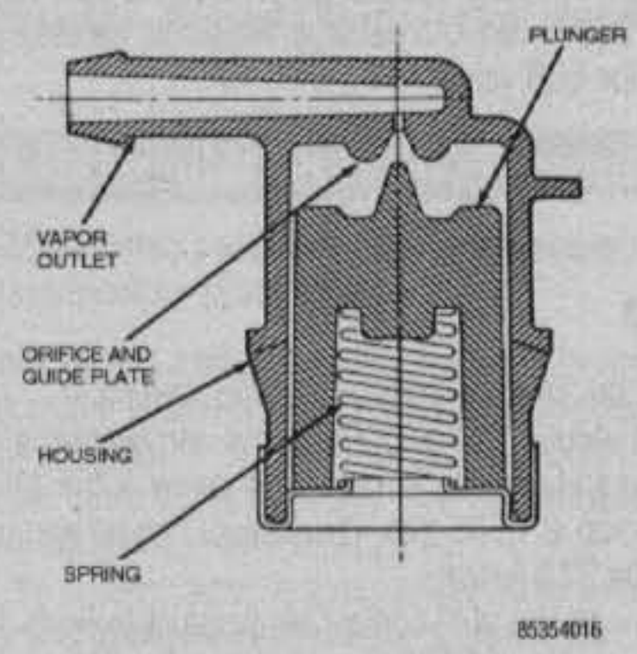

Fig. 16 Pressure relief/rollover valve operation

3. On 1991–95 vehicles, which are equipped with Multi–Port Fuel Injection (MFI), the fuel system is under constant pressure and MUST be released properly. Please refer to the Multi–Port Fuel Injection (MFI) section of Chapter 5 and follow the Fuel Pressure release procedure.

DO NOT allow fuel to spill on the intake or exhaust manifolds or any hot component. Use rags to absorb any spilled fuel and dispose of the rags properly.

4. Drain the fuel tank dry using a siphon pump.
5. Raise and support the vehicle safely.
6. Remove the fuel tank. For details, please refer to the procedure in Section 5.
7. The rollover valve is seated in a grommet. Pry one side of the valve up and twist to remove the grommet from the tank.
8. Installation is the reverse of removal.
9. Start vehicle and check for leaks.

COMPUTERIZED EMISSION CONTROL (CEC) FEEDBACK SYSTEM

General Information

See Figure 17

The Computerized Emission Control (CEC) system is used on all 4.2 L engines covered by this manual. The CEC system is a carbureted fuel feedback system, meaning that the carburetor receives electronic control signals to help regulate the air/fuel mixture based on "feedback" from an exhaust gas oxygen sensor. The 4.2L engine is normally equipped with a model BBD two-venturi, feedback carburetor.

There are two primary modes of operation for the CEC feedback system; open loop and closed loop. The system operates in the open loop mode of operation (or a variation of it) whenever the engine operating conditions do not meet the programmed criteria for closed loop operation. In open loop operation, the oxygen sensor data is not accepted by the system, instead, the air/fuel mixture is maintained at a programmed ratio that is dependent upon the type of engine operation involved. The following conditions involve open loop operation:

- Engine start-up
- Coolant temperature too low
- Oxygen sensor temperature too low
- Engine idling
- Wide open throttle (WOT)
- Battery voltage too low

When all input data meets the programmed criteria for closed loop operation, the exhaust gas oxygen content signal from the oxygen sensor is accepted by the computer. This results in an air/fuel mixture that is determined and regulated for optimum engine operating conditions and also will correct any pre-existing mixture condition which is too lean or too rich.

A high oxygen content in the exhaust gas indicates a lean air/fuel mixture, while a low oxygen content indicates a rich mixture. The optimum air/fuel mixture ratio is 14.7:1.

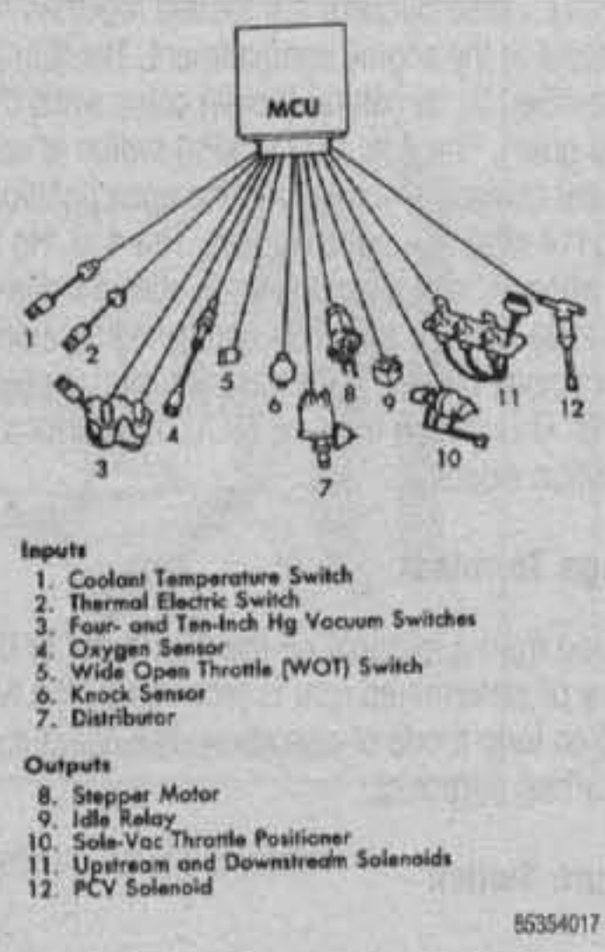

Fig. 17 CEC fuel feedback system components—4.2L engine

COMPONENTS

Micro Computer Unit (MCU)

See Figure 18

The Micro Computer Unit (MCU) is the heart of the CEC system. The MCU receives signals from various engine sensors to constantly monitor the engine operating conditions. It then makes adjustments, based on this information, in order to achieve the optimum performance and economy with a minimum of engine emissions. The MCU monitors the oxygen sensor voltage and, based upon the mode of operation, generates an output control signal for the carburetor stepper motor or mixture control solenoid. If the system is in the closed loop mode of operation, the air/fuel mixture will vary according to the oxygen content in the exhaust gas and engine operating conditions. If the system is in the open loop mode of operation, the air/fuel mixture will be based on a predetermined ratio that is dependent on engine rpm. In addition, the MCU generates output signals to control ignition timing and engine idle speed, PCV flow and Pulse Air System operation.

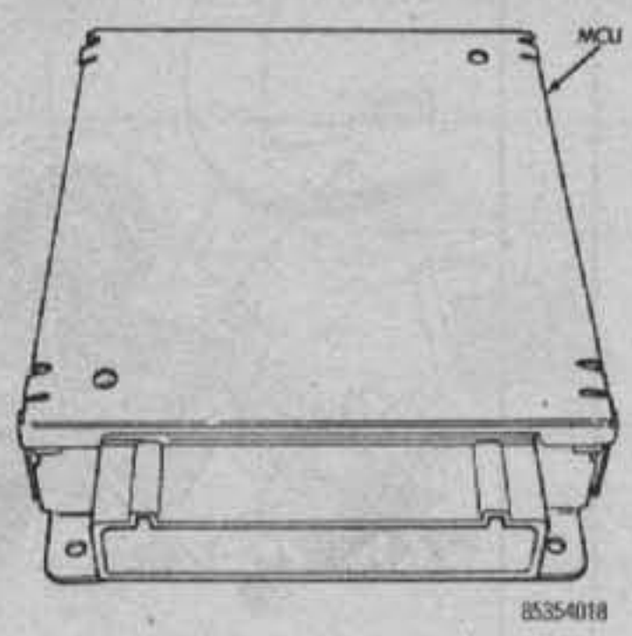

Fig. 18 The Micro Computer Unit (MCU)

Idle Relay and Solenoid

See Figure 19

The idle relay is energized by the MCU (by providing a ground for the relay) in order to control the vacuum actuator portion of the Sole-Vac throttle positioner. The relay energizes the idle solenoid, which allows vacuum to operate the Sole-Vac vacuum actuator. This, in turn, opens the throttle and increases engine speed. The idle solenoid is located on a bracket on the left front inner fender panel and can be identified by the red connecting wires.

Sole-Vac Throttle Positioner

See Figure 20

The Sole-Vac throttle positioner is attached to the carburetor. The unit consists of a closed throttle switch, a holding solenoid and a vacuum actuator. The holding solenoid maintains the throttle position, while the vacuum actuator provides additional engine idle speed when accessories such as the air conditioner or rear window defogger are in use. The vacuum actuator is also activated during deceleration, or any time the steering wheel is turned to the full stop position on vehicles equipped with power steering.

Upstream and Downstream Air Switch Solenoids

See Figure 21

The upstream and downstream solenoids of the pulse air system distribute air to the exhaust pipe and catalytic converter. Both solenoids are energized by the MCU to route air into the exhaust pipe at a point after the oxygen sensor. When energized, the downstream solenoid routes air into the second bed of the dual-bed catalytic converter. This additional air reacts with the exhaust gases to further reduce engine emissions.

The solenoids are located on a bracket attached to the left inner front fender panel. The idle solenoid is also located on this same bracket.

PCV Shutoff Solenoid

See Figure 22

The positive crankcase ventilation shutoff solenoid is installed in the PCV valve hose and is energized by the MCU to turn off the crankcase ventilation system when the engine is at idle speed. An anti-diesel system, consisting of an anti-diesel relay and a delay relay, prevents engine run-on by preventing air from entering below the throttle plate whenever the ignition is switched **OFF**. This is accomplished by momentarily energizing the PCV valve solenoid whenever the ignition is switched to the **OFF** position.

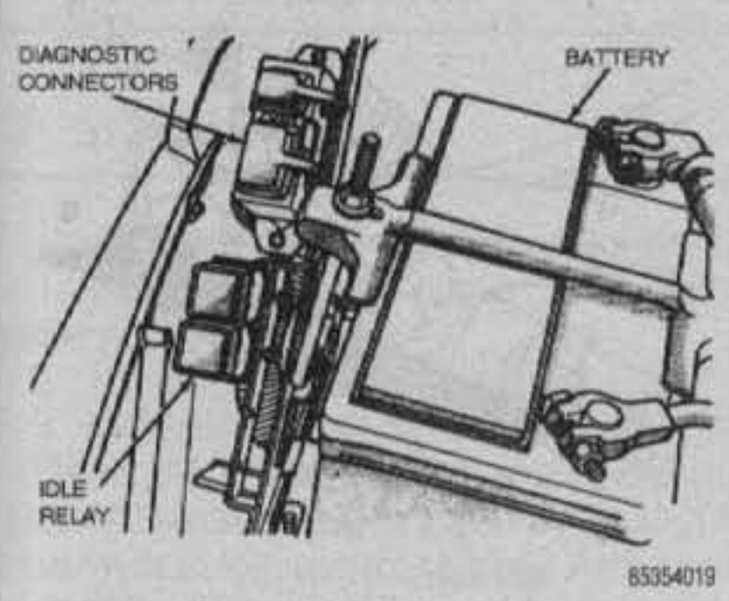

Fig. 19 Idle relay location

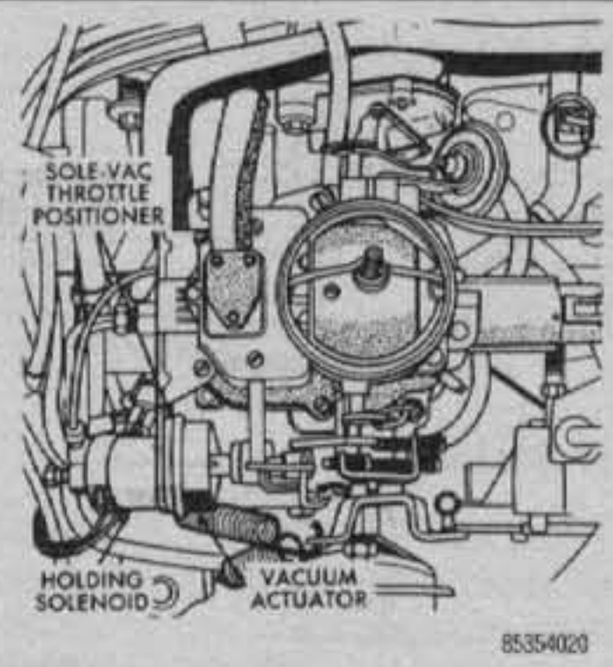

Fig. 20 Sole-Vac throttle positioner location

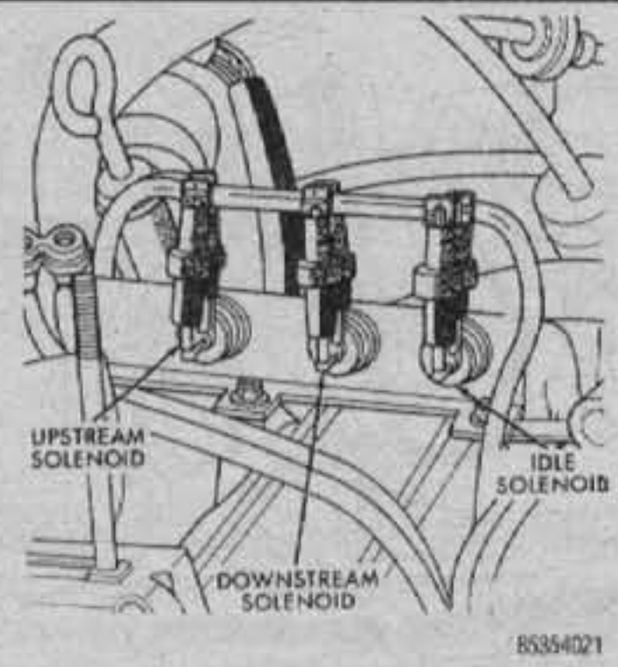

Fig. 21 Idle, upstream and downstream solenoids location

Intake Manifold Heater Switch

See Figure 23

The intake manifold heater switch is located in the manifold and is controlled by engine coolant temperature. Below 160°F (71°C) the switch activates the intake manifold heater to improve fuel vaporization. The switch is not controlled by the MCU and does not provide input information to it. The switch does however help reduce exhaust emissions during engine warm-up through the improved fuel vaporization.

Oxygen Sensor

See Figure 24

This component of the system provides a variable voltage signal (at a level of millivolts) for the Micro Computer Unit (MCU) that is proportional to the oxygen content in the exhaust gas. Various other data sensors and inputs are used along with the oxygen sensor signal to supply the MCU with the necessary engine operation information.

Knock Sensor

See Figures 25 and 26

The knock sensor is a tuned piezoelectric crystal transducer that is threaded into the intake manifold. The knock sensor provides the MCU with an electrical signal that is created by vibrations which correspond to its center frequency (5550 Hz). Vibrations from engine knock (detonation) cause the crystal inside the sensor to vibrate and produce an electrical signal that is sent to the MCU. The control unit then retards the ignition timing to eliminate the knock condition.

Vacuum Switches

See Figure 27

Two vacuum-operated electrical switches (ported and manifold) are used to detect and send throttle position data to the MCU for idle (closed), partial and wide open throttle (WOT). These switches are located together in a bracket attached to the dash panel in the engine compartment. The 4 in. Hg (14 kPa) vacuum switch can be identified by its natural (beige) color, while the 10 in. Hg (34 kPa) vacuum switch is green. The 4 in. Hg (14 kPa) switch is controlled by ported vacuum and its electrical contact is normally in the open position. When the vacuum exceeds 4 in. Hg (14 kPa), the switch closes. The 4 in. Hg (14 kPa) vacuum switch tells the MCU when either a closed or wide open throttle condition exists.

The 10 in. Hg (34 kPa) vacuum switch is controlled by manifold vacuum. Its electrical contact is normally closed; if the vacuum level exceeds 10 in. Hg (34 kPa), the switch opens. This switch tells the MCU that either a partial or medium throttle condition exists.

Engine RPM Voltage Terminal

A voltage is supplied from a terminal on the distributor to the MCU. Until a voltage equivalent to a predetermined rpm is received by the MCU, the fuel system remains in the open loop mode of operation. The result is a fixed rich air/fuel mixture for starting purposes.

Coolant Temperature Switch

See Figure 28

The temperature switch supplies engine coolant temperature data to the MCU. Until the engine is sufficiently warmed (above 135°F/57°C), the system remains in the open loop mode of operation (i.e., a fixed air/fuel mixture based upon engine rpm).

Thermal Electric Switch

See Figure 29

The thermal electric switch is located inside the air cleaner and is used to sense the incoming air temperature. The signal then indicates a cold weather start-up condition to the MCU when the air temperature is below 50°F (10°C). Above 65°F (18°C), the switch opens to indicate a normal engine start-up condition to the MCU.

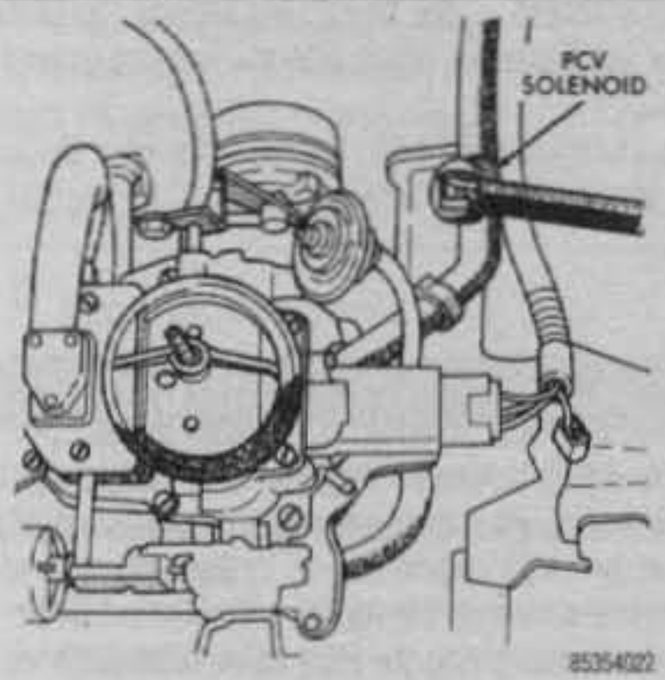

Fig. 22 PVC Solenoid location

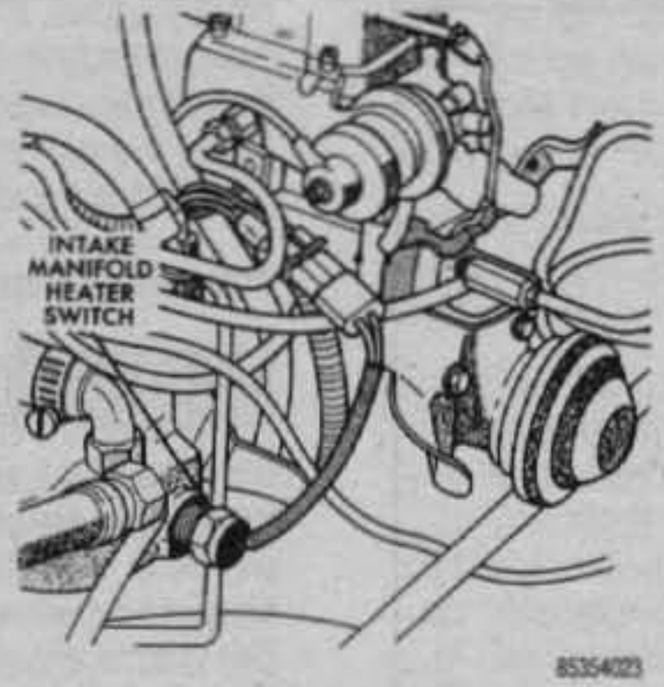

Fig. 23 Intake manifold heater switch

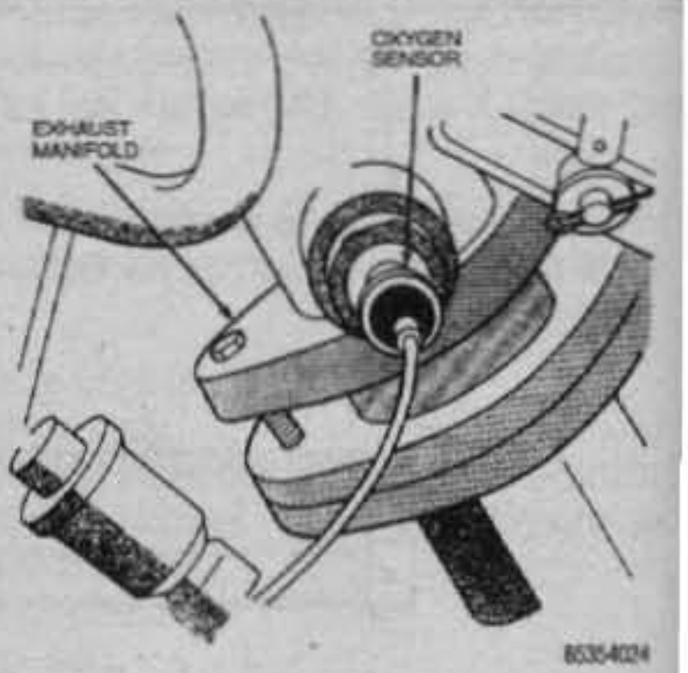

Fig. 24 Oxygen sensor

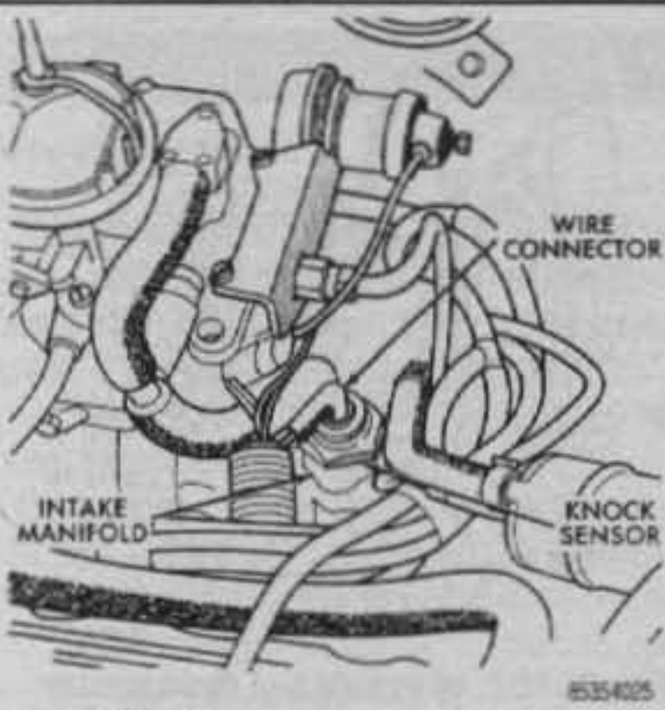

Fig. 25 Knock sensor

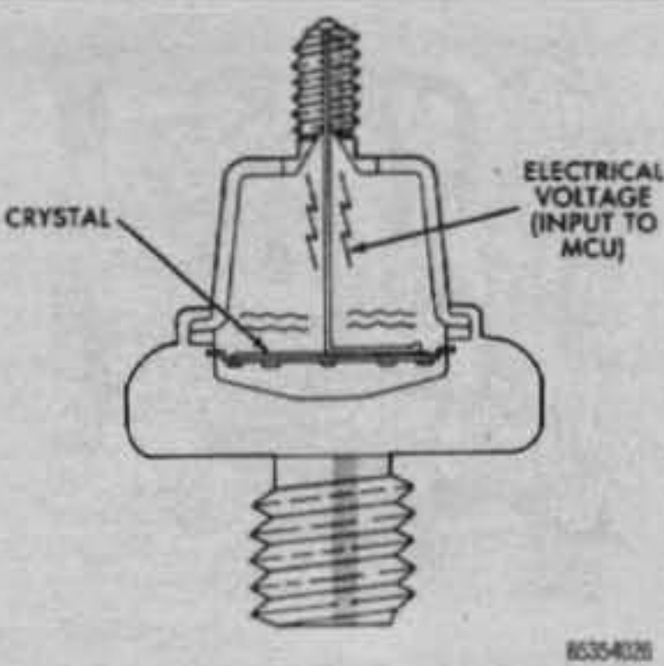

Fig. 26 Knock sensor operation

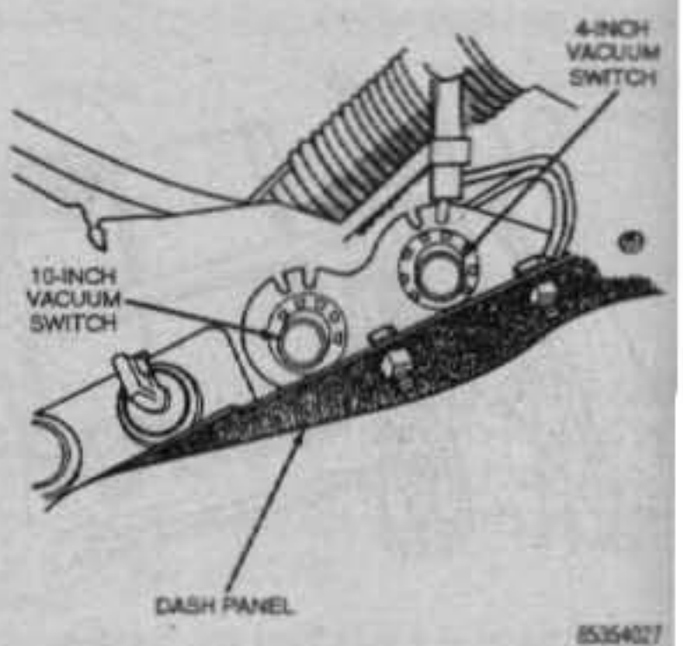

Fig. 27 Vacuum switches

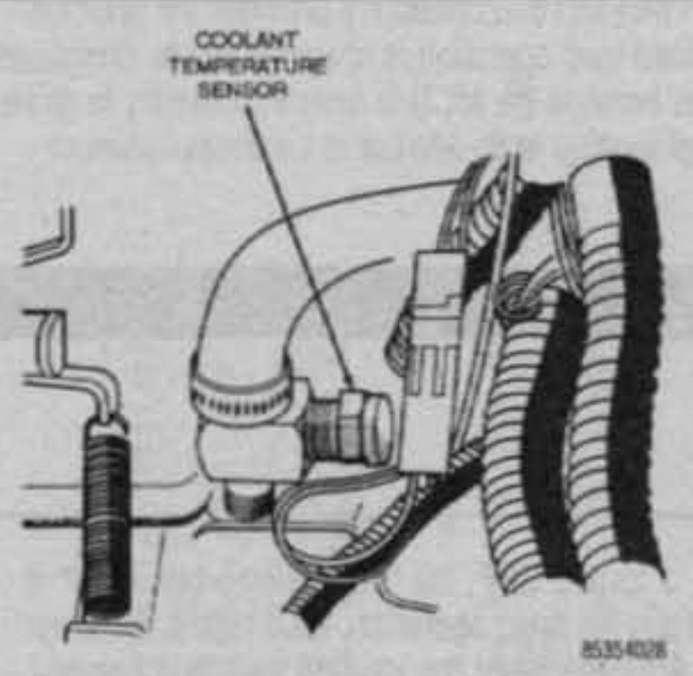

Fig. 28 Coolant temperature sensor

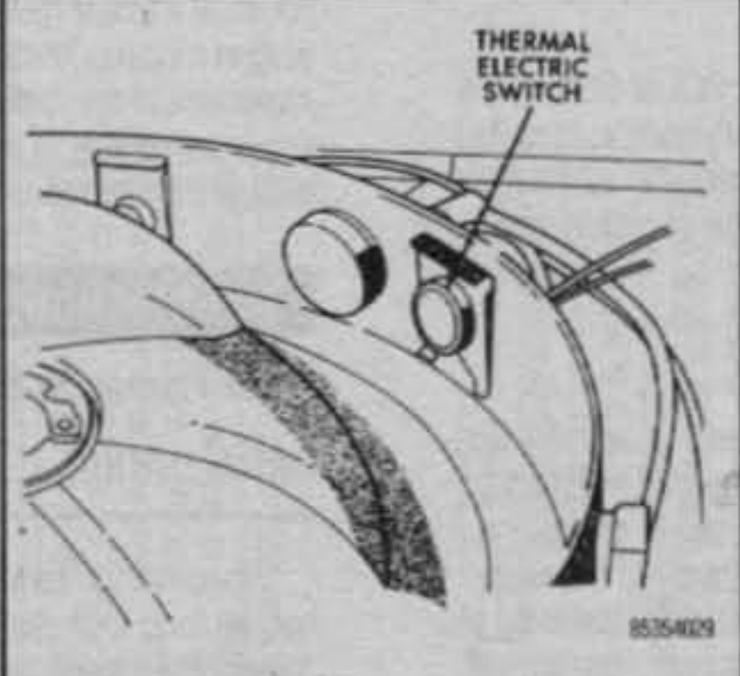

Fig. 29 Thermal electric switch

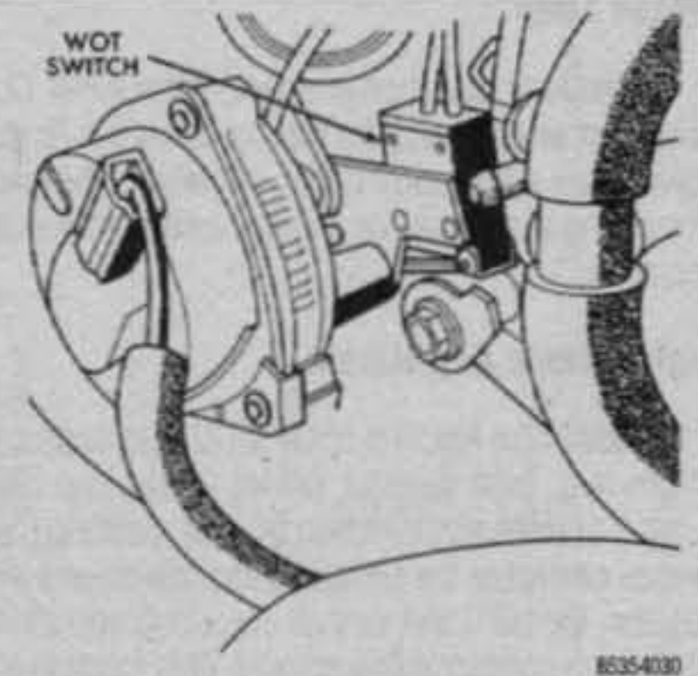

Fig. 30 WOT switch

Wide Open Throttle (WOT) Switch

See Figure 30

The wide open throttle switch is attached to the base of the carburetor by a mounting bracket. It is a mechanically operated electrical switch that is controlled by the physical position of the throttle. When the throttle is placed in the wide open position, a cam on the throttle shaft actuates the switch about 15° before the wide open position is reached. This tells the MCU that a full-throttle demand is underway.

Altitude Jumper Wire Connector

See Figure 31

The altitude jumper wire connector is located next to the MCU. A jumper wire is installed in the connector to provide the MCU with an indication that the vehicle is being operated above a 4000 ft. elevation (high altitude operation). Unless operating the vehicle in a high altitude area, the connector should have no jumper wire installed. If the vehicle is to be operated in a designated high altitude area, a jumper wire must be installed to assure proper engine and emission performance.

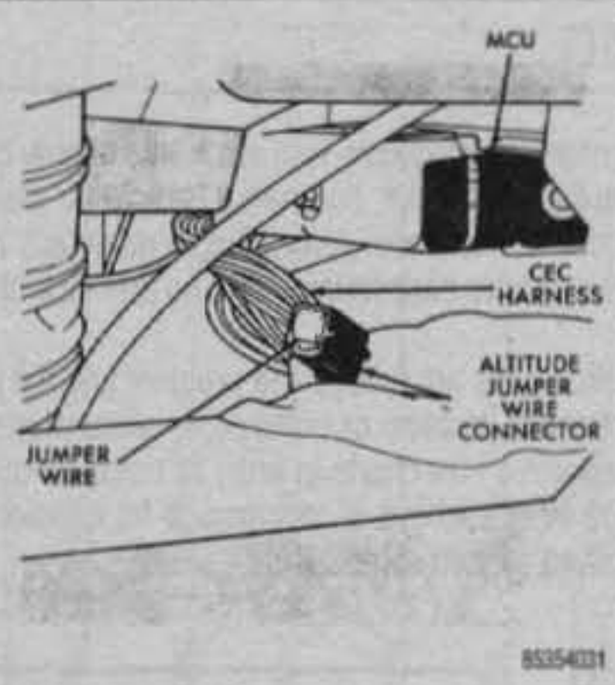

Fig. 31 Altitude jumper wire

CEC SYSTEM OPERATION

The open loop mode of operation occurs during any of the following conditions:

1. Starting the engine, engine is cold or temperature of the air inside the air cleaner is cold.
2. Engine is at idle speed.
3. Carburetor is either at or near wide open throttle (WOT).

Should any of these conditions occur, the carburetor fuel metering pins are driven to a predetermined (programmed) position for each condition. This is known as open loop operation because the positions are predetermined and no feedback results are used. There are five open loop operating conditions which are characterized by the metering pins being driven to a position where they are stopped and remain stationary.

Each system operation condition (except closed loop) has a specific metering pin position and because more than one of the operation selection conditions can be present at one time, the MCU is programmed with a priority ranking for the operations. The MCU complies with conditions that pertain to the operation having the highest priority. The priorities are as described as follows:

Cold Weather Engine Start-Up and Operation

If the air temperature inside the air cleaner is below the calibrated value of the Thermal Electric Switch (TES), the stepper motor is positioned a predetermined number of steps richer than the initialization position and the air injection is diverted upstream. Lean air/fuel mixtures are not permitted for a preset period following a cold weather start-up.

Open Loop 1 (OL1)

Open Loop 1 will be selected if the air temperature inside the air cleaner is above a calibrated value, open loop 2, 3, or 4 is not selected, and if the engine coolant temperature is below the calibrated value. The OL1 mode operates in lieu of normal closed loop operation during a cold engine operating condition. If OL1 operation is selected, one of two predetermined stepper motor positions are chosen, dependent upon whether the altitude circuit (lean limit) jumper wire is installed. With each engine start-up, a start-up timer is activated. During this interval, if the engine operating conditions would otherwise trigger normal closed loop operation, OL1 operation is selected.

Open Loop 2 (OL2)/Wide Open Throttle (WOT)

Open Loop 2 is selected whenever the air temperature inside the air cleaner is above the calibrated value of the Thermal Electric Switch (TES) and the WOT switch has been engaged. When the Open Loop 2 mode is selected, the stepper motor is driven to a calibrated number of steps richer than initialization and the air control valve switches air downstream. However, if the "lean limit" circuit (with altitude jumper wire) is being used, the air is instead directed upstream. The WOT timer is activated whenever OL2 is selected and remains active for a preset period of time. The WOT timer remains inoperative if the "lean limit" circuit is being used.

Open Loop 3 (OL3)

Open Loop 3 is selected when the ignition advance vacuum falls below a predetermined level. When the OL3 mode is selected, the engine rpm is also determined. If the rpm (tach) voltage is greater than the calibrated value, an engine deceleration condition is assumed to exist. If the rpm (tach) voltage is less than the calibrated value, an engine idle speed condition is assumed to exist.

Open Loop 4 (OL4)

Open Loop 4 is selected whenever manifold vacuum falls below a predetermined level. During OL4 operation, the stepper motor is positioned at the initialization position. Air injection is switched upstream during OL4 operation. However, air is switch downstream if the extended OL4 timer is activated and if the "lean limit" circuit is not being used (without altitude jumper wire). Air is also switch downstream if the WOT timer is activated.

Closed Loop

Closed loop operation is selected after either OL1, OL2, OL3 or OL4 modes have been selected and the start-up timer has timed out. Air injection is routed downstream during closed loop operation. The predetermined lean air/fuel mixture ceiling is selected for a preset length of time at the onset of closed loop operation.

High Altitude Adjustment

An additional function of the MCU is to correct for a change in ambient conditions (e.g., high altitude). During closed loop operation the MCU stores the number of steps and direction that the metering pins are driven to correct the oxygen content of the exhaust. If the movements are consistently to the same position, the MCU will vary all open loop operation predetermined metering pin positions a corresponding amount. This function allows the open loop air/fuel mixture ratios to be "tailored" to the existing ambient conditions during each uninterrupted use of the system. This optimizes emission control and engine performance.

Closed Loop Operation

The CEC system controls the air/fuel ratio with movable air metering pins, visible from the top of the carburetor air horn, that are driven by the stepper motor. The stepper motor moves the metering pins in increments or small steps via electrical impulses generated by the MCU. The content of oxygen in the exhaust gas indicates the completeness of the combustion process, therefore, the MCU causes the stepper motor to drive the metering pins to a richer or leaner position in reaction to the voltage input from the oxygen sensor.

Because the oxygen sensor only reacts to oxygen, any air leak or malfunction between the carburetor and sensor may cause problems with the voltage output. This could be caused by a manifold air leak or malfunctioning secondary air check value. The engine operation characteristics never quite permit the MCU to compute a single metering pin position that constantly provides the optimum air/fuel mixture. Therefore, closed loop operation is characterized by continued movement of the metering pins because the MCU is forced constantly to make small corrections in the air/fuel mixture in an attempt to create an optimum air/fuel mixture ratio.

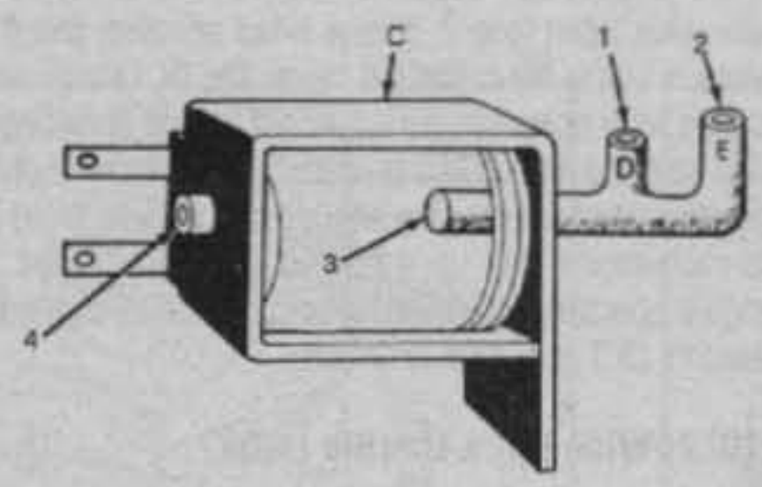

Fig. 32 Vacuum switch solenoid—4.2L engine

Troubleshooting

See Figures 32 thru 59

INITIALIZATION

When the ignition system is turned **OFF**, the MCU is also turned off. It has no long term memory circuit for prior operation. As a result, it has an initialization function that is activated when the ignition switch is turned **ON**.

The MCU initialization function moves the metering pins to the predetermined starting position by first driving them all the way to the rich end stop and then driving them in the lean direction a predetermined number of steps. No matter where they were before initialization, they will be at the correct position at the end of every initialization period. Because each open loop operation metering pin position is dependent on the initialization function, this function is the first test in the diagnostic procedure.

➡The CEC System should be considered as a possible source of trouble for engine performance, fuel economy and exhaust emission complaints only after normal tests that would apply to an automobile without the system have been performed.

PRELIMINARY TESTS

Before performing the Diagnostic Tests, other engine associated systems that can affect air/fuel mixture, combustion efficiency or exhaust gas composition should be tested for faults. These systems include:

1. Basic carburetor adjustments.
2. Mechanical engine operation (spark plugs, valves, rings, etc.).
3. Ignition system components and operation.
4. Gaskets (intake manifold, carburetor or base plate); loose vacuum hoses or fittings, or loose electrical connections.

DIAGNOSTIC TESTS

One of the most common problems with electronic engine control systems results not from a faulty component, but from a bad circuit which is caused by loose, dirty or corroded connections. Always begin diagnosis by checking all wiring and hoses from proper connections, routing and lack of physical damage.

If a visual inspection does not turn up the problem and the preliminary tests do not reveal a mechanical problem or some other cause of improper operation, proceed with the diagnostic flow charts in order to troubleshoot the condition. As necessary, refer to other sections of this manual for additional information or engine, fuel and ignition system components.

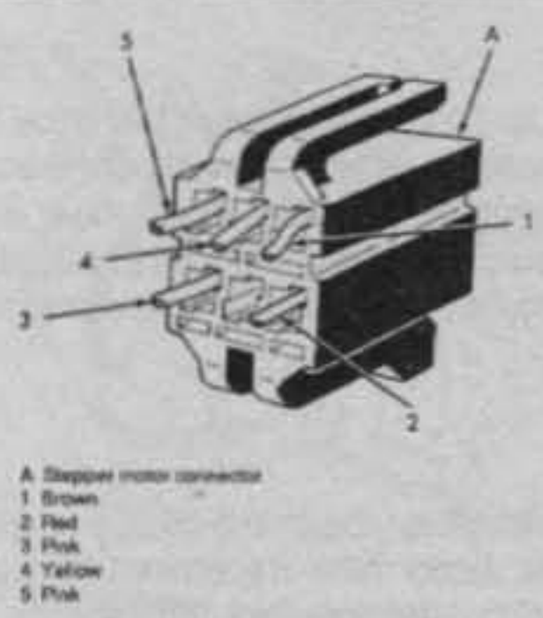

Fig. 33 Stepper motor connector—4.2L engine

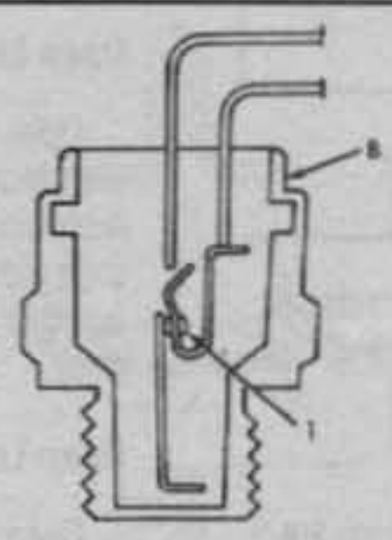

Fig. 34 Coolant temperature switch—4.2L engine

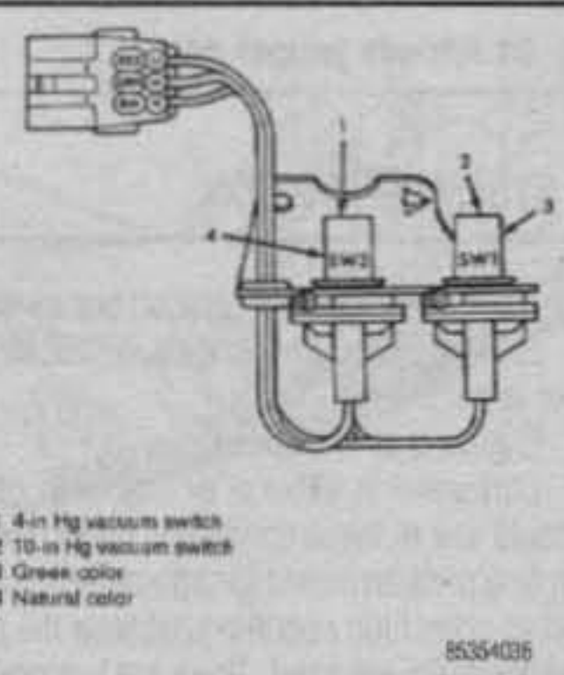

Fig. 35 4 and 10-inch vacuum switches—4.2L engine

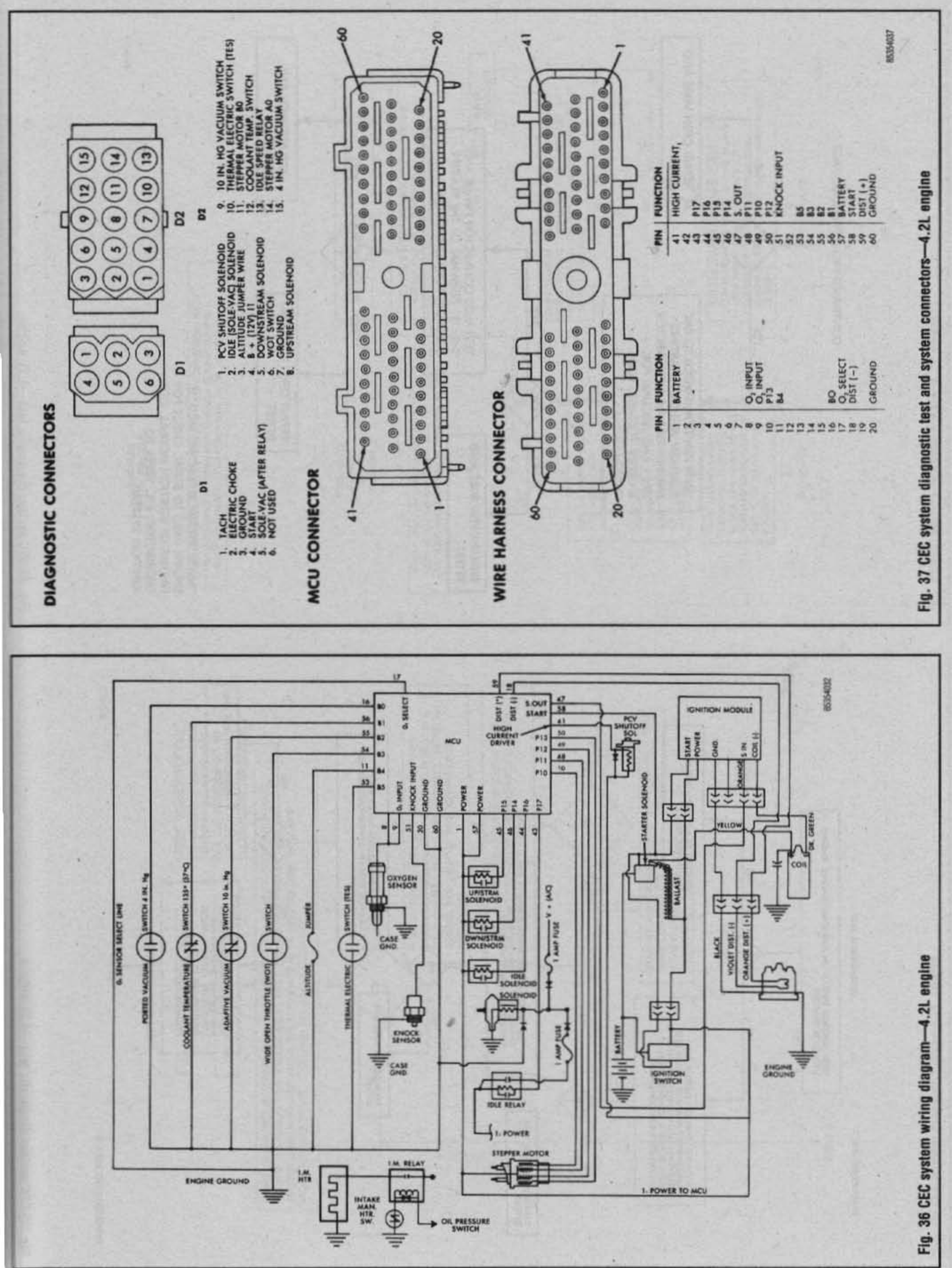

Fig. 36 CEC system wiring diagram—4.2L engine

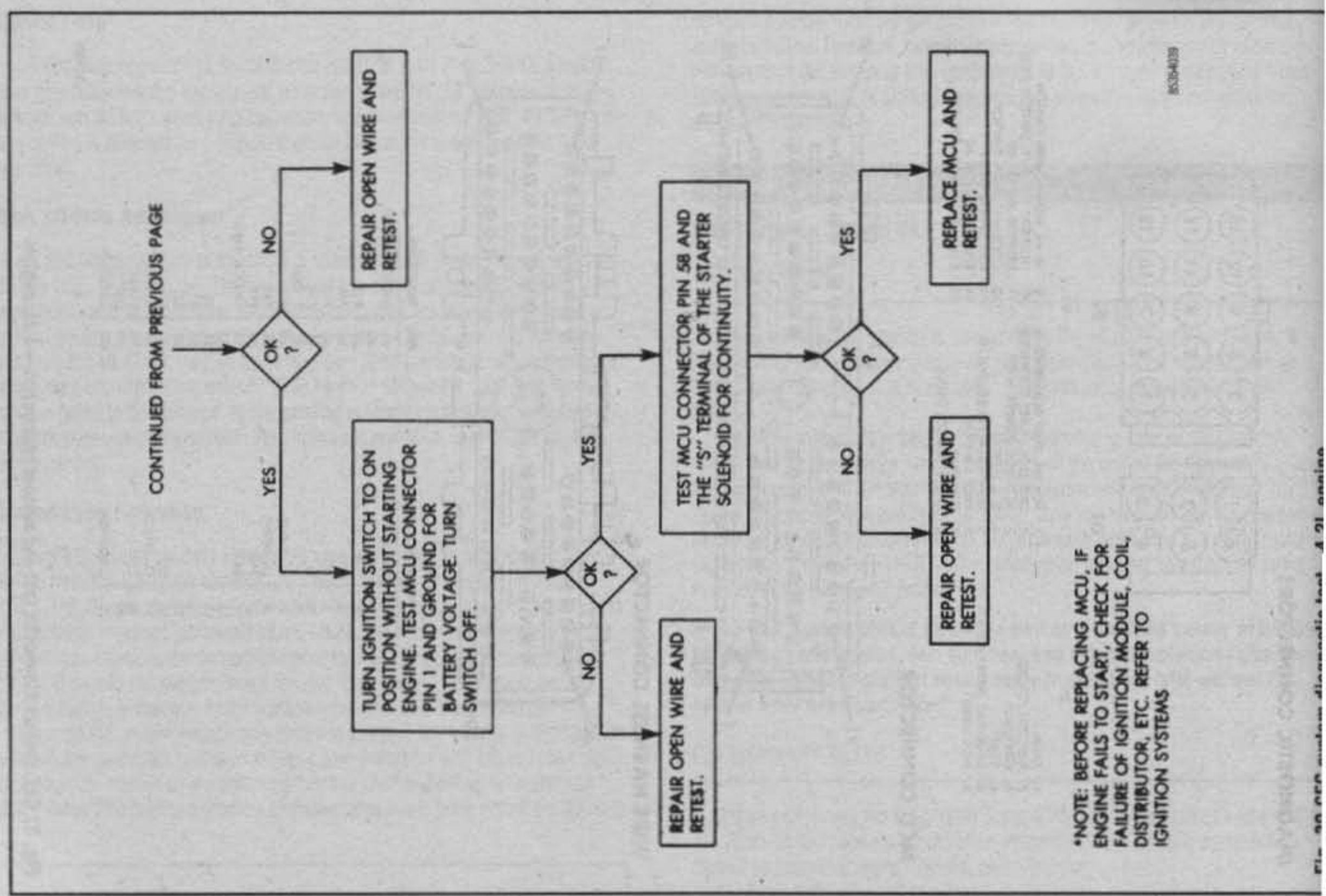
CONTINUED FROM PREVIOUS PAGE
OK ?
NO
REPAIR OPEN WIRE AND RETEST.
YES
TURN IGNITION SWITCH TO ON POSITION WITHOUT STARTING ENGINE. TEST MCU CONNECTOR PIN 1 AND GROUND FOR BATTERY VOLTAGE. TURN SWITCH OFF.
OK ?
YES
TEST MCU CONNECTOR PIN 58 AND THE "S" TERMINAL OF THE STARTER SOLENOID FOR CONTINUITY.
NO
REPAIR OPEN WIRE AND RETEST.
OK ?
YES
REPLACE MCU AND RETEST.
NO
REPAIR OPEN WIRE AND RETEST.
*NOTE: BEFORE REPLACING MCU, IF ENGINE FAILS TO START, CHECK FOR FAILURE OF IGNITION MODULE, COIL, DISTRIBUTOR, ETC. REFER TO IGNITION SYSTEMS

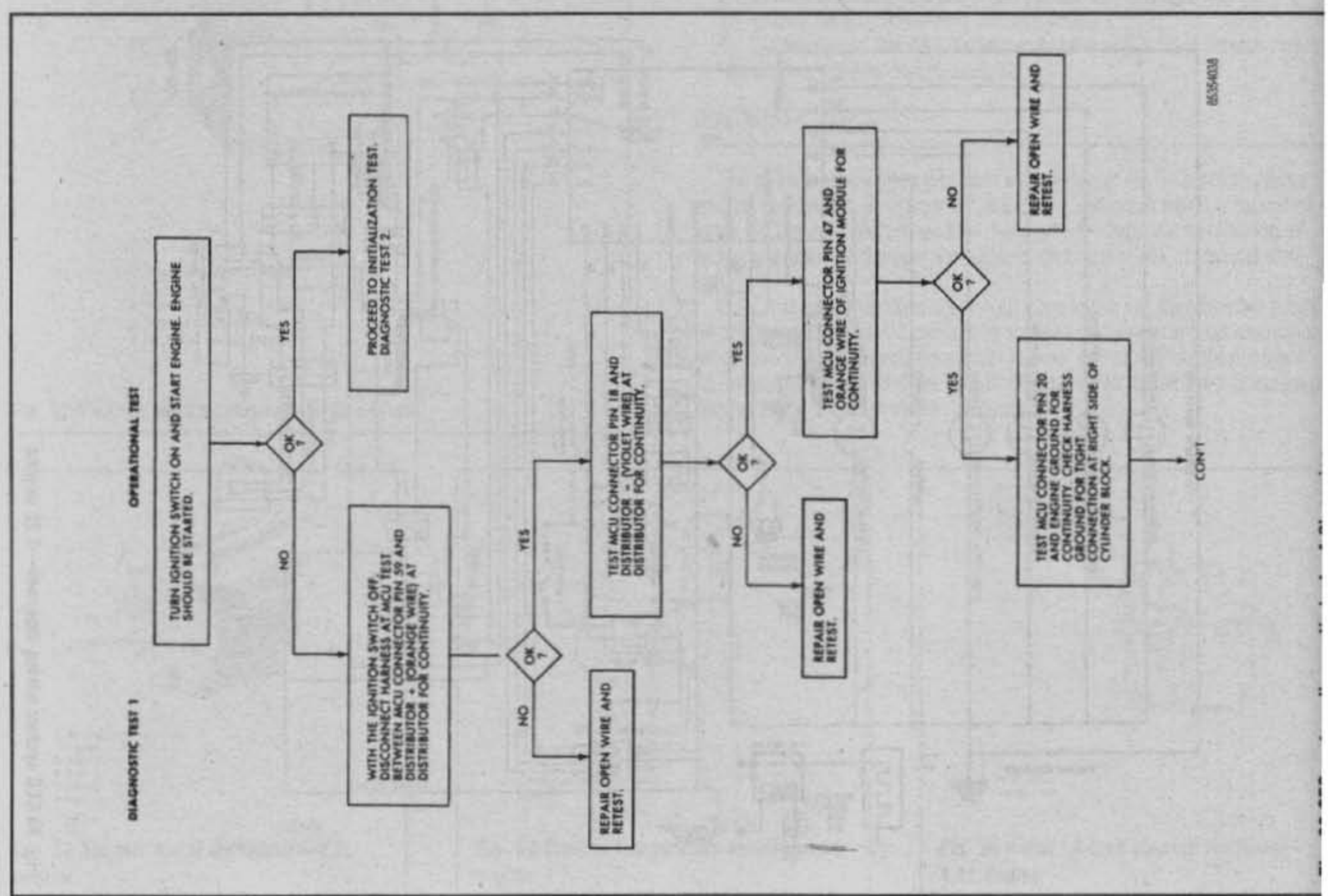
DIAGNOSTIC TEST 1
OPERATIONAL TEST
TURN IGNITION SWITCH ON AND START ENGINE. ENGINE SHOULD BE STARTED.
OK ?
YES
PROCEED TO INITIALIZATION TEST. DIAGNOSTIC TEST 2.
NO
WITH THE IGNITION SWITCH OFF, DISCONNECT HARNESS AT MCU TEST BETWEEN MCU CONNECTOR PIN 59 AND DISTRIBUTOR + (ORANGE WIRE) AT DISTRIBUTOR FOR CONTINUITY.
OK ?
YES
TEST MCU CONNECTOR PIN 18 AND DISTRIBUTOR - (VIOLET WIRE) AT DISTRIBUTOR FOR CONTINUITY.
NO
REPAIR OPEN WIRE AND RETEST.
OK ?
YES
TEST MCU CONNECTOR PIN 47 AND ORANGE WIRE OF IGNITION MODULE FOR CONTINUITY.
NO
REPAIR OPEN WIRE AND RETEST.
OK ?
NO
REPAIR OPEN WIRE AND RETEST.
YES
TEST MCU CONNECTOR PIN 20 AND ENGINE GROUND FOR CONTINUITY. CHECK HARNESS GROUND FOR TIGHT CONNECTION AT RIGHT SIDE OF CYLINDER BLOCK.
CON'T

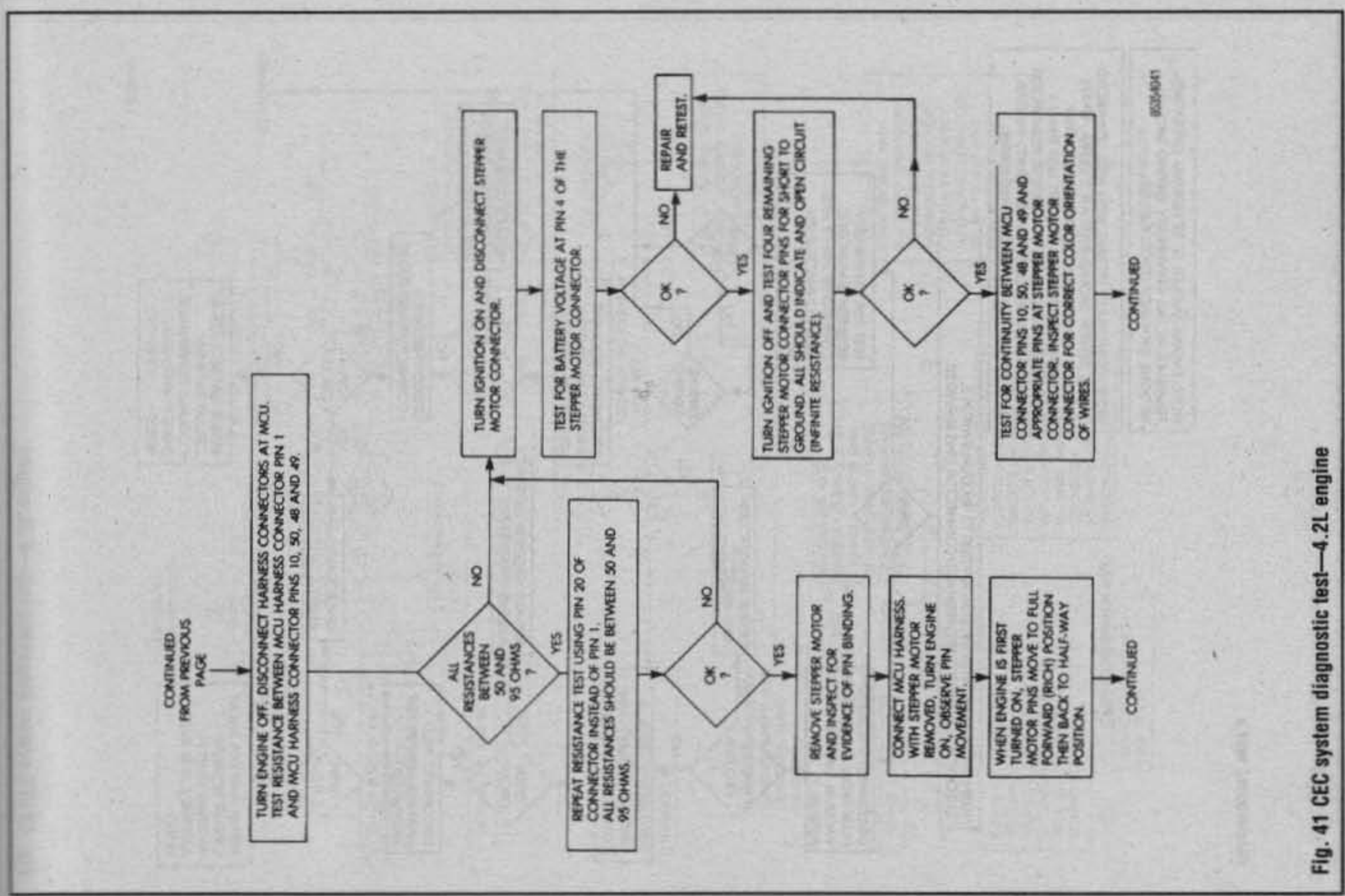

Fig. 41 CEC system diagnostic test—4.2L engine

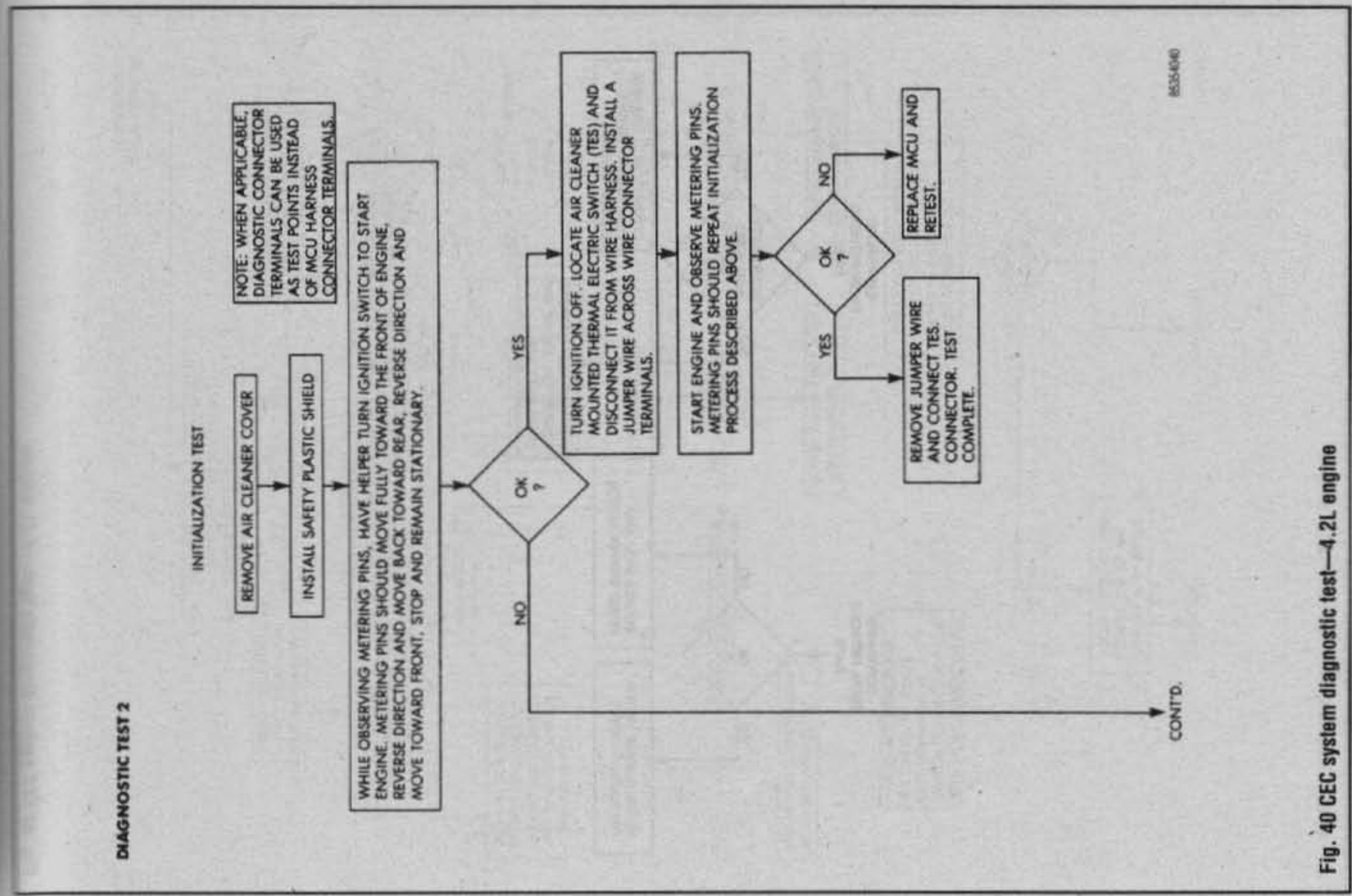

Fig. 40 CEC system diagnostic test—4.2L engine

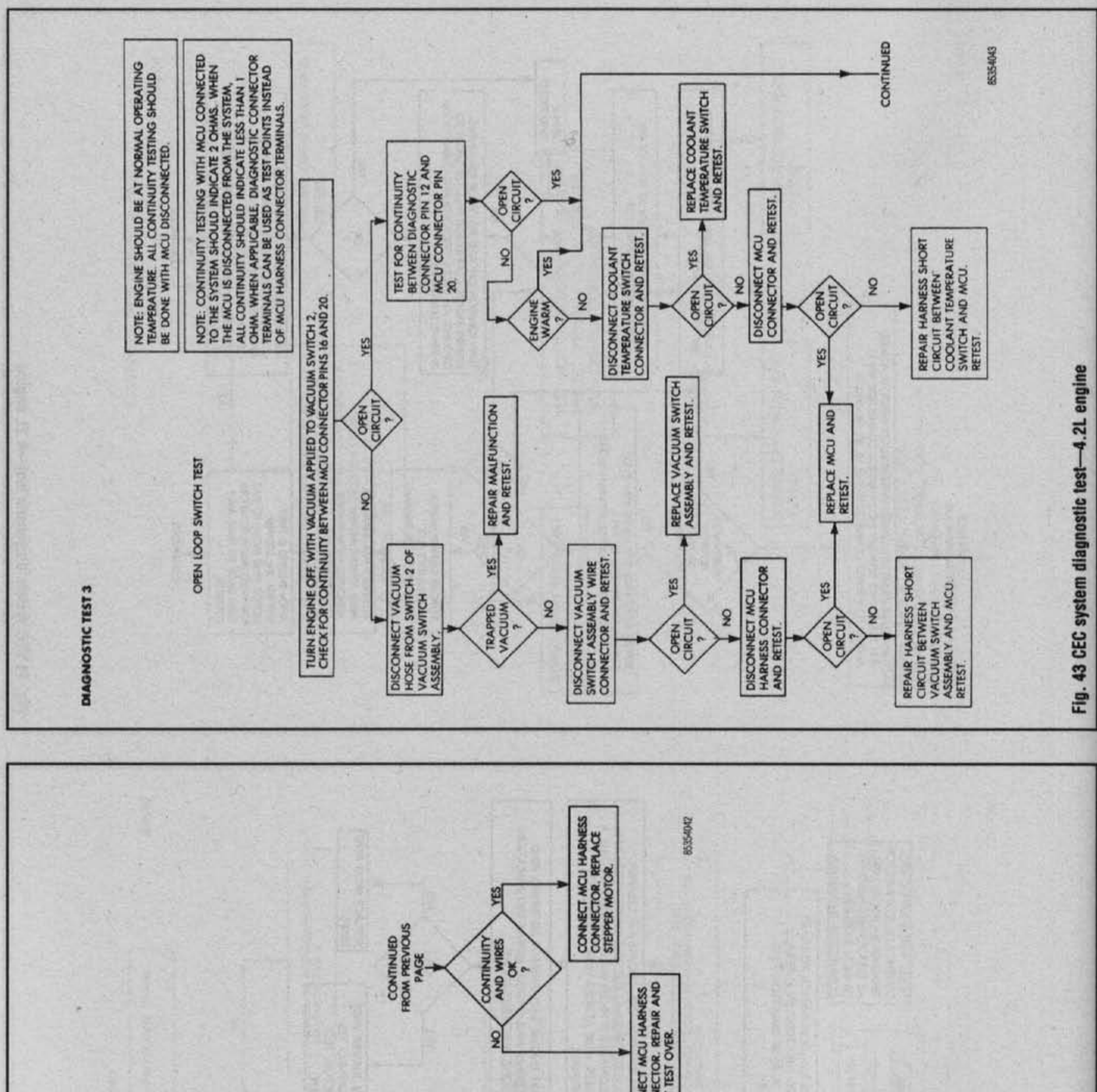

Fig. 43 CEC system diagnostic test—4.2L engine

Fig. 42 CEC system diagnostic test—4.2L engine

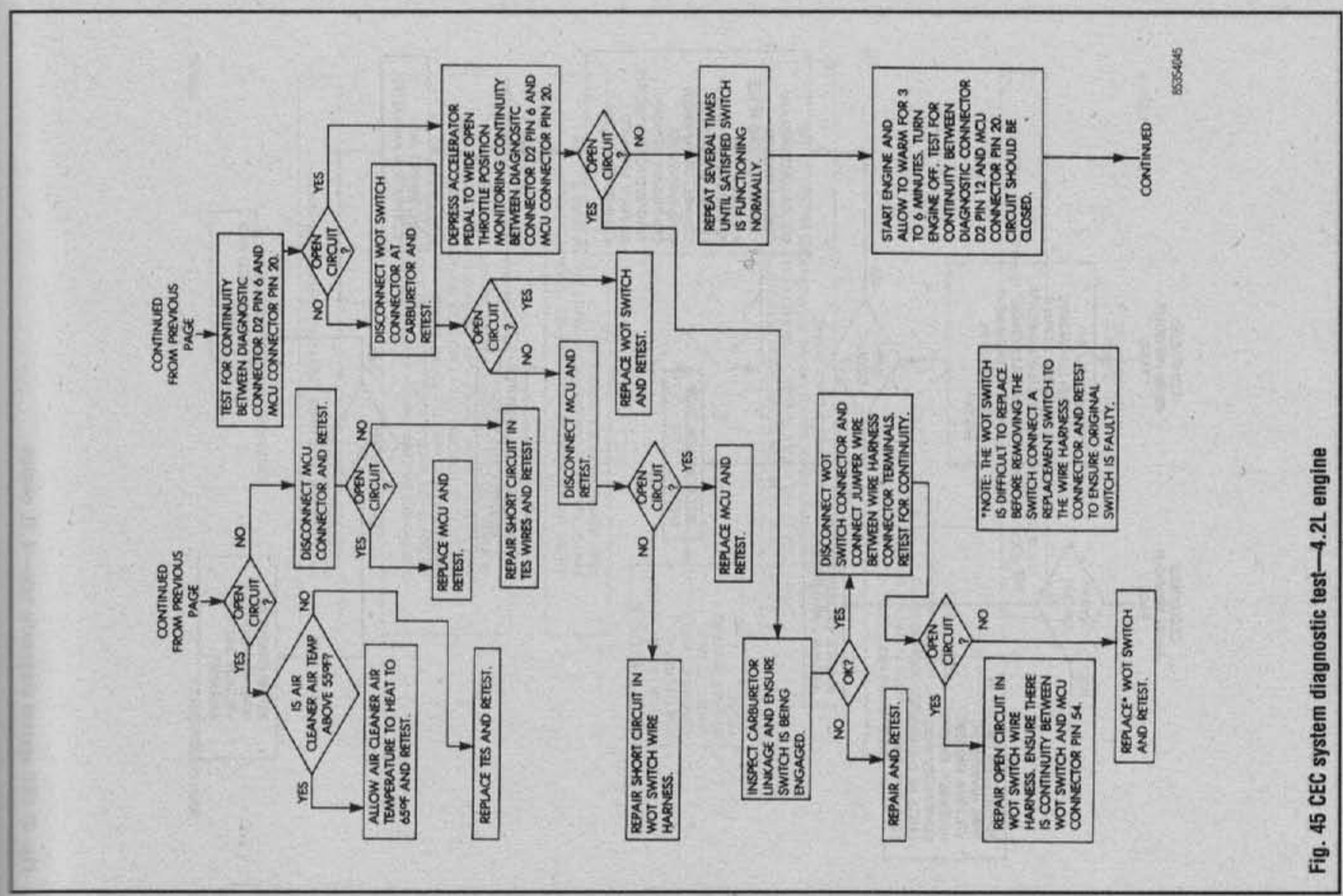

Fig. 45 CEC system diagnostic test—4.2L engine

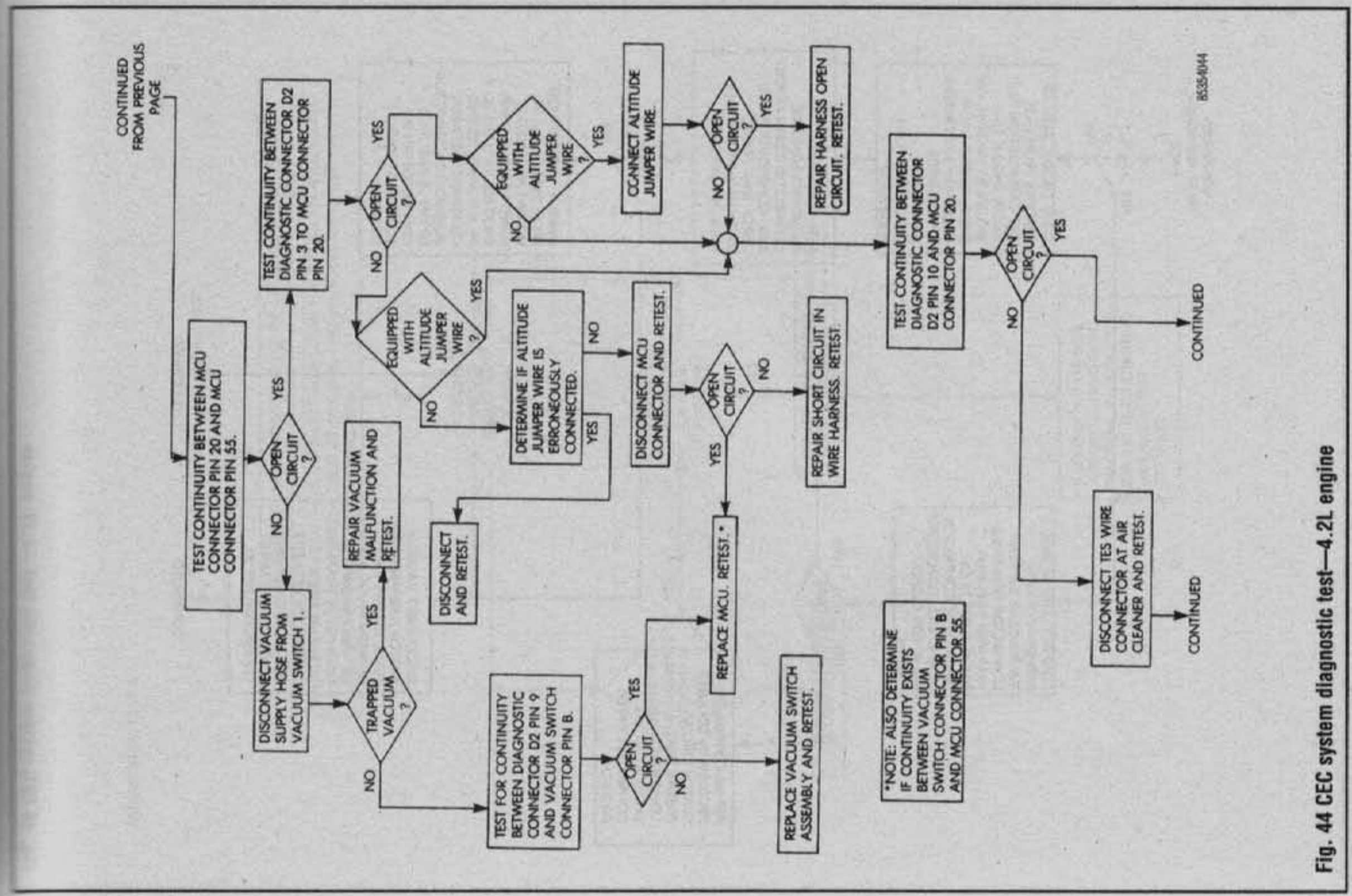

Fig. 44 CEC system diagnostic test—4.2L engine

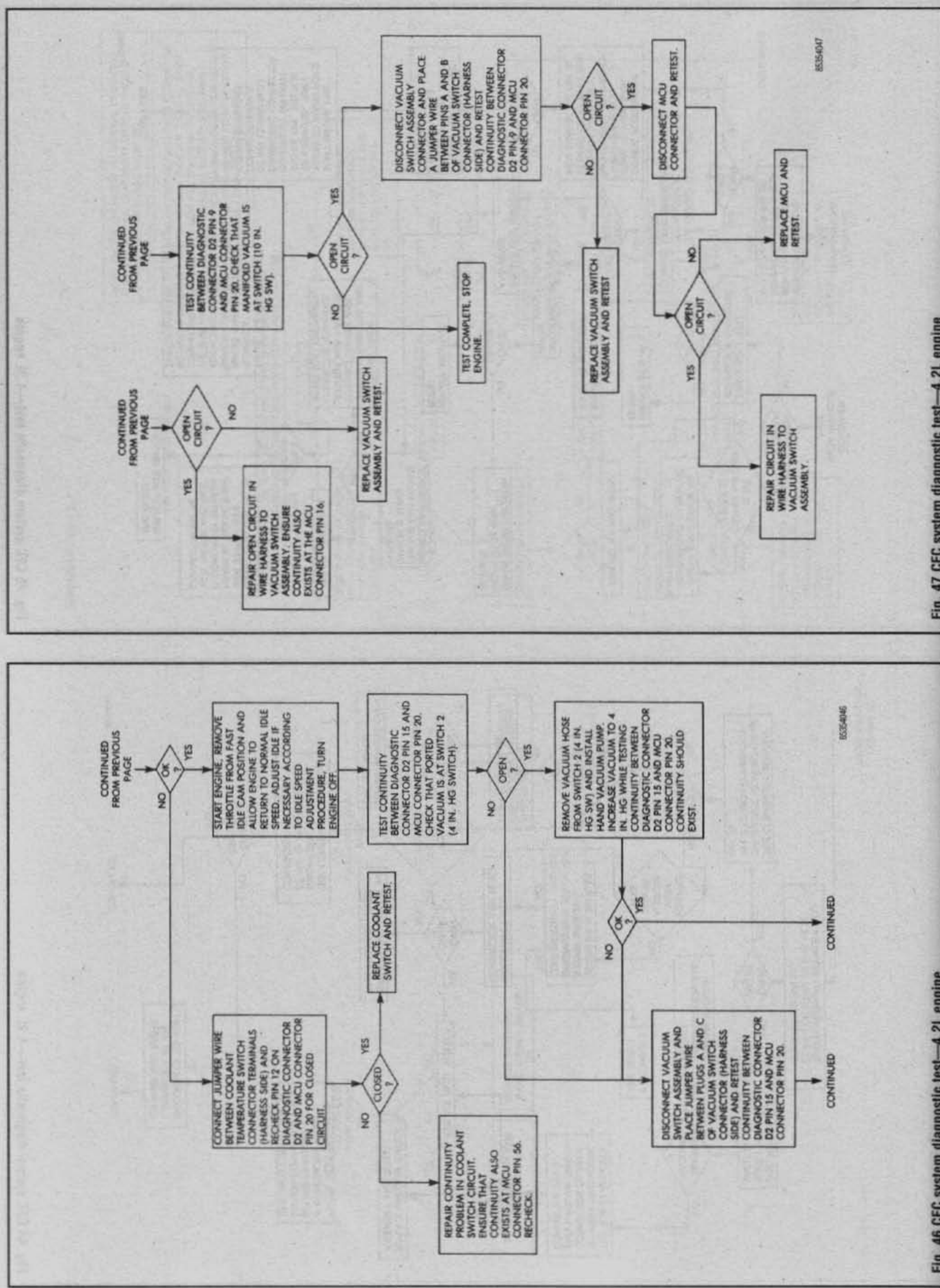

Fig. 47 CEC system diagnostic test—4.2L engine

Fig. 46 CEC system diagnostic test—4.2L engine

DIAGNOSTIC TEST 4

CLOSED LOOP OPERATIONAL TEST

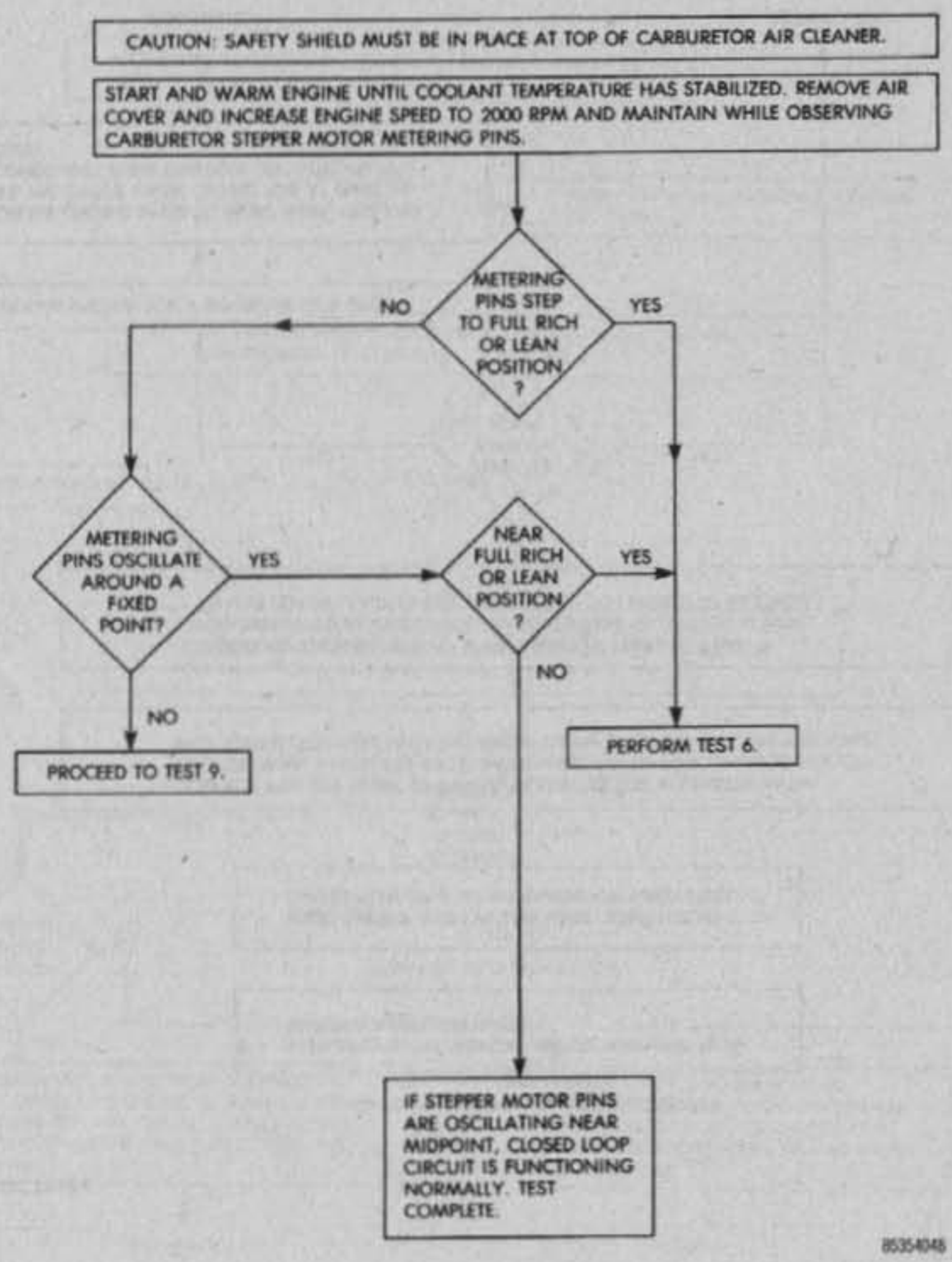

Fig. 48 CEC system diagnostic test—4.2L engine

DIAGNOSTIC TEST 5

ELECTRONIC IGNITION RETARD TEST

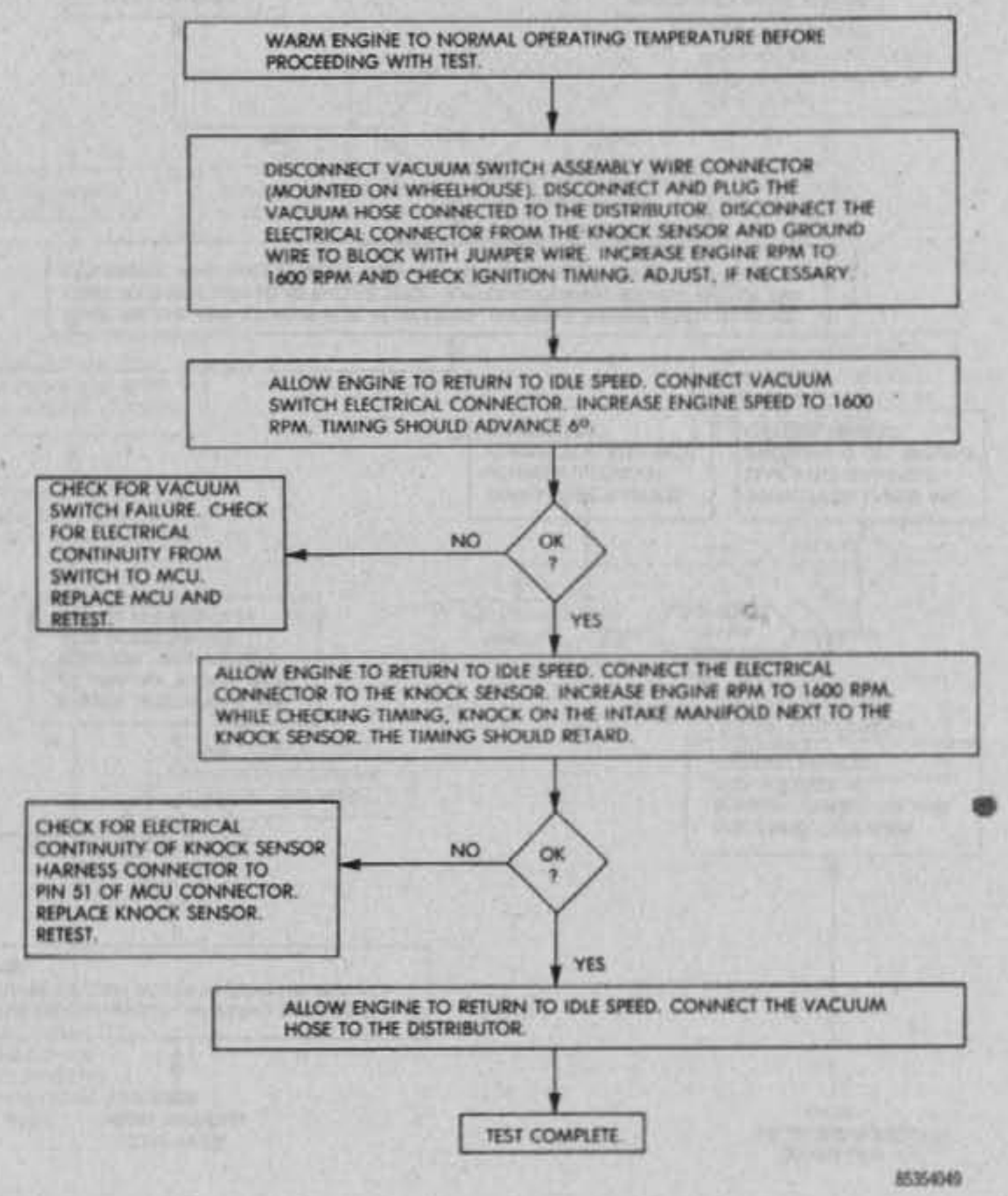

Fig. 49 CEC system diagnostic test—4.2L engine

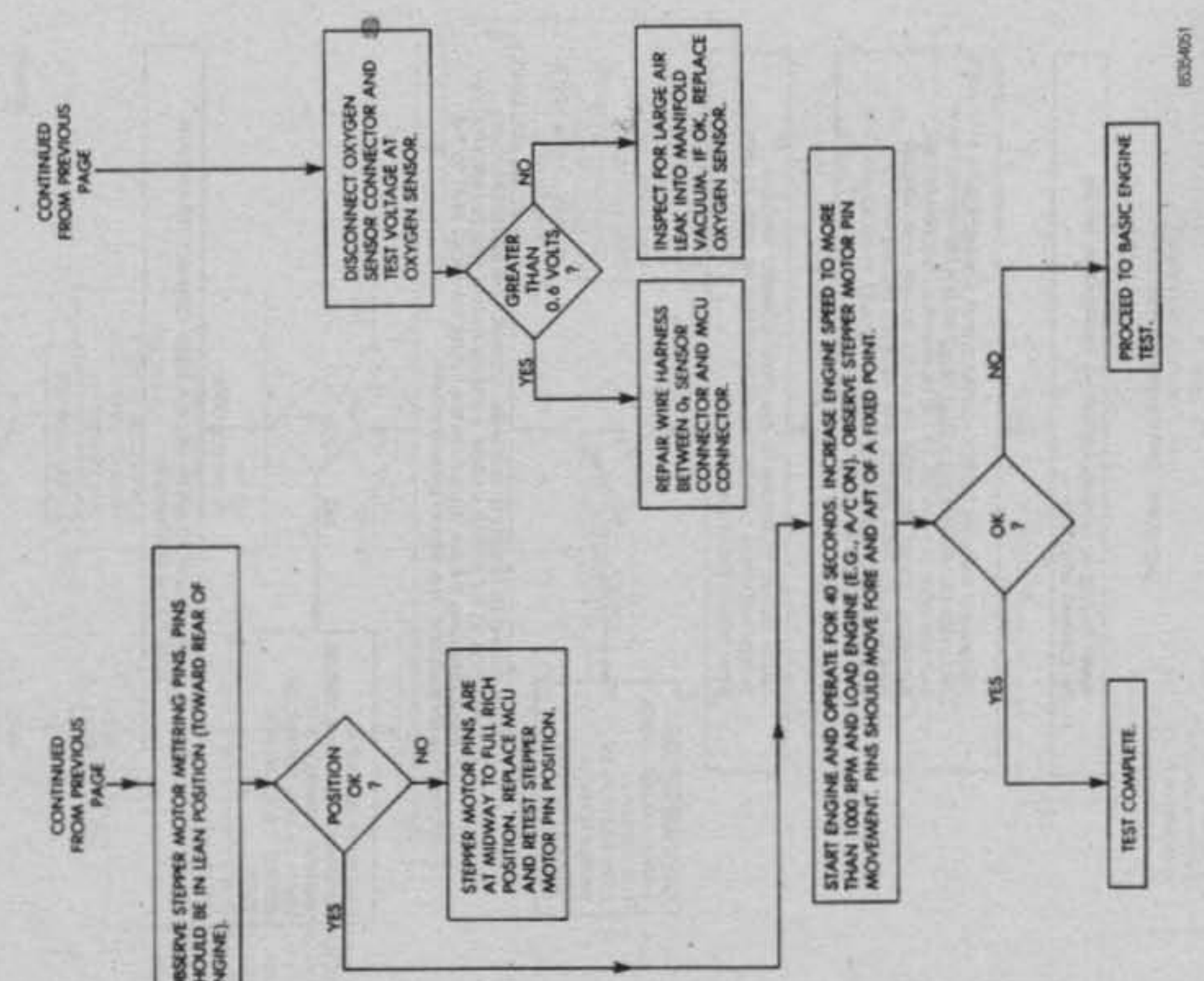

Fig. 51 CEC system diagnostic test—4.2L engine

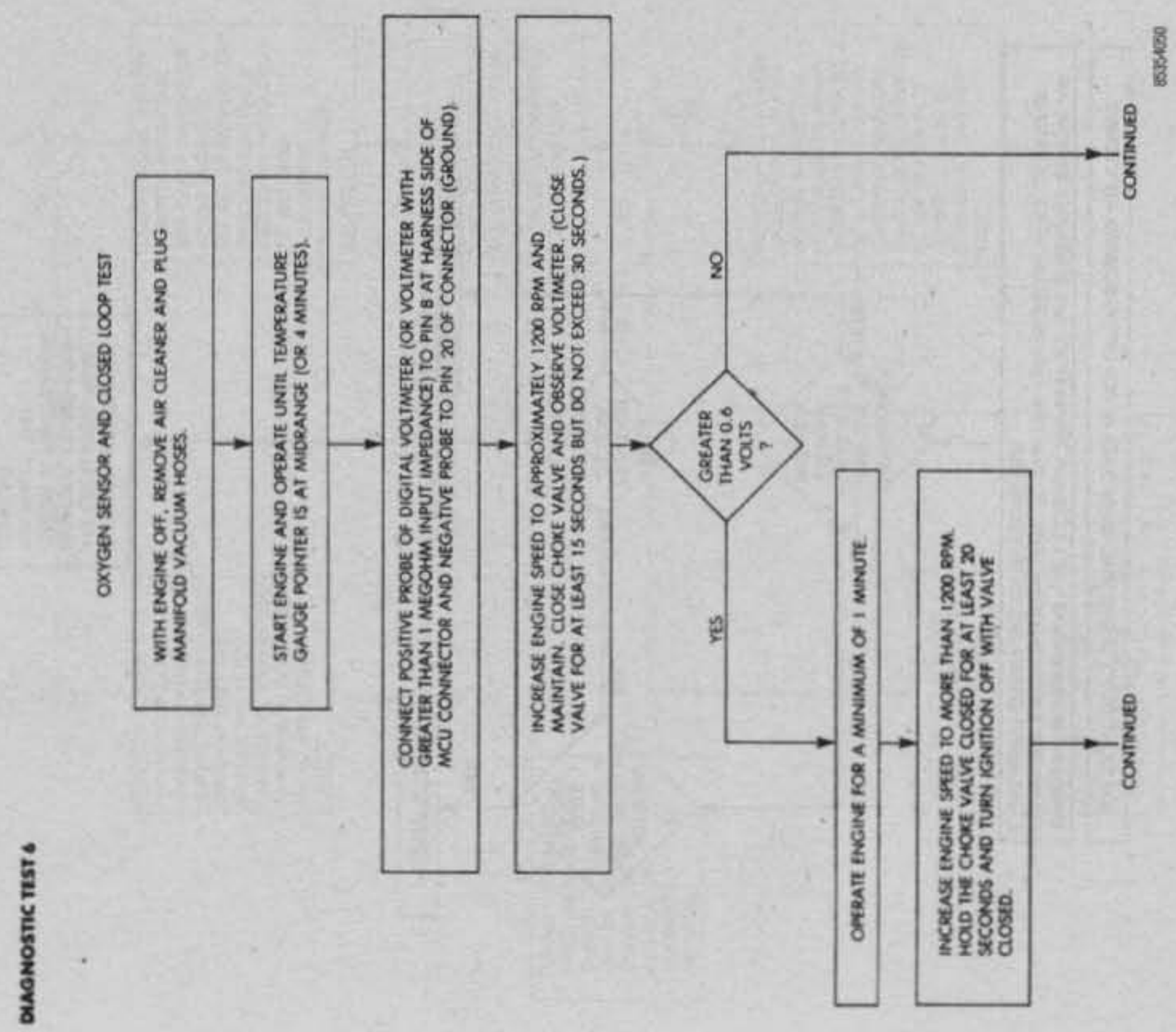

Fig. 50 CEC system diagnostic test—4.2L engine

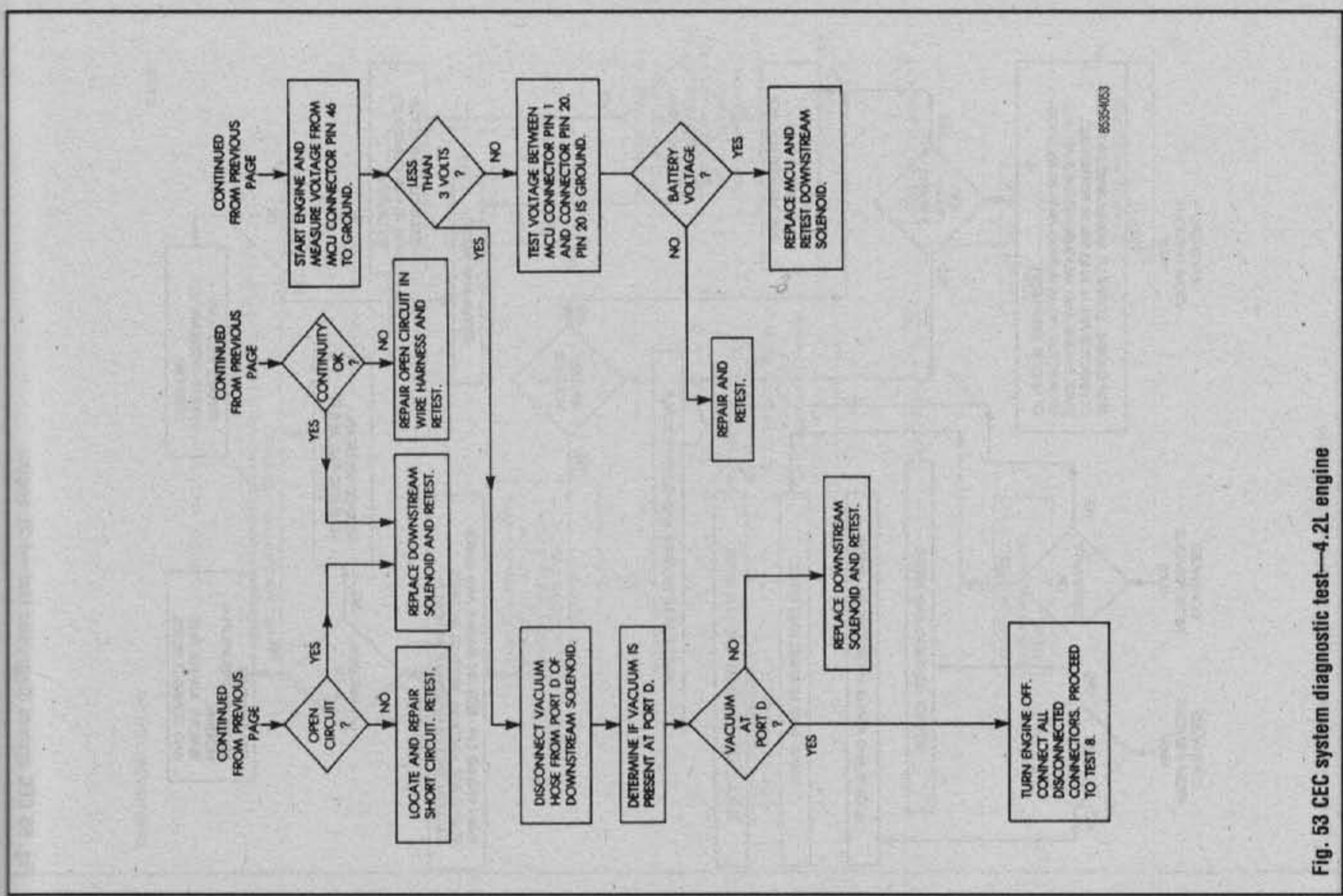

Fig. 53 CEC system diagnostic test—4.2L engine

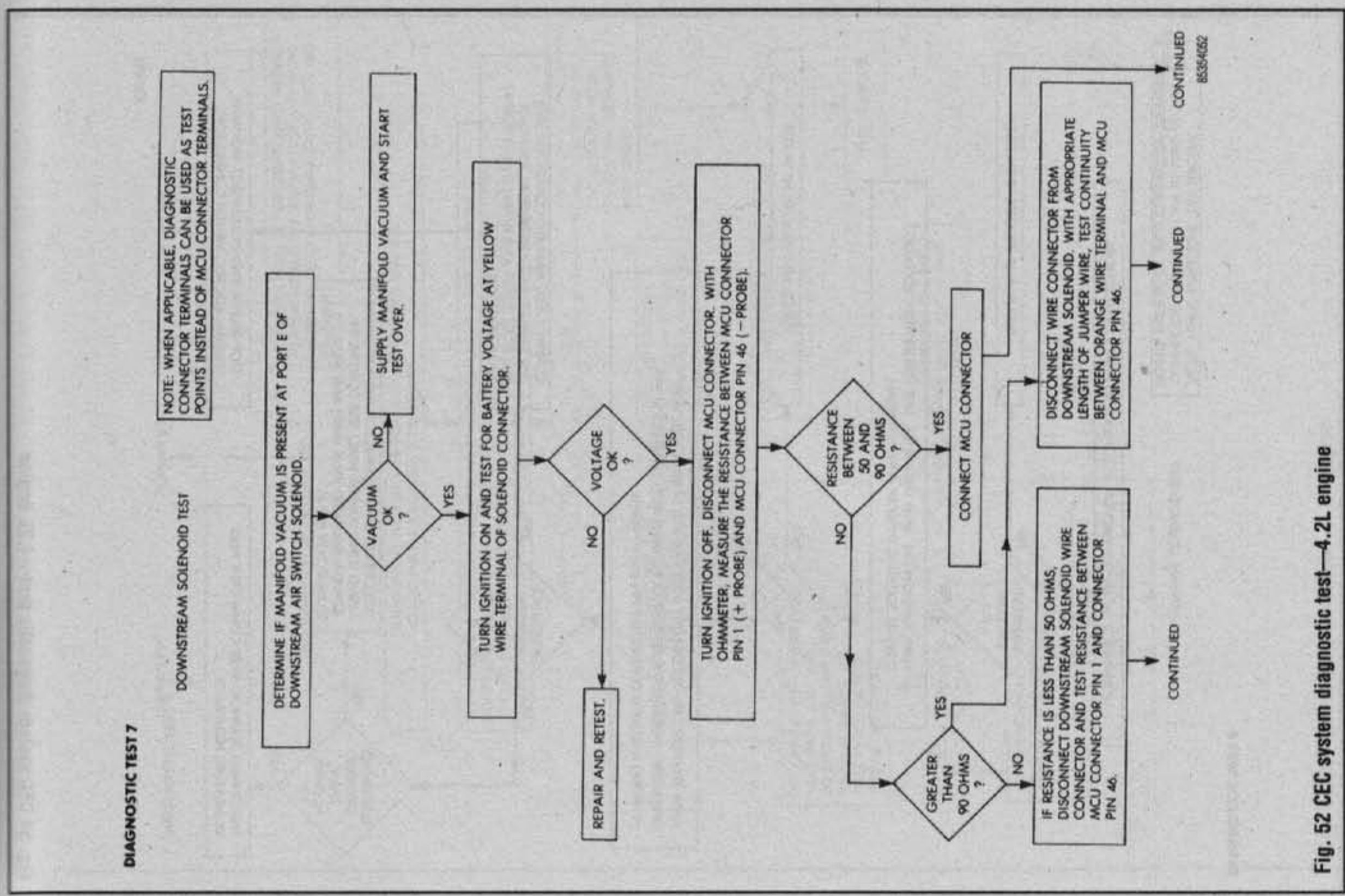

Fig. 52 CEC system diagnostic test—4.2L engine

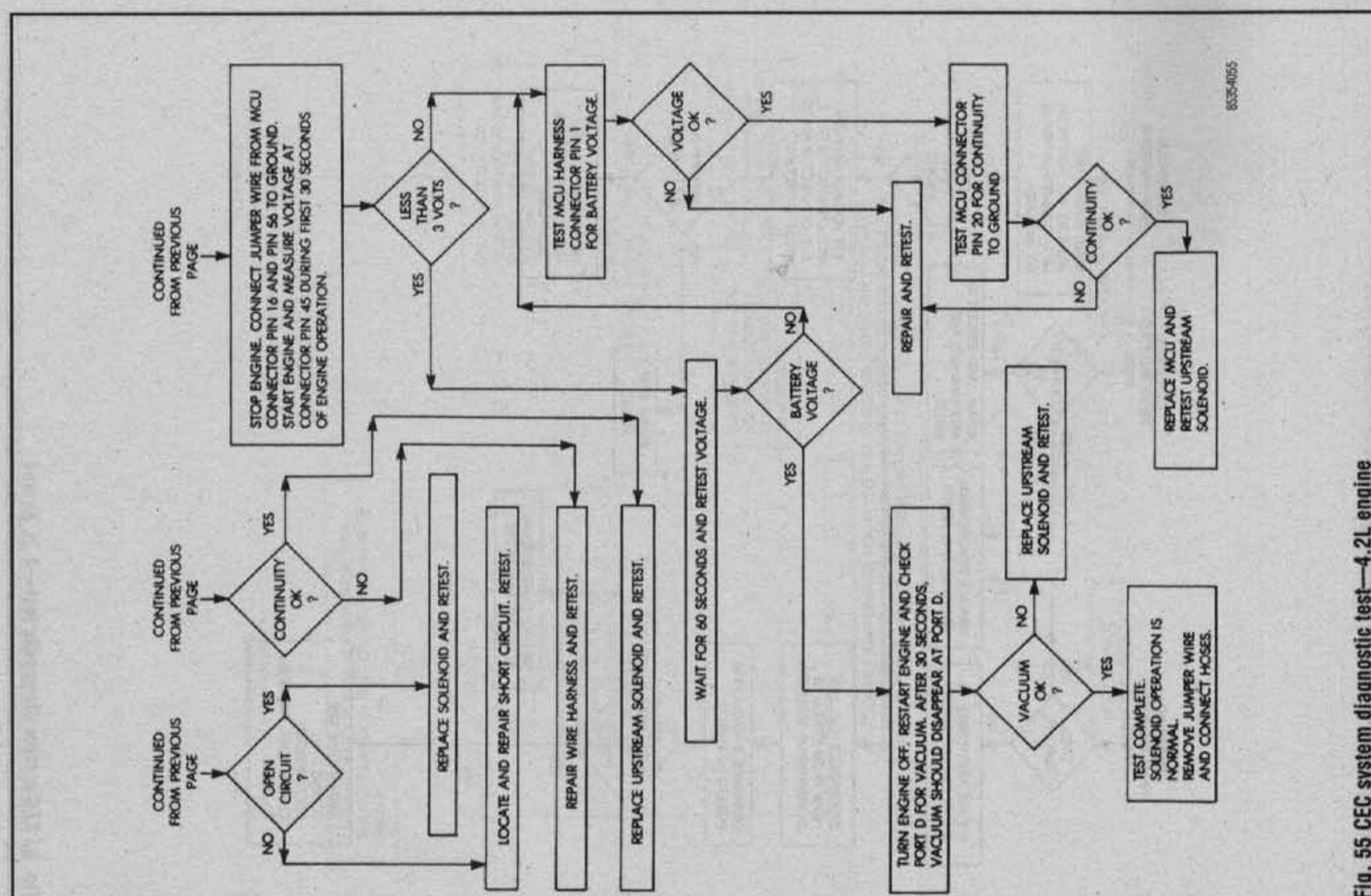

Fig. 55 CEC system diagnostic test—4.2L engine

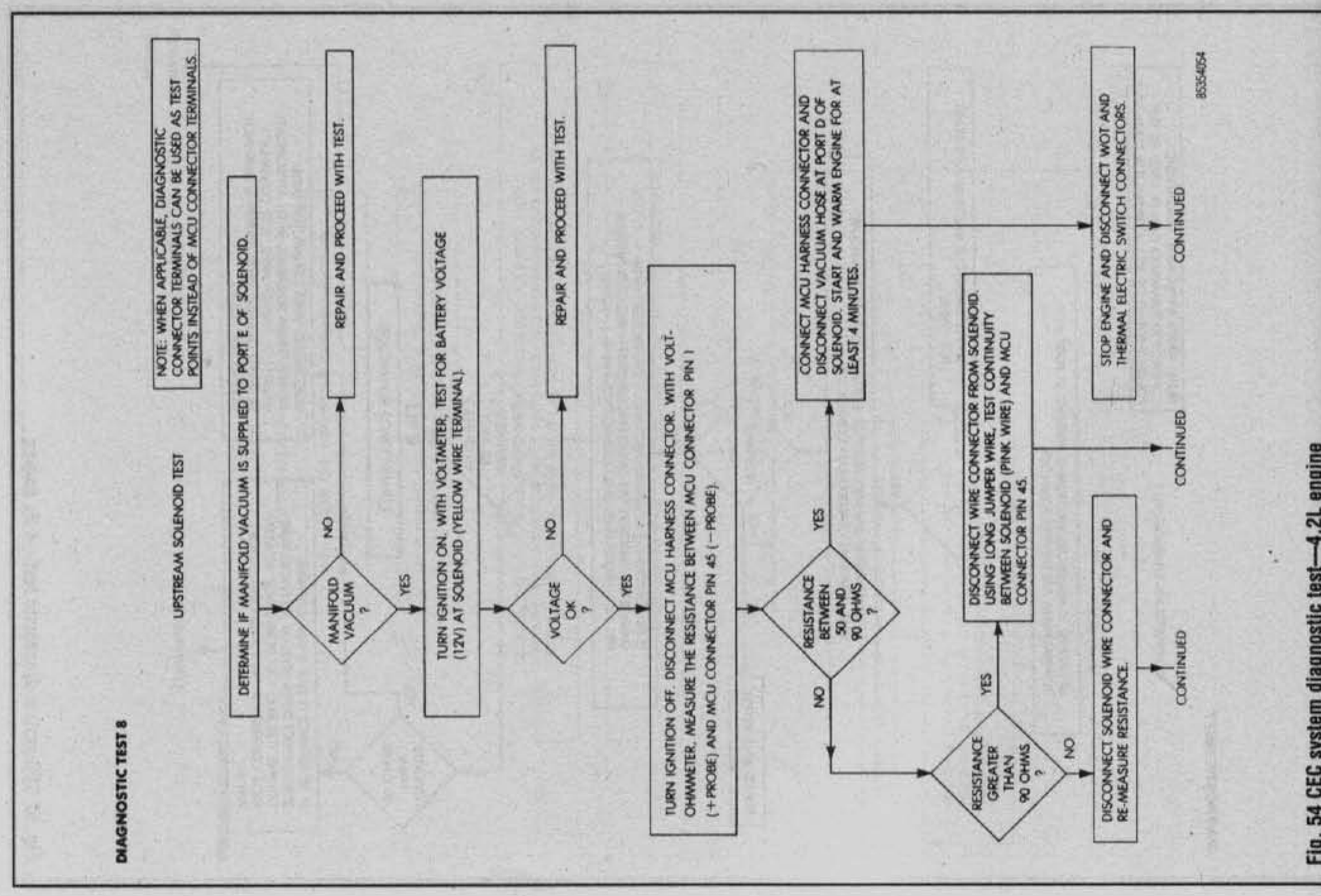

Fig. 54 CEC system diagnostic test—4.2L engine

DIAGNOSTIC TEST 9

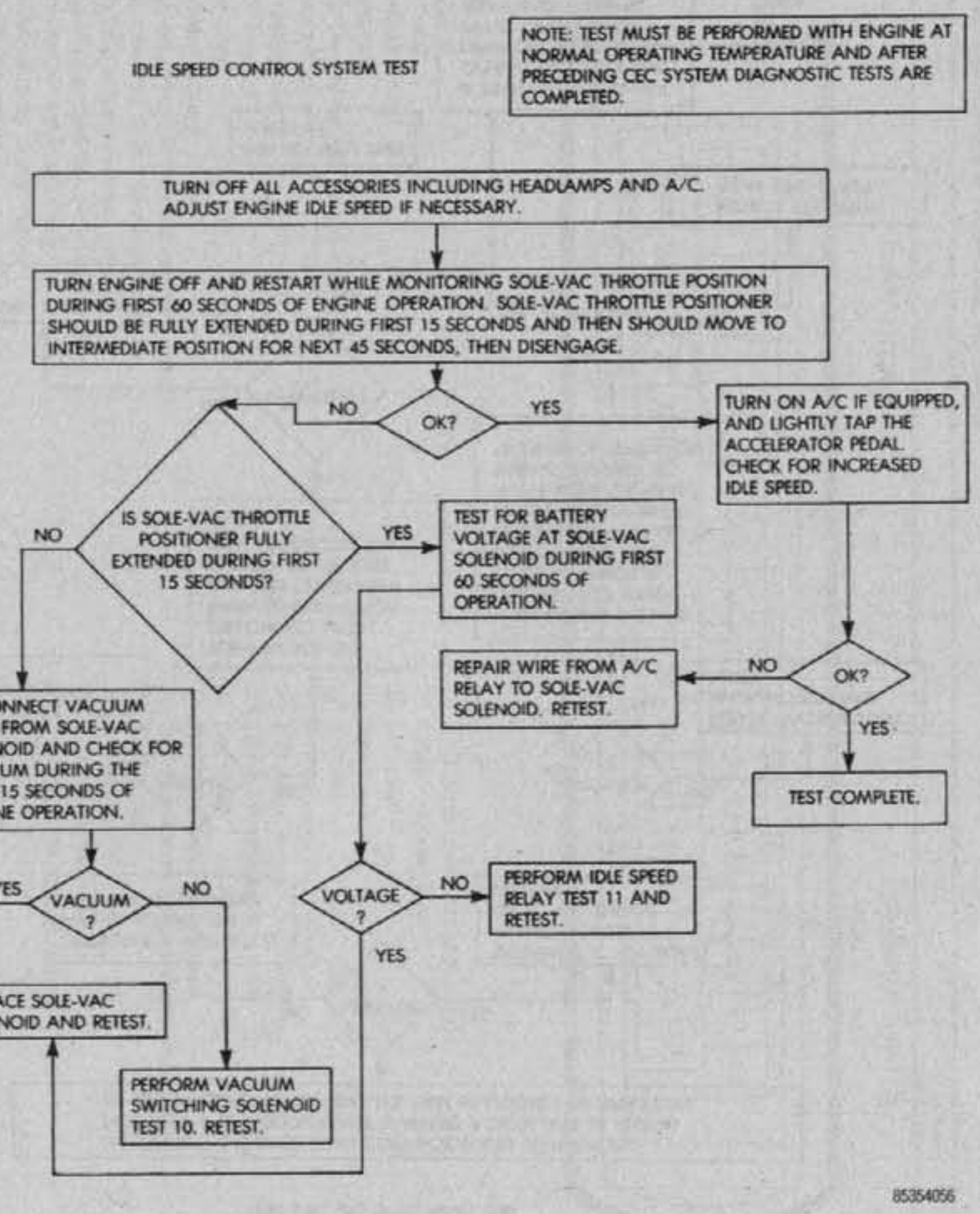

Fig. 56 CEC system diagnostic test—4.2L engine

DIAGNOSTIC TEST 10

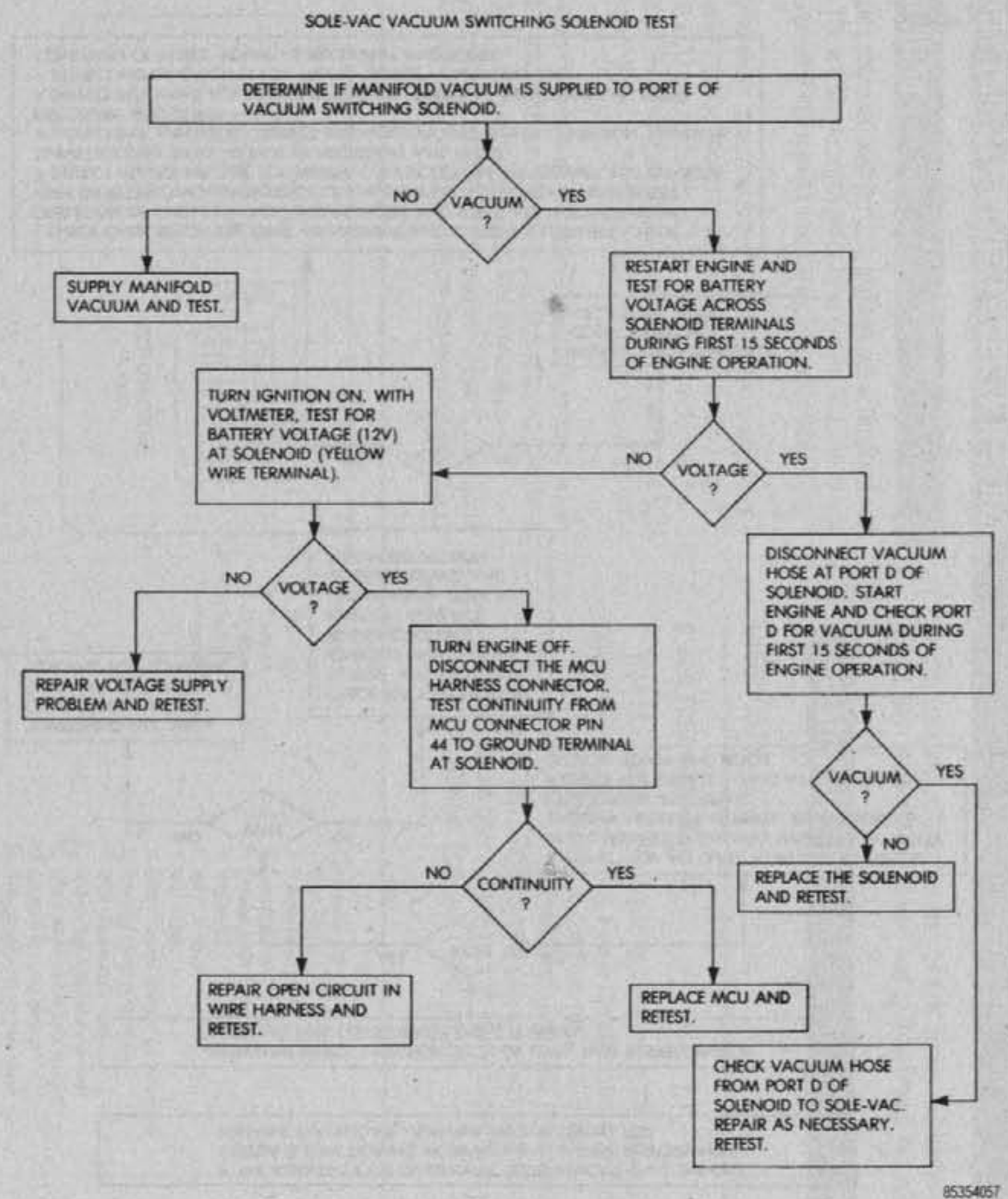

Fig. 57 CEC system diagnostic test—4.2L engine

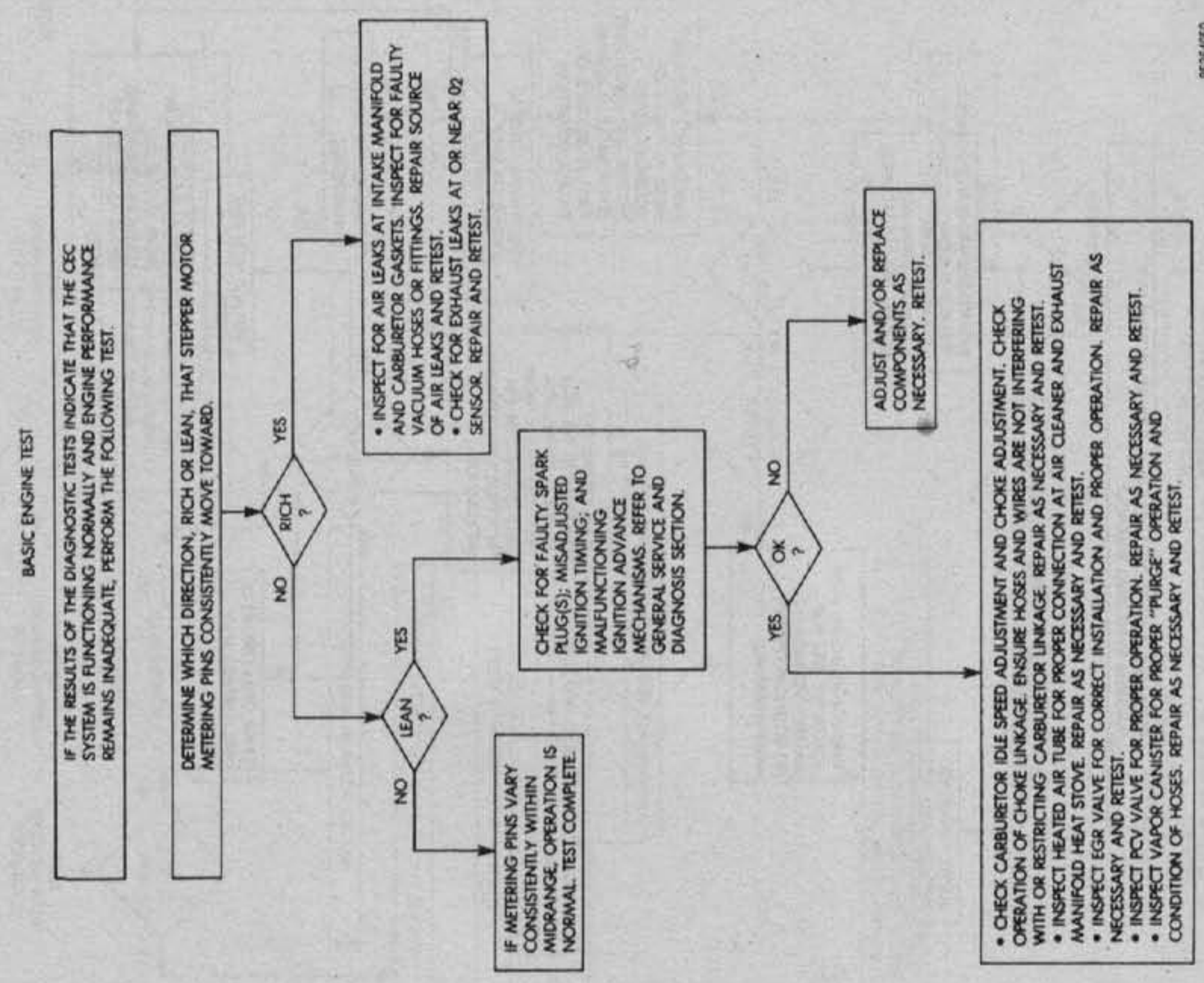

Fig. 59 CEC system diagnostic test—4.2L engine

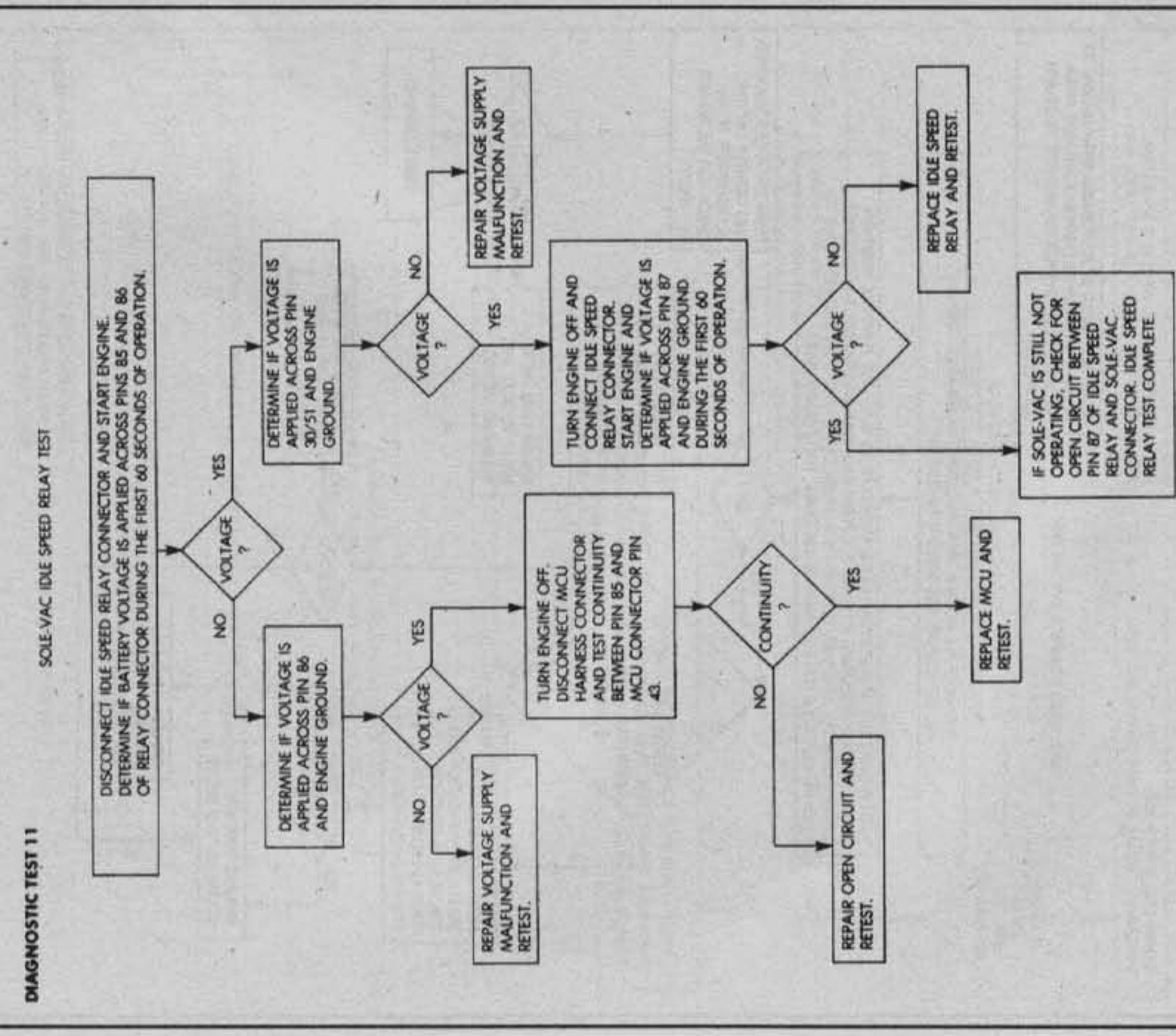

Fig. 58 CEC system diagnostic test—4.2L engine

THROTTLE BODY (SINGLE POINT) FUEL INJECTION

General Information

All 1987–90 Wranglers equipped with the 2.5L engines use a Throttle Body Injection (TBI) system. TBI is a single point, pulse time system that injects fuel through an electrically operated fuel injector into the throttle body (above the throttle plate).

The fuel injection pulse width (period of time that the injector is energized—causing fuel to be released into the throttle body) is controlled by the Engine Control Unit (ECU). The ECU accomplishes this by opening and closing the ground path to the injector. By controlling the fuel injector pulse width the ECU is able to meter the amount of fuel to the engine and constantly adjust the air fuel ratio.

The ECU receives inputs from sensors that react to exhaust gas oxygen content, coolant temperature, manifold absolute pressure, engine speed (crankshaft position), throttle position, battery voltage, and air fuel temperature.

Air-fuel mixture calibrations for various driving and atmospheric conditions are pre-programmed into the ECU. The ECU monitors and analyzes its various inputs, computes engine fuel and ignition timing requirements based on these inputs, then controls fuel delivery and ignition timing accordingly.

Troubleshooting

DIAGNOSTIC TESTS

See Figures 60 thru 87

If an M.S. 1700 or Diagnostic Readout Box (DRB) is used, the following test procedures are not applicable. Follow the directions included with the tester.

The following diagnostic procedures require a digital volt-ohmmeter (minimum 1 ohm;), a twelve point test lamp (type 1892 or equivalent), an assortment of jumper wires and probes, a hand vacuum gauge, and a timing light. For additional tests, please refer to the American Motors Solid State (Renix) Ignition System information in Section 2 of this manual.

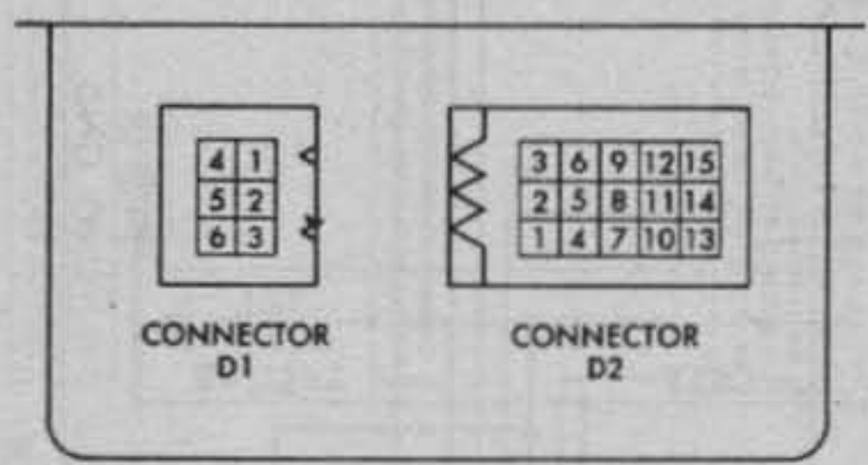

Connector D1
1 Tach input
2 Ignition
3 Ground
4 Start solenoid
5 Battery
6 Fuel pump relay

Connector D2
1 Shift lamp
2 Power latch relay
3 Park/neutral
4 Power latch relay (B+)
5 Not used
6 WOT switch
7 Not used
8 Manifold air temperature sensor
9 Ignition control module
10 EGR valve solenoid
11 ISA motor extend (forward)
12 Coolant temperature sensor
13 Closed throttle switch
14 ISA motor retract (reverse)
15 Not used

85354061

Fig. 60 TBI system diagnostic connectors—1987–90 2.5L engine

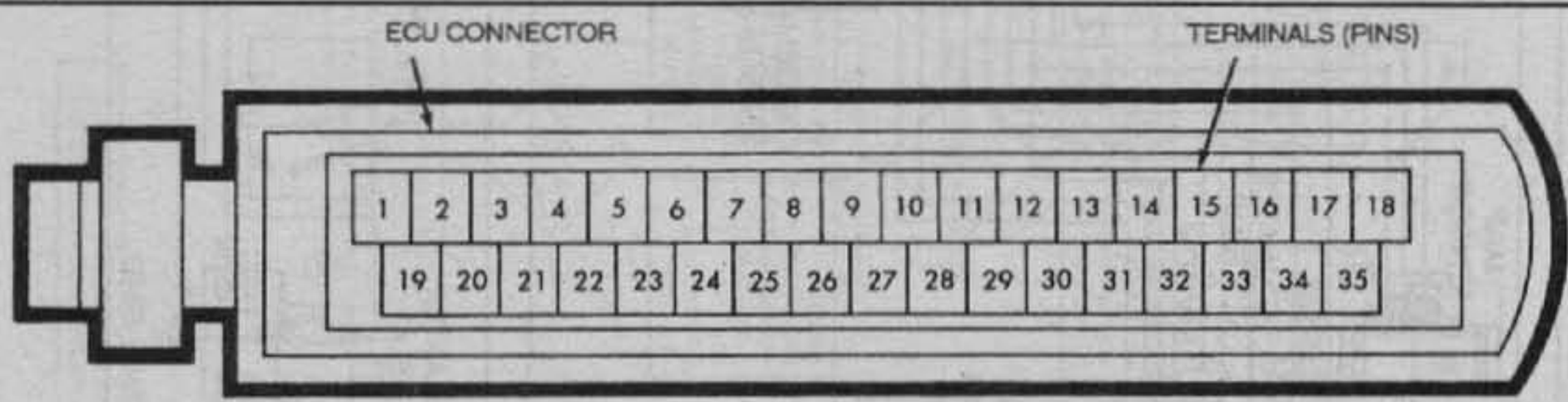

1 Ground
2 Ground
3 Ignition switch
4 Battery
5 EGR valve/canister purge solenoid
6 Fuel pump relay
7 B+ latch relay
8 WOT switch
9 Not used
10 System ground
11 Speed sensor (crankshaft position sensor)
12 Park/neutral switch (auto. trans. only)
13 Throttle position sensor ground
14 Manifold air/fuel temperature sensor
15 Coolant temperature sensor
16 5.0 volt supply to map sensor and TPS sensor
17 Manifold absolute pressure - ground
18 Shift lamp (manual trans. only)
19 System power (B+)
20 Not used
21 Injector
22 Not used
23 ISA motor retract (reverse)
24 ISA motor extend (forward)
25 Closed throttle (idle) switch
26 Not used
27 Ignition control module
28 Speed sensor (crankshaft position sensor)
29 Start signal
30 A/C request
31 Throttle position sensor
32 Temperature sensor ground
33 MAP sensor output
34 A/C select
35 O_2 sensor input

85354062

Fig. 61 TBI ECU connector—1987–90 2.5L engine

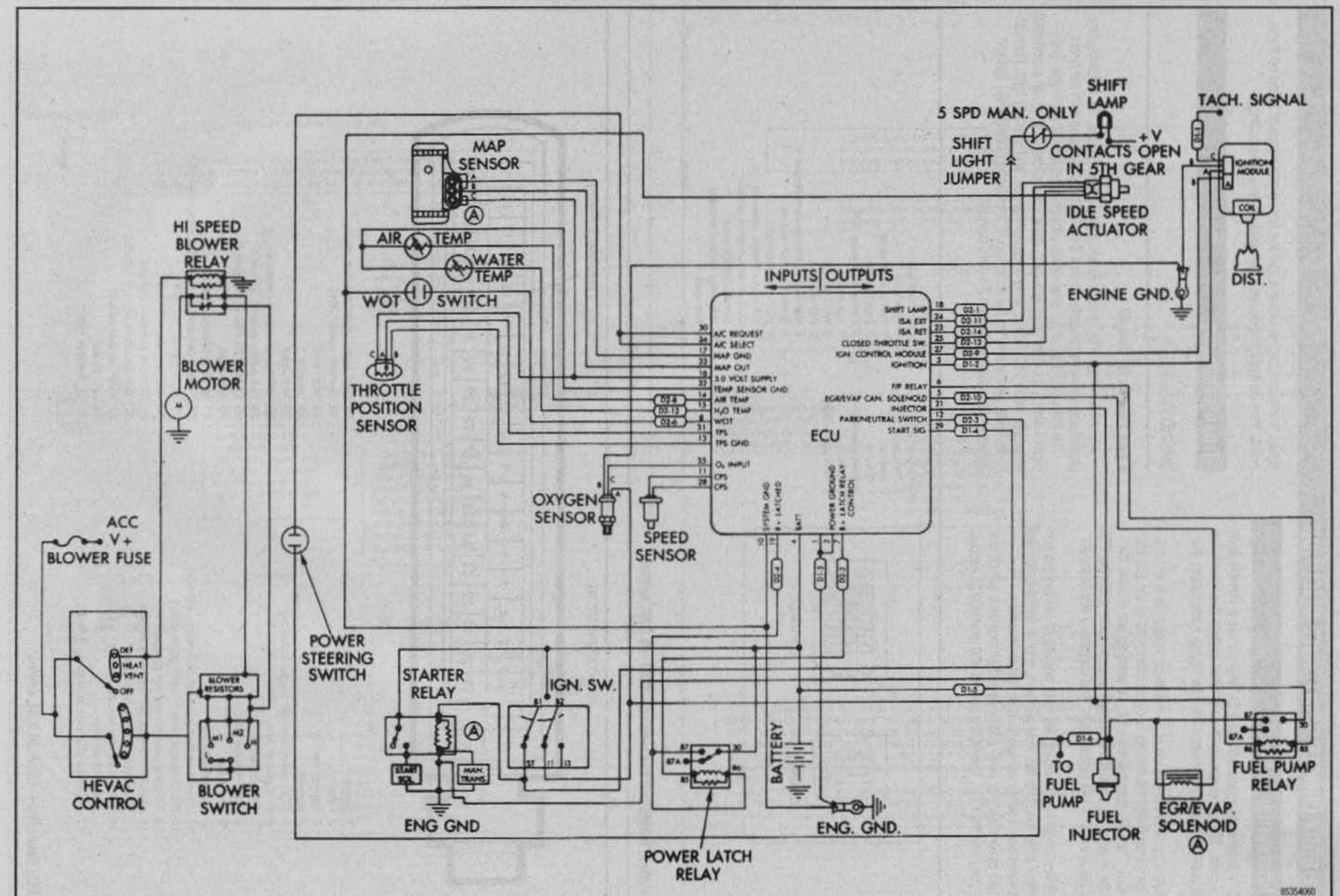

Fig. 62 TBI engine control system wiring schematic—1987–90 2.5L engine

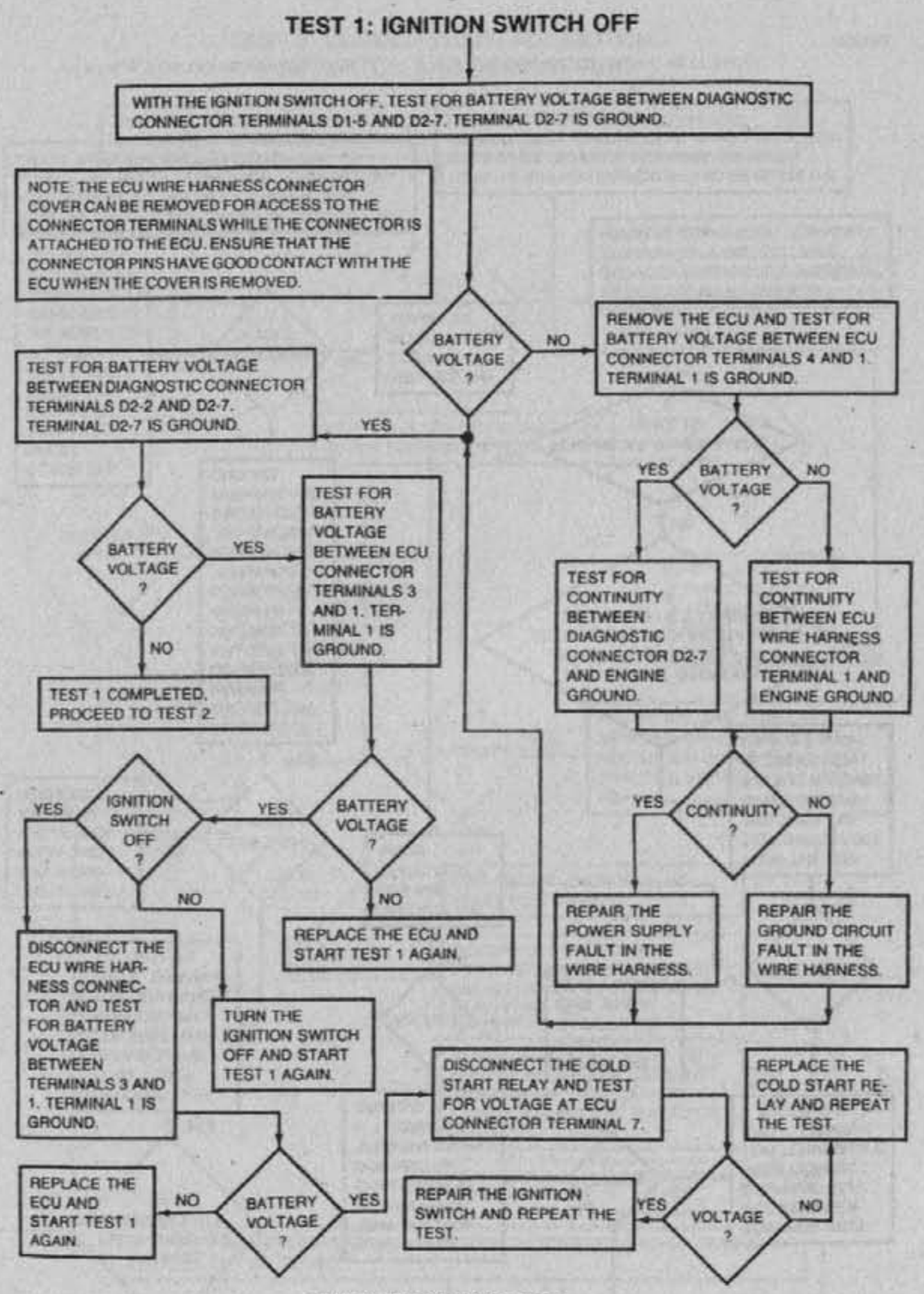

Fig. 63 TBI system diagnostic test—1987–90 2.5L engine

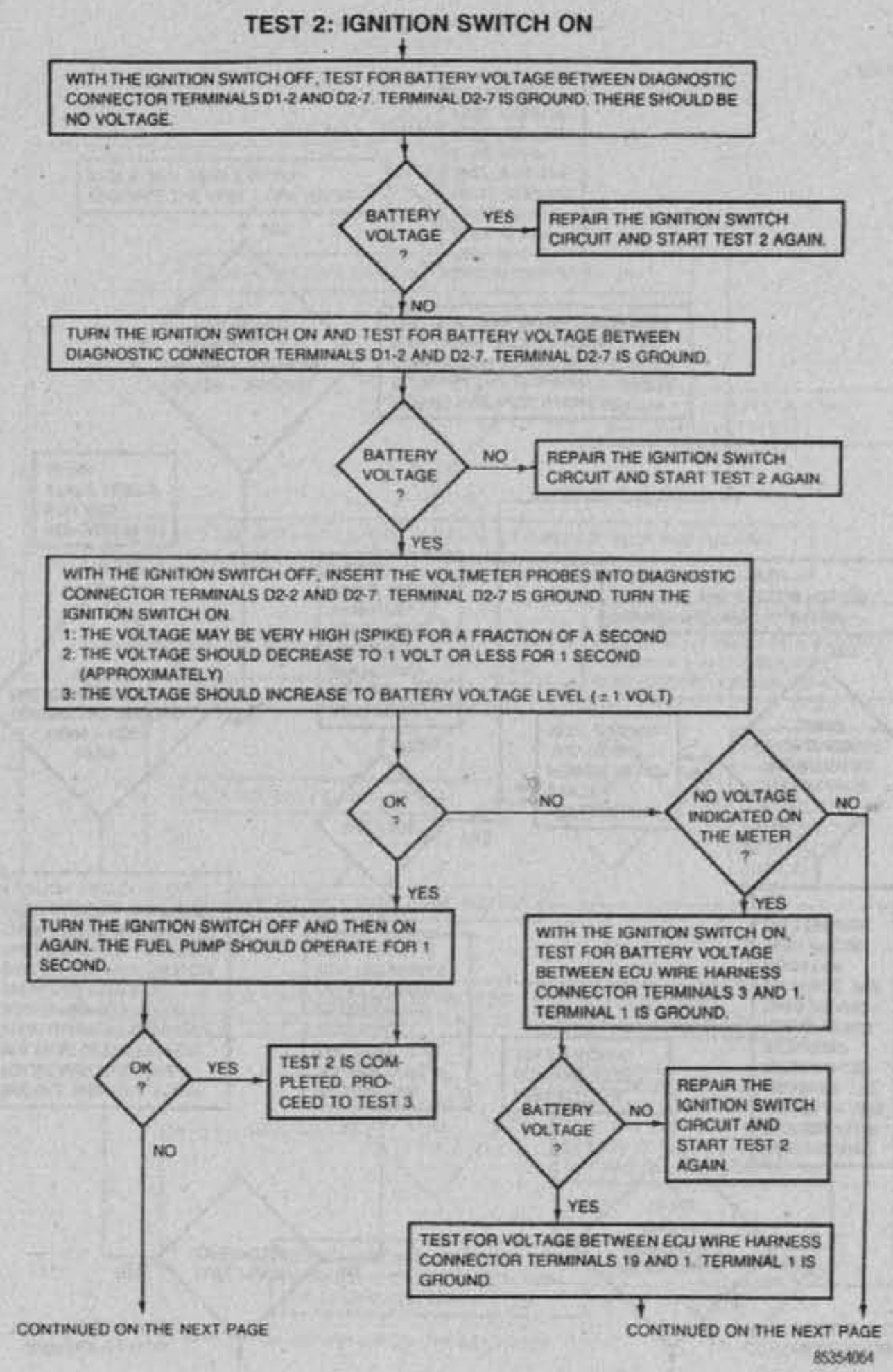

Fig. 64 TBI system diagnostic test—1987–90 2.5L engine

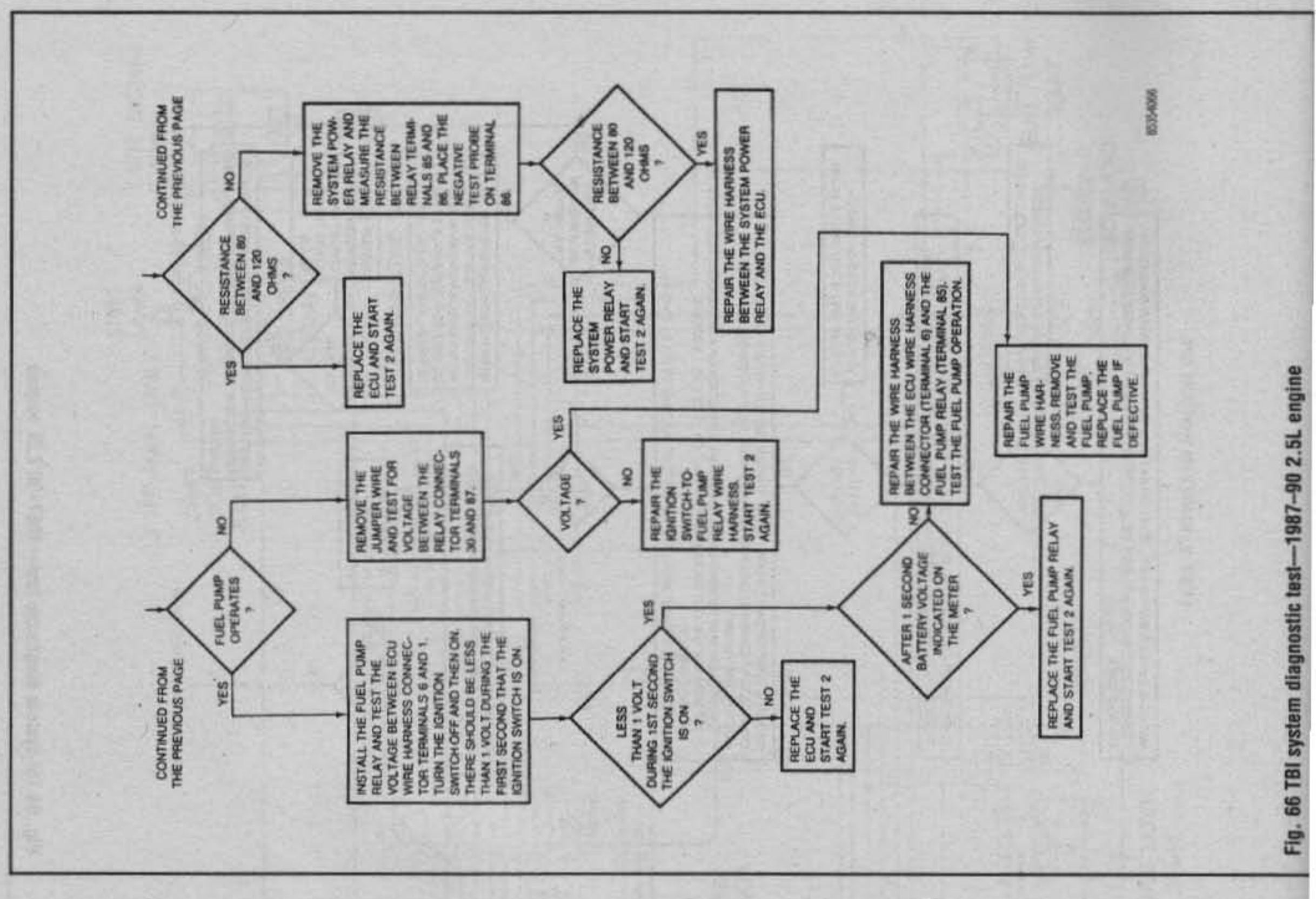

Fig. 66 TBI system diagnostic test—1987–90 2.5L engine

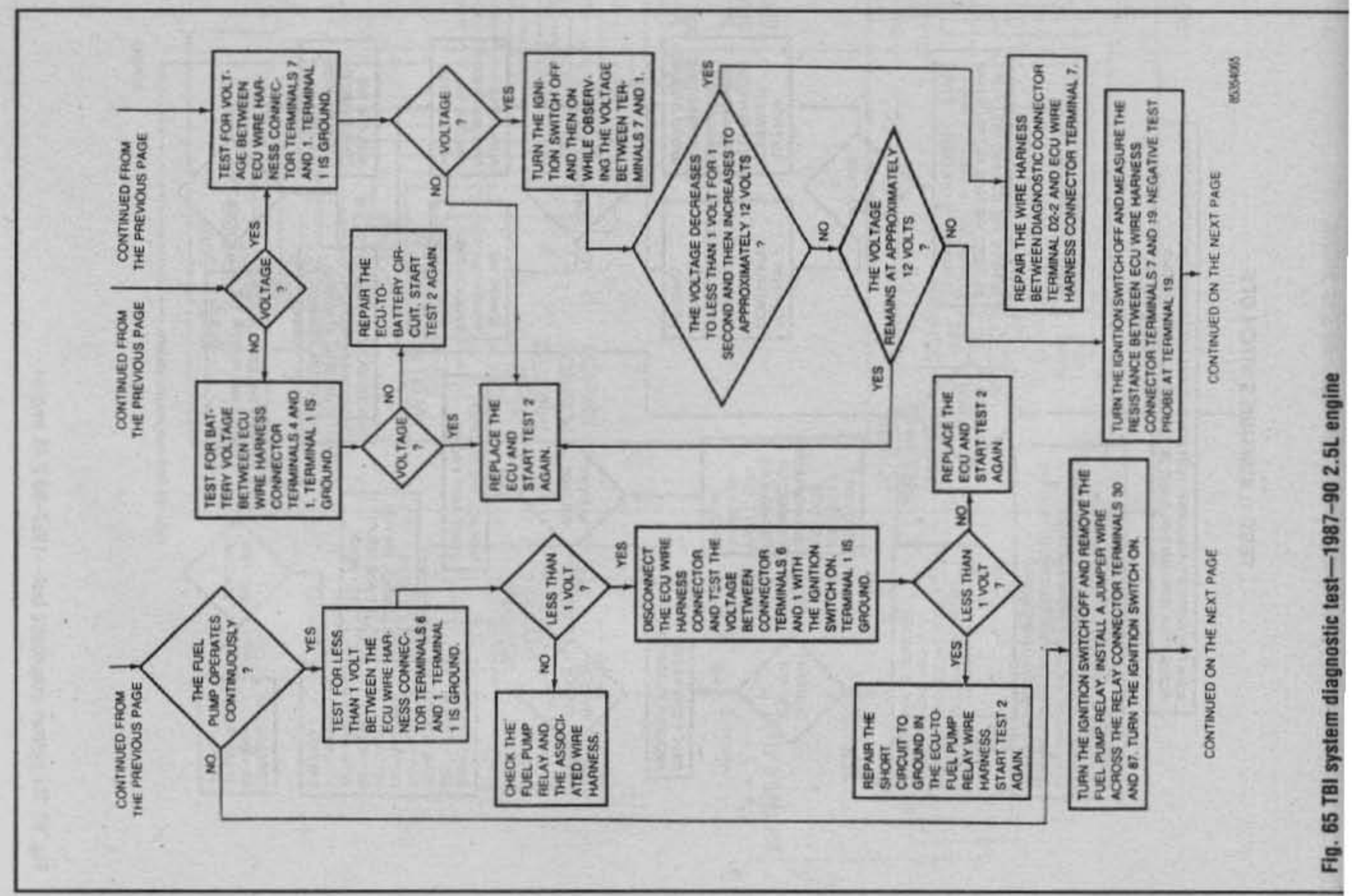

Fig. 65 TBI system diagnostic test—1987–90 2.5L engine

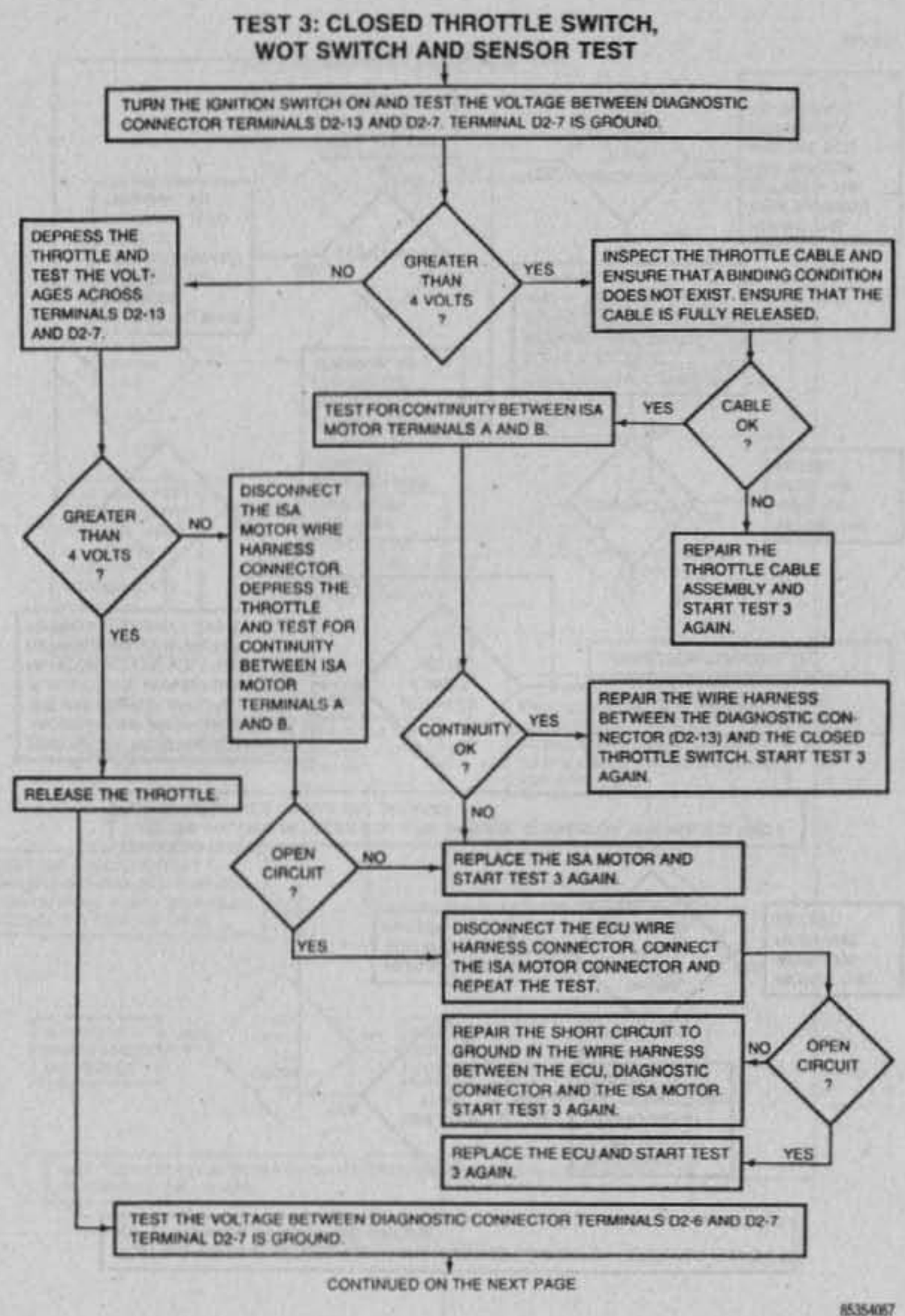

Fig. 67 TBI system diagnostic test—1987–90 2.5L engine

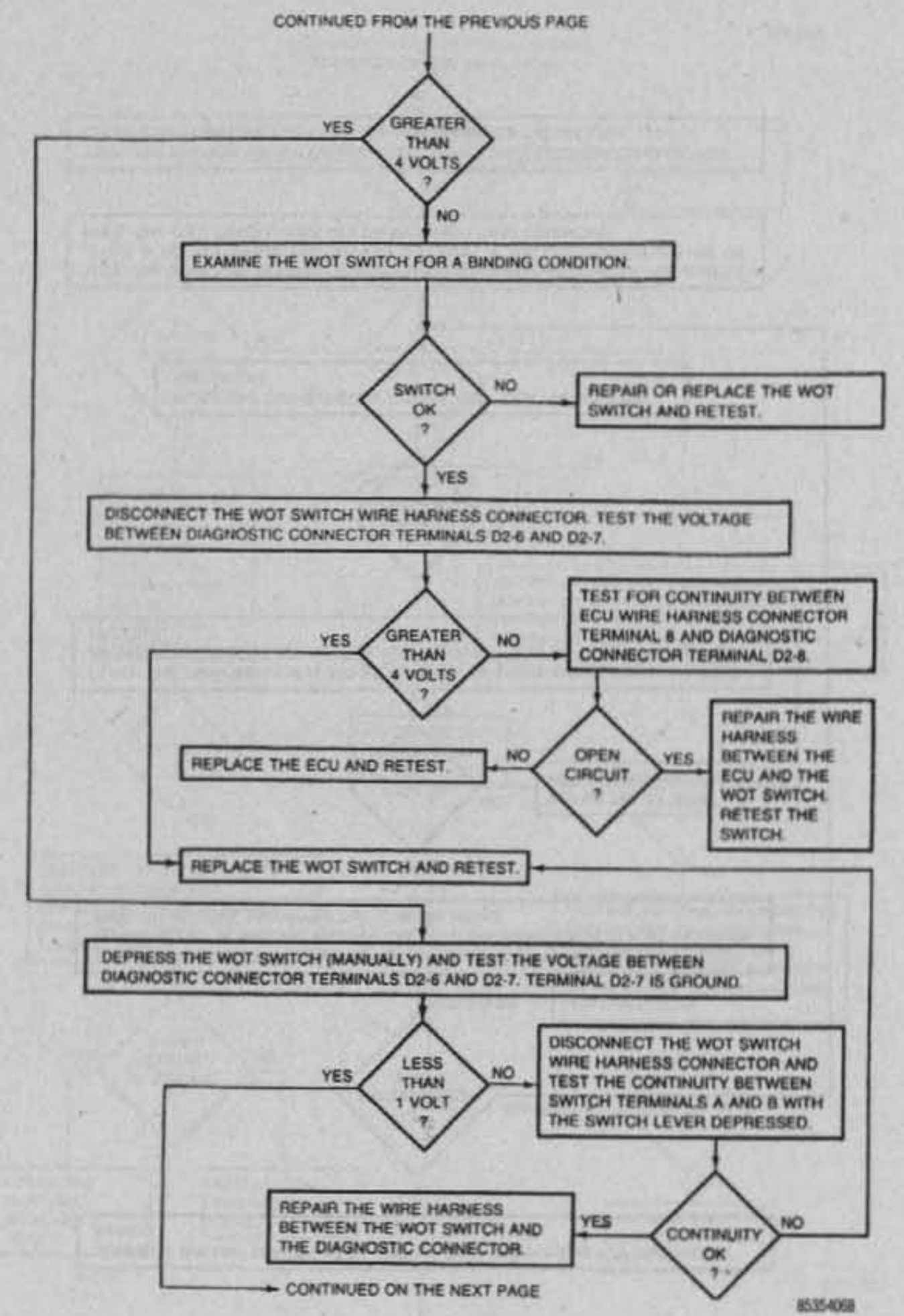

Fig. 68 TBI system diagnostic test—1987–90 2.5L engine

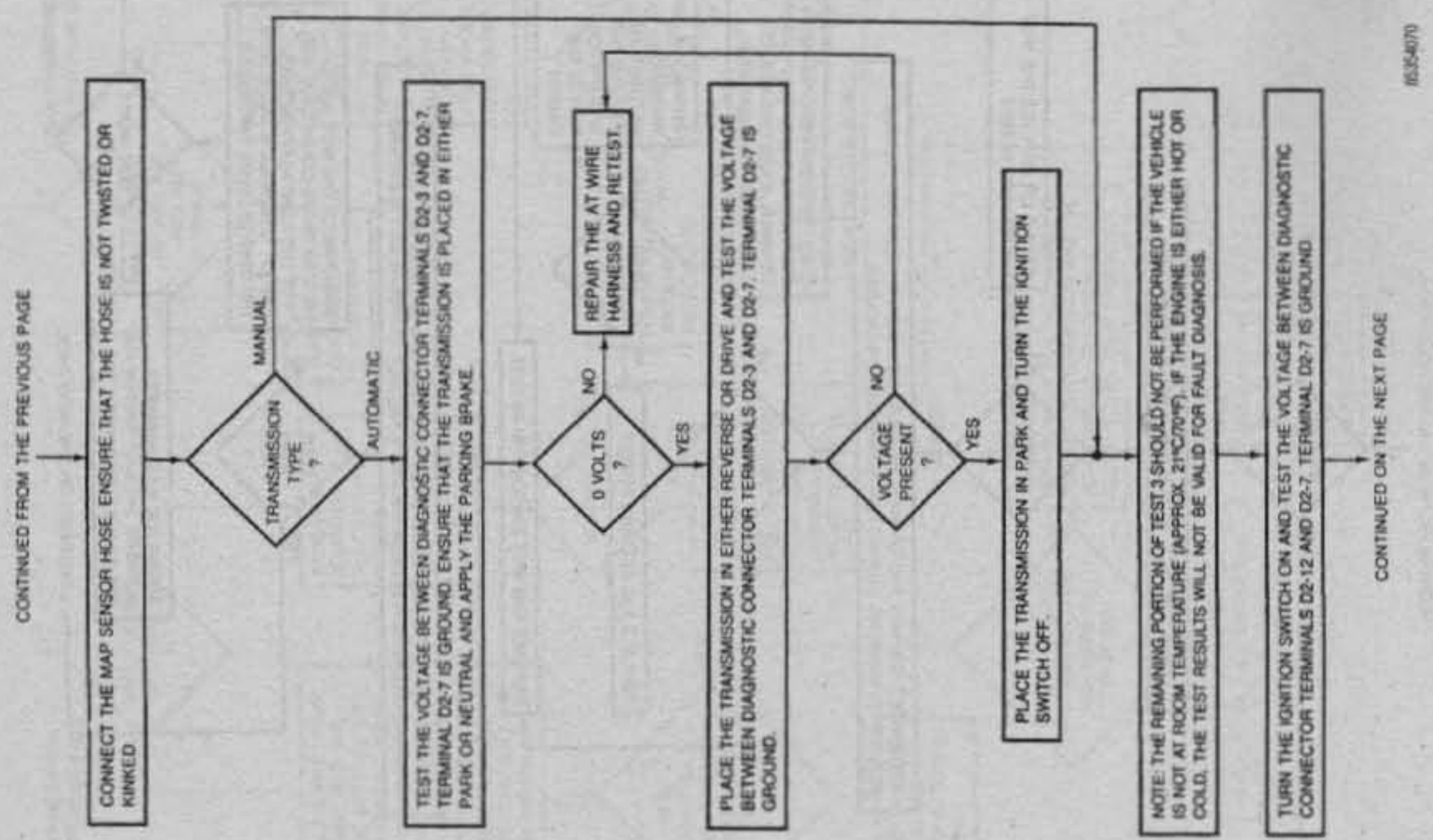

Fig. 70 TBI system diagnostic test—1987–90 2.5L engine

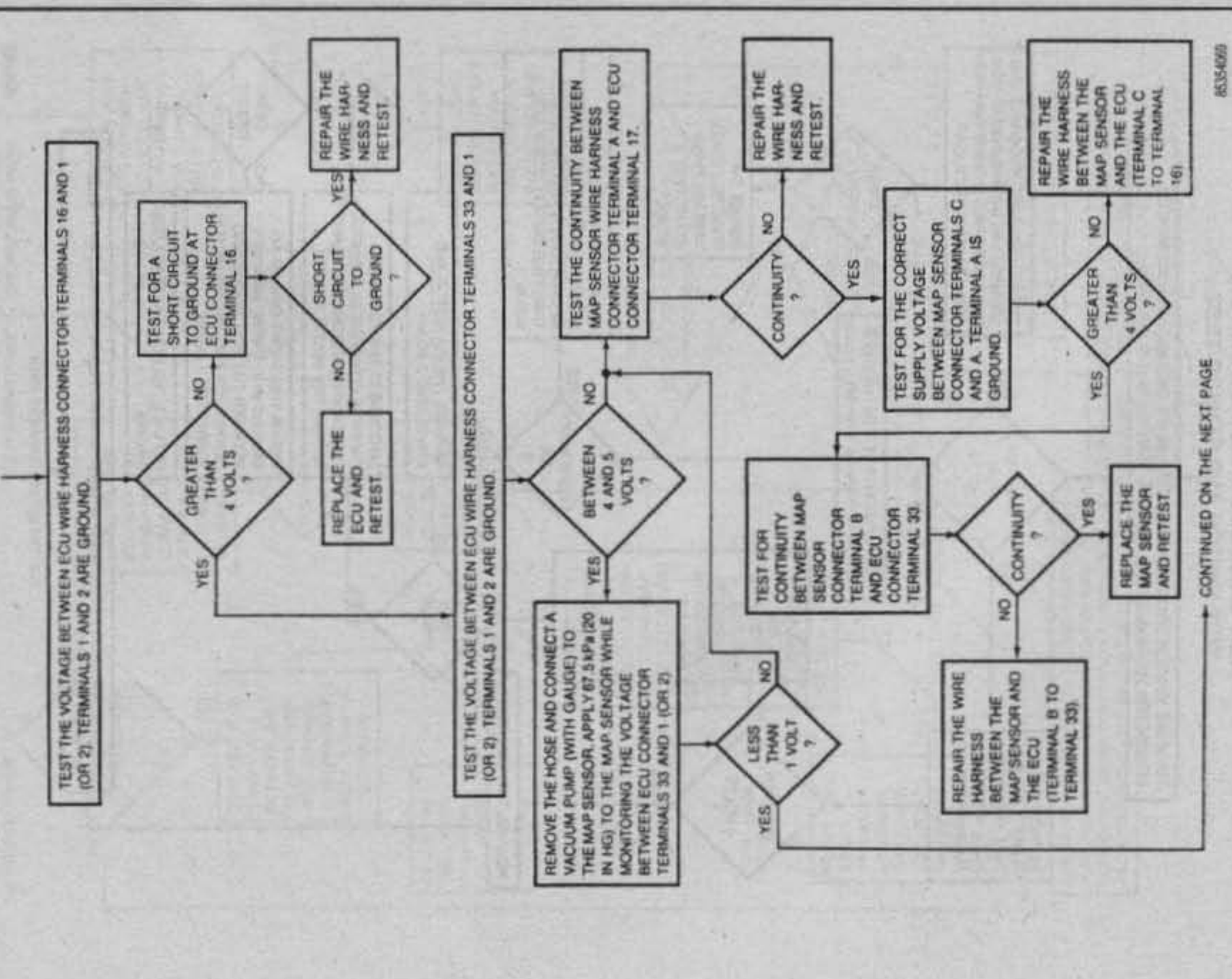

Fig. 69 TBI system diagnostic test—1987–90 2.5L engine

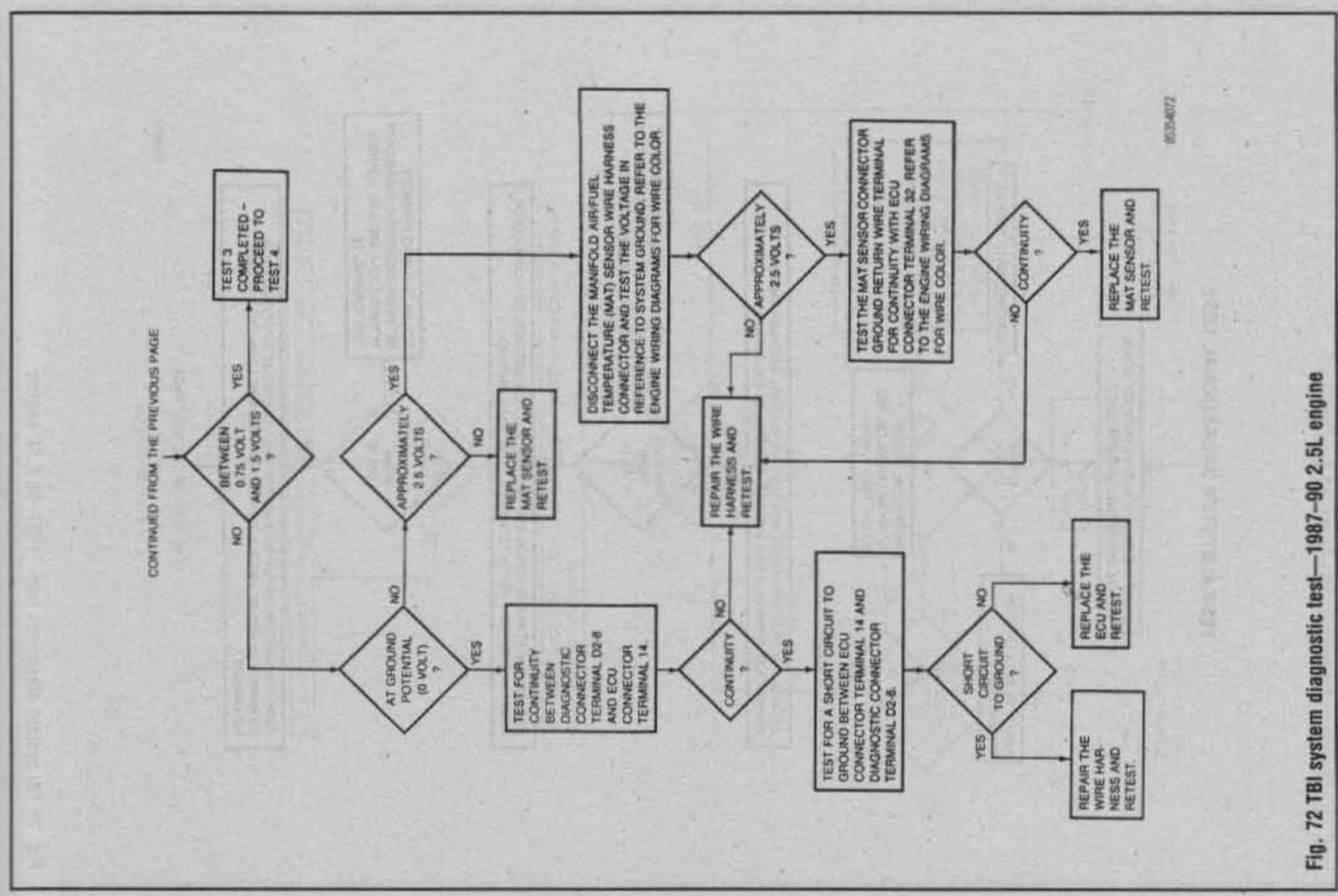

Fig. 72 TBI system diagnostic test—1987–90 2.5L engine

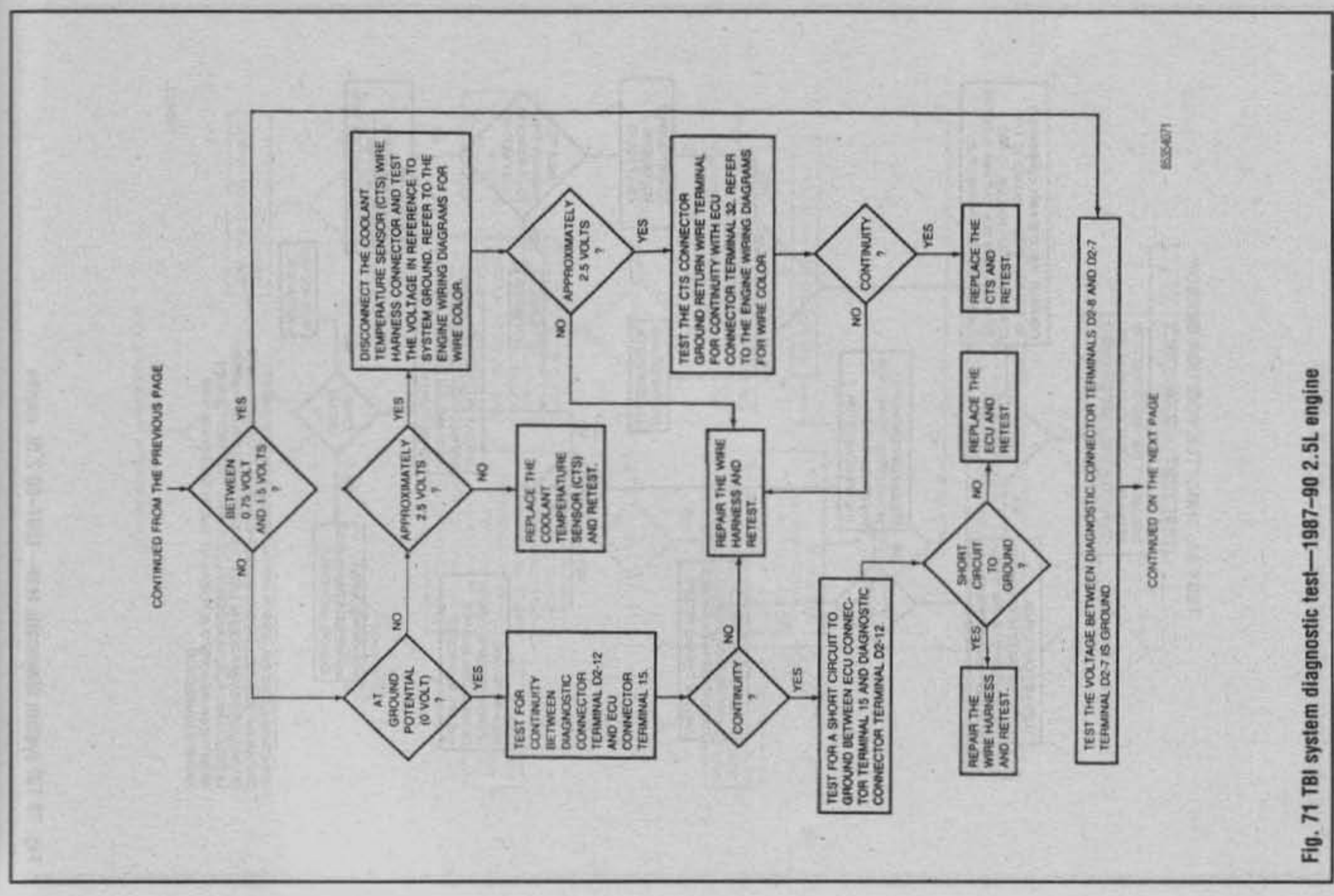

Fig. 71 TBI system diagnostic test—1987–90 2.5L engine

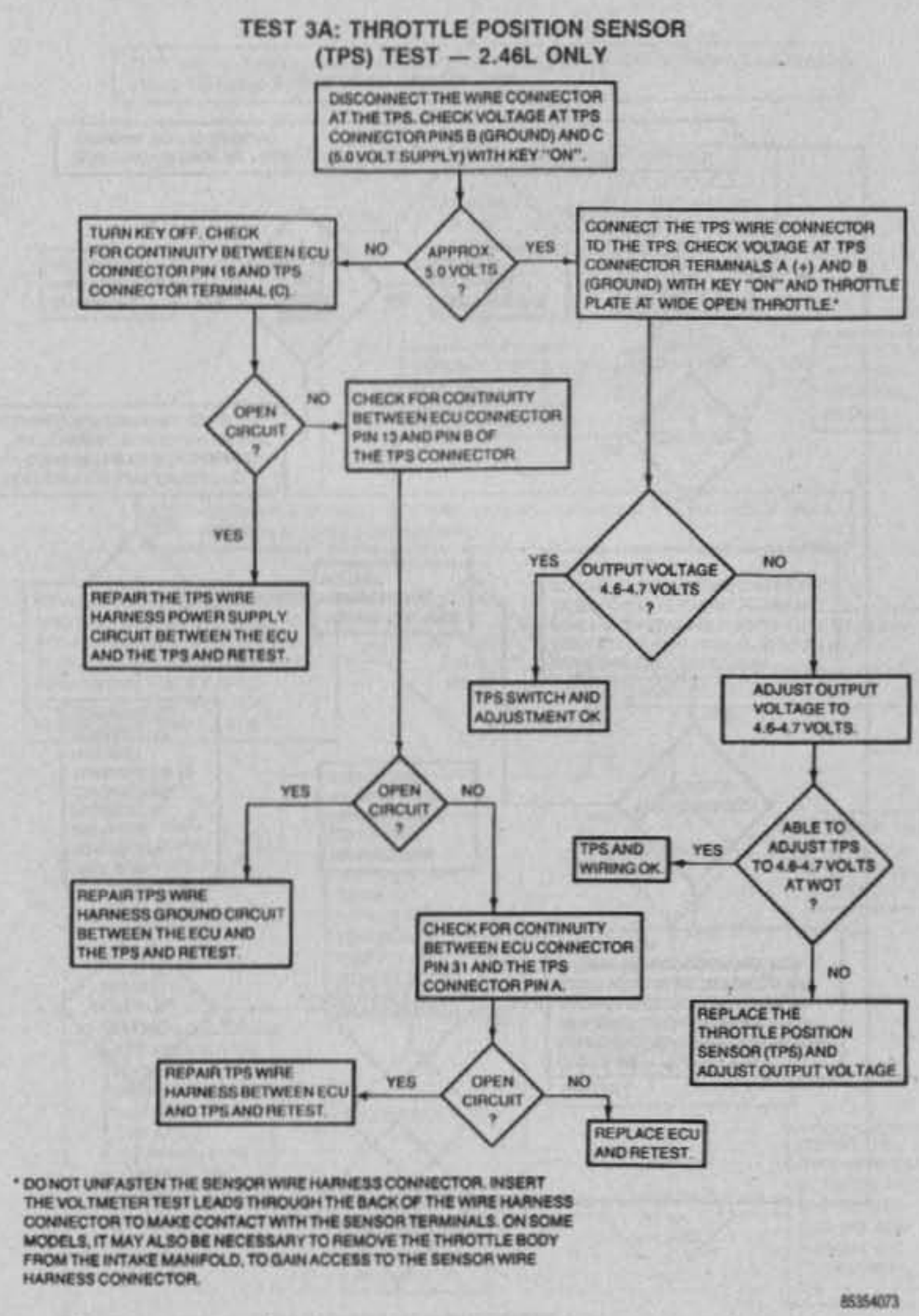

Fig. 73 TBI system diagnostic test—1987–90 2.5L engine

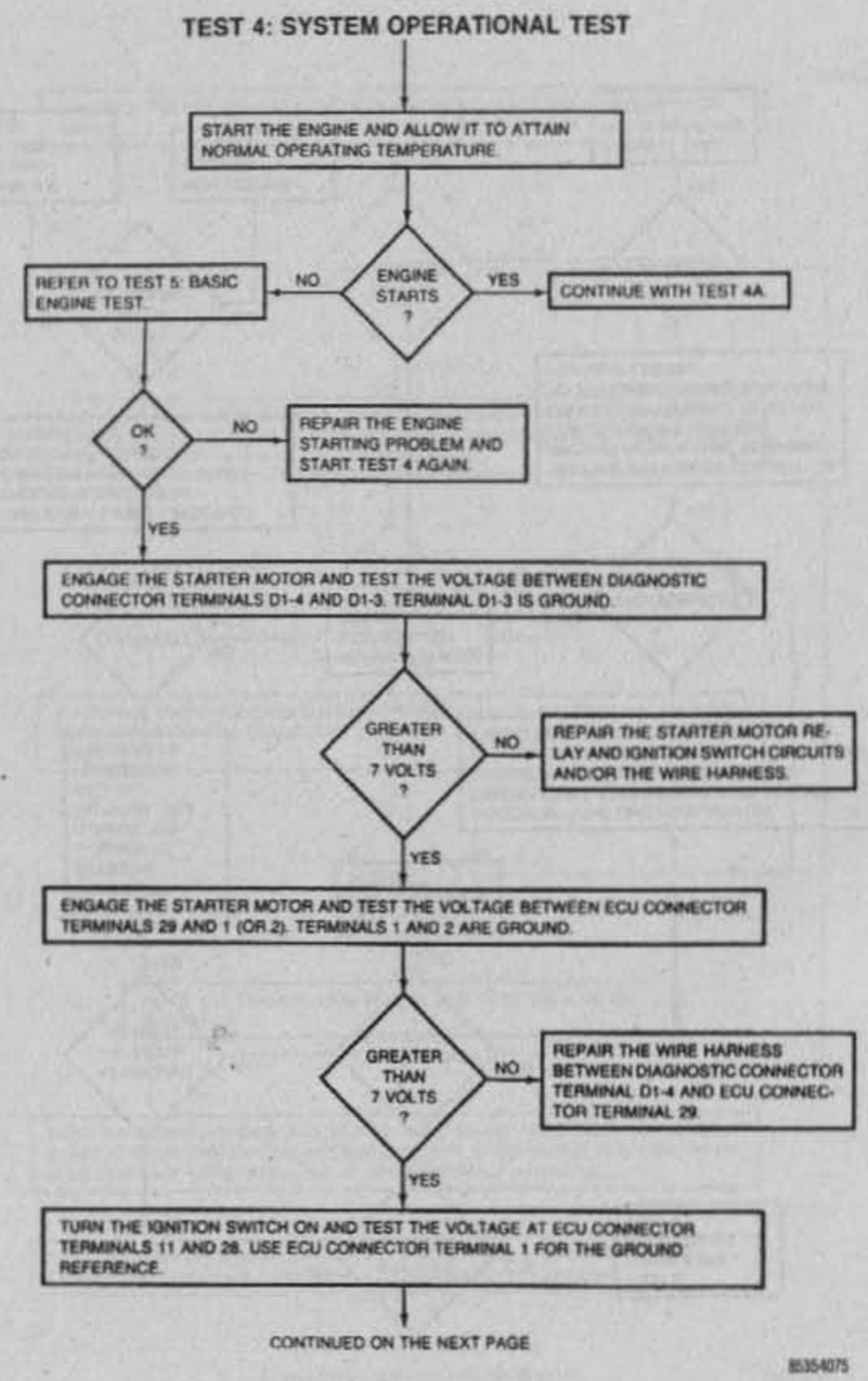

CONTINUED ON THE NEXT PAGE

Fig. 74 TBI system diagnostic test—1987–90 2.5L engine

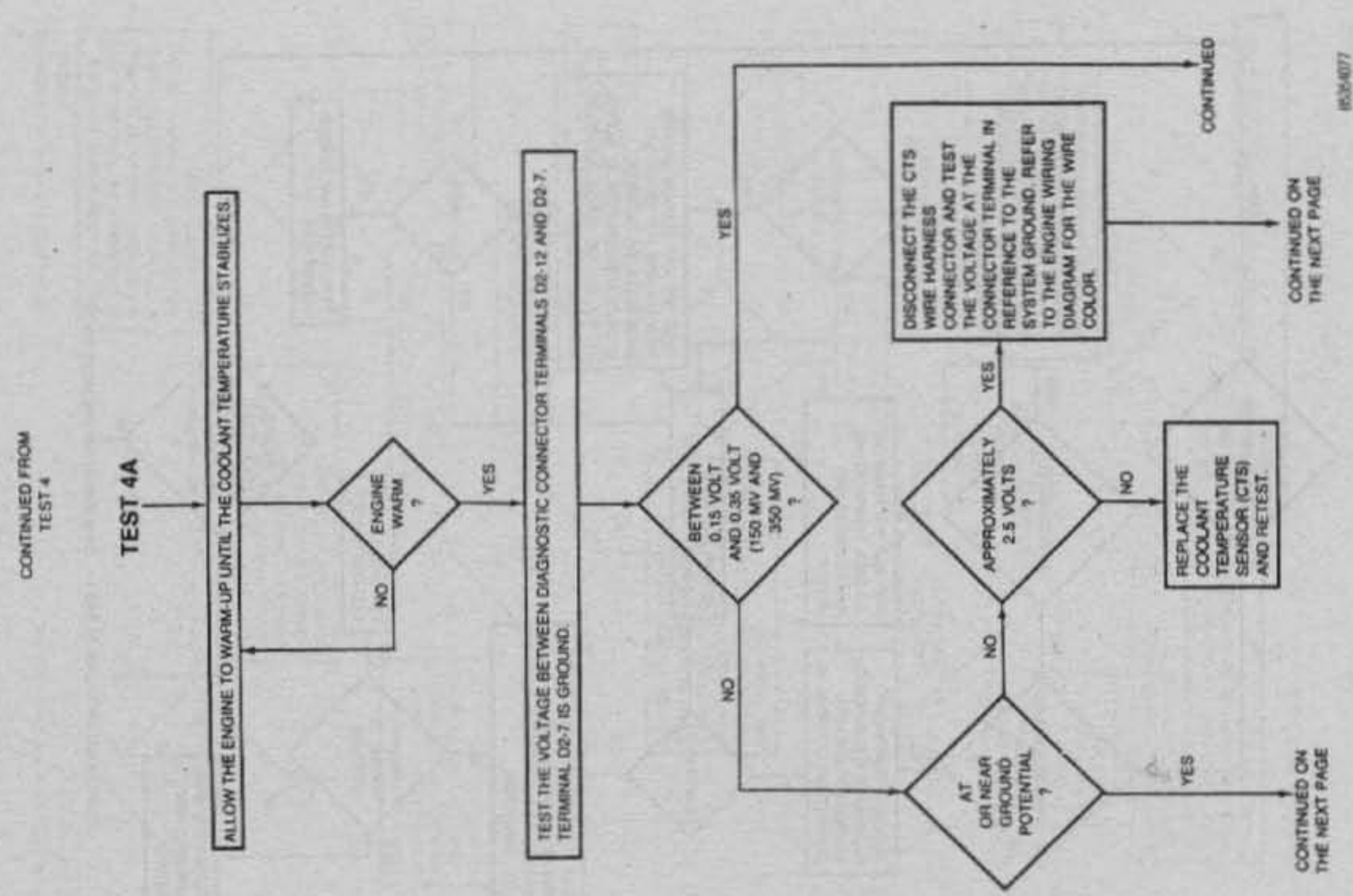

Fig. 76 TBI system diagnostic test—1987–90 2.5L engine

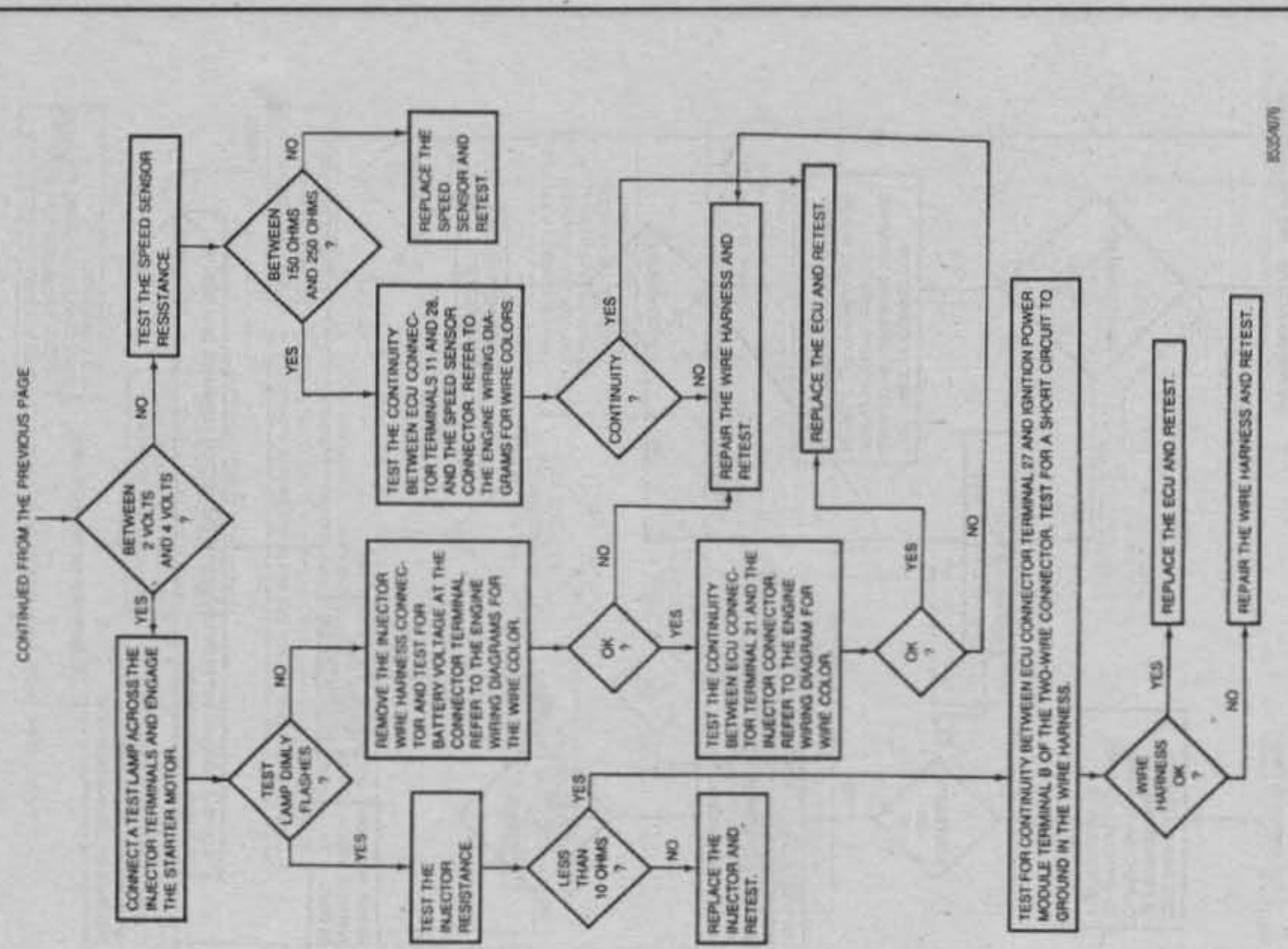

Fig. 75 TBI system diagnostic test—1987–90 2.5L engine

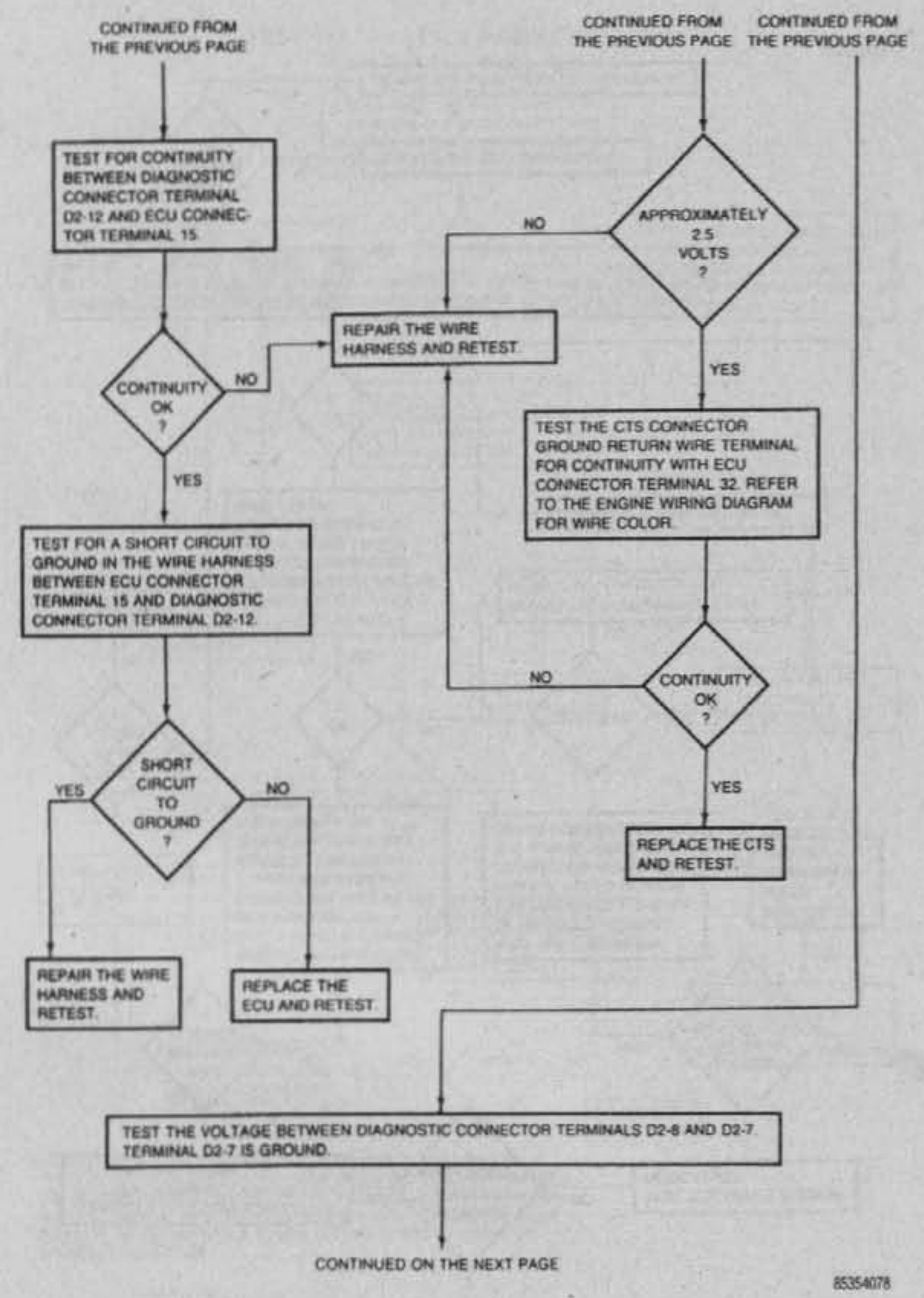

Fig. 77 TBI system diagnostic test—1987–90 2.5L engine

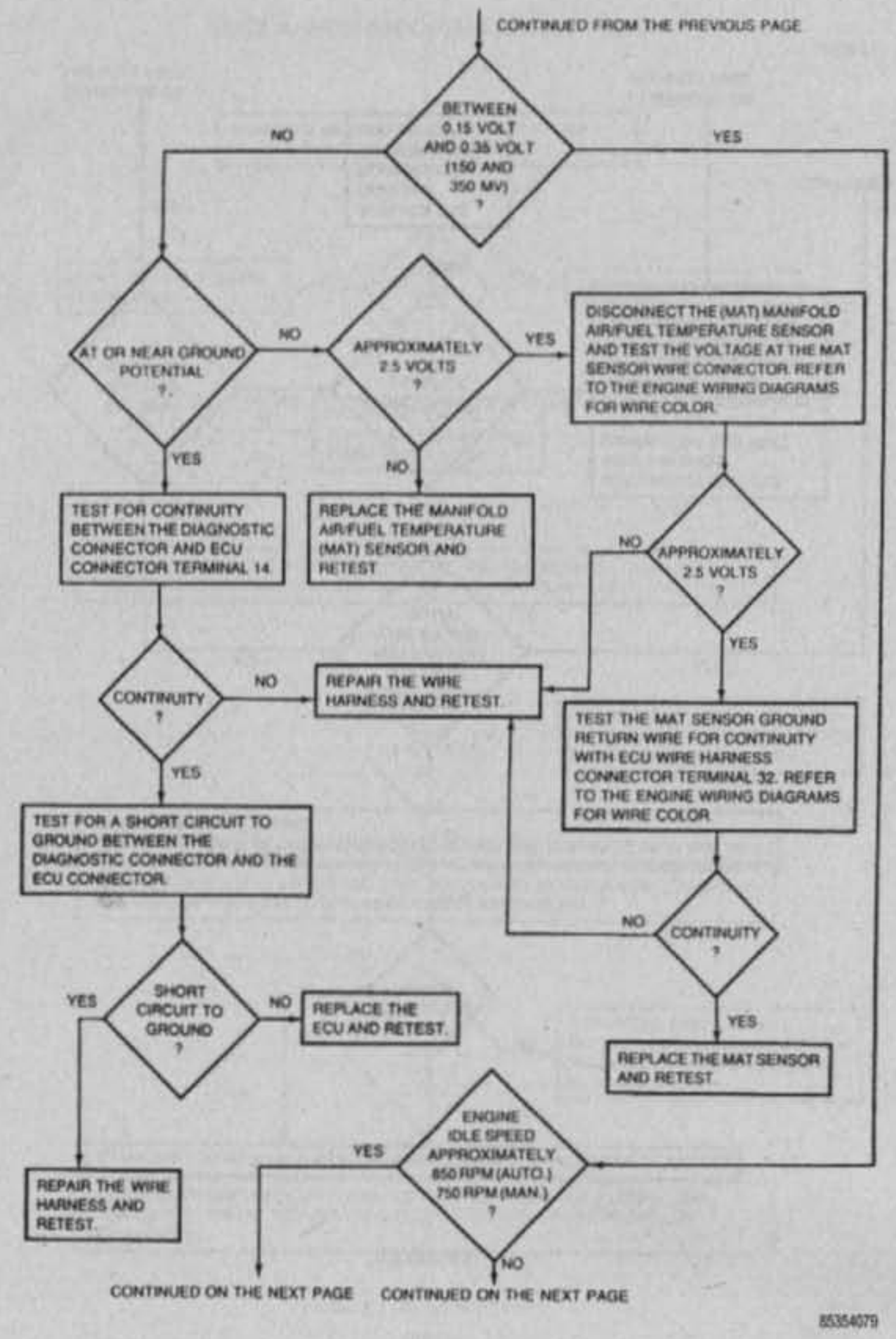

Fig. 78 TBI system diagnostic test—1987–90 2.5L engine

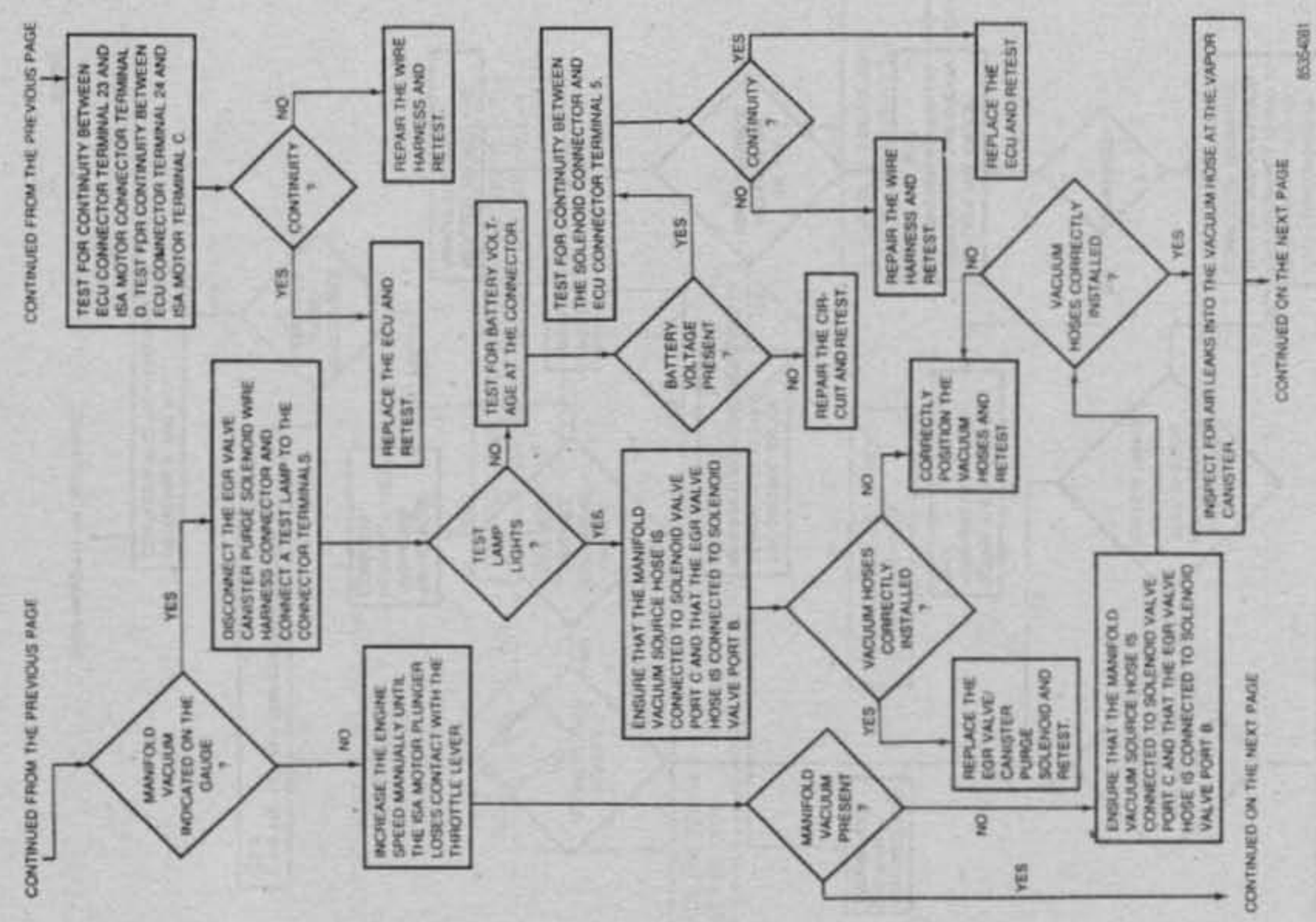

Fig. 80 TBI system diagnostic test—1987–90 2.5L engine

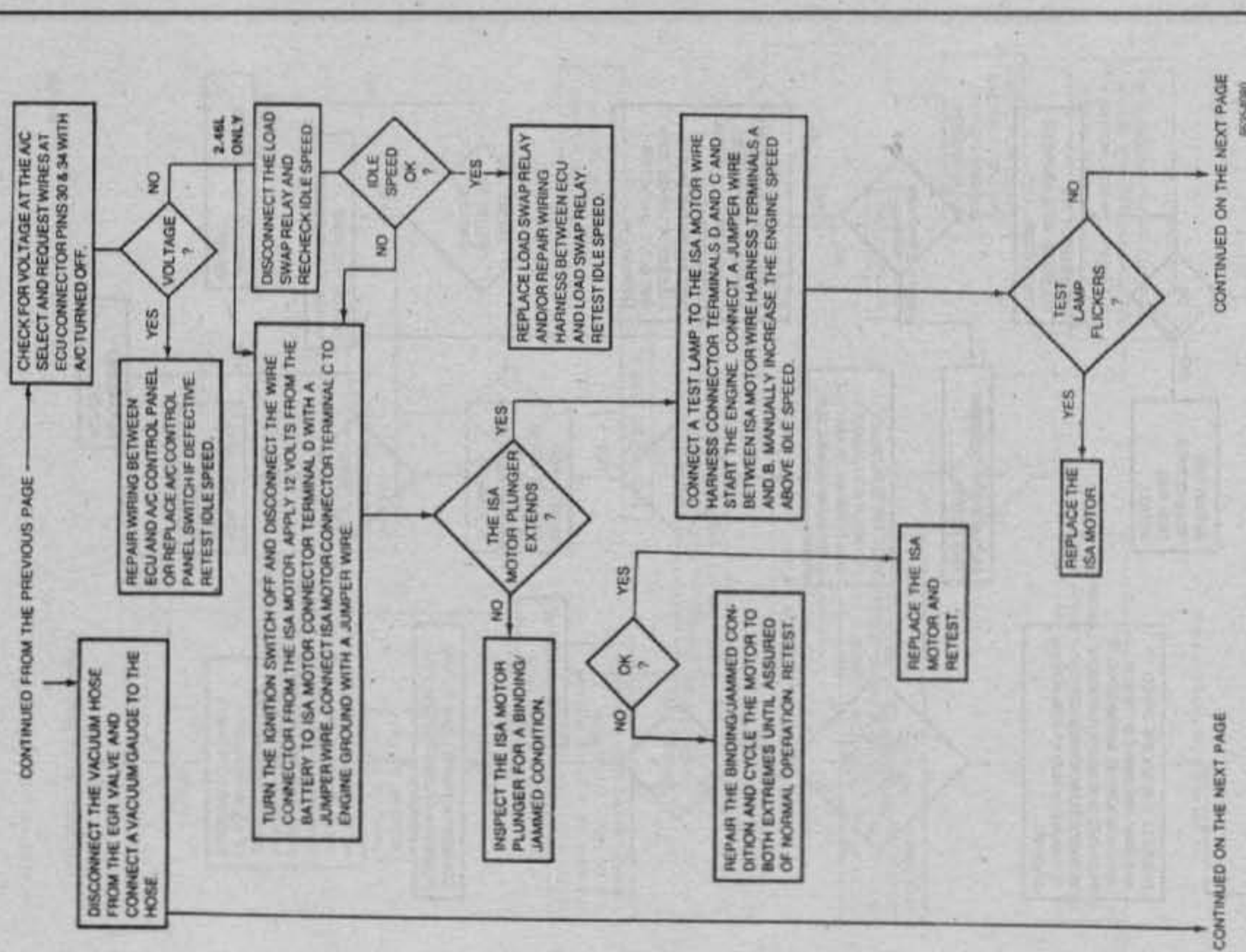

Fig. 79 TBI system diagnostic test—1987–90 2.5L engine

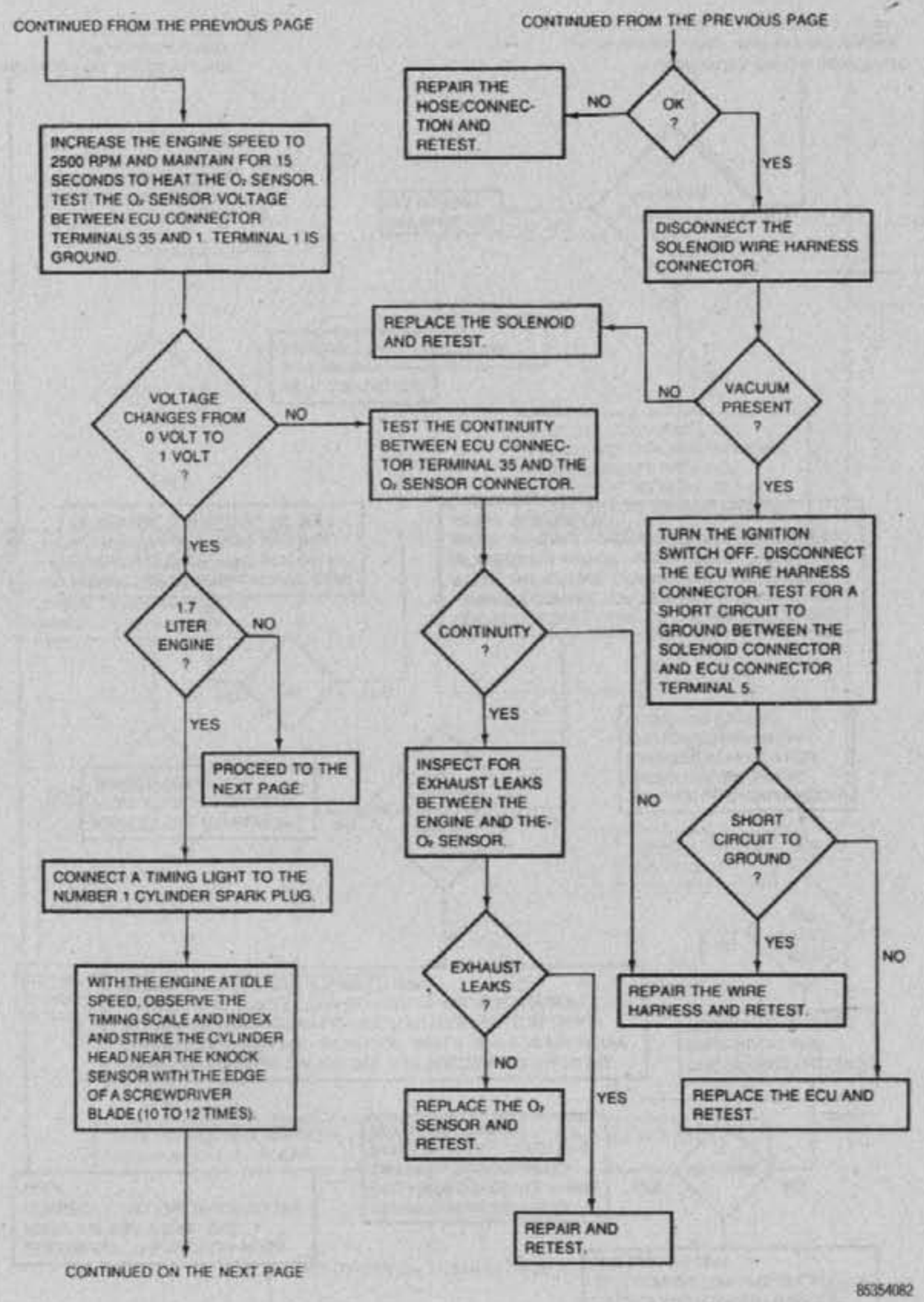

Fig. 81 TBI system diagnostic test—1987–90 2.5L engine

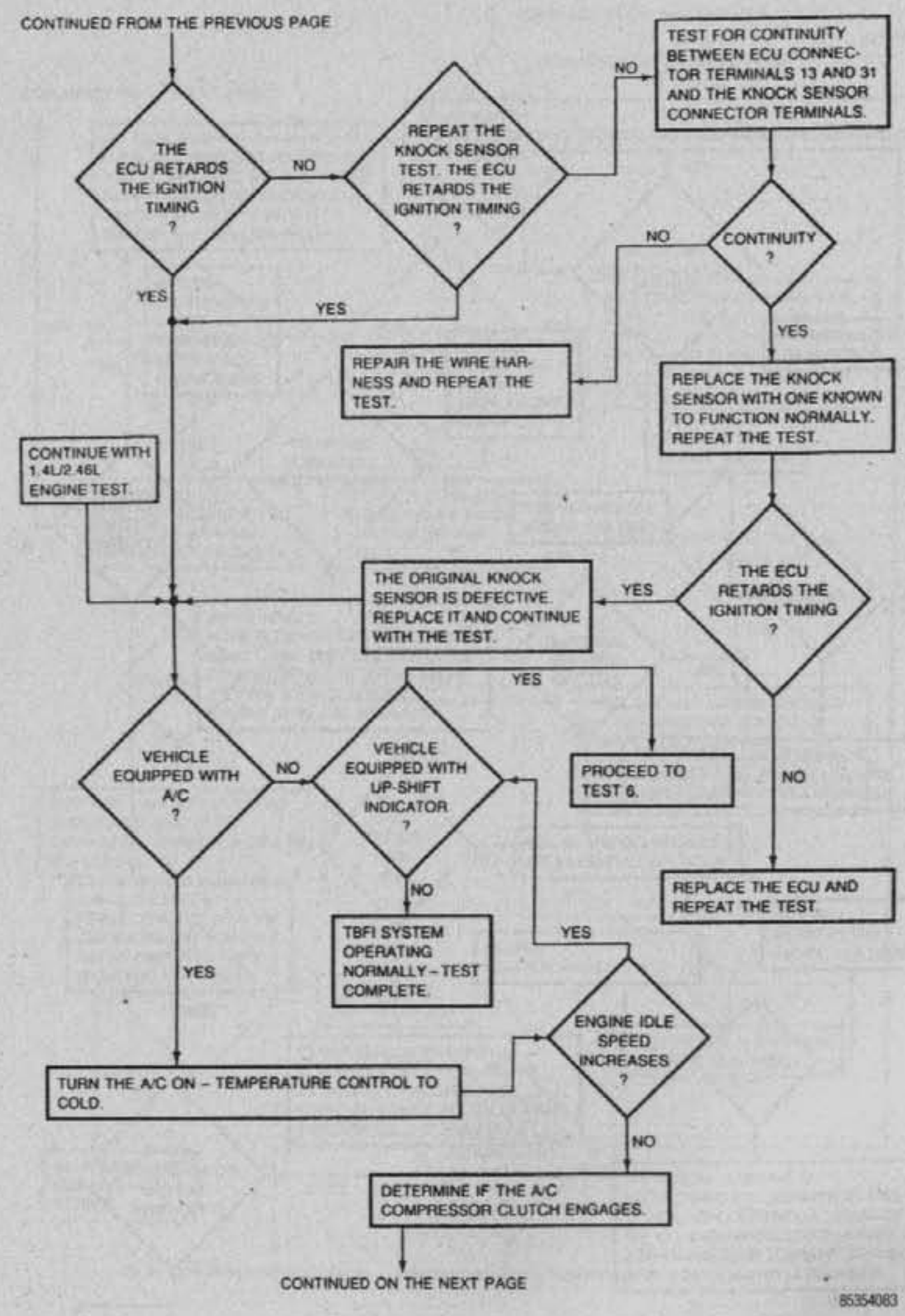

Fig. 82 TBI system diagnostic test—1987–90 2.5L engine

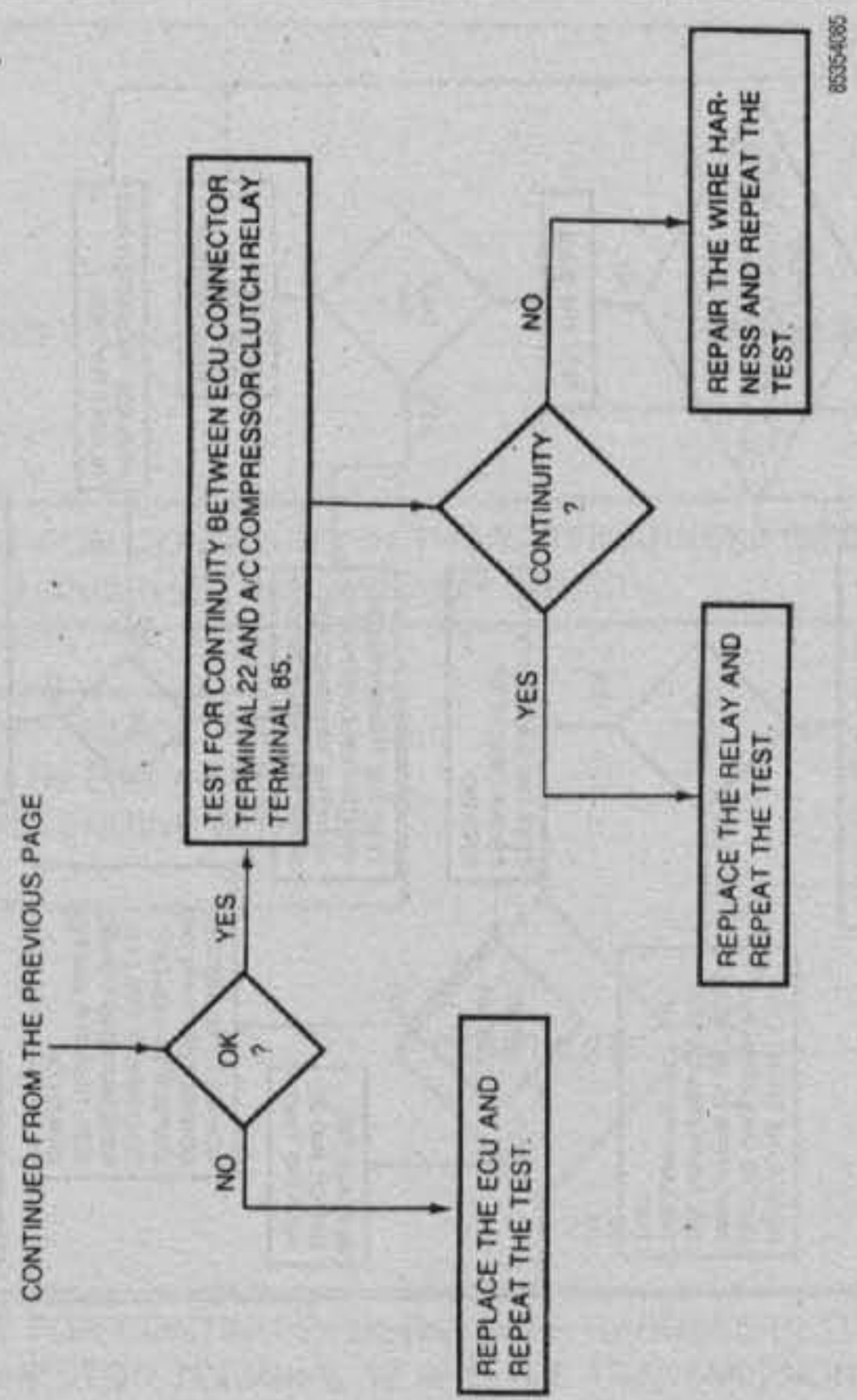

Fig. 84 TBI system diagnostic test—1987–90 2.5L engine

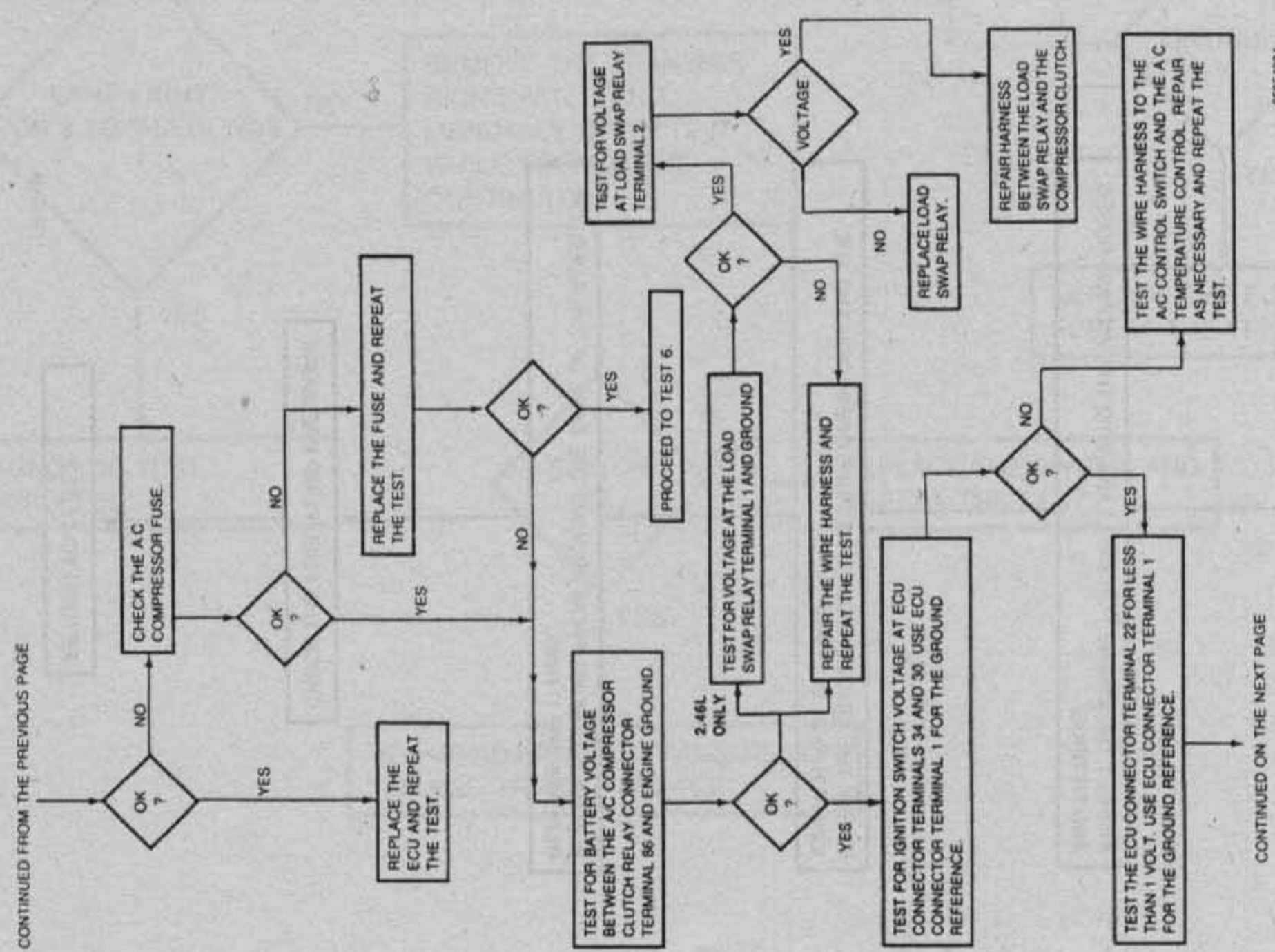

Fig. 83 TBI system diagnostic test—1987–90 2.5L engine

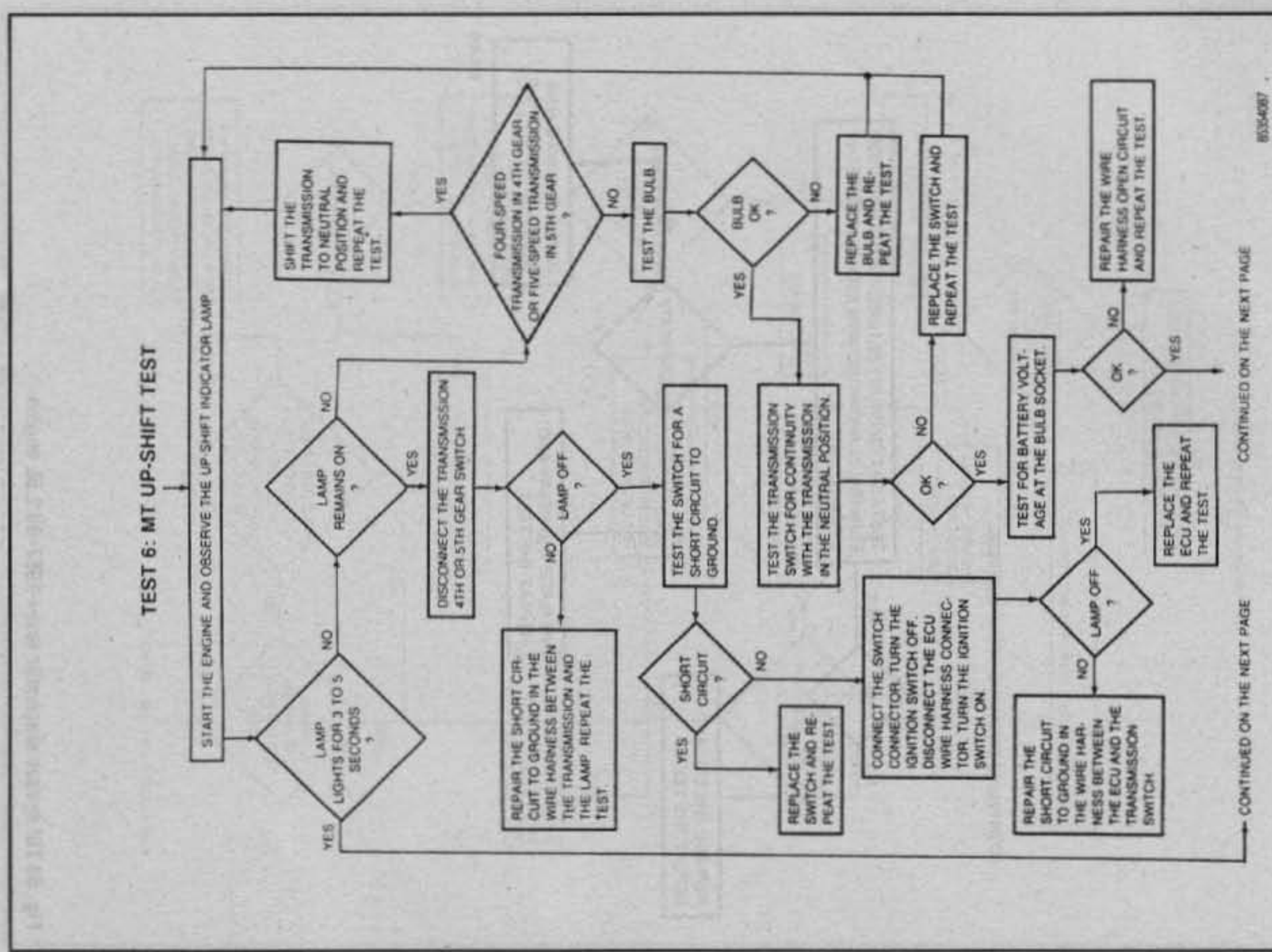

Fig. 86 TBI system diagnostic test—1987–90 2.5L engine

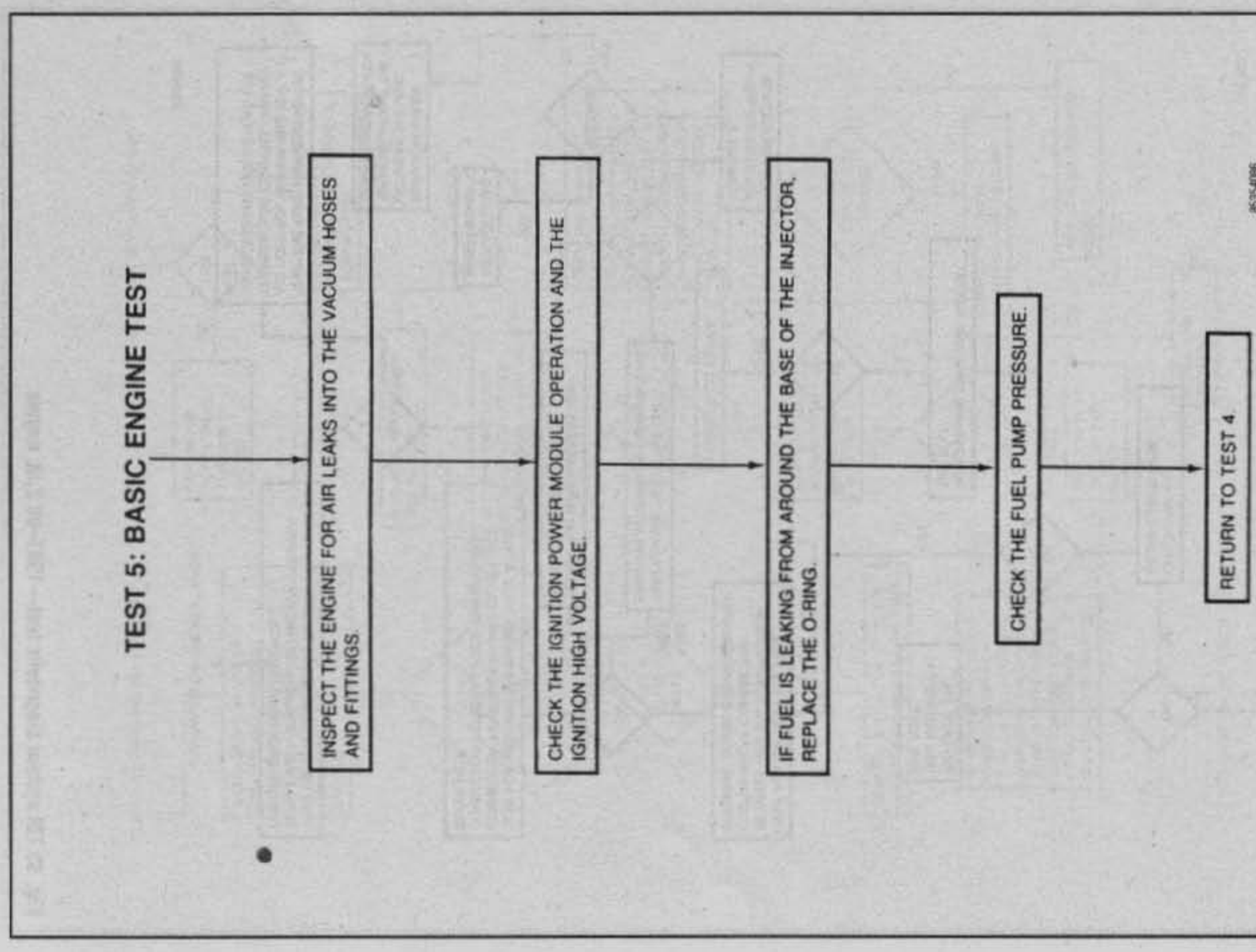

Fig. 85 TBI system diagnostic test—1987–90 2.5L engine

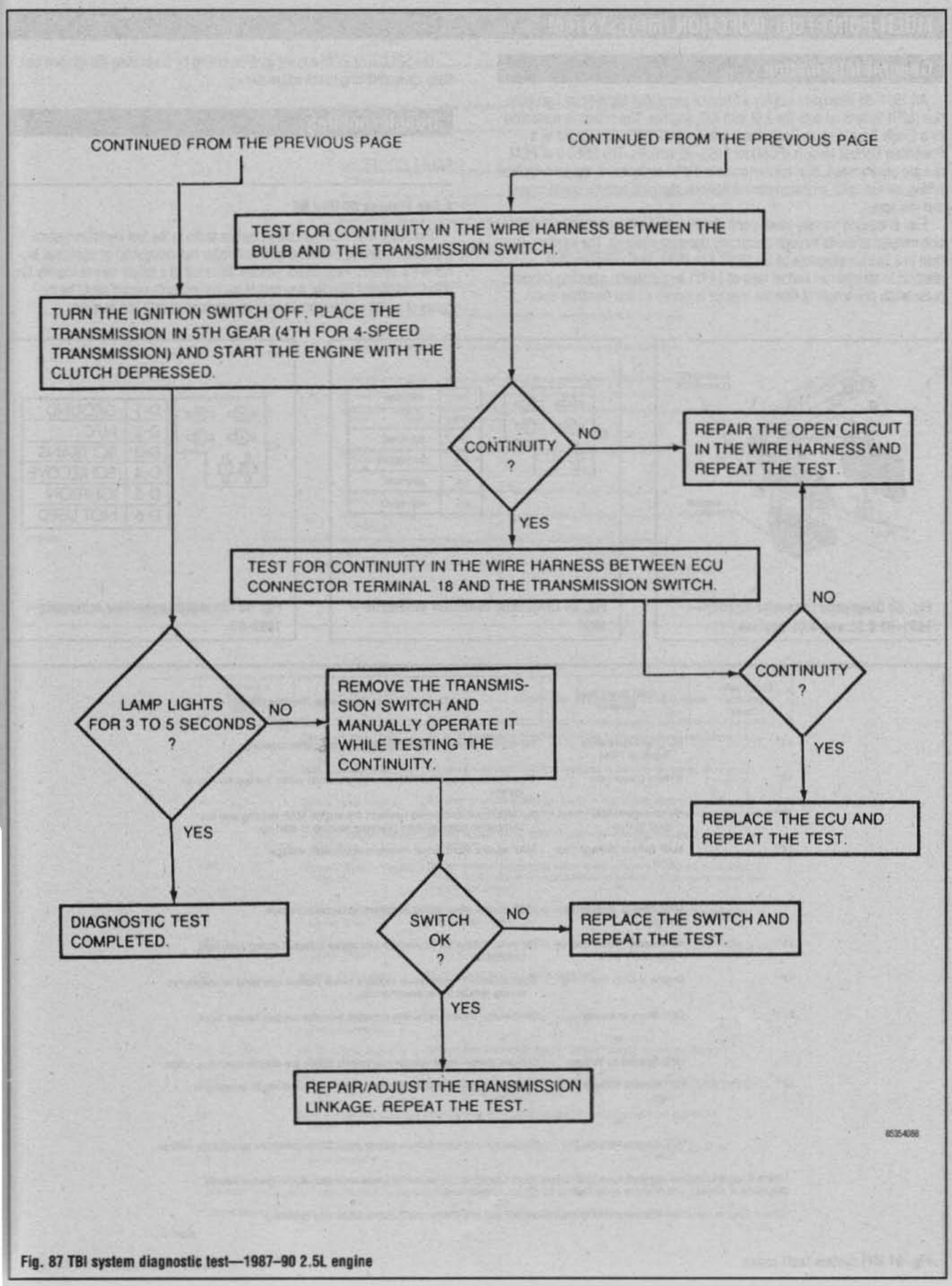

Fig. 87 TBI system diagnostic test—1987–90 2.5L engine

MULTI-POINT FUEL INJECTION (MFI) SYSTEM

General Information

All 1991–95 Wranglers employ a Chrysler sequential Multi-Point Fuel Injection (MFI) System on both the 2.5L and 4.0L engines. The system is controlled by a Single Board Engine Controller II (SBEC II) for 1991–92 vehicles or a Powertrain Control Module (PCM) for 1993–95 vehicles. The SBEC II or PCM is a pre-programmed, dual microprocessor digital computer. It regulates ignition timing, air-fuel ratio, emission control devices, charging system, speed control and idle speed.

Fuel is injected into the intake ports directly above the intake valves in precise metered amounts through electrically operated injectors. The injectors are fired in a specific sequence by the SBEC II or PCM. The control module attempts to maintain an air/fuel ratio of 14.7/1 by constantly adjusting injector pulse width (the length of time the injector is turned on and therefore open).

The SBEC II or PCM adjusts ignition timing by controlling the ignition coil. Base ignition timing is not adjustable.

Troubleshooting

FAULT CODES

♦ See Figures 88 thru 99

The SBEC II or PCM can detect certain faults in the fuel injection system. A fault code indicates that the engine controller has recognized an abnormal signal in the system. Fault codes indicate the result of a failure cannot identify the failed component directly. Any part of the component's circuit could be the cause of a fault and diagnosis must be approached with that in mind.

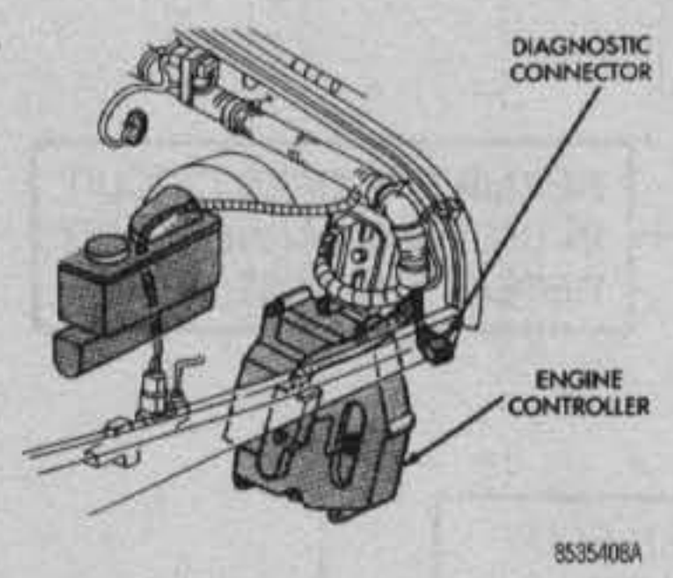

Fig. 88 Diagnostic connector location—1991–95 2.5L and 4.0L engines

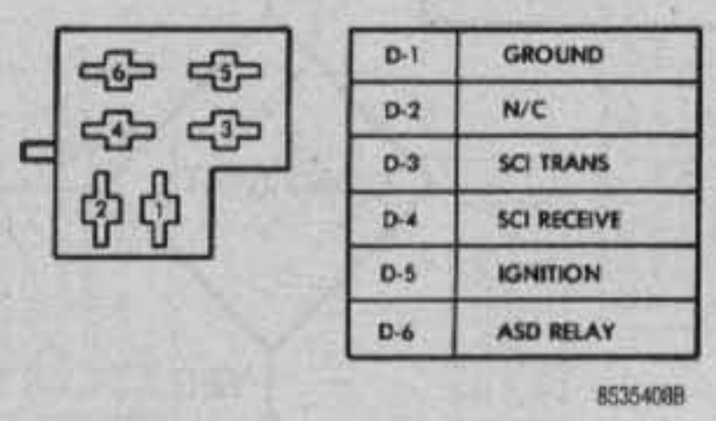

Fig. 89 Diagnostic connector schematic—1991

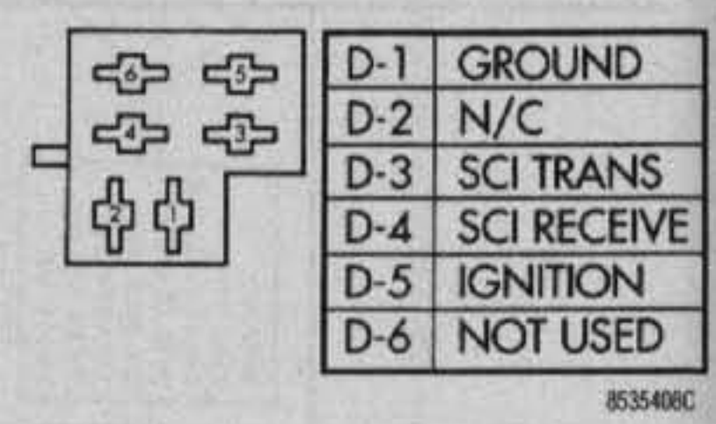

Fig. 90 Diagnostic connector schematic—1992–95

Diagnostic Trouble Code	DRB Scan Tool Display	Description of Diagnostic Trouble Code
11*	No Crank Reference Signal at PCM	No crank reference signal detected during engine cranking.
12*	Battery Disconnect	Direct battery input to PCM was disconnected within the last 50 Key-on cycles.
13**	No Change in MAP From Start to Run	No difference recognized between the engine MAP reading and the barometric (atmospheric) pressure reading at start-up.
14**	MAP Sensor Voltage Too Low	MAP sensor input below minimum acceptable voltage.
	or	
	MAP Sensor Voltage Too High	MAP sensor input above maximum acceptable voltage.
15**	No Vehicle Speed Sensor Signal	No vehicle distance (speed) sensor signal detected during road load conditions.
17*	Engine is Cold Too Long	Engine coolant temperature remains below normal operating temperatures during vehicle travel (thermostat).
21**	O2S Stays at Center	Neither rich or lean condition detected from the oxygen sensor input.
	or	
	O2S Shorted to Voltage	Oxygen sensor input voltage maintained above the normal operating range.
22**	ECT Sensor Voltage Too High	Engine coolant temperature sensor input above maximum acceptable voltage.
	or	
	ECT Sensor Voltage Too Low	Engine coolant temperature sensor input below minimum acceptable voltage.

* Check Engine Lamp will not illuminate at all times if this Diagnostic Trouble Code was recorded. Cycle Ignition key as described in manual and observe code flashed by Check Engine lamp.

** Check Engine Lamp will illuminate during engine operation if this Diagnostic Trouble Code was recorded.

85354258

Fig. 91 MFI system fault codes

Diagnostic Trouble Code	DRB Scan Tool Display	Description of Diagnostic Trouble Code
23**	Intake Air Temp Sensor Voltage Low	Intake air temperature sensor input below the minimum acceptable voltage.
	or	
	Intake Air Temp Sensor Voltage High	Intake air temperature sensor input above the maximum acceptable voltage.
24**	Throttle Position Sensor Voltage High	Throttle position sensor input above the maximum acceptable voltage.
	or	
	Throttle Position Sensor Voltage Low	Throttle position sensor input below the minimum acceptable voltage.
25**	Idle Air Control Motor Circuits	A shorted condition detected in one or more of the idle air control motor circuits.
27*	Injector #1 Control Circuit	Injector #1 output driver does not respond properly to the control signal.
	or	
	Injector #2 Control Circuit	Injector #2 output driver does not respond properly to the control signal.
	or	
	Injector #3 Control Circuit	Injector #3 output driver does not respond properly to the control signal.
	or	
	Injector #4 Control Circuit	Injector #4 output driver does not respond properly to the control signal.
	or	
	Injector #5 Control Circuit	Injector #5 output driver does not respond properly to the control signal.
	or	
	Injector #6 Control Circuit	Injector #6 output driver does not respond properly to the control signal.
33*	A/C Clutch Relay Circuit	An open or shorted condition detected in the A/C clutch relay circuit.
34*	Speed Control Solenoid Circuits	An open or shorted condition detected in the Speed Control vacuum or vent solenoid circuits.
	or	
	Speed Control Switch Always Low	Speed Control switch input below the minimum acceptable voltage.
	or	
	Speed Control Switch Always High	Speed Control switch input above the maximum acceptable voltage.
35* (XJ Only)	Rad Fan Control Relay Circuits	An open or shorted condition detected in the radiator fan relay circuit.

* Check Engine Lamp will not illuminate at all times if this Diagnostic Trouble Code was recorded. Cycle ignition key as described in manual and observe code flashed by Check Engine lamp.

** Check Engine Lamp will illuminate during engine operation if this Diagnostic Trouble Code was recorded.

85354259

Fig. 92 MFI system fault codes

Diagnostic Trouble Code	DRB Scan Tool Display	Description of Diagnostic Trouble Code
41**	Generator Field Not Switching Properly	An open or shorted condition detected in the generator field control circuit.
42*	Auto Shutdown Relay Control Circuit	An open or shorted condition detected in the auto shutdown relay circuit.
44*	Battery Temp Sensor Volts out of Limit	An open or shorted condition exists in the engine coolant temperature sensor circuit or a problem exists in the PCM's battery temperature voltage circuit
46**	Charging System Voltage Too High	Battery voltage sense input above target charging voltage during engine operation.
47**	Charging System Voltage Too Low	Battery voltage sense input below target charging during engine operation. Also, no significant change detected in battery voltage during active test generator output.
51**	O2S Signal Stays Below Center (Lean)	Oxygen sensor signal input indicates lean air/fuel ratio condition during engine operation.
52**	O2S Signal Stays Above Center (Rich)	Oxygen sensor signal input indicates rich air/fuel ratio condition during engine operation.
53*	Internal PCM Failure	PCM internal fault condition detected.
	or	
	PCM Failure SPI Communications	PCM internal fault condition detected.
54*	No Cam Sync Signal at PCM	No fuel sync (camshaft signal) detected during engine cranking.
55*	N/A	Completion of diagnostic trouble code display on the Malfunction Indicator Lamp (Check Engine Lamp).
62*	PCM Failure SPI miles not stored	Unsuccessful attempt to update SPI miles in the PCM EEPROM.
63*	PCM Failure EEPROM Write Denied	Unsuccessful attempt to write to an EEPROM location by the PCM.

* Check Engine Lamp will not illuminate at all times if this Diagnostic Trouble Code was recorded. Cycle ignition key as described in manual and observe code flashed by Check Engine lamp.

** Check Engine Lamp will illuminate during engine operation if this Diagnostic Trouble Code was recorded.

85354260

Fig. 93 MFI system fault codes

CAV	WIRE COLOR	DESCRIPTION
1	RD/WT*	MAP SENSOR
2	TN	COOLANT SENSOR
3	PK/YL*	DIRECT BATTERY VOLTAGE
4	BR/RD*	SENSOR GROUND (ENGINE CONTROLLER)
5	BK/YL*	GROUND SENSOR FOR FUEL SENDER
6	BR/YL*	5-VOLT OUTPUT (TO MAP & TPS)
7	WT/BK*	8-VOLT OUTPUT (TO DISTRIBUTOR PICK-UP)
8	DG/WT*	START SIGNAL
9	YL	IGNITION CIRCUIT SENSE
10	DB/OR*	P/S PRESSURE SENSOR
11	BK	POWER-GROUND
12	BK	POWER GROUND
13	YL	INJECTOR NO. 4
14	TN/YL*	INJECTOR NO. 3
15	LG	INJECTOR NO. 2
16	LB	INJECTOR NO. 1
17		
18		
19	YL/BK*	IGNITION COIL
20	TN/BK*	ALTERNATOR FIELD CONTROL
21	TN/DB*	MANIFOLD AIR TEMPERATURE (MAT) SENSOR
22	YL/DG*	THROTTLE POSITION SENSOR
23		
24	RD/DG*	CRANKSHAFT POSITION SENSOR (CPS)
25	BK/RD*	DIAGNOSTIC CONNECTOR
26		
27	LB/WT*	A/C REQUEST
28	LB/RD*	A/C SELECT
29	LB/YL*	BRAKE SWITCH
30	BK/WT*	PARK/NEUTRAL SWITCH (AUTO TRANS. ONLY)
31		
32	DG/RD*	CHECK ENGINE LAMP
33		
34	DB/WT*	A/C CLUTCH RELAY
35		
36		

CAV	WIRE COLOR	DESCRIPTION
37		
38		
39	DG/BK*	AIS MOTOR (TERMINAL D)
40	RD/YL*	AIS MOTOR (TERMINAL B)
41	GY	OXYGEN SENSOR
42		
43	OR	TACH SIGNAL OUTPUT (VEHICLE W/TACHOMETER)
44	GY/BK*	SYNC SENSOR
45	BK/PK*	DIAGNOSTIC CONNECTOR
46		
47	DB	VEHICLE DISTANCE (SPEED) SENSOR
48		
49		
50		
51	OR/DG*	FUEL PUMP RELAY/ASD RELAY
52		
53		
54	BR	SHIFT INDICATOR LIGHT (MANUAL TRANS. ONLY)
55		
56	DG/OR*	EMISSION MAINTENANCE REMINDER
57	DG/BK*	ALTERNATOR OUTPUT
58		
59	DB/YL*	AIS MOTOR (TERMINAL A)
60	PK/BK*	AIS MOTOR (TERMINAL C)

WIRE COLOR CODES					
		LB	LIGHT BLUE	VT	VIOLET
BK	BLACK	LG	LIGHT GREEN	WT	WHITE
BR	BROWN	OR	ORANGE	YL	YELLOW
DB	DARK BLUE	PK	PINK	*	WITH TRACER
DG	DARK GREEN	RD	RED		
GY	GRAY	TN	TAN		

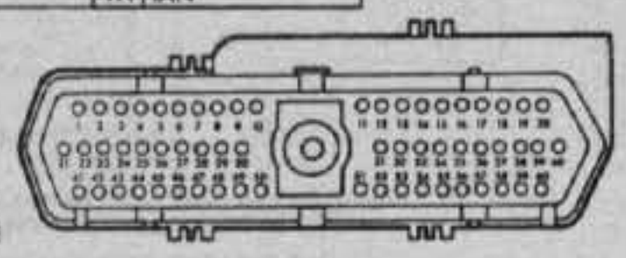

CONNECTOR TERMINAL SIDE SHOWN

85354104

Fig. 94 MFI engine controller connector—1991 with 2.5L engine

CAV	WIRE COLOR	DESCRIPTION
1	RD/WT*	MAP SENSOR
2	TN	COOLANT SENSOR
3	PK/YL*	DIRECT BATTERY VOLTAGE
4	BR/RD*	SENSOR GROUND (ENGINE CONTROLLER)
5	BK/YL*	GROUND SENSOR FOR FUEL SENDER
6	BR/YL*	5-VOLT OUTPUT (TO MAP & TPS)
7	WT/BK*	8-VOLT OUTPUT (TO DISTRIBUTOR PICK-UP)
8	DG/LG*	START SIGNAL
9	YL	IGNITION CIRCUIT SENSE
10		
11	BK	POWER-GROUND
12	BK	POWER GROUND
13	YL	INJECTOR NO. 4
14	TN/YL*	INJECTOR NO. 3
15	LG	INJECTOR NO. 2
16	LB	INJECTOR NO. 1
17		
18		
19	YL/BK*	IGNITION COIL
20	TN/BK*	ALTERNATOR FIELD CONTROL
21	TN/DB*	MANIFOLD AIR TEMPERATURE (MAT) SENSOR
22	YL/DG*	THROTTLE POSITION SENSOR
23		
24	RD/DG*	CRANKSHAFT POSITION SENSOR (CPS)
25	BK/RD*	DIAGNOSTIC CONNECTOR
26		
27	LB/WT*	A/C REQUEST
28	LB/RD*	A/C SELECT
29	LB/YL*	BRAKE SWITCH
30	BK/WT*	PARK/NEUTRAL SWITCH (AUTO TRANS. ONLY)
31		
32	DG/RD*	CHECK ENGINE LAMP
33		
34	DB/WT*	A/C CLUTCH RELAY
35		
36		

CAV	WIRE COLOR	DESCRIPTION
37		
38	WT	INJECTOR NO. 5
39	DG/BK*	AIS MOTOR (TERMINAL D)
40	RD/YL*	AIS MOTOR (TERMINAL B)
41	GY	OXYGEN SENSOR
42		
43	OR	TACH SIGNAL OUTPUT (VEHICLE W/TACHOMETER)
44	GY/BK*	SYNC SENSOR
45	BK/PK*	DIAGNOSTIC CONNECTOR
46		
47	DB	VEHICLE DISTANCE (SPEED) SENSOR
48		
49		
50		
51	OR/DG*	FUEL PUMP RELAY/ASD RELAY
52		
53		
54	BR	SHIFT INDICATOR LIGHT (MANUAL TRANS. ONLY)
55		
56	DG/OR*	EMISSION MAINTENANCE REMINDER
57	DG/BK*	ALTERNATOR OUTPUT
58	BR/DG*	INJECTOR NO. 6
59	DB/YL*	AIS MOTOR (TERMINAL A)
60	PK/BK*	AIS MOTOR (TERMINAL C)

WIRE COLOR CODES					
		LB	LIGHT BLUE	VT	VIOLET
BK	BLACK	LG	LIGHT GREEN	WT	WHITE
BR	BROWN	OR	ORANGE	YL	YELLOW
DB	DARK BLUE	PK	PINK	*	WITH TRACER
DG	DARK GREEN	RD	RED		
GY	GRAY	TN	TAN		

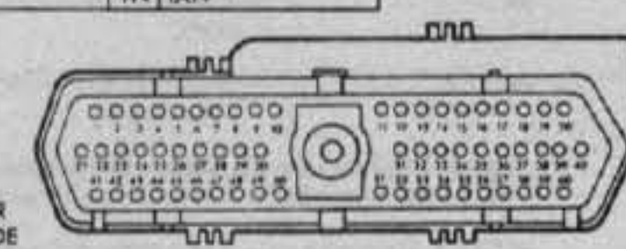

CONNECTOR TERMINAL SIDE SHOWN

85354105

Fig. 95 MFI engine controller connector—1991 with 4.0L engine

CAV	WIRE COLOR	DESCRIPTION
1	RD/WT*	MAP SENSOR
2	TN	COOLANT SENSOR
3	PK/YL*	DIRECT BATTERY VOLTAGE
4	BR/RD*	SENSOR GROUND (ENGINE CONTROLLER)
5	BK/YL*	GROUND SENSOR FOR FUEL SENDER
6	BR/YL*	5-VOLT OUTPUT (TO MAP & TPS)
7	WT/BK*	8-VOLT OUTPUT (TO DISTRIBUTOR PICK-UP)
8		
9	YL	IGNITION CIRCUIT SENSE
10	DB/OR*	P/S PRESSURE SENSOR
11	BK	POWER-GROUND
12	BK	POWER GROUND
13	YL	INJECTOR NO. 4
14	TN/YL*	INJECTOR NO. 3
15	LG	INJECTOR NO. 2
16	LB	INJECTOR NO. 1
17		
18		
19	YL/BK*	IGNITION COIL
20	TN/BK*	ALTERNATOR FIELD CONTROL
21	TN/DB*	MANIFOLD AIR TEMPERATURE (MAT) SENSOR
22	YL/DG*	THROTTLE POSITION SENSOR
23		
24	RD/DG*	CRANKSHAFT POSITION SENSOR (CPS)
25	BK/RD*	DIAGNOSTIC CONNECTOR
26		
27	LB/WT*	A/C REQUEST (FOR AFTERMARKET A/C)
28	LB/RD*	A/C SELECT (FOR AFTERMARKET A/C)
29	LB/YL*	BRAKE SWITCH
30		
31		
32	DG/RD*	CHECK ENGINE LAMP
33		
34	DB/WT*	A/C CLUTCH RELAY (FOR AFTERMARKET A/C)
35		
36		

CAV	WIRE COLOR	DESCRIPTION
37		
38		
39	DG/BK*	AIS MOTOR (TERMINAL D)
40	RD/YL*	AIS MOTOR (TERMINAL B)
41	GY	OXYGEN SENSOR
42		
43	OR	TACH SIGNAL OUTPUT (VEHICLE W/TACHOMETER)
44	GY/BK*	SYNC SENSOR
45	BK/PK*	DIAGNOSTIC CONNECTOR
46		
47	DB	VEHICLE DISTANCE (SPEED) SENSOR
48		
49		
50		
51	OR/DG*	FUEL PUMP RELAY/ASD RELAY
52		
53		
54	BR	SHIFT INDICATOR LIGHT (MANUAL TRANS. ONLY)
55		
56	DG/OR*	EMISSION MAINTENANCE REMINDER
57	DG/BK*	ALTERNATOR OUTPUT
58		
59	DB/YL*	AIS MOTOR (TERMINAL A)
60	PK/BK*	AIS MOTOR (TERMINAL C)

WIRE COLOR CODES					
		LB	LIGHT BLUE	VT	VIOLET
BK	BLACK	LG	LIGHT GREEN	WT	WHITE
BR	BROWN	OR	ORANGE	YL	YELLOW
DB	DARK BLUE	PK	PINK	*	WITH TRACER
DG	DARK GREEN	RD	RED		
GY	GRAY	TN	TAN		

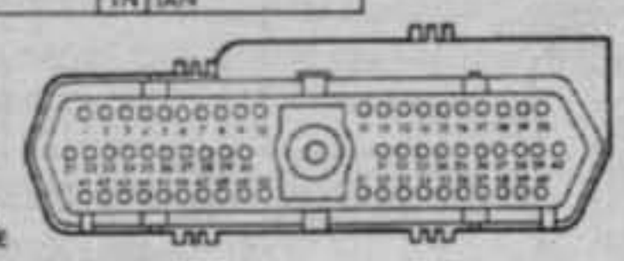

85354193

Fig. 96 MFI engine controller connector—1992 with 2.5L engine

CAV	WIRE COLOR	DESCRIPTION
1	RD/WT*	MAP SENSOR
2	TN	COOLANT SENSOR
3	PK/YL*	DIRECT BATTERY VOLTAGE
4	BR/RD*	SENSOR GROUND (ENGINE CONTROLLER)
5	BK/YL*	GROUND SENSOR FOR FUEL SENDER
6	BR/YL*	5-VOLT OUTPUT (TO MAP & TPS)
7	WT/BK*	8-VOLT OUTPUT (TO DISTRIBUTOR PICK-UP)
8		
9	YL	IGNITION CIRCUIT SENSE
10		
11	BK	POWER-GROUND
12	BK	POWER GROUND
13	YL	INJECTOR NO. 4
14	TN/YL*	INJECTOR NO. 3
15	LG	INJECTOR NO. 2
16	LB	INJECTOR NO. 1
17		
18		
19	YL/BK*	IGNITION COIL
20	TN/BK*	ALTERNATOR FIELD CONTROL
21	TN/DB*	MANIFOLD AIR TEMPERATURE (MAT) SENSOR
22	YL/DG*	THROTTLE POSITION SENSOR
23		
24	RD/DG*	CRANKSHAFT POSITION SENSOR (CPS)
25	BK/RD*	DIAGNOSTIC CONNECTOR
26		
27	LB/WT*	A/C REQUEST
28	LB/RD*	A/C SELECT
29	LB/YL*	BRAKE SWITCH
30	BK/WT*	PARK/NEUTRAL SWITCH (AUTO TRANS. ONLY)
31		
32	DG/RD*	CHECK ENGINE LAMP
33		
34	DB/WT*	A/C CLUTCH RELAY
35		
36		

CAV	WIRE COLOR	DESCRIPTION
37		
38	WT	INJECTOR NO. 5
39	DG/BK*	AIS MOTOR (TERMINAL D)
40	RD/YL*	AIS MOTOR (TERMINAL B)
41	GY	OXYGEN SENSOR
42		
43	OR	TACH SIGNAL OUTPUT (VEHICLE W/TACHOMETER)
44	GY/BK*	SYNC SENSOR
45	BK/PK*	DIAGNOSTIC CONNECTOR
46		
47	DB	VEHICLE DISTANCE (SPEED) SENSOR
48		
49		
50		
51	OR/DG*	FUEL PUMP RELAY/ASD RELAY
52		
53		
54	BR	SHIFT INDICATOR LIGHT (MANUAL TRANS. ONLY)
55		
56	DG/OR*	EMISSION MAINTENANCE REMINDER
57	DG/BK*	ALTERNATOR OUTPUT
58	BR/DG*	INJECTOR NO. 6
59	DB/YL*	AIS MOTOR (TERMINAL A)
60	PK/BK*	AIS MOTOR (TERMINAL C)

WIRE COLOR CODES					
		LB	LIGHT BLUE	VT	VIOLET
BK	BLACK	LG	LIGHT GREEN	WT	WHITE
BR	BROWN	OR	ORANGE	YL	YELLOW
DB	DARK BLUE	PK	PINK	*	WITH TRACER
DG	DARK GREEN	RD	RED		
GY	GRAY	TN	TAN		

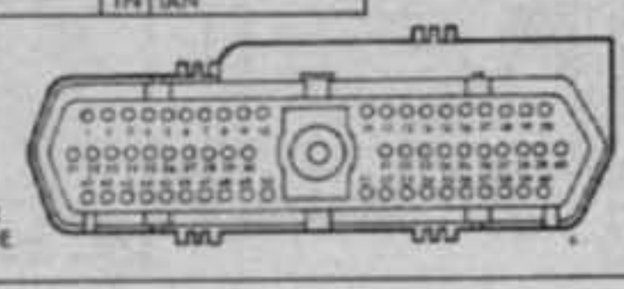

85354194

Fig. 97 MFI engine controller connector—1992 with 4.0L engine

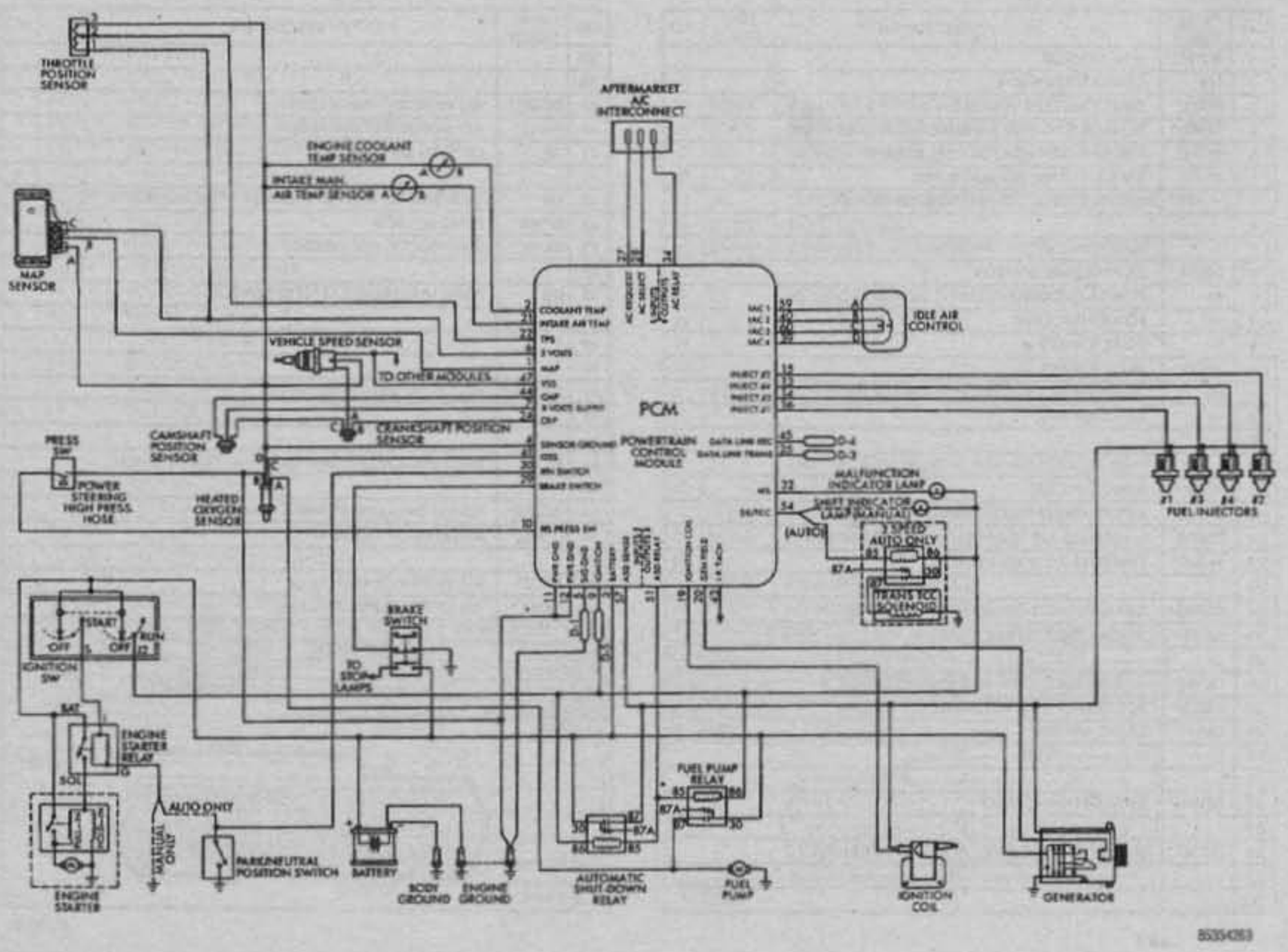

Fig. 98 MFI system schematic—1993–95 with 2.5L engine

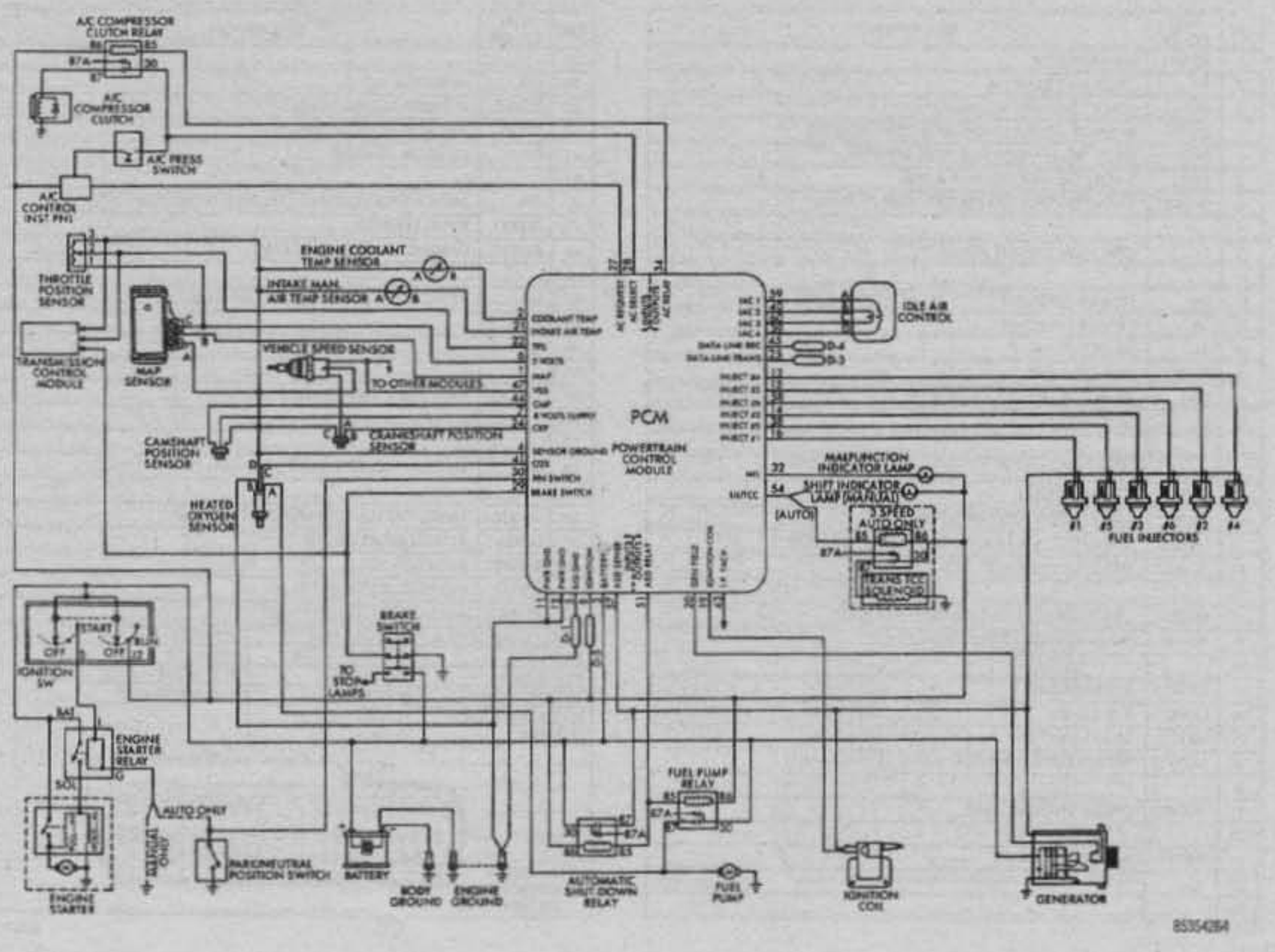

Fig. 99 MFI system schematic—1993–95 with 4.0L engine

Fault codes can be obtained by cycling the ignition switch **ON-OFF-ON-OFF-ON** within 3–5 seconds. Upon activation of the trouble code read-out, fault codes will be flashed by the check engine light. Each of the flash represents a digit in the fault code. Please refer to the fault code description charts followed by the corresponding diagnostic tests, later in this section to help troubleshoot fault codes.

➡A Diagnostic Readout Box (DRB) may be necessary for diagnosis of certain engine malfunctions.

SYSTEM SELF-DIAGNOSTICS

The first test performed by the SBEC II or PCM is for sensor output. If there is a problem with a circuit, the controller tests for an open circuit, short to ground and short to 12 volts. The second test determines if the oxygen sensor is functioning properly.

Systems not monitored by the system self-diagnostics include the following:

- Fuel Pressure—The system cannot detect a clogged fuel pump filter, inline filter or a pinched fuel line. However, these could result in a rich or lean condition causing an oxygen sensor fault to be stored.
- Secondary Ignition Circuit—The system cannot detect faulty ignition coil, fouled or worn spark plugs, ignition cross-firing, or open spark plug cables.
- Engine Timing—The system cannot detect an incorrectly indexed timing chain, camshaft/crankshaft sprocket, or distributor. However these may cause a rich or lean condition causing an oxygen sensor fault to be stored.
- Cylinder Compression—The system cannot detect uneven, low, or high cylinder compression.
- Exhaust System—The system cannot detect a plugged, restricted or leaking exhaust system.
- Fuel Injector Malfunctions—The system cannot detect of a fuel injector is clogged, the pintle is sticking or the wrong injector is installed. However these may cause a rich or lean condition causing an oxygen sensor fault to be stored.
- Excessive Oil Consumption—Although the system monitors the exhaust stream, it cannot detect excessive oil consumption.
- Throttle Body Air Flow—The system cannot detect a clogged or restricted air cleaner inlet or filter element.
- Evaporative System—The system cannot detect a clogged or restricted evaporative purge canister.
- Vacuum Assist—Leaks or restriction in the vacuum circuits of engine control devices are not monitored by the system. However, these could result in a MAP sensor fault being stored.
- SBEC II or PCM System Ground—The system cannot determine a poor system ground. However, a fault code may be generated as a result of this condition.
- SBEC II or PCM Connector Engagement—The system cannot determine spread or damaged connector pins. However, a fault code may be generated as a result of this condition.

TEMPERATURE		RESISTANCE (OHMS)	
C	F	MIN	MAX
-40	-40	291,490	381,710
-20	-4	85,850	108,390
-10	14	49,250	61,430
0	32	29,330	35,990
10	50	17,990	21,810
20	68	11,370	13,610
25	77	9,120	10,880
30	86	7,370	8,750
40	104	4,900	5,750
50	122	3,330	3,880
60	140	2,310	2,670
70	158	1,630	1,870
80	176	1,170	1,340
90	194	860	970
100	212	640	720
110	230	480	540
120	248	370	410

85354089

Fig. 100 Coolant and manifold air temperature sensor resistance values—1991–95 2.5L and 4.0L engines

COMPONENT TESTING

One of the most common problems with electronic engine control systems results not from a faulty component, but from a bad circuit which is caused by loose, dirty or corroded connections. Always begin diagnosis by checking all wiring and hoses from proper connections, routing and lack of physical damage.

If a visual inspection does not turn up the problem, proceed with component testing in order to troubleshoot the condition. As necessary, refer to other sections of this manual for additional information on engine, fuel and ignition system components.

Coolant Temperature Sensor (CTS) Test

◗ See Figures 100 and 101

Disengage the wire harness connector from the CTS and measure the resistance of the sensor with a high input impedance (digital) volt-ohmmeter. With the engine warm, the resistance should be less than 1000 ohms for 1991–92 vehicles and less than 1340 ohms for 1993 and later vehicles. Refer to the resistance chart and replace the sensor if it is not within the range of resistance specified in the chart. Measure the resistance of the wire harness between engine controller wire harness connector terminal 2 and the sensor connector terminal, as well as between terminal 4 and the sensor connector terminal. Repair the wire harness if an open circuit is indicated.

Manifold Air Temperature (MAT) Sensor Test (1991–92)

◗ See Figures 102 and 103

Disengage the wire harness connector from the MAT sensor and measure the resistance of the sensor with a high input impedance (digital) volt-ohmmeter. The resistance should be less than 1000 ohms with the engine warm. Refer to the resistance chart and replace the sensor if it is not within the range of resistance specified in the chart. Measure the resistance of the wire harness between engine controller wire harness connector terminal 2 and the sensor connector terminal, as well as between terminal 4 and the sensor connector terminal. Repair the wire harness if the resistance is greater than 1 ohm.

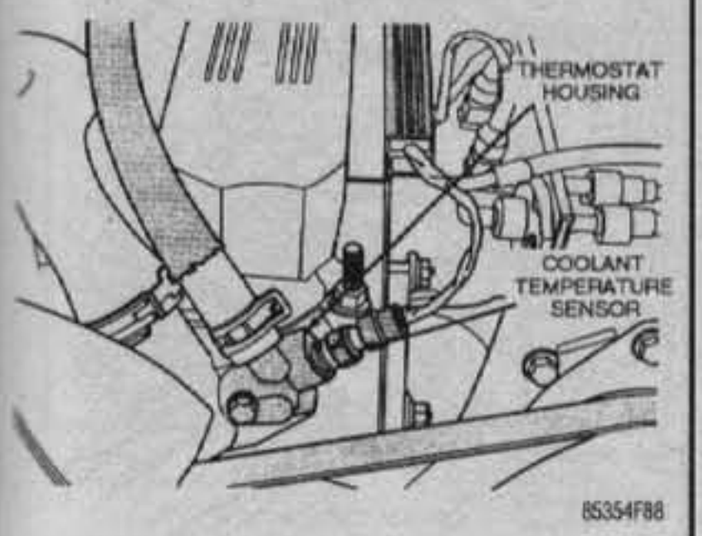

Fig. 101 Coolant temperature sensor location—1991–95 2.5L and 4.0L engines

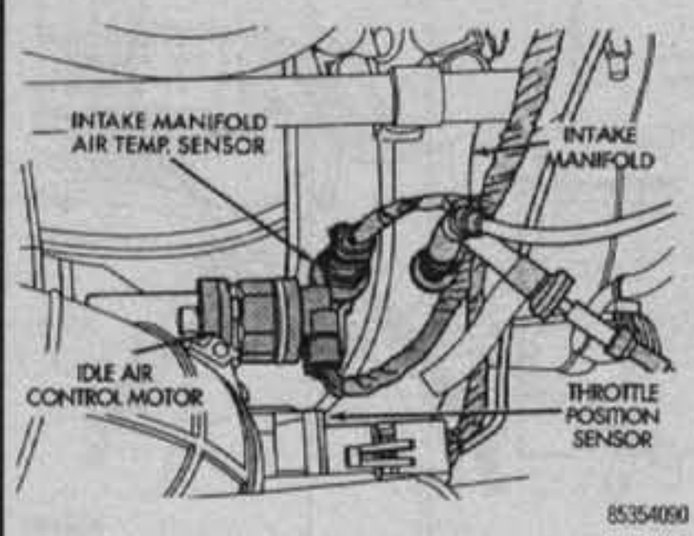

Fig. 102 Manifold air temperature sensor location—1991–95 2.5L engine

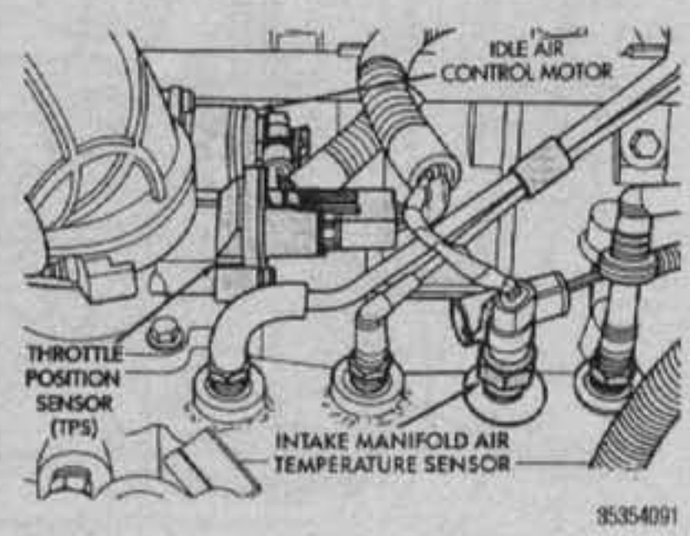

Fig. 103 Manifold air temperature sensor location—1991–95 4.0L engine

Manifold Absolute Pressure (MAP) Sensor Test

See Figures 104 and 105

1. Inspect the MAP sensor vacuum hose connection at the throttle body and sensor, then repair as necessary.
2. Test the MAP sensor output voltage at the sensor connector terminal B (as marked on the sensor body) with the ignition switch **ON** and the engine **OFF**. The output voltage should be 4–5 volts.

➡The voltage should drop to 0.5–1.5 volts with a hot, neutral idle speed condition.

3. Test engine controller terminal 5 for the same voltage as in Step 2 to verify the wire harness condition. Repair any problems, as necessary.
4. Test the MAP sensor supply voltage at the sensor connector terminal C with the ignition **ON**. The voltage should be 4.5–5.5 volts. The same voltage should be present at terminal 6 of the engine controller wire harness connector. Repair or replace the wire harness, as necessary. If the engine controller is suspect, use Diagnostic Tester M.S.1700, or equivalent, to test engine controller function.
5. Test the MAP sensor ground circuit at the sensor connector terminal A and engine controller connector terminal 4. Repair the wire harness as necessary.
6. Test the MAP sensor ground circuit at the engine controller connector between terminal 4 and terminal 11 with an ohmmeter. If the ohmmeter indicates an open circuit, check for a defective sensor ground connection located on the right side of the cylinder block. If the ground connection is good, replace the engine controller.

➡If terminal 4 has a short circuit to 12 volts, correct this condition before replacing the engine controller.

Oxygen Sensor Heating Element Test

See Figure 106

Disengage the O_2sensor connector, then install ohmmeter test leads to terminals **A** and **B** of the sensor connector for 1991 vehicles or across the white wire terminals of the connector for 1992–95 vehicles. The resistance should be 5–7 ohms. Replace the O_2sensor if the ohmmeter displays an infinity reading.

➡Oxygen sensor operational testing requires the use of a special tester M.S.1700, or equivalent.

Crankshaft Position (Speed) Sensor Test

See Figures 107 and 108

Disengage the speed sensor connector from the ignition control module, then install an ohmmeter between terminals **A** and **B** as marked on the connector. The ohmmeter should read 125–275 ohms on a hot engine for 1991 vehicles and no resistance for 1992–95 vehicles. Replace the sensor if the readings are not as stated.

Starter Relay Testing

See Figures 109 and 110

A relay in the de-energized position should have continuity between terminals 87A and 30. Resistance values between terminals 85 and 86 is 70–80 ohms for resistor relays and 81–91 ohms for diode relays. Not all relays have battery voltage connected to terminal 30. Some may have battery voltage connected to terminals 87 or 87A.

Sync Pulse (Stator) Test (1991–92 only)

1. At the distributor connector, insert the positive (+) lead of a voltmeter into the gray with black tracer wire and the negative (–) lead into the brown with red tracer wire.

➡Do not disengage the distributor connector from the distributor. Instead carefully insert the voltmeter leads into the back side of the connector to make contact with the terminals.

2. Set the voltmeter on the 15 volt AC scale and turn the ignition switch **ON**. The voltmeter should read approximately 5 volts. If there is no voltage, check the voltmeter leads for a good connection.

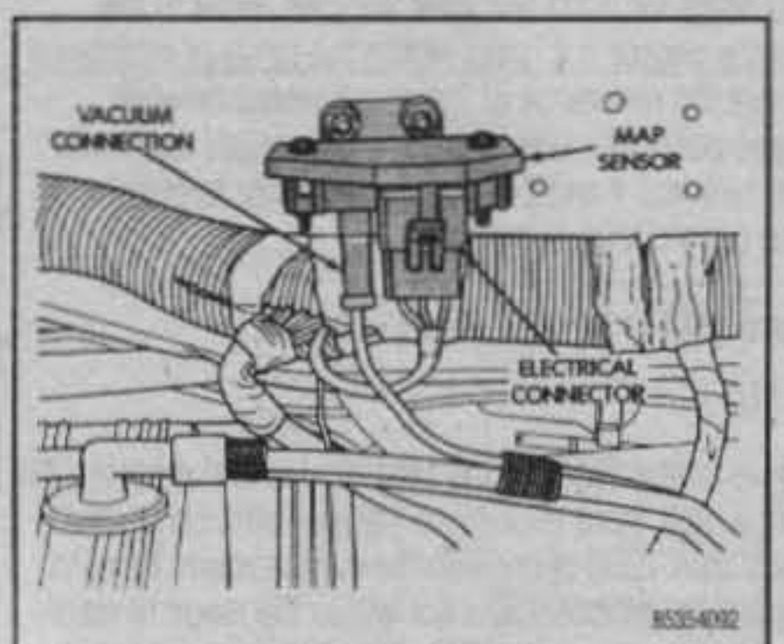

Fig. 104 MAP sensor location—1991–95 2.5L and 4.0L engines

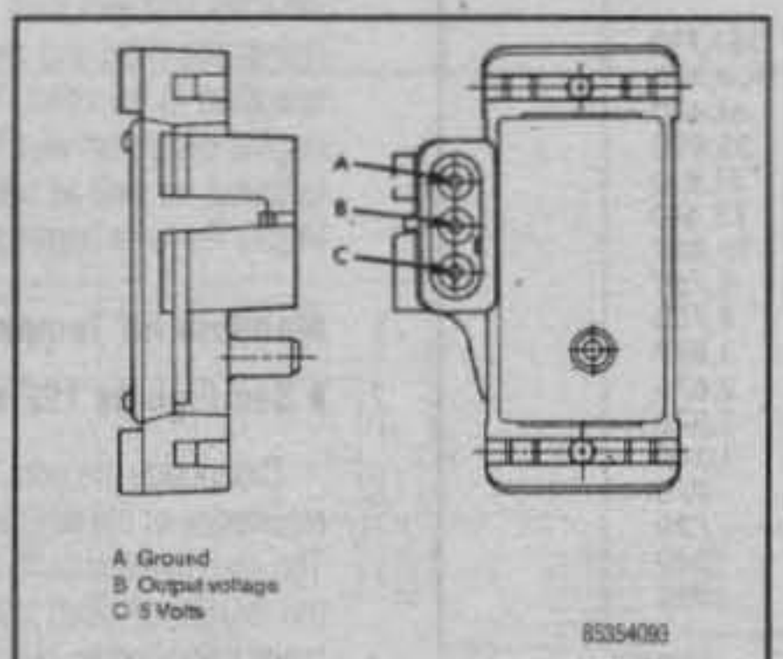

Fig. 105 MAP sensor connector terminals—1991–95 4.0L engine

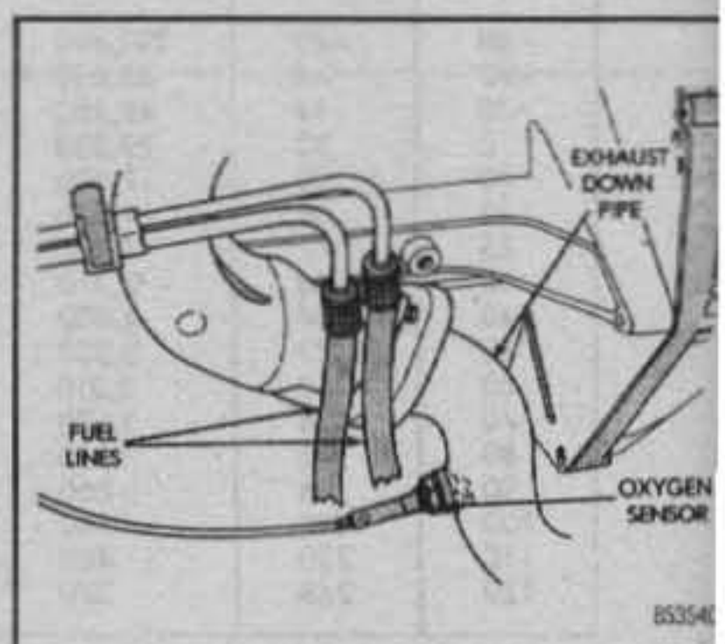

Fig. 106 Oxygen sensor location—1991–95 2.5L and 4.0L engines

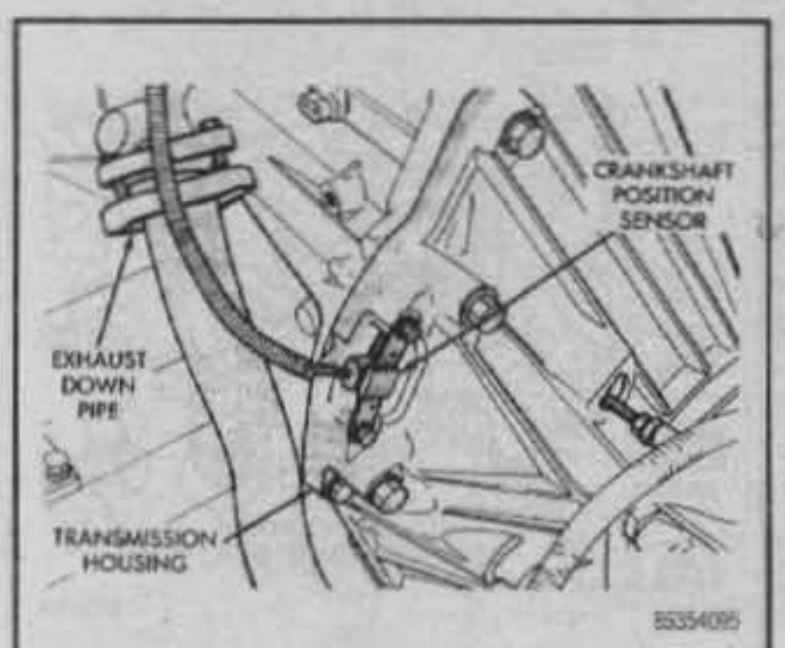

Fig. 107 Crankshaft position sensor location—1991–95 2.5L engine

Fig. 108 Crankshaft position sensor location—1991–95 4.0L engines

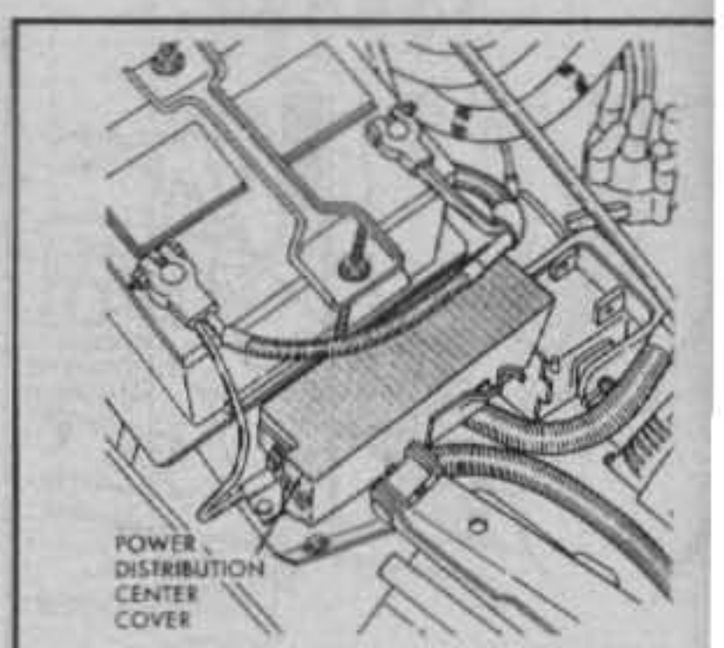

Fig. 109 Power distribution center location—1991–95

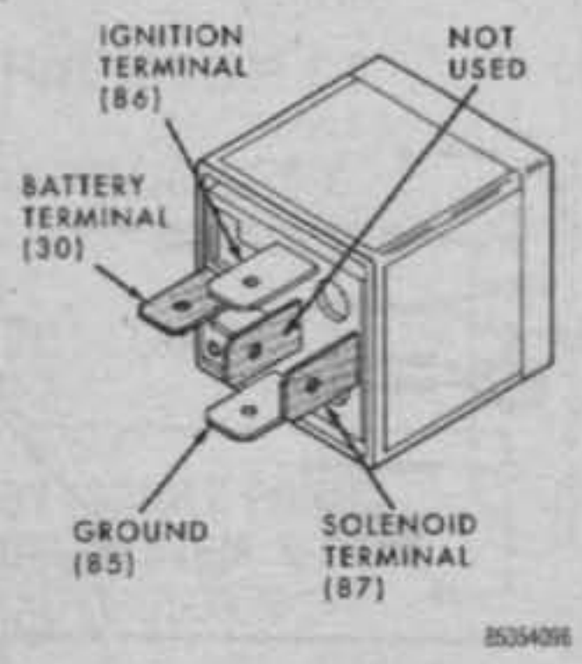

Fig. 110 Starter relay connections—1991–95

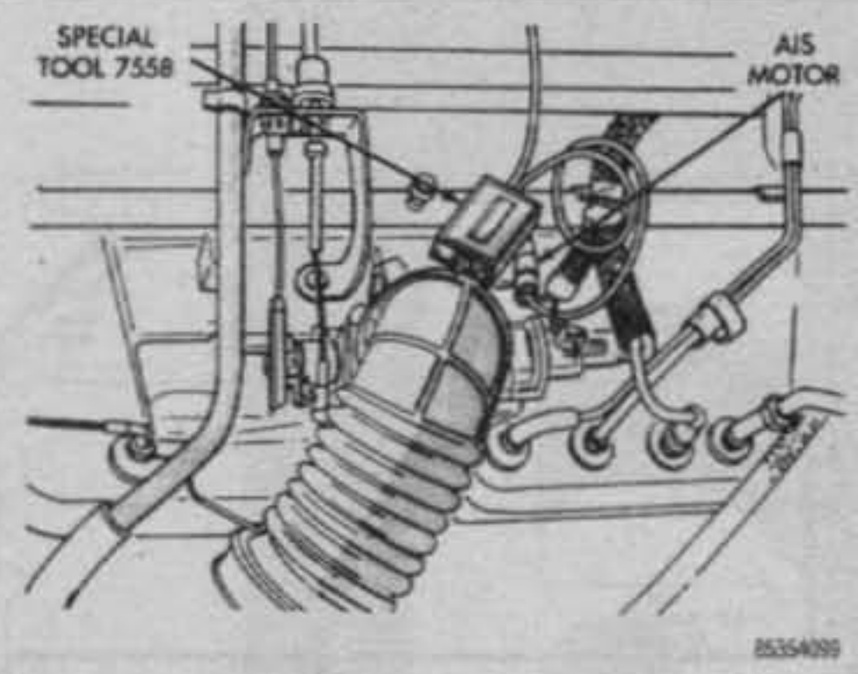

Fig. 111 AIS motor testing—1991–92

3. If there is still no voltage, check for voltage at the white with black tracer supply wire. If there is still no voltage at the supply wire, remove the engine controller and check for voltage at pin 7 and ground with the harness connected. If there is still no voltage present, perform a vehicle test using a DRB II Service Diagnostic Tester.

4. If voltage is present at the supply wire, replace the sync. sensor.

5. If voltage is present at pin 7 but not at the supply wire, check for continuity between the white/black wire at the distributor connector and pin 7 at the engine controller. If there is no continuity, repair the wire harness as necessary.

6. Check for continuity between the ground circuit wire at the distributor connector and ground. If there is no continuity, repair the wire harness as necessary.

7. Crank the engine while observing the voltmeter; the needle should fluctuate back and forth between 0 and 5 volts while the engine is cranking. This verifies that the stator in the distributor is operating properly. If there is no sync pulse, stator replacement is necessary.

Automatic Idle Speed (AIS) Motor Test (1991–92)

See Figure 111

The automatic idle speed motor can be tested using exerciser tool 7558.

1. With the ignition **OFF**, disengage the AIS motor wire connector at the throttle body. Plug the exerciser tool harness into the AIS motor. Connect the exerciser motor power leads to the battery. The red light on the exerciser should flash.

2. Start engine. When the switch is in the HIGH or LOW position, the light on the exerciser will flash indicating that voltage pulses are being sent to the stepper motor.

3. Move the switch to the HIGH position; the engine speed should increase. Move the switch to the LOW position; the engine speed should decrease.

   a. If engine speed changes while using the exerciser, the AIS motor is functioning properly. Disconnect the tool and reconnect the AIS harness.

   b. If the engine speed does not change, turn the ignition **OFF** and proceed to Step 4.

4. Remove the AIS motor from the throttle body.

➡When checking AIS motor operation with the motor removed, DO NOT allow the pintle to extend more than ¼ in. (6mm). If the pintle is extended more than ¼ in. (6mm), it may separate from the motor. The AIS motor must be replaced if the pintle separates from the motor.

5. With the ignition switch **OFF**, cycle the exerciser tool switch between the HIGH and LOW positions. Observe the pintle for movement.

   a. If the pintle does not move, replace the AIS motor. Start engine and test the replacement motor as described in Step 3.

   b. If the pintle operates properly, check the AIS motor bore in the throttle body for blockage and clean as necessary. Reinstall the AIS motor and retest.

VACUUM DIAGRAMS

Following is a listing of vacuum diagrams for most of the engine and emissions package combinations covered by this manual. Because vacuum circuits will vary based on various engine and vehicle options, always refer first to the vehicle emission control information label.

Should the label be missing, or should the vehicle be equipped with a different engine from the original equipment, refer to these diagrams for the same or similar configuration.

➡Replacement emission information labels can often be ordered from a dealer.

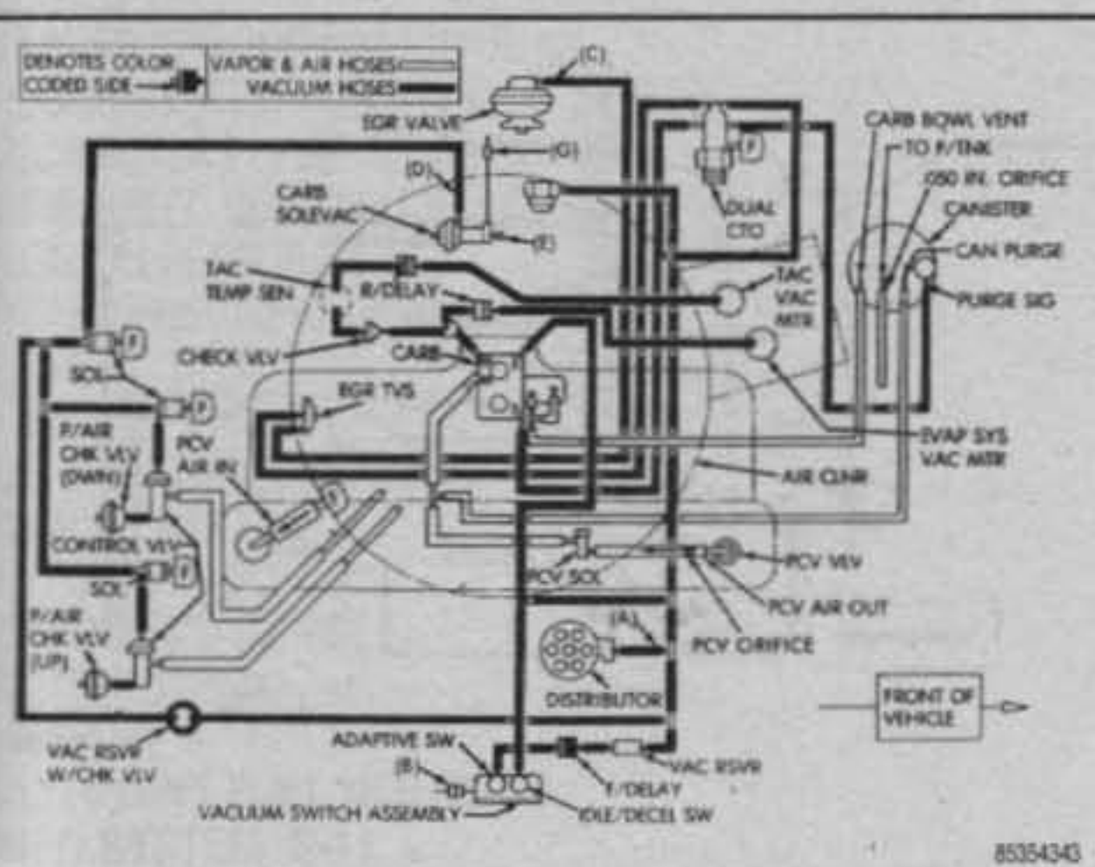

Fig. 112 Emission control vacuum schematic—1987–90 with 4.2L engine and automatic transmission

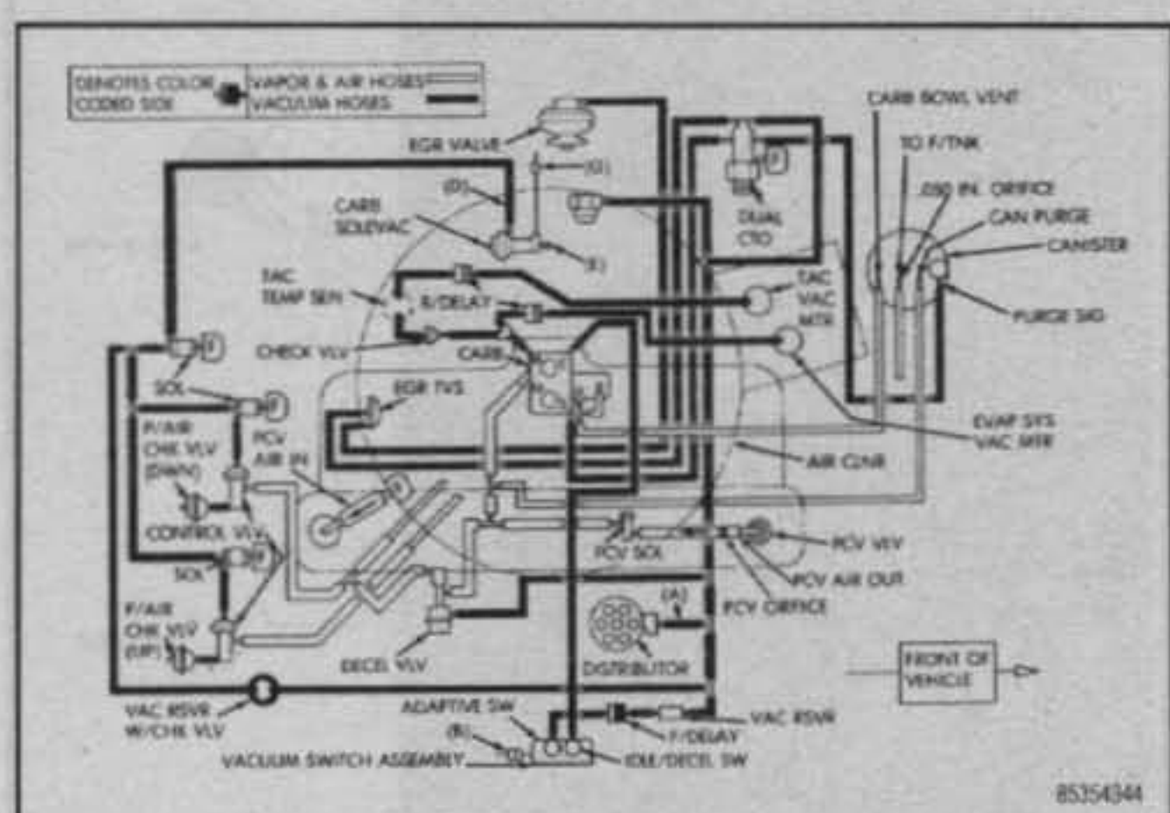

Fig. 113 Emission control vacuum schematic—1987–90 with 4.2L engine and manual transmission

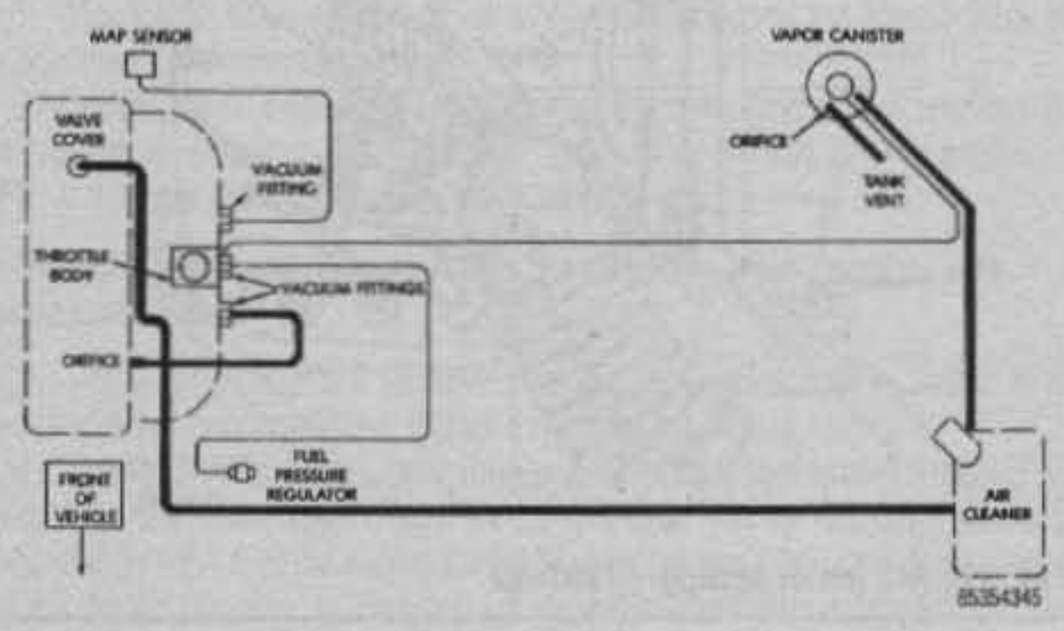

Fig. 114 Emission control vacuum schematic—1991 with 2.5L engine

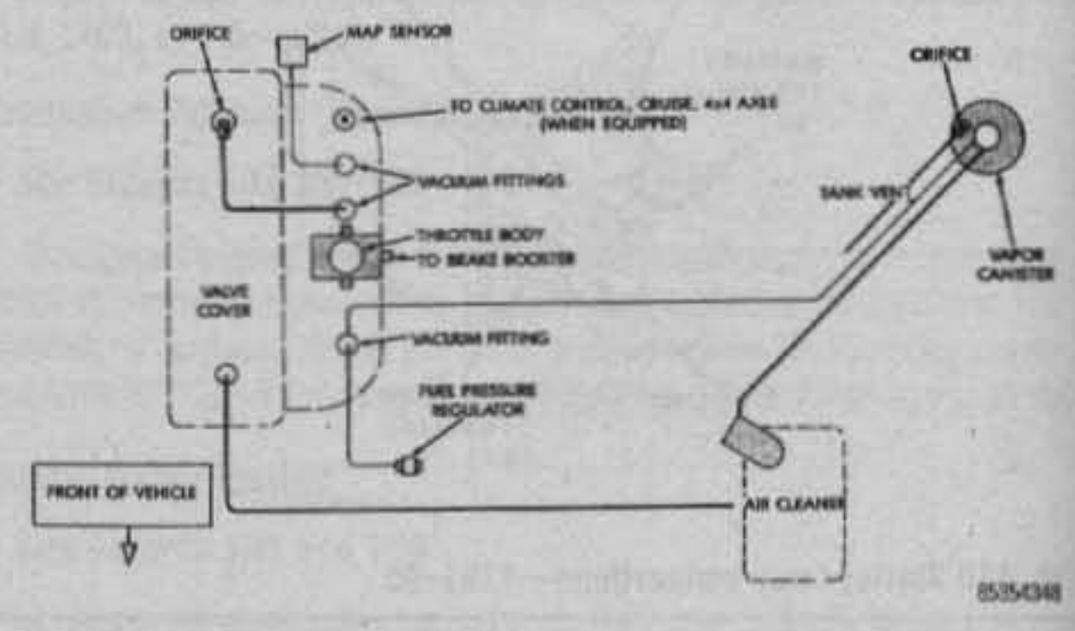

Fig. 117 Emission control vacuum schematic—1992 with 4.0L engine

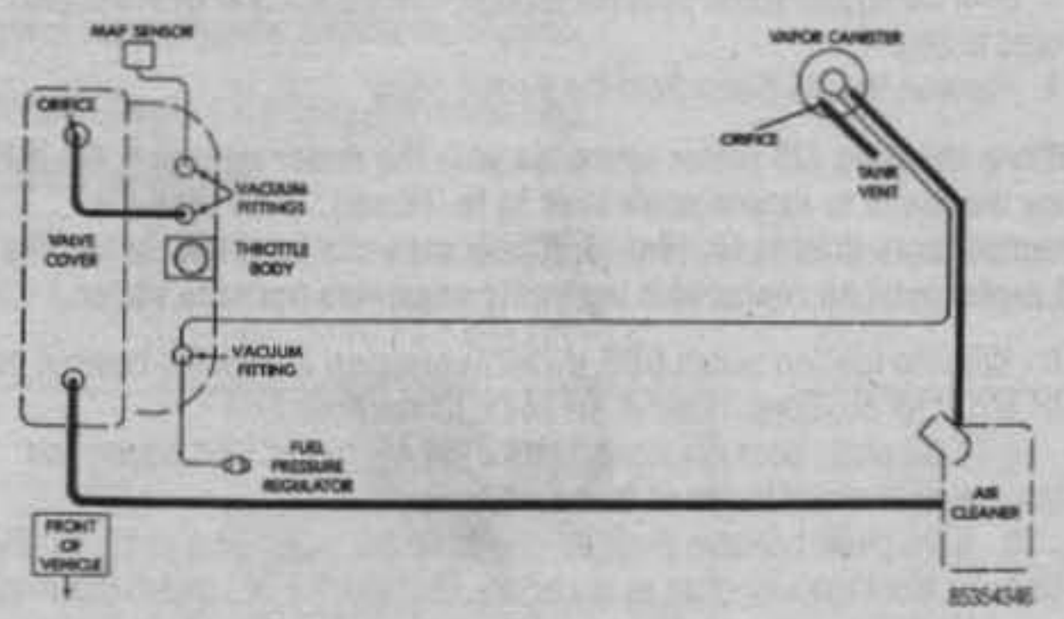

Fig. 115 Emission control vacuum schematic—1991 with 4.0L engine

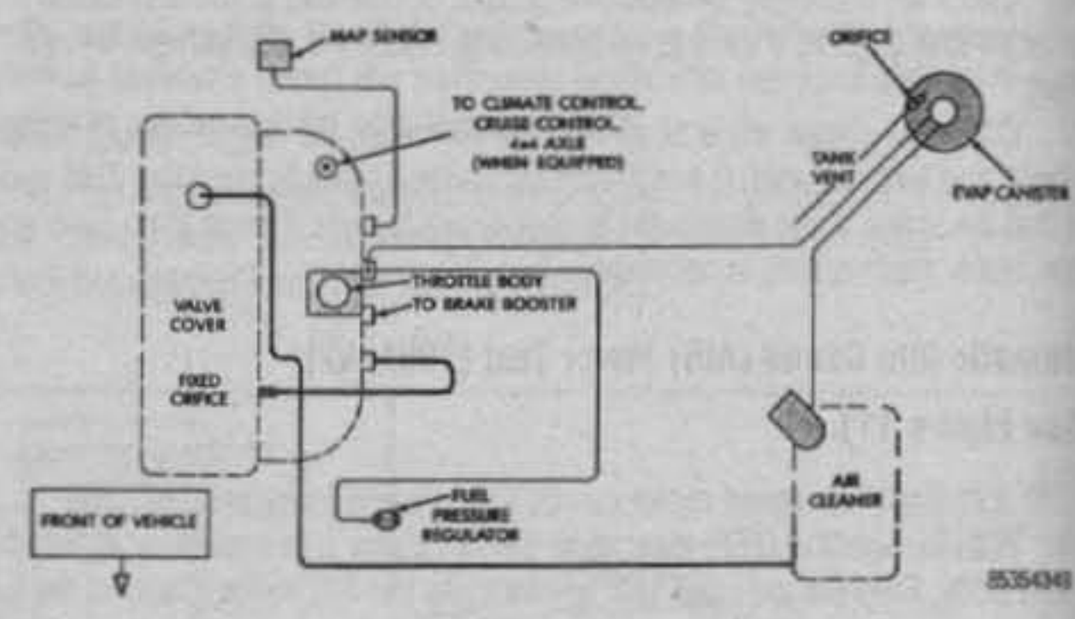

Fig. 118 Emission control vacuum schematic—1993–95 with 2.5L engine

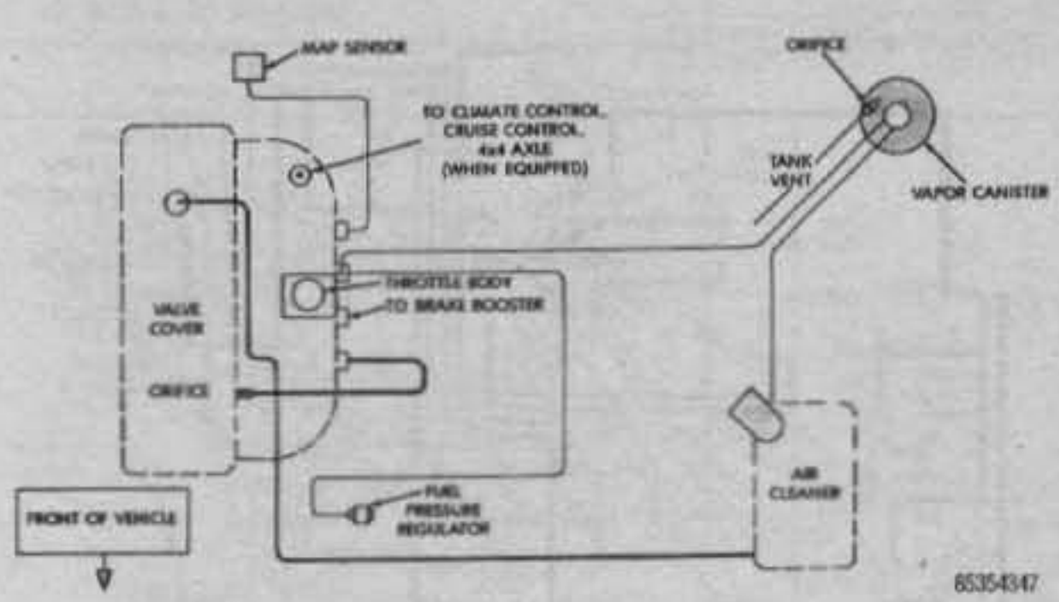

Fig. 116 Emission control vacuum schematic—1992 with 2.5L engine

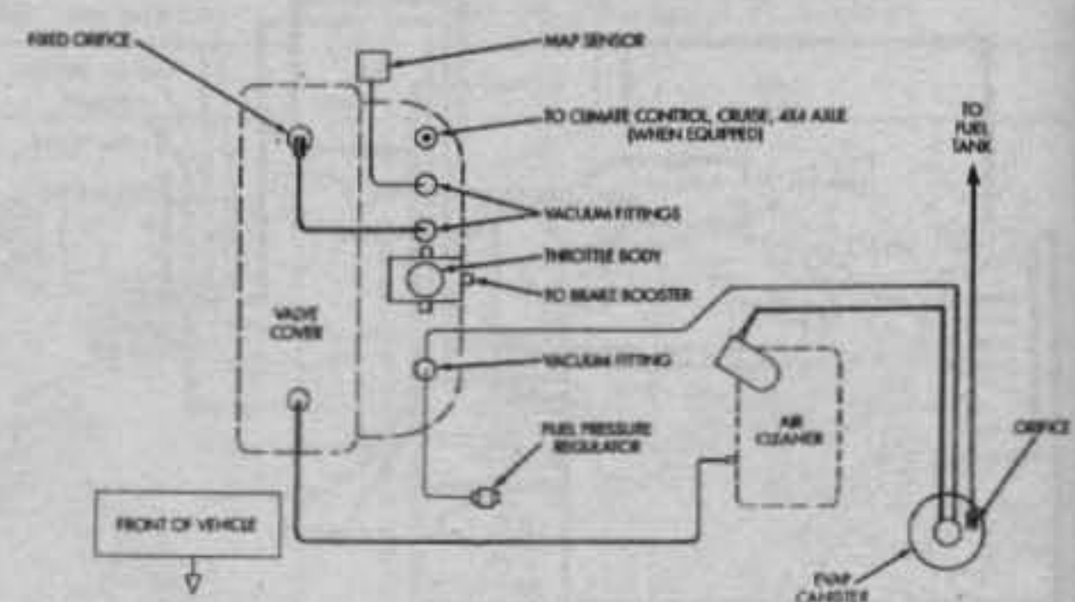

Fig. 119 Emission control vacuum schematic—1993–95 with 4.0L engine

CARBURETED FUEL SYSTEM 5-2
FUEL PUMP 5-2
REMOVAL & INSTALLATION 5-2
TESTING 5-2
CARBURETOR 5-2
REMOVAL & INSTALLATION 5-2
OVERHAUL 5-2
ADJUSTMENTS 5-4
THROTTLE BODY (SINGLE POINT) INJECTION FUEL SYSTEM 5-5
COMPONENTS AND OPERATION 5-5
FUEL PUMP 5-6
TESTING 5-6
REMOVAL & INSTALLATION 5-6
QUICK CONNECT FITTINGS 5-6
THROTTLE BODY 5-7
REMOVAL & INSTALLATION 5-7
FUEL BODY ASSEMBLY 5-7
REMOVAL & INSTALLATION 5-7
FUEL PRESSURE REGULATOR 5-8
REMOVAL & INSTALLATION 5-8
FUEL INJECTOR 5-8
REMOVAL & INSTALLATION 5-8
THROTTLE POSITION SENSOR (TPS) 5-8
ADJUSTMENT 5-8
REMOVAL & INSTALLATION 5-9
IDLE SPEED ACTUATOR MOTOR 5-9
REMOVAL & INSTALLATION 5-9
MANIFOLD ABSOLUTE PRESSURE (MAP) SENSOR 5-9
TESTING 5-9
REMOVAL & INSTALLATION 5-9
MANIFOLD AIR TEMPERATURE (MAT) SENSOR 5-10
TESTING 5-10
REMOVAL & INSTALLATION 5-10
COOLANT TEMPERATURE SENSOR (CTS) 5-10
TESTING 5-10
REMOVAL & INSTALLATION 5-10
ELECTRONIC CONTROL UNIT (ECU) 5-10
PRESSURE SENSING SWITCH 5-10
B+ LATCH SYSTEM POWER RELAY 5-10
EGR/CANISTER PURGE SOLENOID 5-11
ENGINE SPEED SENSOR (CRANKSHAFT POSITION SENSOR) 5-11
OXYGEN SENSOR HEATING ELEMENT 5-11
TESTING 5-11
WIDE-OPEN THROTTLE (WOT) SWITCH 5-11
TESTING 5-11
CLOSED THROTTLE (IDLE) SWITCH 5-11
TESTING 5-11
MULTI-POINT FUEL INJECTION (MFI) SYSTEM 5-11
RELEASING FUEL SYSTEM PRESSURE 5-12
QUICK CONNECT FITTINGS 5-12
THROTTLE BODY 5-12
REMOVAL & INSTALLATION 5-12
FUEL INJECTOR 5-13
REMOVAL AND INSTALLATION 5-13
MANIFOLD AIR TEMPERATURE (MAT) SENSOR 5-13
REMOVAL & INSTALLATION 5-13
COOLANT TEMPERATURE SENSOR (CTS) 5-13
REMOVAL & INSTALLATION 5-13
THROTTLE POSITION SENSOR 5-13
REMOVAL & INSTALLATION 5-13
VEHICLE DISTANCE (SPEED) SENSOR 5-13
REMOVAL & INSTALLATION 5-13
ENGINE CONTROLLER 5-14
REMOVAL & INSTALLATION 5-14
MANIFOLD ABSOLUTE PRESSURE (MAP) SENSOR 5-14
REMOVAL & INSTALLATION 5-14
FUEL TANK 5-14
TANK ASSEMBLY 5-14
REMOVAL & INSTALLATION 5-14

5

FUEL SYSTEM

CARBURETED FUEL SYSTEM 5-2
THROTTLE BODY (SINGLE POINT) INJECTION FUEL SYSTEM 5-5
MULTI-POINT FUEL INJECTION (MFI) SYSTEM 5-11
FUEL TANK 5-14

CARBURETED FUEL SYSTEM

Fuel Pump

REMOVAL & INSTALLATION

See Figure 1

1. Disconnect the inlet and outlet fuel lines, as well as any vacuum lines.
2. Remove the two fuel pump body attaching nuts and lockwashers.
3. Pull the pump and gasket (or O-ring) free of the engine. Make sure that the mating surfaces of the fuel pump and the engine are clean.

To install:

4. Cement a new gasket to the mounting flange of the fuel pump.
5. Position the fuel pump on the engine block so that the lever of the fuel pump rests on the fuel pump cam of the camshaft.
6. Secure the fuel pump to the block with the two cap screws and lock washers.
7. Connect the intake and outlet fuel lines to the fuel pump. Reattach the vacuum lines.

TESTING

See Figure 2

Volume Check

1. Disconnect the fuel line from the carburetor.
2. Place the open end in a suitable container.
3. Start the engine and operate it at normal idle speed. The pump should deliver at least one pint (16 oz.) in 30 seconds.

Pressure Check

1. Disconnect the fuel line at the carburetor.
2. Disconnect the fuel return line from the fuel filter, if so equipped, and plug the nipple on the filter.
3. Install a T-fitting on the open end of the fuel line and refit the line to the carburetor.
4. Plug a pressure gauge into the remaining opening of the T-fitting. The hose leading to the pressure gauge should not be any longer than 6 inches.
5. Start the engine and let it run at idle speed. Bleed any air out of the hose between the gauge and the T-fitting. On pumps with a fuel return line, the line must be plugged. Fuel pressure should be 3.00–5.00 psi (21–34 kPa) at idle.

Carburetor

REMOVAL & INSTALLATION

See Figure 3

1. Remove the air cleaner.
2. Disconnect the fuel and vacuum lines. It might be a good idea to tag them to avoid confusion upon assembly.
3. Disconnect the choke rod.
4. Disconnect the accelerator linkage.
5. Disconnect the automatic transmission linkage.
6. Unbolt and remove the carburetor.
7. Remove the base gasket.

To install:

8. Before installation, make sure that the carburetor and manifold sealing surfaces are clean.
9. Install a new carburetor base gasket.
10. Install the carburetor, then position the fuel and vacuum lines.
11. Bolt down the carburetor evenly, tightening the bolts in a crisscross pattern to 7 ft. lbs. (9 Nm), then to 14 ft. lbs. (19 Nm).
12. Secure the fuel and vacuum lines.
13. Connect the accelerator and automatic transmission linkage. If the transmission linkage was disturbed, it will have to be adjusted.
14. Connect the choke rod.
15. Install the air cleaner. Adjust the idle speed and mixture.

OVERHAUL

Efficient carburetion depends greatly on careful cleaning and inspection during overhaul, since dirt, gum, water, or varnish in or on the carburetor parts is often responsible for poor performance.

Overhaul your carburetor in a clean, dust-free area. Carefully disassemble the carburetor, referring often to the exploded views. Keep all similar and look-alike parts segregated during disassembly and cleaning to avoid accidental interchange during assembly. Make a note of all jet sizes.

When the carburetor is disassembled, wash all parts (except diaphragms, electric choke units, pump plunger, and any other plastic, leather, fiber or rubber parts) in clean carburetor solvent. Do not leave parts in the solvent any longer than is necessary to sufficiently loosen the deposits. Excessive cleaning may remove the special finish from the float bowl and choke valve bodies, leaving these parts unfit for service. Rinse all parts in clean solvent and blow them dry with compressed air or allow them to air dry. Wipe clean all cork, plastic, leather and fiber parts with a clean, lint-free cloth.

Blow out all passages and jets with compressed air and be sure that there are no restrictions or blockages. Never use wire or similar tools to clean jets, fuel passages, or air bleeds. Clean all jets and valves separately to avoid accidental interchange.

Check all parts for wear or damage. If wear or damage is found, replace the defective parts. Especially check the following:

1. Check the float needle and seat for wear. If wear is found, replace the complete assembly.
2. Check the float hinge pin for wear and the float(s) for dents or distortion. Replace the float if fuel has leaked into it.
3. Check the throttle and choke shaft bores for wear or an out-of-round condition. Damage or wear to the throttle arm, shaft, or shaft bore will often require replacement of the throttle body. These parts require a close tolerance of fit. Wear may allow air leakage, which could affect starting and idling.

➡Throttle shafts and bushings are not included in overhaul kits. They can be purchased separately.

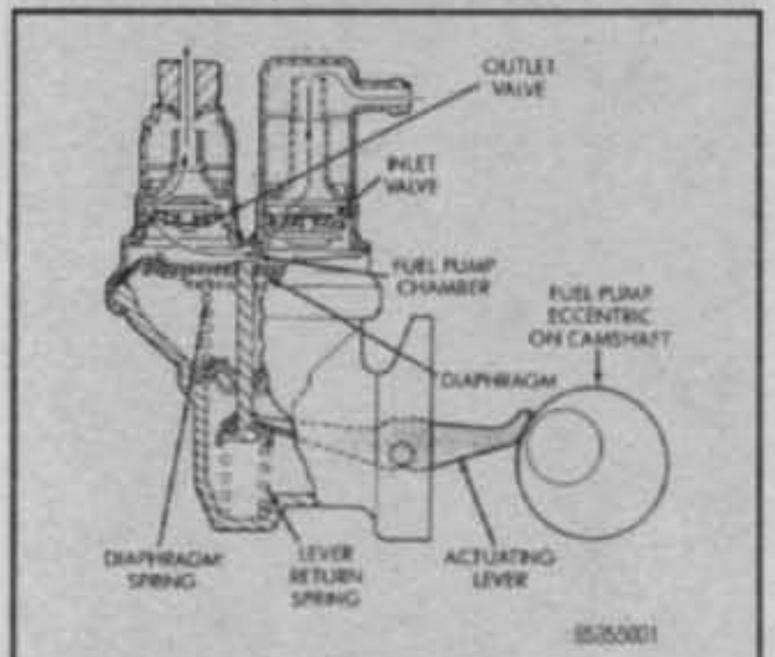

Fig. 1 Common mechanical fuel pump

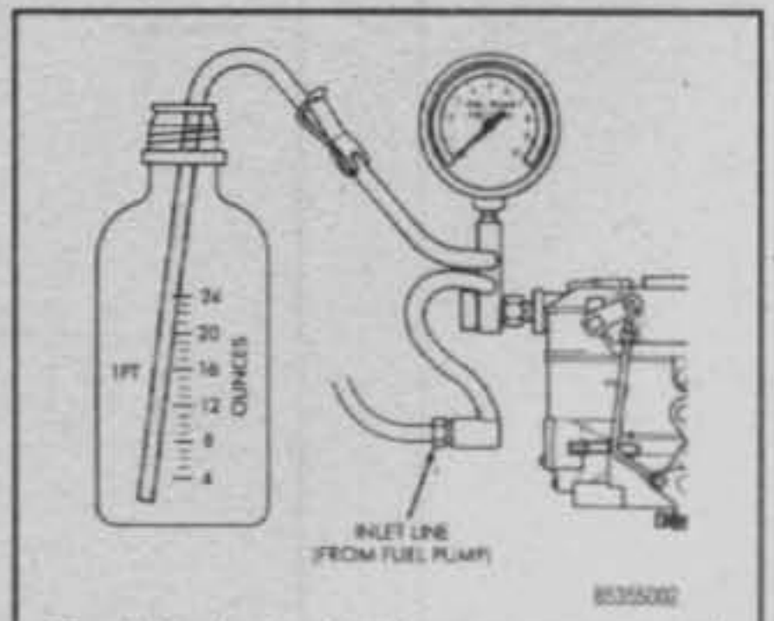

Fig. 2 Mechanical fuel pump pressure and capacity tests

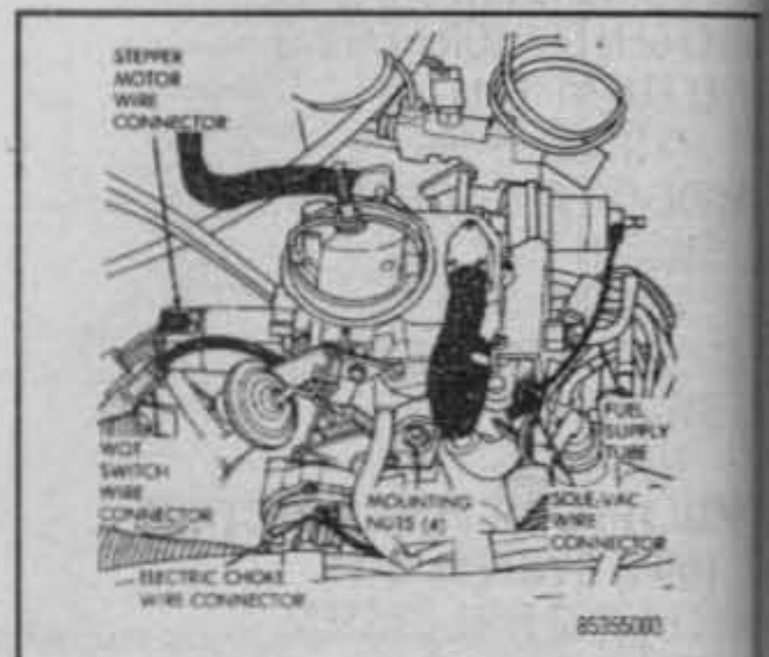

Fig. 3 Carburetor removal/installation

4. Inspect the idle mixture adjusting needles for burrs or grooves. Any such condition requires replacement of the needle, since you will not be able to obtain a satisfactory idle.

5. Test the accelerator pump check valves. They should pass air one.way but not the other. Test for proper seating by blowing and sucking on the valve. Replace the valve if necessary. If the valve is satisfactory, wash the valve again to remove breath moisture.

6. Check the bowl cover for warped surfaces with a straightedge.

7. Closely inspect the valves and seats for wear and damage, replacing as necessary.

8. After the carburetor is assembled, check the choke valve for freedom of operation.

Carburetor overhaul kits are recommended for each overhaul. These kits contain all gaskets and new parts to replace those that deteriorate most rapidly. Failure to replace all parts supplied with the kit (especially gaskets) can result in poor performance later.

Carburetor manufacturers supply overhaul kits of three basic types: minor repair, major repair, and gasket kits. Basically, they contain the following:

Minor Repair Kits

- All gaskets
- Float needle valve
- Volume control screw
- All diaphragms
- Spring for the pump diaphragm

Major Repair Kits

- All jets and gaskets
- All diaphragms
- Float needle valve
- Volume control screw
- Pump ball valve
- Main jet carrier
- Float
- Complete intermediate rod
- Intermediate pump lever
- Complete injector tube
- Some cover hold-down screws and washers

Gasket Kits

- All gaskets

After cleaning and checking all components, reassemble the carburetor, using new parts and referring to the exploded view. When reassembling, make sure that all screws and jets are tight in their seats, but do not overtighten, as the tips will be distorted. Tighten all screws gradually, in rotation. Do not tighten needle valves into their seats; uneven jetting will result. Always use new gaskets. Be sure to adjust the float level when reassembling.

Carter Model BBD

▸ See Figure 4

1. Place the carburetor on a repair stand to protect throttle valves from damage and to provide a stable base for working.

2. Unfasten the retaining clip from the accelerator pump arm link and disconnect the line. Remove the stepper motor.

3. Remove the step-up piston cover plate and gasket from atop the air horn.

4. Remove the screws and locks from the accelerator pump arm and the vacuum piston rod lifter. Then, slide the pump lever out to the air horn. The vacuum piston and step-up rods can now be lifted straight up and out of the air horn as an assembly.

5. Remove the vacuum hose from between the carburetor main body and the choke vacuum diaphragm at the main body tap.

6. Remove the choke diaphragm, linkage and bracket assembly and place to one side to be cleaned as a separate item.

7. Remove the retaining clip from the fast idle cam link and remove the link from the choke shaft lever.

8. Remove the fast idle cam retaining screw and remove the fast idle cam and linkage.

9. Remove the air horn retaining screws and lift the air horn straight up and away from the main body. Discard the gasket.

10. Invert the air horn and compress the accelerator pump drive spring and remove the "S" link from the pump shaft. The pump assembly can now be removed.

11. Remove the fuel inlet needle valve, seat and gasket from the main body.

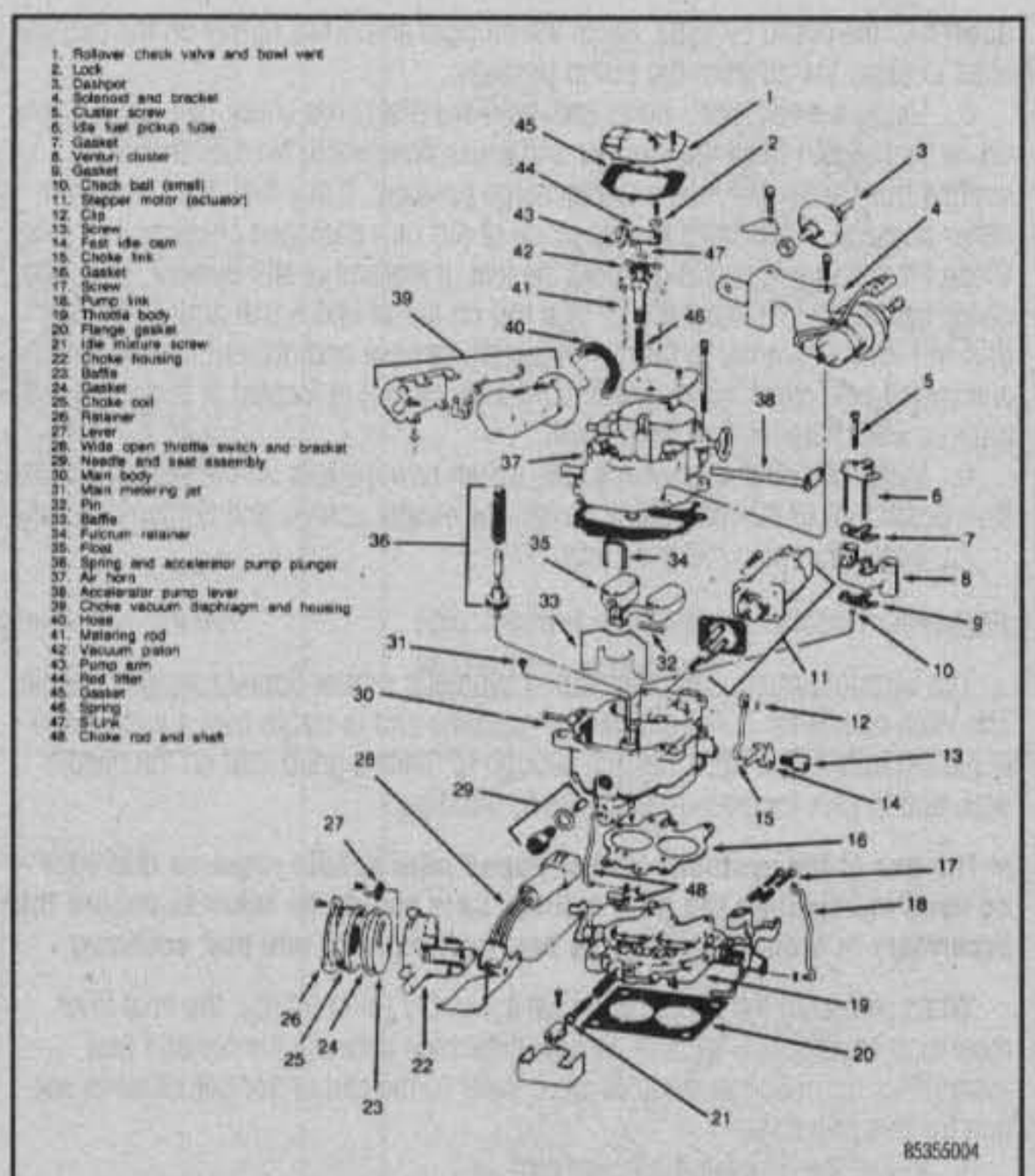

Fig. 4 Exploded view of the Model BBD carburetor

12. Lift out the float fulcrum pin retainer and baffle. Then lift out the floats and fulcrum pin.

13. Remove the main metering jets.

14. Remove the venturi cluster screws, then lift the venturi cluster and gaskets up and away from the main body. Discard the gaskets. Do not remove the idle orifice tubes or the main vent tubes from the cluster. They can be cleaned in a solvent and dried with compressed air.

15. Invert the carburetor and drop out the accelerator pump discharge and intake check balls.

16. Remove the idle mixture screws from the throttle body, after lightly bottoming and noting the number of turns. Record the turns in for reference when installing the mixture screws.

17. Remove the screws that attach the throttle body to the main body. Separate the bodies.

18. Test the freeness of the choke mechanism in the air horn. The choke shaft must float free to operate correctly. If choke shaft sticks, or appears to be gummed from deposits in the air horn, a thorough cleaning will be required.

19. The carburetor now has been disassembled into three main units: the air horn, main body, and throttle body. Components are disassembled as far as necessary for cleaning and inspection.

THROTTLE BODY

Check the throttle shaft for excessive wear in the throttle body. If wear is extreme, it is recommended that the throttle body assembly be replaced rather than installing a new shaft in the old body. Install the idle mixture screws in the body. The tapered portion must be straight and smooth. If the tapered portion is grooved or ridged, a new idle mixture screw should be installed to insure having correct idle mixture control.

MAIN BODY

1. Invert the main body and place insulator in position, then place the throttle body on the main body and align. Install the screws and tighten securely.

2. Install the accelerator pump discharge the check ball (5/32 inch diameter) in the discharge passage. Drop the accelerator pump intake check ball (3/16 inch diameter) into the bottom of the pump cylinder.

3. To check the accelerator pump system, fuel inlet and discharge the check balls, and proceed as follows:

4. Pour clean gasoline into the carburetor bowl, approximately ½ inch deep. Remove the pump plunger from the container of mineral spirits and slide

down into the pump cylinder. Raise the plunger and press lightly on the plunger shaft to expel the air from the pump passage.

5. Using a small clean brass rod, hold the discharge check ball down firmly on its seat. Again raise the plunger and press downward. No fuel should be emitted from either the intake or discharge passage. If any fuel does emit from either passage, it indicates the presence of dirt or a damaged check ball or seat. Clean the passage again and repeat the test. If leakage is still evident, stake the check ball seats (place a piece of drill rod on top of check ball and lightly tap drill rod with a hammer to form a new seat), remove and discard the old balls, and install new check balls. The fuel inlet check ball is located at bottom of the plunger well. Remove fuel from bowl.

6. Install the discharge check ball. Install new gaskets on the venturi cluster, then position it in the main body. Install the cluster screws and tighten securely.

7. Install the main metering jets.

FLOAT

The carburetors are equipped with a synthetic rubber tipped fuel inlet needle. The viton needle tip is not affected by gasoline and is stable over a wide range of temperatures. The tip is flexible enough to make a good seal on the needle seat, and to give increased resistance to flooding.

➡The use of the synthetic rubber tipped inlet needle requires that care be used in adjusting the float setting. Care should be taken to ensure this accurately in order to secure the best performance and fuel economy.

When replacing the needle and seat assembly (inlet fitting), the float level must also be checked, as dimensional difference between the old and new assemblies may change the float level. Refer to the carburetor adjustments section for this procedure.

1. Install the floats and fulcrum pin.
2. Install the fulcrum pin retainer and baffle.
3. Install the fuel inlet needle valve, seat and gasket in the main body.

AIR HORN

1. Place the accelerator pump drive spring on the pump plunger shaft then insert the shaft into air horn. Compress the spring far enough to insert the "S" link.

2. Install the pump lever, vacuum piston rod lifter and accelerator pump arm in the air horn.

3. Drop the intake check ball into the pump bore. Install the baffle into the main body. Place the step-up piston spring in the piston vacuum bore. Position a new gasket on the main body and install the air horn.

4. Install the air horn retaining screws and tighten alternately, a little at a time, to compress the gasket securely.

5. To qualify the step-up piston, adjust the gap by turning the Allen head calibration screws on top of the piston. See the adjustment portion of this section for proper measurement. Record the number of turns and direction to obtain this dimension for this must be reset to its original position after the the vacuum step-up piston adjustment has been made.

6. Carefully position the vacuum piston metering rod assembly into the bore in air horn making sure metering rods are in the main metering jets. Then place the two lifting tangs of the plastic rod lifter under the piston yoke. Slide the shaft of the accelerator pump lever through the rod lifter and pump arm. Install the two locks and adjusting screws, but do not tighten until after the adjustment is made.

7. Install the fast idle cam and linkage. Tighten the retaining screw securely.

8. Connect the accelerator pump linkage to the pump lever and throttle lever. Install the retaining clip.

CHOKE VACUUM DIAPHRAGM

Inspect the diaphragm vacuum fitting to insure that the passage is not plugged with foreign material. Leak check the diaphragm to determine if it has internal leaks. To do this, first depress the diaphragm stem, then place a finger over the vacuum fitting to seal the opening. Release the diaphragm stem. If the stem moves more than 1/16 inch (2mm) in 10 seconds, the leakage is excessive and the assembly must be replaced.

Install the diaphragm assembly on the air horn as follows:

1. Engage the choke link in the slot in the choke lever.
2. Install the diaphragm assembly, secure with the attaching screws.
3. Inspect the rubber hose for cracks before placing it on the correct carburetor fitting. Do not connect the vacuum hose to the diaphragm fitting until after the vacuum kick adjustment has been made.

4. Loosen the choke valve attaching screws slightly. Hold the valve closed, with fingers pressing on high side of the valve. Tap the valve lightly with a screwdriver to seat in the air horn. Tighten the attaching screws securely and stake by squeezing with pliers.

CHOKE VACUUM KICK

The choke diaphragm adjustment controls the fuel delivery while the engine is running. It positions the choke valve within the air horn by action of the linkage between the choke shaft and the diaphragm. The diaphragm must be energized to measure the vacuum kick adjustment. Vacuum can be supplied by an auxiliary vacuum source.

ADJUSTMENTS

Float and Fuel Level

◆ See Figure 5

1. Remove the air horn.

2. Apply light finger pressure to the vertical float tab to exert GENTLE pressure against the inlet needle.

3. Lay a straight edge across the float bowl and measure the gap between the straight edge and the top of the float at its highest point. The gap should be 1/4 in. (6mm).

4. To adjust, remove the float and bend the lower tab. Replace the float and check the gap.

Fast Idle Linkage

◆ See Figure 6

➡This adjustment is performed with the air cleaner removed.

1. Loosen the choke housing cover and rotate it 1/4 turn to the right. Tighten one screw.

2. Slightly open the throttle and place the fast idle screw on the second cam step.

3. Measure the distance between the choke plate and the air horn wall. The distance should be 0.095 in. (2.4mm).

4. If adjustment is necessary, bend the fast idle cam link down to increase or up to decrease the gap.

5. Return the choke cover cap to the original setting.

Initial Choke Valve Clearance

◆ See Figure 7

1. Position the fast idle screw on the top step of the fast idle cam.

2. Using a vacuum pump, seat the choke vacuum break.

3. Apply light closing pressure on the choke plate to position the plate as far closed as possible without forcing it.

4. Measure the distance between the air horn wall and the choke plate. If it is not 9/64 in. (3.6mm), bend the choke vacuum break to adjust the clearance.

Choke Setting

The automatic choke setting is made by loosening the choke cover in the desired direction as indicated by an arrow on the face of the cover. the original setting will be satisfactory for most driving conditions. However, if the engine stumbles or stalls on acceleration during warm-up, the choke may be set richer or leaner no more than two graduations from the original setting.

Choke Unloader

◆ See Figure 8

With the throttle held fully open, apply pressure on the choke valve toward the closed position and measure the clearance between the lower edge of the choke valve and the air horn wall. The measurement should be 9/32 in. (7mm). Adjust by bending the tang on the throttle lever which contacts the fast idle cam. Bend toward the cam to increase the clearance.

➡Do not bend the unloader down from a horizontal plane. After making the adjustment, make sure the unloader tang does not contact the main body flange when the throttle is fully open. A clearance of 0.070 in. (1.8mm) must be present. Final unloader adjustment must always be done

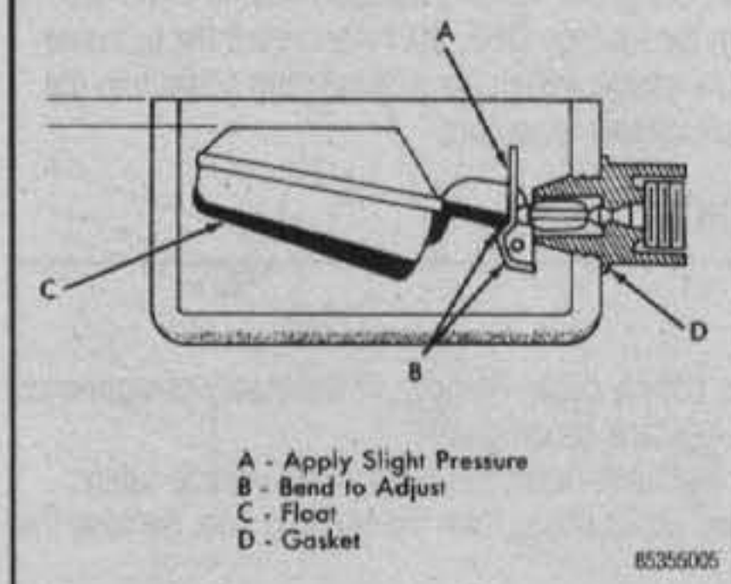

Fig. 5 Float adjustment—Model BBD carburetor

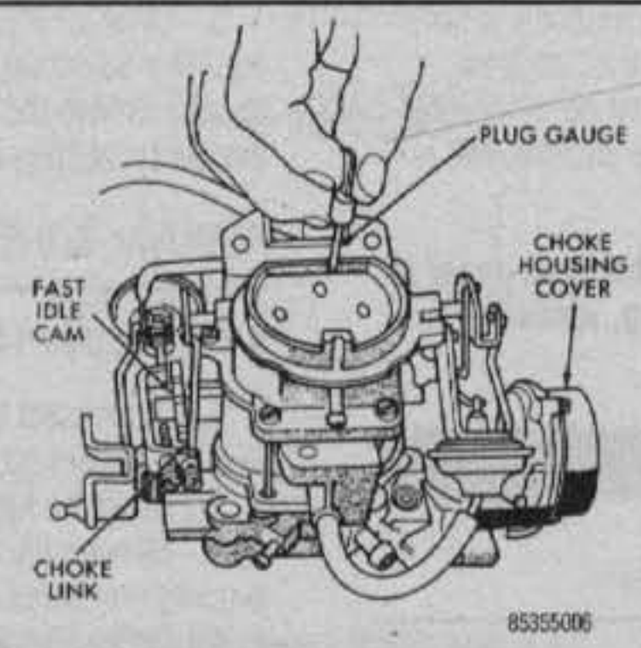

Fig. 6 Fast idle cam adjustment—Model BBD carburetor

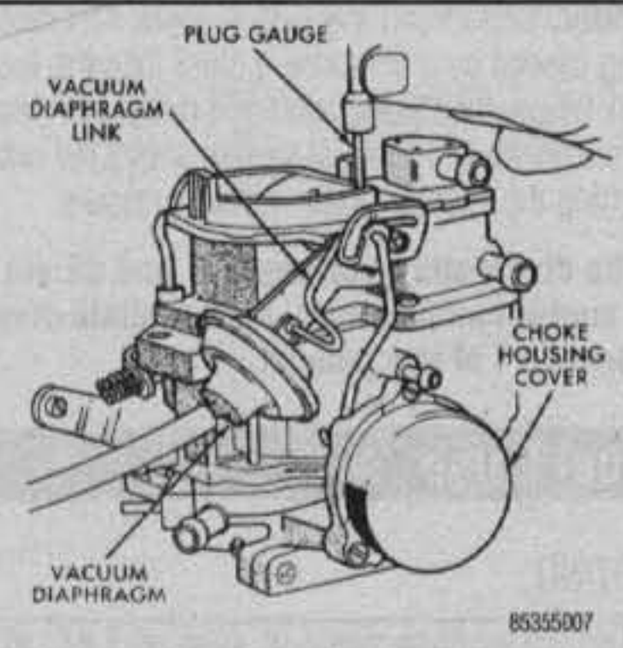

Fig. 7 Initial choke valve adjustment—Model BBD carburetor

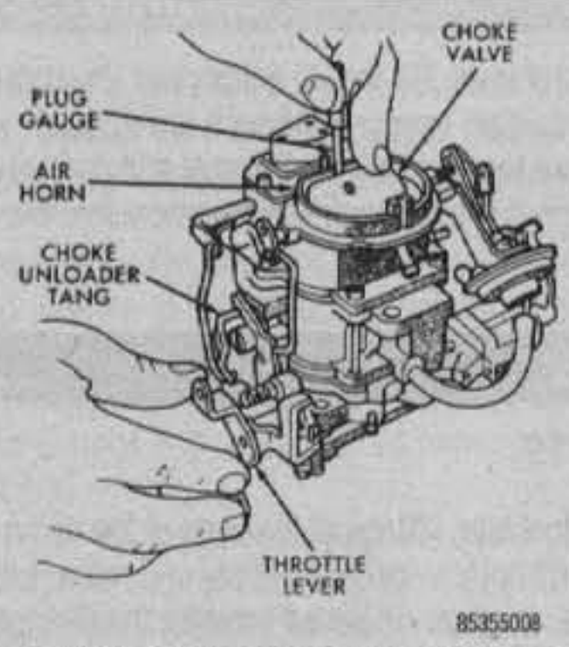

Fig. 8 Choke unloader adjustment—Model BBD carburetor

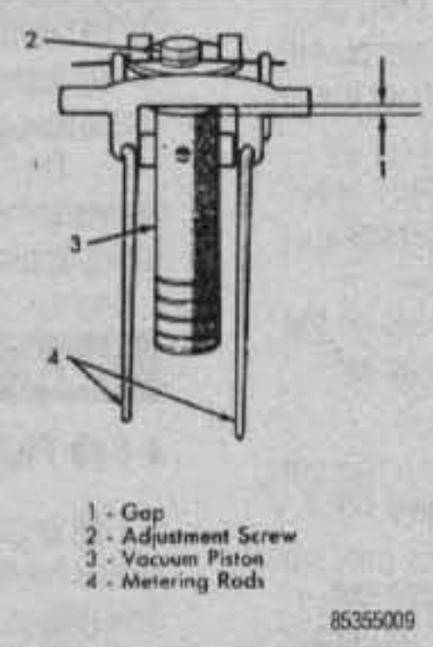

Fig. 9 Vacuum piston gap adjustment—Model BBD carburetor

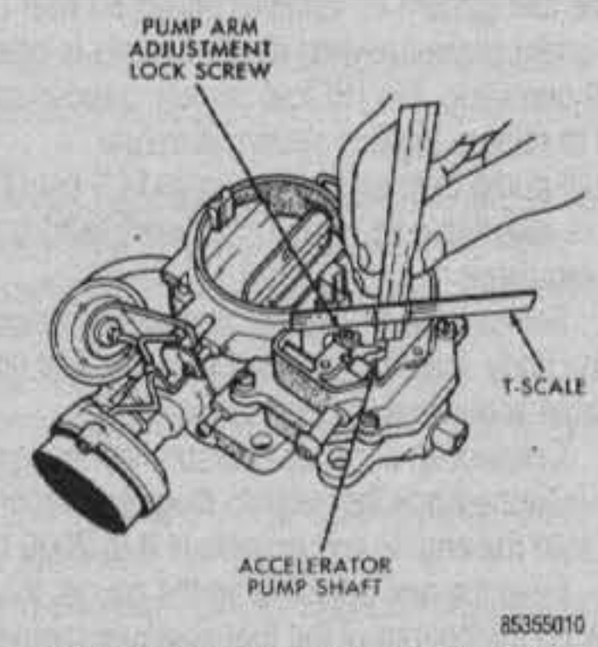

Fig. 10 Accelerator pump adjustment—Model BBD carburetor

on the vehicle. The throttle should be fully opened by depressing the accelerator pedal to the floor. This is to assure that full throttle is obtained.

Vacuum (Step-up) Piston Gap

See Figure 9

1. Turn the adjusting screw (mounted on top of the unit), so that the gap between the metering rod lifter's lower edge and the top of the vacuum piston is 1/32 in. (0.03mm).
2. Counting the number of turns involved, turn the curb idle adjustment screw counterclockwise, until the throttle valves are completely closed.
3. Fully depress the vacuum piston, while exerting moderate pressure on the metering rod lifter tab. In this position, tighten the rod lifter lock screw.
4. Release the piston and rod lifter.

➡The accelerator pump should now be adjusted.

5. Return the curb idle adjustment screw to its original position.

Accelerator Pump

See Figure 10

1. Counting the number of turns involved, turn the curb idle adjustment screw counterclockwise, until the throttle valves are completely closed.
2. Open the choke valve so that the fast idle cam will allow the throttle valves to seat in their bores.
3. Turn the curb idle adjustment screw clockwise, so that it just barely touches the stop, then turn it 2 additional full turns.
4. Measure the distance between the surface of the air horn and the top of the accelerator pump shaft with a T-scale. The distance should be 33/64 in. (13mm).
5. If the dimension is not correct, loosen the pump arm adjusting screw and rotate the sleeve to adjust the pump travel. Tighten the lock screw.
6. Return the curb idle screw to its original position.

THROTTLE BODY (SINGLE POINT) INJECTION FUEL SYSTEM

Components and Operation

See Figure 11

The throttle body fuel injection is used on 1987–90 Wranglers equipped with the 2.5L engine and is a "pulse time" system that uses a single solenoid-type injector to meter fuel into the throttle body above the throttle plate. Fuel is metered to the engine by an Electronic Control Unit (ECU), which controls the amount of fuel delivery according to input from various engine sensors that monitor exhaust gas oxygen content, coolant temperature, manifold absolute pressure, crankshaft position and throttle position. These sensors provide an electronic signal by varying resistance within the sensor itself. By reading the difference in resistance, the ECU can determine engine operating conditions and calculate the correct air/fuel mixture, as well as ignition timing under varying engine loads and temperatures. In addition, the ECU controls fuel pump operation, idle speed, emissions, the upshift indicator lamp and the A/C compressor clutch.

TBI fuel injection has two main subsystems; a fuel subsystem and a control subsystem. The fuel subsystem consists of an electric fuel pump (mounted in the fuel tank), a fuel filter, a pressure regulator and the fuel injector. The control subsystem consists of a Manifold Air/fuel Temperature (MAT) sensor, a Coolant Temperature Sensor (CTS), a Manifold Absolute Pressure (MAP) sensor, a knock sensor, an exhaust gas oxygen (O_2) sensor, an Electronic Control Unit (ECU), a gear position indicator (automatic transmission only), a Throttle Position Sensor (TPS) and power steering pressure switch with a load swap relay. In addition to these sensors which send signals to the ECU, there are various devices which receive signals from the ECU to control different functions such as exhaust gas recirculation, idle speed control, air conditioner operation, etc.

Before performing any system tests, first determine that the problem is not being caused by a component other than the fuel injection system, such as spark plugs, distributor, ignition timing, etc. Also make sure that no air is entering the intake and exhaust system above the catalytic converter and that fuel is reaching the injector under normal pressure.

➡The diagnostic connectors D1 and D2 are located on the dash panel in the engine compartment. For complete diagnostic testing, please refer to Section 4 of this manual.

Fuel Pump

TESTING

Pressure Test

See Figures 12 and 13

The fuel system on vehicles equipped with Throttle Body Injection (TBI) is only under pressure when the fuel pump is operating. As long as the fuel pump is not operating, the TBI fuel system components can be removed without the need to release the fuel system pressure.

Fuel pump operating pressure is 14.5 psi (100 kPa). The fuel pressure regulator is adjustable by means of a Torx® head screw on the bottom of the pressure regulator.

1. Remove the air cleaner assembly. Remove the screw test port plug on the throttle body, then install a fuel pressure test fitting. Pressure test fittings are available at many auto parts stores.
2. Connect an accurate pressure test gauge to the test fitting.
3. Connect a tachometer to diagnostic connector terminals D1-1 and D1-3, then start the engine and accelerate it to 2000 rpm.
4. Read the fuel pressure on the gauge. If necessary, turn the adjustment screw on the bottom of the fuel pressure regulator to obtain 14.5 psi (100 kPa) of fuel pressure. Turning the screw inward increases the pressure and turning the screw outward decreases the pressure.
5. Once all adjustments are complete, install a lead seal ball to cover the regulator adjusting screw. Turn the ignition **OFF**, then disconnect the tachometer and remove the fuel pressure gauge. Install the original plug screw into the throttle body, then install the air cleaner assembly.

REMOVAL & INSTALLATION

See Figures 14 and 15

1. Disconnect the negative battery cable. Remove all necessary component in order to gain access to the fuel tank sending unit.
2. Drain the fuel from the fuel tank. Raise and support the vehicle safely.
3. Remove the fuel inlet and outlet hoses from the sending unit. Remove th sending unit wires.
4. On the 15 gallon tank, unplug the sending unit retaining lock ring by tapping counterclockwise with a brass punch and hammer. Remove the sending unit, which incorporates the electric fuel pump, along with the O-ring seal from the fuel tank.
5. On the 20 gallon tank, remove the mounting bolts and lift the assembly out of the tank. Discard the gasket.

To install:

6. Installation is the reverse of removal. On the 20 gallon tank, be sure to use a new gasket and tighten the retaining screws to 18 inch lbs. (2 Nm).
7. On the 15 gallon tank, be sure to use a new O-ring seal and carefully ta the retaining lock ring clockwise with a brass punch and hammer, until the rin locks against the stops on the tank.

Quick Connect Fittings

See Figures 16, 17, 18 and 19

TBI engines use quick connect fuel tube fittings at the ends of the nylon re forced hoses that connect the throttle body to the fuel supply and return tubes The fittings consists of two O-rings, a spacer (installed between the O-rings), and an O-ring retainer.

Quick connect fittings are located along the frame rail under the vehicle.

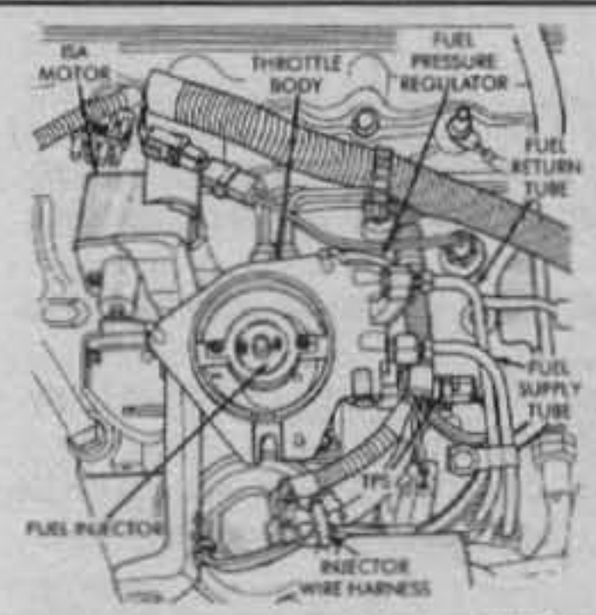

Fig. 11 Throttle body assembly—1987–90 with 2.5L engine

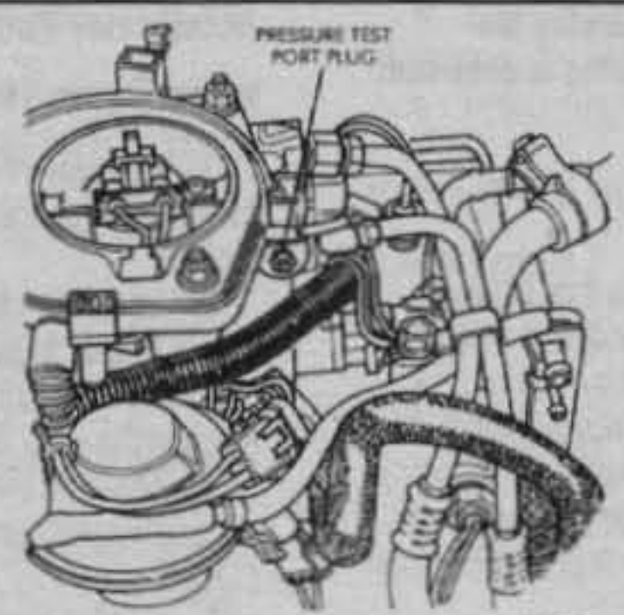

Fig. 12 TBI pressure test port plug—1987–90 with 2.5L engine

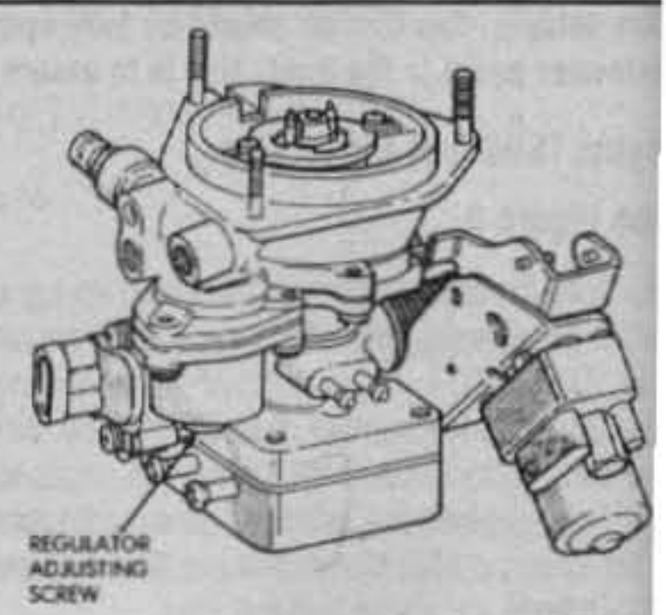

Fig. 13 TBI pressure adjustment—1987–90 with 2.5L engine

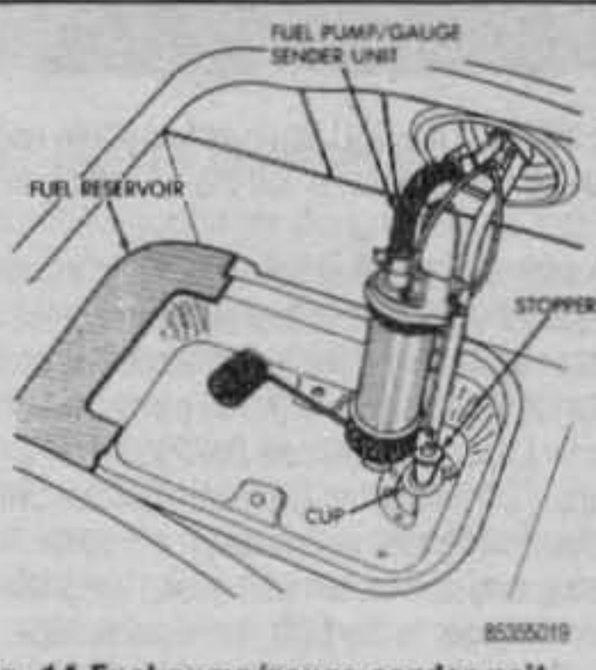

Fig. 14 Fuel pump/gauge sender unit installation

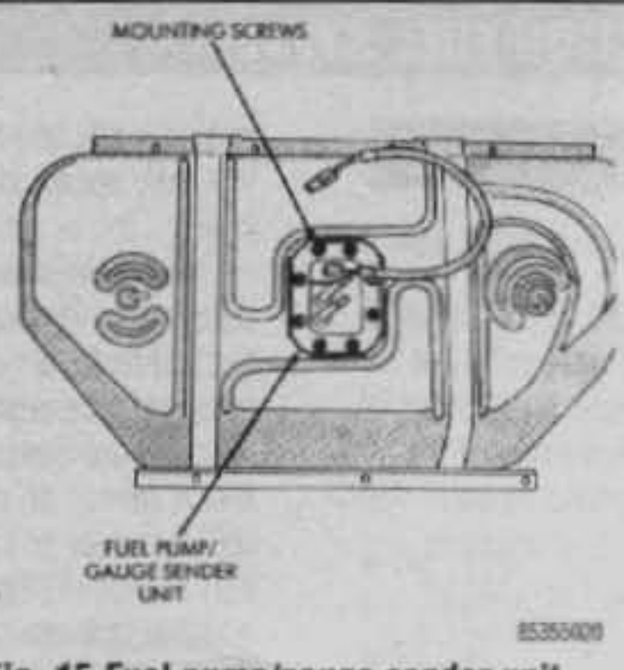

Fig. 15 Fuel pump/gauge sender unit installation—with 20 gallon tank

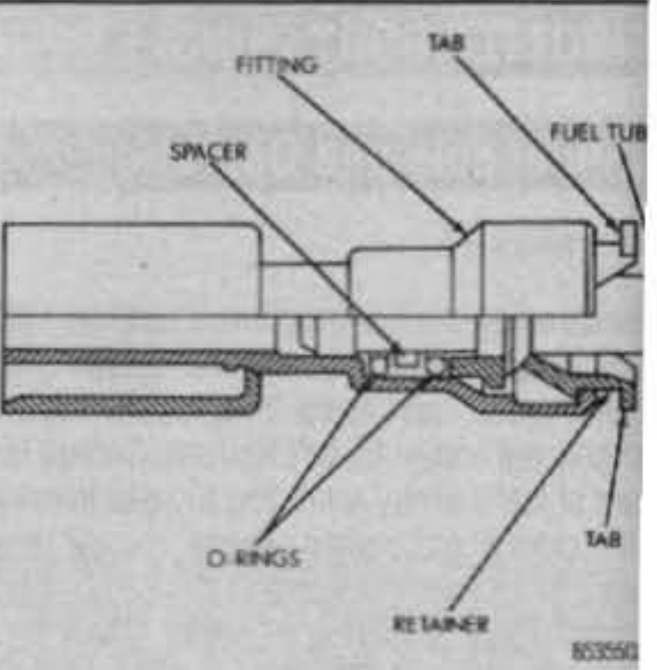

Fig. 16 Quick-connect fitting

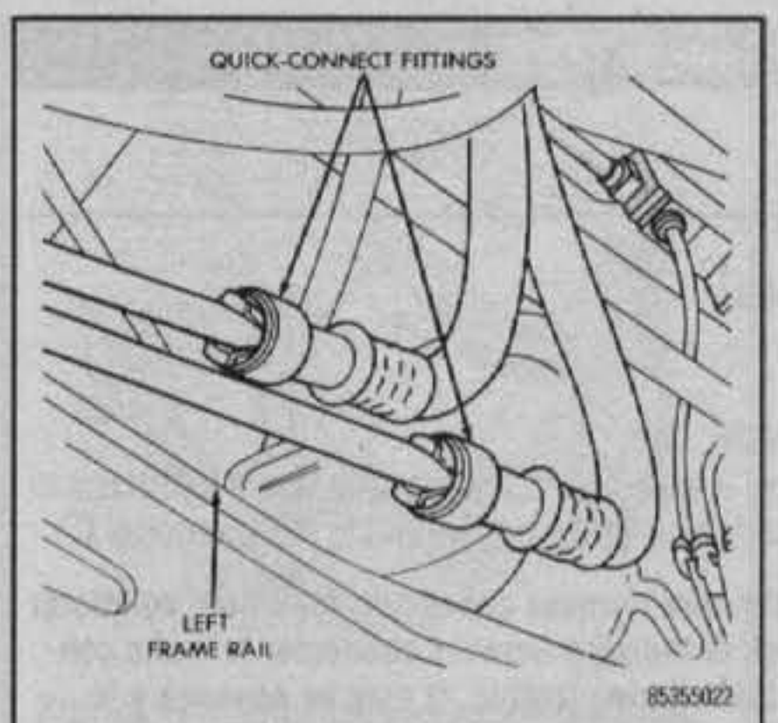

Fig. 17 Quick-connect fitting location

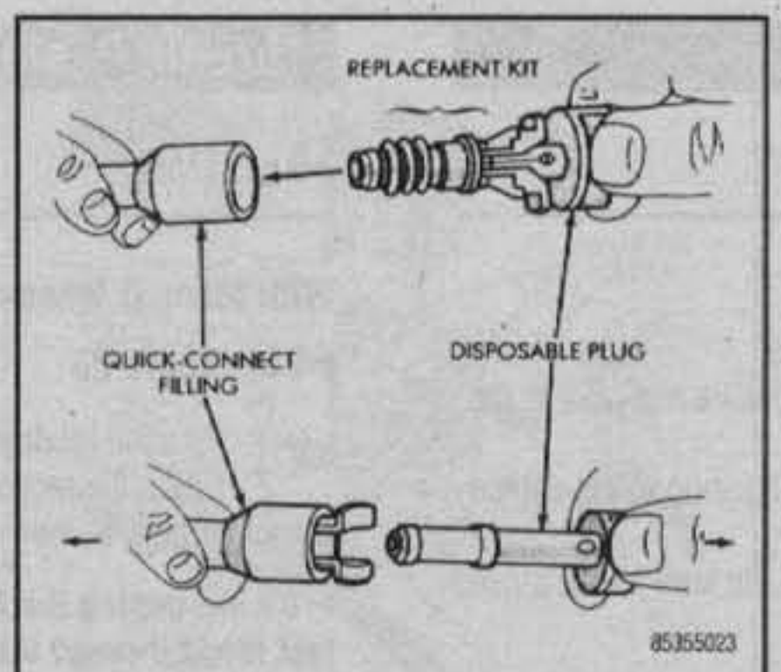

Fig. 18 Quick-connect fitting repair kit installation

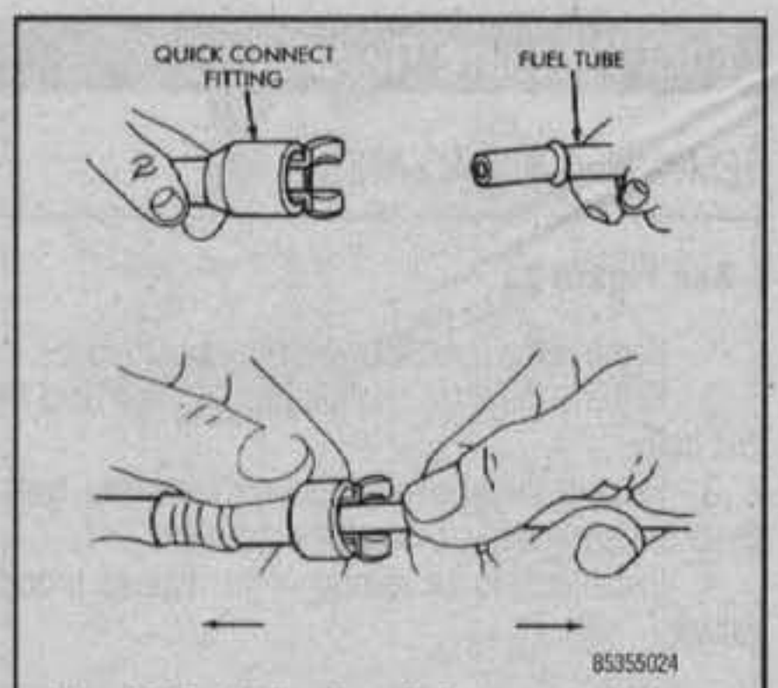

Fig. 19 Fuel tube to quick-connect fitting connection

WARNING

Whenever a fuel tube quick connect fitting is disconnected the O-rings, spacer and retainer must be replaced. Repair kits are available through the dealer parts department.

The retainer has two tabs that are squeezed against the fuel tube and then pulled outward to disconnect the fuel tube from the quick connect fitting/hose assembly. The retainer will stay on the fuel tube when the tube is disconnected. The O-rings and spacer will remain in the connector.

The O-rings and spacer can be removed with the bent end of an "L" shaped paper clip.

A repair kit, available through the dealer parts department, consists of the O-rings, spacer and retainer installed on a disposable plastic plug which when removed from the fitting leaves the new O-rings, spacer and retainer in the fitting. When the fuel line is pushed into the fitting a click is heard and the connection is complete. Follow the repair kit instructions.

Throttle Body

REMOVAL & INSTALLATION

See Figure 20

1. Disconnect the negative battery cable. Remove the upper air cleaner assembly.
2. Remove the lower air cleaner assembly retaining bolts, then remove the lower air cleaner assembly.
3. Remove the throttle cable and the return spring. Unplug the wire harness connector from the injector.
4. Unplug the wire harness connector from the wide open throttle switch. Unplug the wire harness connector from the ISC motor.
5. Disconnect the fuel supply pipe and return pipes from the throttle body.
6. Label and disconnect the vacuum hoses from the throttle body assembly.
7. Remove the throttle body–to–manifold retaining bolts, then remove the throttle body assembly from the intake manifold.

To install:

8. Clean the manifold and throttle body mating surfaces. Be sure to use a new gasket between the throttle body assembly and the intake manifold.
9. Install the throttle body assembly on the intake manifold. Torque the nuts to 16 ft. lbs. (22 Nm).
10. Connect the vacuum hoses to the throttle body assembly.
11. Connect the fuel supply and return pipes to the throttle body. Connect the fuel return pipe to the throttle body.
12. Engage the wire harness connector to the wide open throttle switch and the wire harness connector to the ISC motor.
13. Install the throttle cable and the return spring. Engage the wire harness connector to the injector.
14. Install the lower air cleaner assembly. Install the lower air cleaner assembly retaining bolts and tighten securely.
15. Install the upper air cleaner assembly.
16. Connect the negative battery cable.

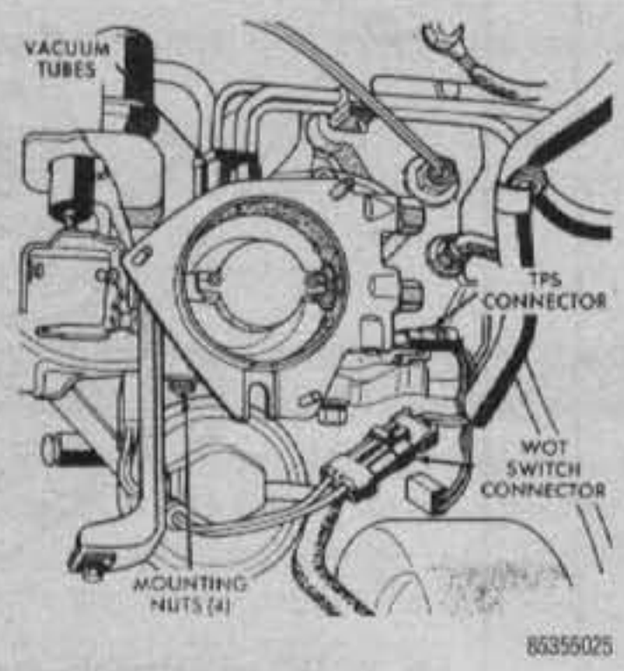

Fig. 20 Throttle body replacement

Fuel Body Assembly

See Figure 21

REMOVAL & INSTALLATION

1. Disconnect the negative battery cable.
2. Tag and disconnect all electrical harnesses at the throttle body.
3. Remove the throttle body assembly from the vehicle as outlined earlier.
4. Remove the Torx® head screws that retain the fuel body to the throttle body. Remove and discard the gasket.
5. Installation is the reverse of removal. Be sure to use a new gasket.

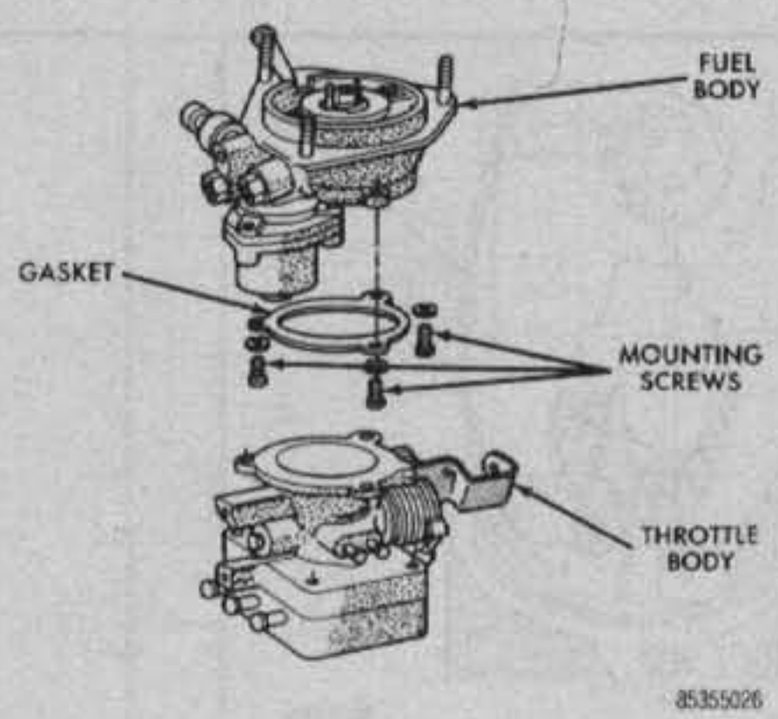

Fig. 21 Fuel body replacement

Fuel Pressure Regulator

REMOVAL & INSTALLATION

See Figure 22

1. Remove the throttle body assembly from the vehicle.
2. Remove the three retaining screws that hold the pressure regulator to the fuel body.
3. Remove the pressure regulator assembly. Note the location of the components for reassembly. Discard the gasket.
4. Installation is the reverse of the removal procedure. Be sure to use a new gasket.

Fuel Injector

See Figures 23 and 24

REMOVAL & INSTALLATION

1. Remove the air cleaner and hose assembly.
2. Unplug the fuel injector wire. Remove the fuel injector retainer clip screws, then remove the fuel injector retainer clip.
3. Using a small pair of pliers, gently grasp the center collar of the injector, between the electrical terminals, and carefully remove the injector using a lifting-twisting motion.
4. Discard the upper and lower O-rings. Note that the back-up (centering) ring fits over the upper O-ring.
5. Installation is the reverse of the removal procedure. Lubricate both O-rings with light oil before installation.

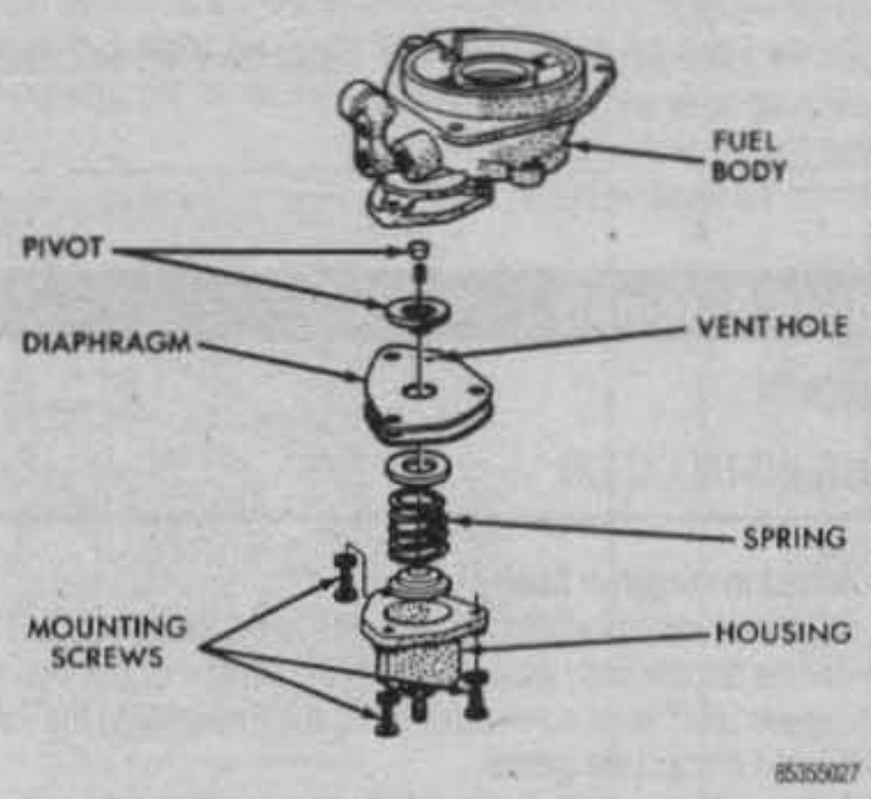

Fig. 22 Fuel pressure regulator replacement

Throttle Position Sensor (TPS)

ADJUSTMENT

With Manual Transmission

See Figure 25

1. Turn the ignition key **ON**.
2. Check the sensor input voltage. Connect the negative lead of a voltmeter to sensor terminal **B**, then connect the voltmeter positive lead to sensor terminal **C**.

➡Do not unplug the sensor wire harness connector. Insert the voltmeter test leads through the back of the wire harness connector to make contact with the sensor terminals during testing. It may be necessary to remove the throttle body from the intake manifold to gain access to the wire harness connector.

3. Move and hold the throttle plate in the wide–open position. Make sure the throttle linkage contacts the stop.
4. Note the voltmeter reading. Input voltage at terminals **B** and **C** should be 5.0 volts at wide open throttle.
5. Return the throttle plate to the closed position.
6. Check the sensor output voltage. Disconnect the voltmeter positive lead from sensor terminal **C** and connect it to terminal **A**.
7. Move and hold the throttle plate in the wide open position. Make sure the throttle linkage contacts the stop.
8. Note the voltmeter reading. Output voltage should be 4.6–4.7 volts. Adjust the output voltage by loosening the lower sensor retaining screw and pivoting the sensor in the adjustment slot for coarse adjustment. Loosen the other retaining screw and pivot the sensor for fine adjustment.
9. Remove the voltmeter and return the throttle plate to the closed position. Make sure the sensor retaining screws are tightened securely.
10. If removed, install the throttle body.

With Automatic Transmission

See Figure 26

Use the four terminal connector to adjust the TPS. The terminals are marked A, B, C and D on the connector.

1. Turn the ignition key **ON**.
2. Check the sensor input voltage. Connect the negative lead of a voltmeter to the back of sensor terminal **D**, then connect the voltmeter positive lead to the back of sensor terminal **A**.

➡Do not unplug the sensor wire harness connector. Insert the voltmeter test leads through the back of the wire harness connector to make contact with the sensor terminals during testing. It may be necessary to remove the throttle body from the intake manifold to gain access to the wire harness connector.

3. Note the input voltage reading at terminals **D** and **A**.
4. Check the sensor output voltage. Disconnect the voltmeter positive lead from sensor terminal **A** and connect it to terminal **B**.

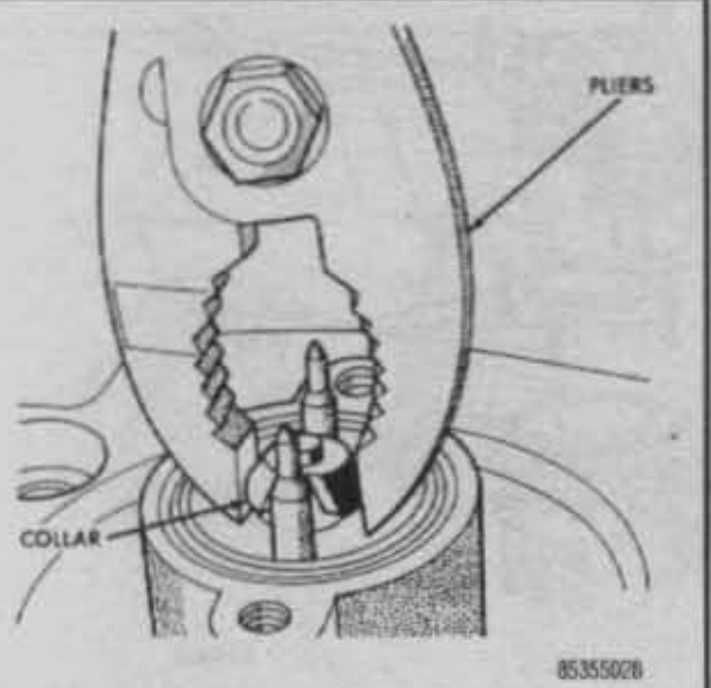

Fig. 23 Fuel injector removal

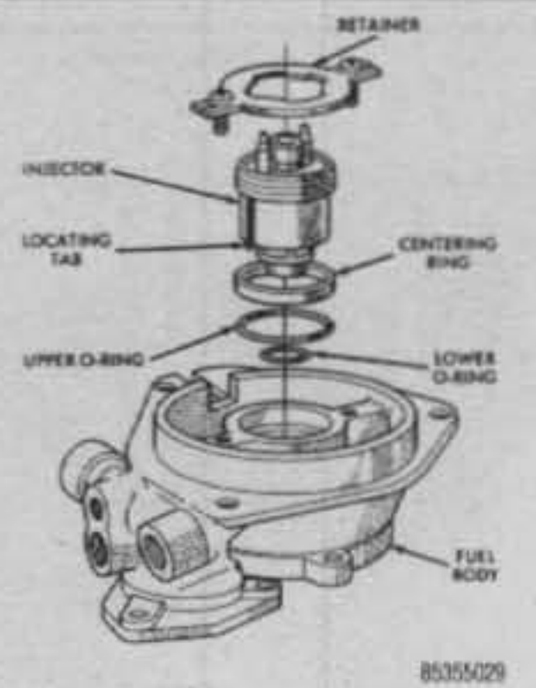

Fig. 24 Fuel injector components

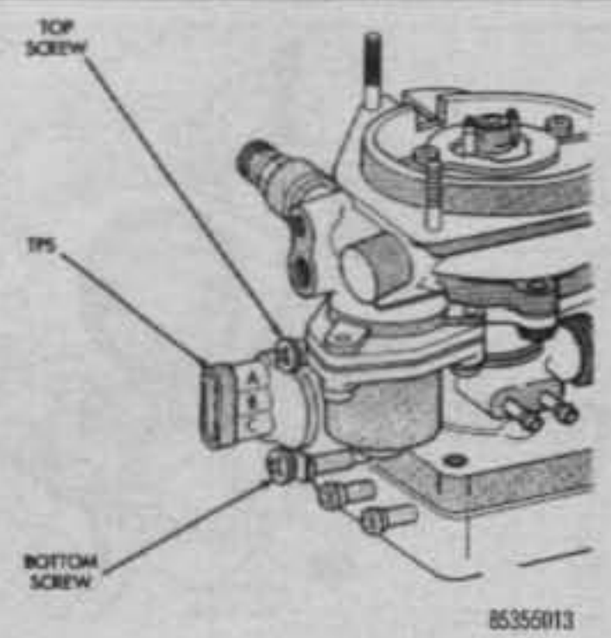

Fig. 25 TPS adjustment—manual transmission

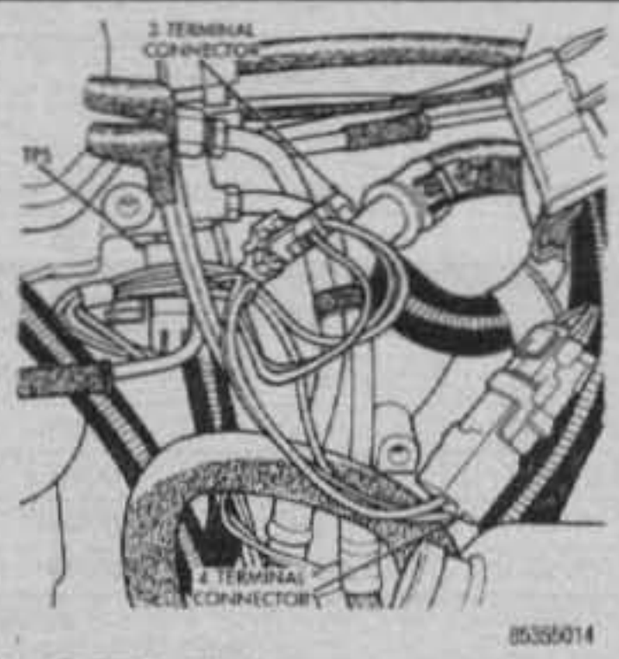

Fig. 26 TPS adjustment—automatic transmission

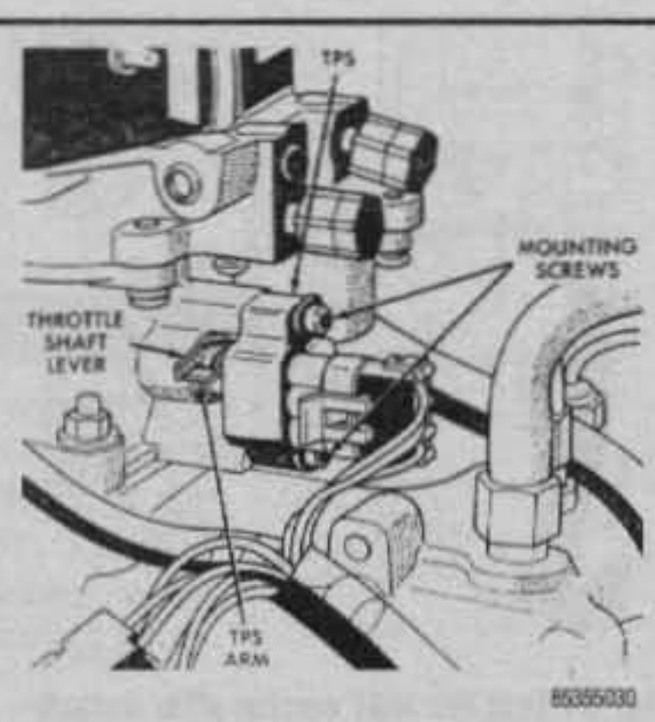

Fig. 27 TPS replacement

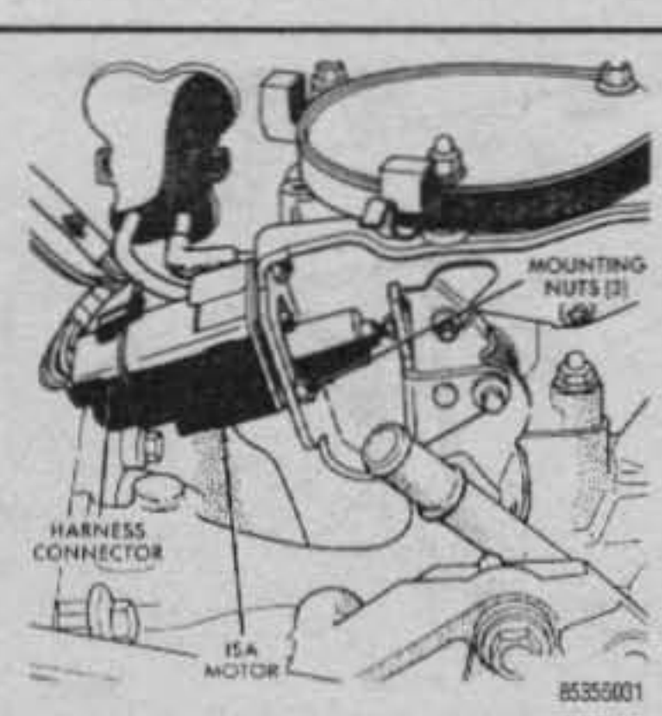

Fig. 28 Idle speed actuator replacement

5. Note the sensor output voltage across terminals **B** and **D**.
6. Divide the output voltage reading by the input voltage reading. The desired ratio should be .925 to .935. EXAMPLE: if the input voltage is 5 volts and the output voltage is 4.65 volts; divide 4.65 by 5 and the answer would be .93 or 93%.
7. Adjust the TPS until the correct ratio is obtained. To adjust input and output voltage loosen the sensor top retaining screw for a large adjustment or loosen the bottom retaining screw then pivot the sensor for fine adjustment.
8. Remove the voltmeter. Make sure the sensor retaining screws are tightened securely.
9. If removed, install the throttle body.

REMOVAL & INSTALLATION

See Figure 27

1. Remove the upper and lower air cleaner assemblies.
2. Remove the throttle body assembly from the vehicle.
3. Remove the two Torx® head retaining screws holding the TPS assembly to the throttle body.
4. Remove the throttle position sensor from the throttle shaft lever.
5. Installation is the reverse of removal.

Idle Speed Actuator Motor

The Idle Speed Actuator (ISA) is mounted on the throttle body and controls idle speed and engine deceleration throttle stop angle. The actuator changes the throttle stop angle by being a movable throttle stop. The ECU controls the ISA motor by providing the appropriate voltage outputs to produce the idle speed or throttle stop angle required for the particular engine operating condition. There is no idle speed adjustment.

REMOVAL & INSTALLATION

See Figure 28

The closed throttle switch is integral with the motor.

1. Disconnect the throttle return spring. Unplug the wire harness connector from the motor.
2. Remove the motor to bracket retaining nuts. Be sure to use a back-up wrench, as not to remove the motor studs which hold the motor together.
3. Remove the motor from the bracket.
4. Installation is the reverse of removal.

Manifold Absolute Pressure (MAP) Sensor

The MAP sensor is attached to the plenum chamber near the hood latch. It reacts to absolute pressure in the intake manifold and provides an input voltage to the ECU. Manifold pressure is used to supply mixture density information and ambient barometric pressure information that is necessary for computing the air/fuel mixture. A vacuum line from the throttle body attaches to the MAP sensor to provide its input pressure. A Manifold Air Temperature (MAT) sensor is located in the intake manifold and measures the air/fuel mixture temperature to allow the ECU to compensate for air density changes during high temperature operation.

TESTING

See Figure 29

1. Inspect the MAP sensor vacuum hose connections at the throttle body and sensor and repair as necessary.
2. Test the MAP sensor output voltage at the MAP sensor connector terminal **B** as marked on the sensor body, with the ignition switch **ON** (engine OFF). The output voltage should be 4–5 volts.
3. Test ECU terminal 33 for the same voltage described above to verify the wire harness condition. Repair as necessary.
4. Test the MAP sensor supply voltage at the sensor connector terminal **C** with the ignition **ON**. It should be 4.5–5.5 volts. This voltage should also be at terminal 16 of the ECU wire harness connector. Repair or replace the wire harness as necessary. Test the ECU with Diagnostic Tester MS 1700, if necessary.
5. Test the MAP sensor ground circuit at sensor connector terminal **A** and ECU connector terminal 17. Repair the wire harness, if necessary.
6. Test the MAP sensor ground circuit at the ECU connector between terminal 17 and terminal 2 with an ohmmeter. If the ohmmeter indicates an open circuit, inspect for a defective sensor ground connection on the flywheel/drive plate housing near the starter motor. If the ground connection is good, replace the ECU. If terminal 17 has a short circuit to 12 volts, correct this condition before replacing the ECU.

REMOVAL & INSTALLATION

See Figure 30

1. Unplug the MAP sensor electrical connector.
2. Disconnect the MAP sensor vacuum supply hose.
3. Remove the MAP sensor mounting nuts and remove the map sensor.
4. Installation is the reverse of removal.

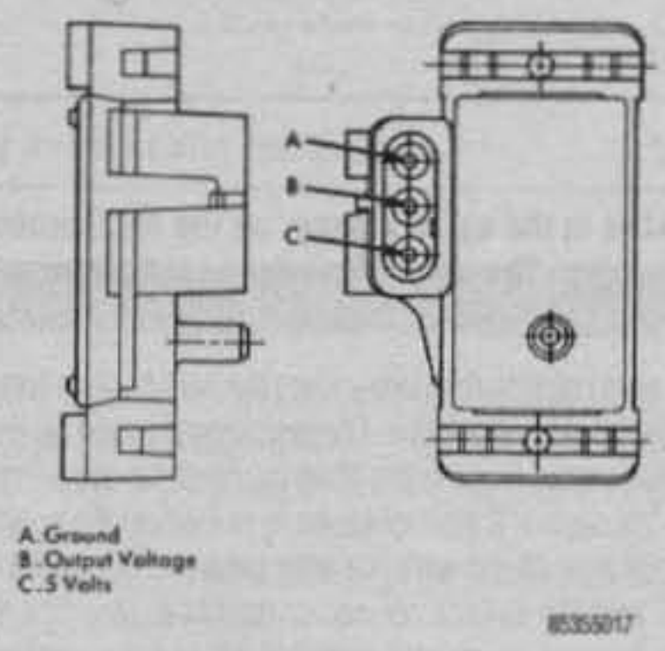

Fig. 29 MAP sensor connector terminals

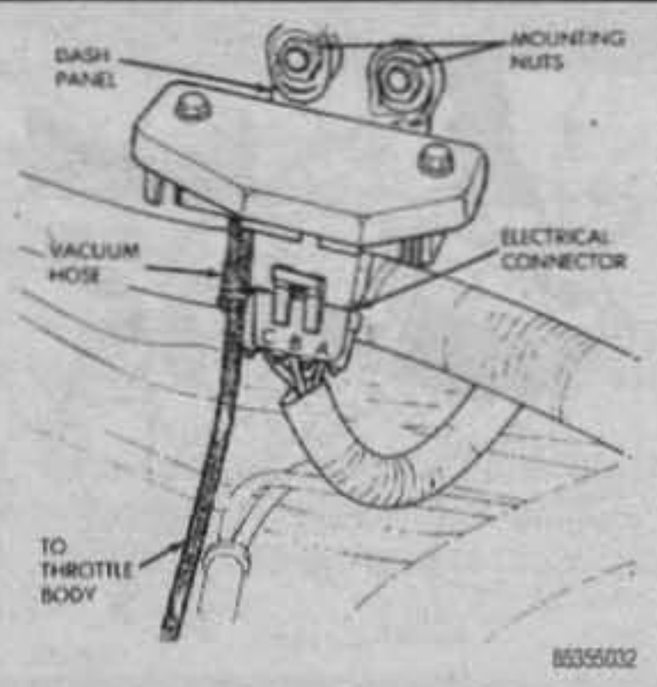

Fig. 30 MAP sensor replacement

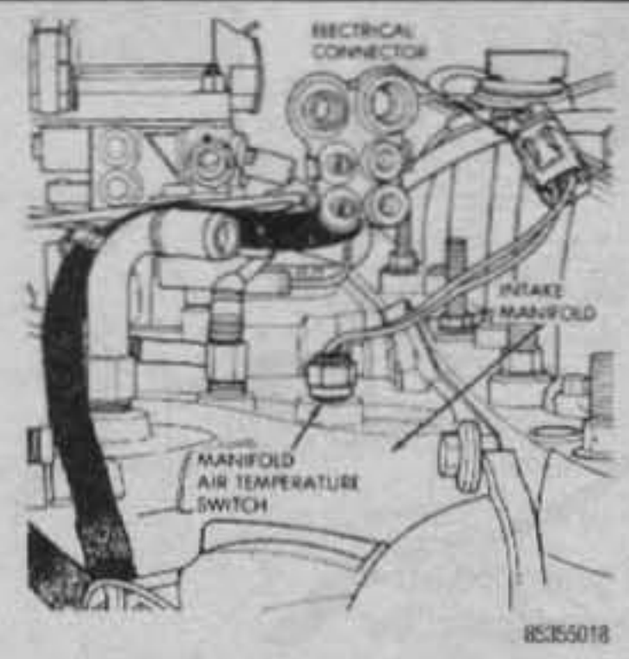

Fig. 31 Test the MAT sensor after detaching its electrical connector

Manifold Air/Fuel Temperature Sensor Temperature-to-Resistance Values (Approximate)

°F	°C	Ohms
212	100	185
160	70	450
100	38	1,600
70	20	3,400
40	4	7,500
20	-7	13,500
0	-18	25,000
-40	-40	100,700

8535518A

Fig. 32 MAT sensor and CTS temperature-to-resistance-values

Manifold Air Temperature (MAT) Sensor

TESTING

See Figures 31 and 32

➡The MAT sensor is tested in the same manner as the coolant temperature sensor, and should yield the same results. The only difference is the pin number of the test points.

1. Unplug the wire harness connector from the sensor, then test the resistance of the sensor with a digital volt-ohmmeter. The resistance should be less than 1000 ohms with the engine warm. Refer to the chart to check the temperature-to-resistance values and replace the sensor if the resistance is not within the specified range.
2. Test the resistance of the wire harness between ECU wire harness connector terminal 32 and the sensor connector terminal; also test the resistance between ECU wire harness connector terminal 14 and the sensor connector terminal. Repair the wire harness as necessary if resistance is greater than 1 ohm.

REMOVAL & INSTALLATION

1. Unplug the MAT sensor electrical connector.
2. Remove the MAT sensor from the intake manifold, using a deep socket wrench.
3. Installation is the reverse of removal. Tighten the MAT sensor to 21 ft. lbs. (28 Nm).

Coolant Temperature Sensor (CTS)

The CTS is located in the intake manifold coolant jacket and provides an engine coolant temperature signal to the ECU. The ECU uses the coolant temperature signal to enrich the air fuel mixture when the engine is cold, compensate for fuel condensation in the intake manifold, control engine warm-up speed, increase the ignition advance when the engine is cold and cut off the EGR system when the engine is cold.

TESTING

See Figure 32

➡The CTS is tested in the same manner as the MAT sensor, and should yield the same results. The only difference is the pin number of the test points.

1. Unplug the wire harness connector from the sensor, then test the resistance of the sensor with a digital volt-ohmmeter. The resistance should be less than 1000 ohms with the engine warm. Refer to the chart to check the temperature-to-resistance values and replace the sensor if the resistance is not within the specified range.
2. Test the resistance of the wire harness between ECU wire harness connector terminal 15 and the sensor connector terminal; also test the resistance between ECU wire harness connector terminal 32 and the sensor connector terminal. Repair the wire harness as necessary if an open circuit is indicated.

REMOVAL & INSTALLATION

See Figure 33

1. Detach the CTS electrical connector.
2. Remove the CTS from the intake manifold, then immediately plug the hole to prevent coolant loss.
3. Installation is the reverse of removal. Tighten the CTS to 21 ft. lbs. (28 Nm).

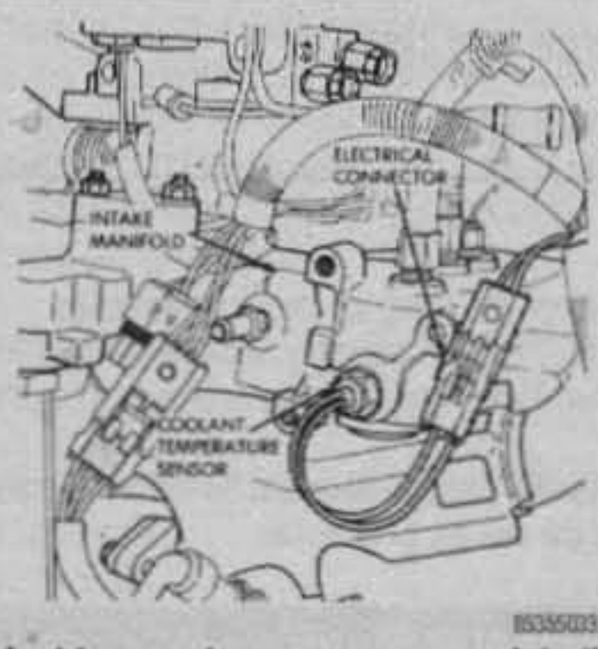

Fig. 33 The coolant temperature sensor screws into the intake manifold

Electronic Control Unit (ECU)

The Electronic Control Unit (ECU) is a sealed microprocessor unit located above the accelerator pedal under the instrument panel or below the glove box, next to the fuse panel, and is the heart of the electronic engine control system. The throttle position sensor (or wide open throttle switch) is mounted on the throttle body assembly and provides the ECU with an input signal of up to 5 volts to indicate throttle position. At minimum throttle opening (idle speed), a signal input of approximately one volt is transmitted to the ECU. As the throttle opening increases, the signal voltage to the ECU increases.

Pressure Sensing Switch

A pressure sensing switch is included in the power steering system to increase the idle speed during periods of high pump load and low engine rpm. Input signals from the pressure switch to the ECU are routed through the A/C request and A/C select input circuits. When pump pressure exceeds 250–300 psi (1724–2068 kPa), the switch contacts close and transmit an input signal to the ECU. The ECU raises engine idle speed immediately after receiving the pressure switch input signal.

B+ Latch System Power Relay

The system power relay is located on the right strut tower and is initially energized when starting the engine. The relay remains energized for 3–5 sec-

onds after the engine stops to enable the ECU to extend the Idle Speed Actuator (ISA) for the next start-up. The fuel pump control relay is also located on the front of the right strut tower. Battery voltage is applied to the fuel pump control relay through the ignition switch and is energized when a ground is provided by the ECU. In this manner, the ECU controls fuel pump operation.

EGR/Canister Purge Solenoid

The vacuum for both the Exhaust Gas Recirculation (EGR) valve and the vapor canister purge function is controlled by the EGR/Canister Purge Solenoid. When energized by the ECU, it cuts off vacuum to the EGR valve and canister. The solenoid is energized during engine warm-up, closed throttle (idle), Wide Open Throttle (WOT) and rapid acceleration/deceleration. If the solenoid wire connector is disconnected, the EGR valve and canister purge function will be operational at all times.

Engine Speed Sensor (Crankshaft Position Sensor)

The engine speed sensor is attached to the flywheel/drive plate housing. This sensor detects the flywheel/drive plate teeth as they pass during engine operation and provides engine speed and crankshaft angle information to the ECU. The flywheel/drive plate has a large trigger tooth and notch located every 90 degrees and 12 smaller teeth before each Top Dead Center (TDC) position. When a small tooth and notch pass the magnet core in the sensor, the concentration and subsequent collapse of the magnetic flux induces a small voltage spike into the sensor pickup coil winding. The higher voltage spike indicates to the ECU that a piston will be at TDC position 12 teeth later. The ignition timing for the cylinder is either advanced or retarded as necessary by the ECU, according to the sensor inputs.

Oxygen Sensor Heating Element

TESTING

Connect an ohmmeter's test leads to terminals **A** and **B** of the sensor connector. Resistance should be between 5–7 ohms. Replace the sensor if any other readings are obtained.

Wide-Open Throttle (WOT) Switch

TESTING

See Figure 34

1. Unplug the harness terminal connector from the WOT switch.
2. Test the on-off operation of the switch with a digital volt-ohmmeter while operating the switch manually.
3. The resistance should be infinite when the throttle is closed and a low resistance should be indicated when the throttle is wide open. Test the switch operation several times and replace the WOT switch is defective.
4. Engage the wire harness connector. With the ignition switch **ON**, test the WOT switch voltage at the diagnostic connector terminals D2-6 (+) and D2-7 (–). The voltage should be zero at the WOT position and greater than 2 volts if not at the WOT position.
5. If the voltage is always zero, test for a short circuit to ground in the wire harness or switch, or an open circuit between terminal 8 of the ECU connector and the switch connector. Repair or replace the wire harness as necessary.

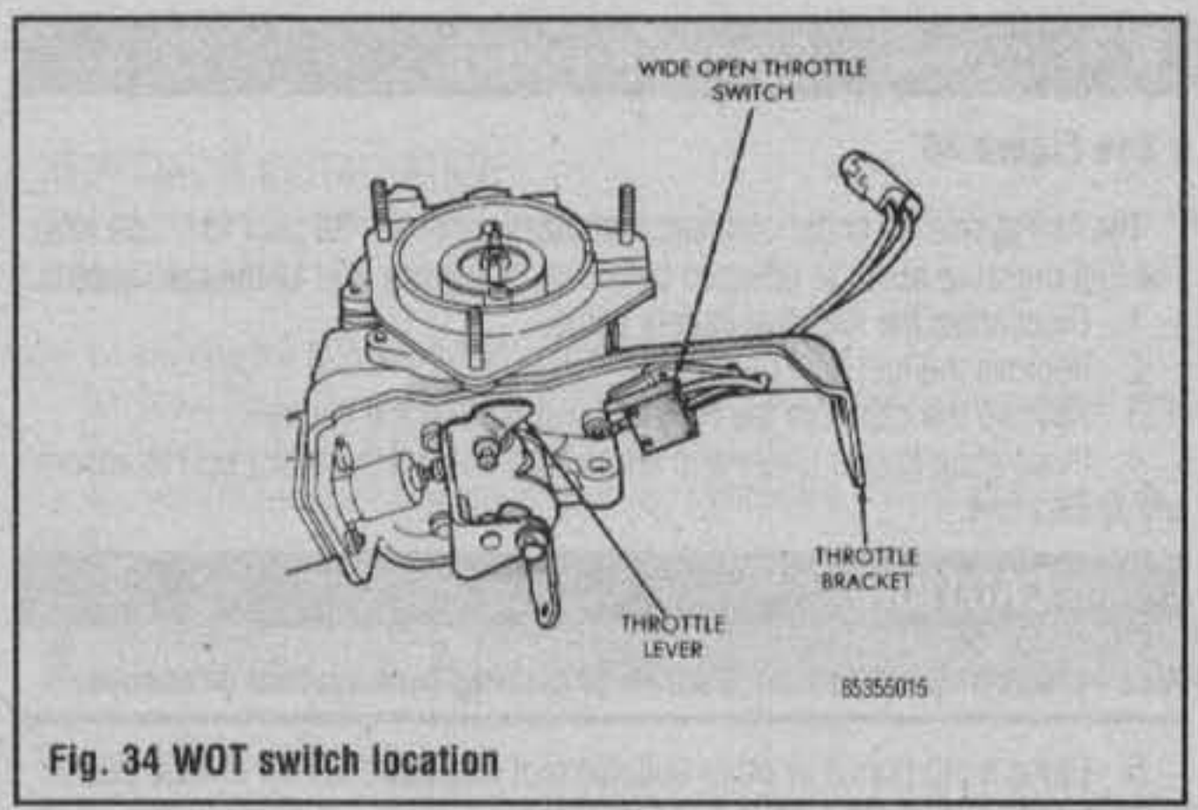

Fig. 34 WOT switch location

6. If the voltage is always greater than 2 volts, test for an open circuit in the wire or connector between the switch and ground. Repair as necessary.

Closed Throttle (Idle) Switch

TESTING

See Figure 35

It is important that all testing be done with the Idle Speed Actuator (ISA) motor plunger in the fully extended position, as it would be after normal engine shutdown. If it is necessary to extend the ISA motor plunger to test the switch, an ISA motor failure can be suspected.

1. With the ignition switch **ON**, test the switch voltage at the diagnostic connector terminals D2-13 (+) and D2-7 (–). The voltage should be close to zero at closed throttle and greater than 2 volts when off the closed throttle position.
2. If the voltage is always zero, test for a short circuit to ground in the wire harness or switch, or for an open circuit between ECU connector terminal 25 and the switch.
3. If the voltage is always more than 2 volts, test for an open circuit in the wire harness between the ECU and the switch connector, and between the switch connector and ground. Repair or replace the wire harness as necessary.

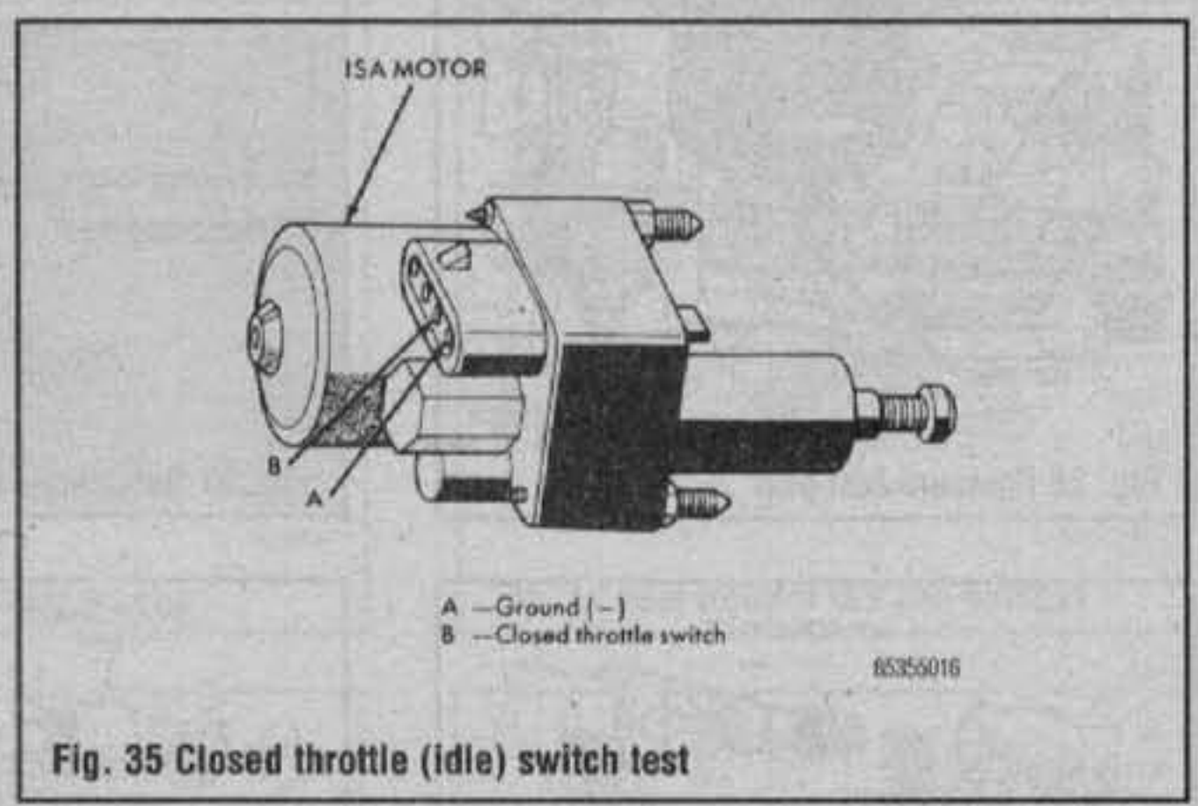

Fig. 35 Closed throttle (idle) switch test

MULTI-POINT FUEL INJECTION (MFI) SYSTEM

All 1991–95 Wranglers employ a Chrysler sequential Multi-Point Fuel Injection (MFI) System in both the 2.5L and 4.0L engines. The system is controlled by a Single Board Engine Controller II (SBECII) (1991–92) or Powertrain Control Module (PCM) (1993–95). The SBECII or PCM is a pre-programmed, dual microprocessor digital computer. It regulates ignition timing, air-fuel ratio, emission control devices, charging system, speed control and idle speed.

Fuel is injected into the intake port directly above the intake valve in precise metered amounts through electrically operated injectors. The injectors are fired in a specific sequence by the SBECII or PCM. The SBECII or PCM maintains an air/fuel ratio of 14.7:1 by constantly adjusting injector pulse width. Injector pulse width is the length of time the injector is open.

The SBECII or PCM adjusts ignition timing by controlling the ignition coil. Base ignition timing is not adjustable.

For complete diagnostic procedures, please refer to Section 4.

Releasing Fuel System Pressure

See Figure 36

The fuel system is under constant fuel pressure of 19–39 psi (131–269 kPa). The fuel pressure must be released before servicing any part of the fuel system.

1. Disconnect the negative battery cable.
2. Remove the fuel tank filler cap.
3. Remove the cap from the pressure test port on the fuel rail.
4. Place shop towels under and around the fuel pressure test port to absorb any spilled fuel.

CAUTION

Wear proper eye protection when releasing fuel system pressure.

5. Using a pin punch or other suitable tool wrapped in shop towels, push the test port valve in the relieve fuel pressure.
6. Remove the shop towels and dispose of properly.
7. Install the cap on the pressure test port on the fuel rail.
8. Install the fuel tank filler cap and connect the negative battery cable.

Quick Connect Fittings

See Figures 37, 38, 39 and 40

MFI engines use quick connect fuel tube fittings at the inlet and outlet ports of the fuel rail. The fittings consists of two O-rings, a spacer (installed between the O-rings), and an O-ring retainer.

WARNING

Whenever a fuel tube quick connect fitting is disconnected, the O-rings, spacer and retainer must be replaced. Repair kits are available through a dealer's parts department.

The retainer has two tabs that are squeezed against the fuel tube and then pulled outward to disconnect the fuel tube from the quick connect fitting/hose assembly. The retainer will stay on the fuel tube when the tube is disconnected. The O-rings and spacer will remain in the connector.

The O-rings and spacer can be removed with the bent end of an "L" shaped paper clip.

A repair kit, available through the dealer parts department, consists of the O-rings, spacer and retainer installed on a disposable plastic plug which when removed from the fitting leaves the new O-rings, spacer and retainer in the fitting. When the fuel line is pushed into the fitting a click is heard and the connection is complete. Follow the repair kit instructions.

Throttle Body

REMOVAL & INSTALLATION

See Figure 41

1. Disconnect the negative battery cable.
2. Disconnect the air cleaner snorkel from the throttle body.
3. Disconnect the Automatic Idle Speed (AIS) motor and TPS wire connectors.
4. Remove the accelerator cable, throttle cable and speed control cable, if so equipped from the throttle arm.
5. Remove the throttle body retaining bolts and remove the throttle body assembly.

To install:

6. Clean the manifold and throttle body mating surfaces. Be sure to use a new gasket between the throttle body assembly and the intake manifold.
7. Install the throttle body assembly and torque the nuts to 9 ft. lbs. (12 Nm).
8. Engage the AIS motor and Throttle Position Sensor (TPS) wire connectors.
9. Connect the accelerator cable, throttle cable and speed control cable, if so equipped, to the throttle arm.

When the automatic transmission throttle cable is connected it must be adjusted. Please refer to Section 7.

10. On automatic transmissions, connect and adjust the line pressure cable. Refer to Section 7 of this manual.
11. Connect the air cleaner snorkel to the throttle body.
12. Connect the negative battery cable.

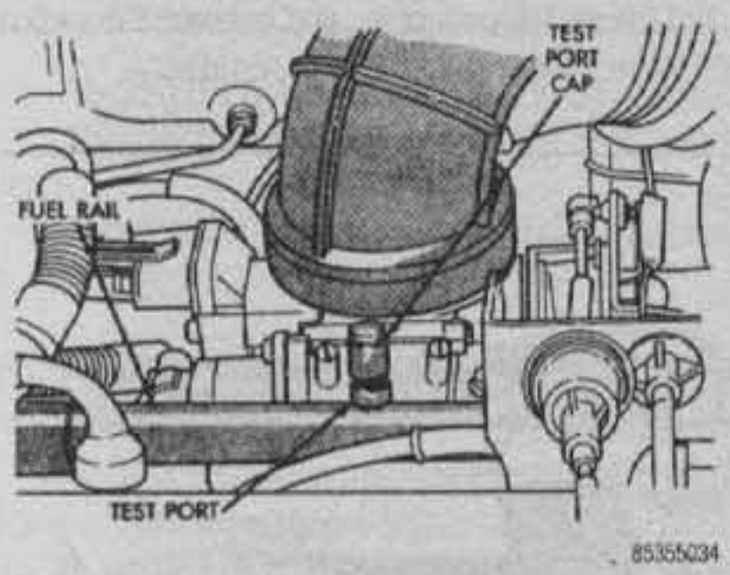

Fig. 36 Pressure test port

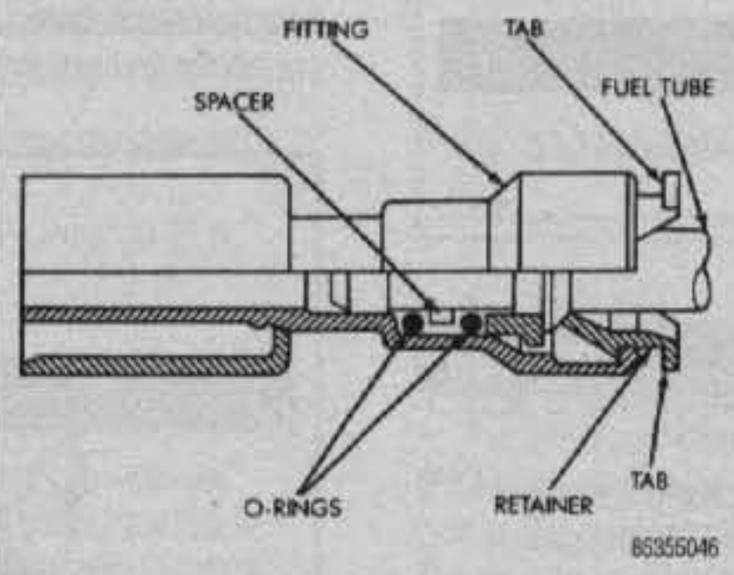

Fig. 37 Quick connect fitting

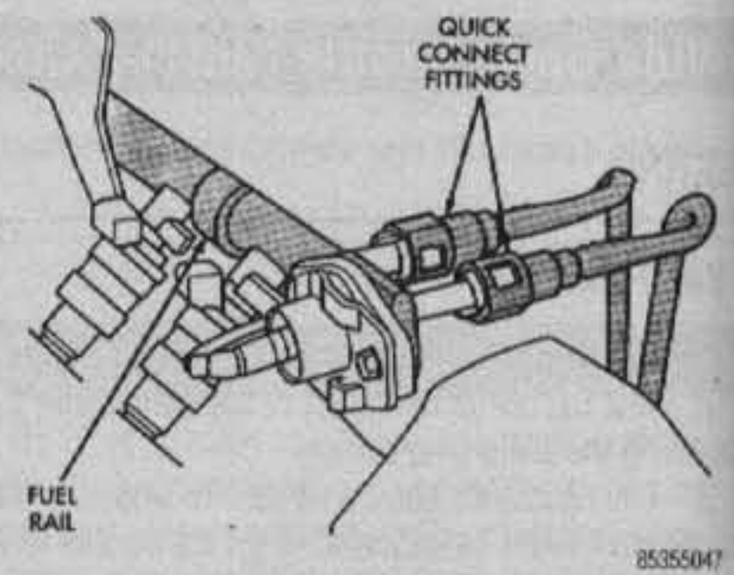

Fig. 38 Quick connect fitting location

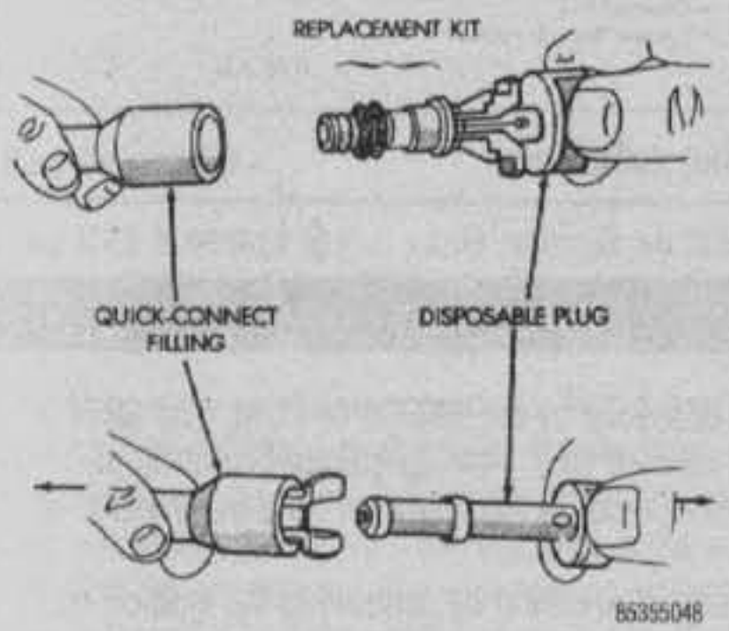

Fig. 39 Quick connect fitting repair kit installation

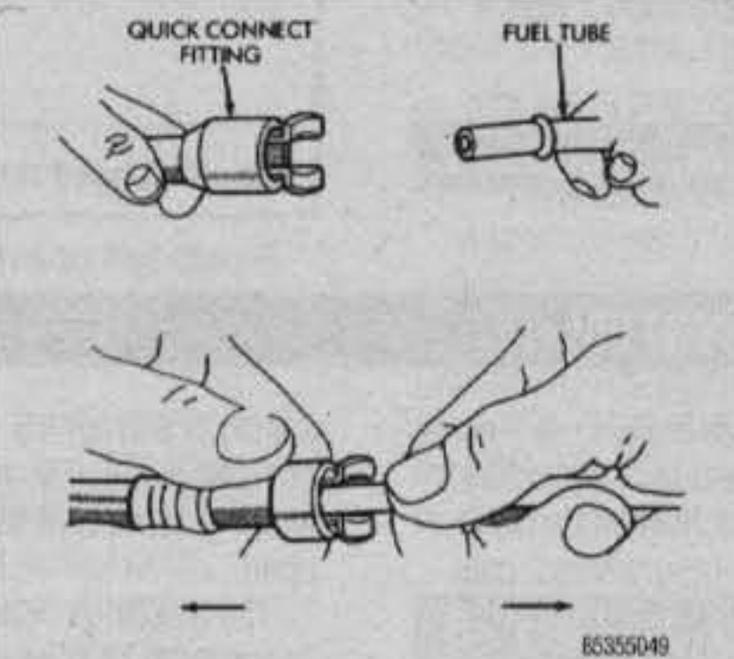

Fig. 40 Fuel tube to quick connect fitting connection

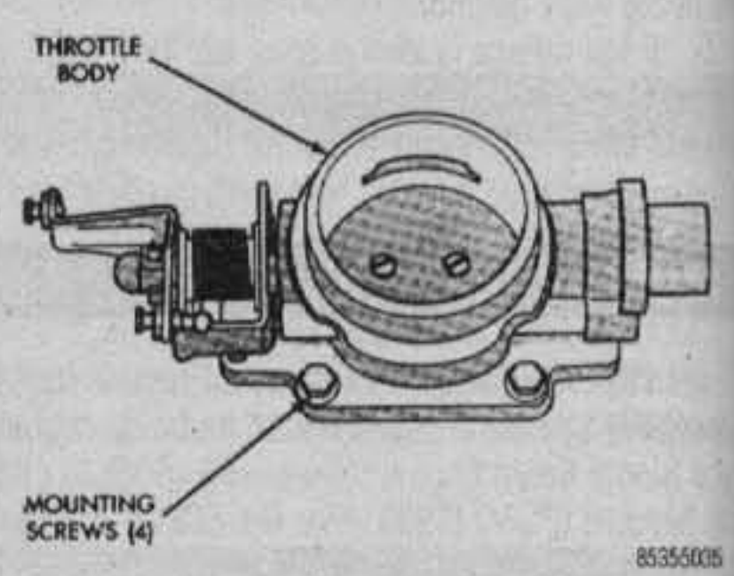

Fig. 41 Throttle body replacement

Fuel Injector

REMOVAL AND INSTALLATION

See Figures 42, 43 and 44

1. Disconnect the negative battery cable.
2. Relieve fuel system pressure.
3. Disconnect the fuel lines at the ends of the fuel rail assembly.
4. Mark and disengage the injector wire harness connectors.
5. Remove the fuel rail retaining bolts.
6. Disconnect the vacuum line from the fuel pressure regulator.
7. Remove the fuel rail assembly from the engine.

➡On models with automatic transmission, it may be necessary to remove the automatic transmission throttle pressure cable and bracket to remove the fuel rail assembly.

8. Remove the clips that retain the injectors to the fuel rail and remove the injectors.

To install:

9. Install the injectors and clips.
10. Install the fuel rail and tighten the fuel rail mounting bolts to 20 ft. lbs. (27 Nm).
11. Connect the vacuum line to the fuel pressure regulator.
12. Engage the fuel injector electrical connectors.
13. Connect the fuel lines to the injectors.
14. Connect the negative battery cable.

Manifold Air Temperature (MAT) Sensor

REMOVAL & INSTALLATION

See Figures 45 and 46

1. Unplug the MAT sensor electrical connector.
2. Remove the MAT sensor from the intake manifold, using a deep socket wrench.
3. Installation is the reverse of removal. Tighten the MAT sensor to 21 ft. lbs. (28 Nm).

Coolant Temperature Sensor (CTS)

REMOVAL & INSTALLATION

See Figure 47

1. Unplug the CTS electrical connector.
2. Drain the cooling system until the coolant level is below the cylinder head.
3. Remove the CTS from the thermostat housing.
4. Installation is the reverse of removal. Tighten the CTS to 21 ft. lbs. (28 Nm).

Throttle Position Sensor

REMOVAL & INSTALLATION

See Figure 46

The throttle position sensor is mounted to the throttle body.

1. Unplug the TPS electrical connector.
2. Unfasten the TPS mounting screws, then remove the TPS.

➡The throttle shaft end slides into a socket in the TPS. The TPS must be installed so that it can be rotated a few degrees. If the sensor will not rotate, install the sensor with the throttle shaft on the other side of the socket tangs. The TPS will be under slight tension when rotated.

To install:

3. Position the TPS and attach its mounting screws.
4. Fasten the TPS electrical connector.

Vehicle Distance (Speed) Sensor

REMOVAL & INSTALLATION

See Figure 48

The vehicle distance (speed) sensor is located on the transfer case.

1. Unplug the sensor electrical connector.

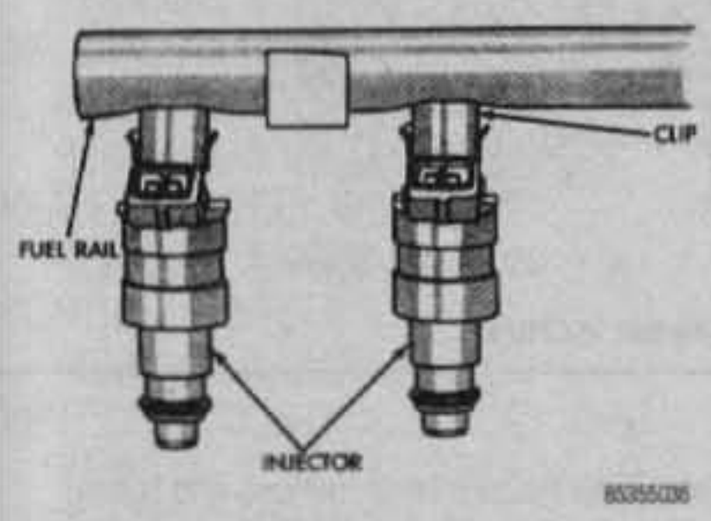

Fig. 42 Fuel injector retaining clips

Fig. 43 Fuel injector retaining clip

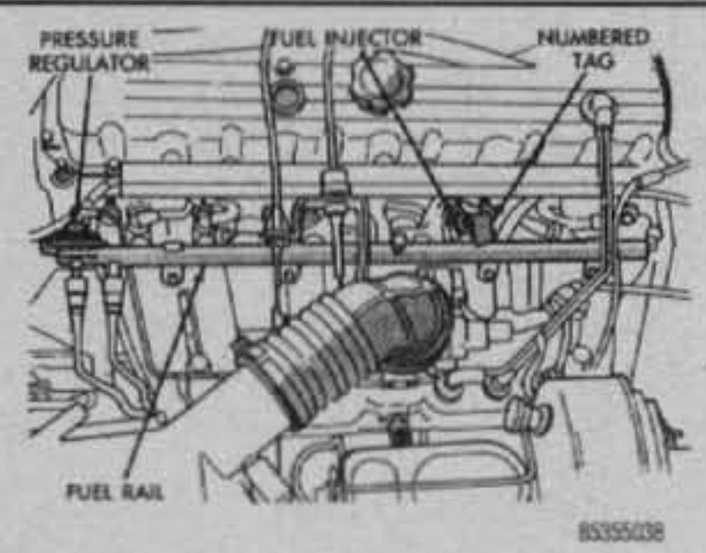

Fig. 44 Fuel injector rail and harness

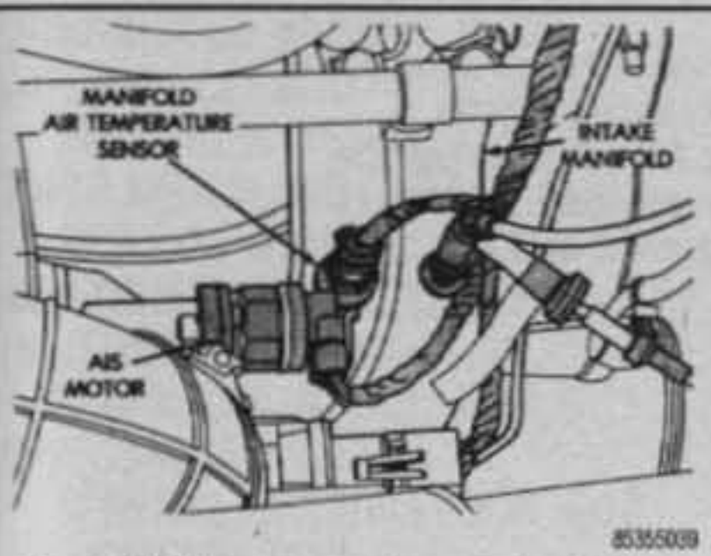

Fig. 45 MAT sensor replacement—2.5L engine

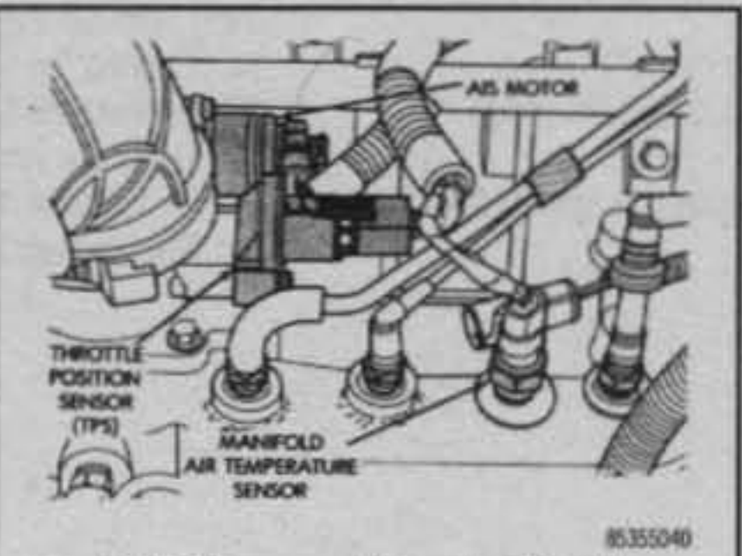

Fig. 46 MAT sensor, TPS and AIS motor—4.0L engine

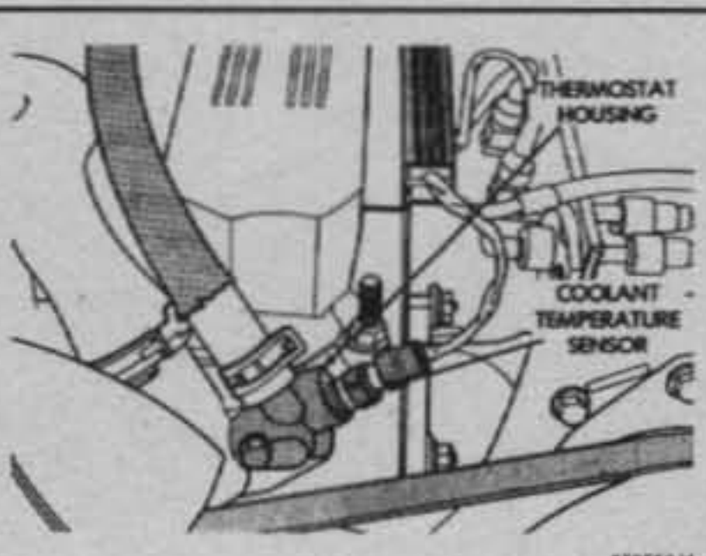

Fig. 47 CTS replacement

2. Loosen the sensor nut and remove the sensor.
3. Installation is the reverse of removal.

Engine Controller

REMOVAL & INSTALLATION

See Figure 49

The engine controller is located in the engine compartment behind the washer fluid reservoir.

1. Disconnect the negative battery cable.
2. Remove the washer fluid reservoir.
3. Loosen the 60-way connector mounting screw until the connector can be disengaged from the engine controller.
4. Pull the 60-way connector straight back from the engine controller.
5. Remove the engine controller mounting screws and remove the engine controller.
6. Installation is the reverse of removal.

Manifold Absolute Pressure (MAP) Sensor

REMOVAL & INSTALLATION

See Figure 50

1. Unplug the MAP sensor electrical connector.
2. Disconnect the MAP sensor vacuum supply hose.
3. Unfasten the MAP sensor mounting nuts, then remove the MAP sensor.
4. Installation is the reverse of removal.

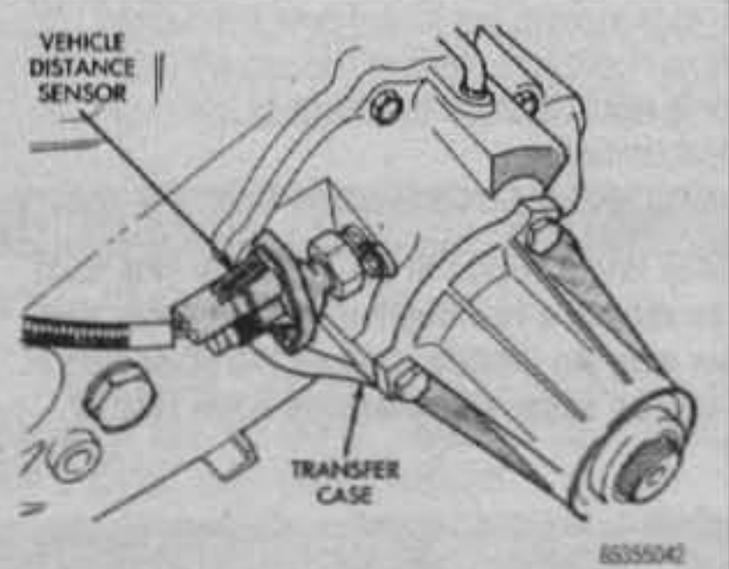

Fig. 48 Vehicle distance sensor location

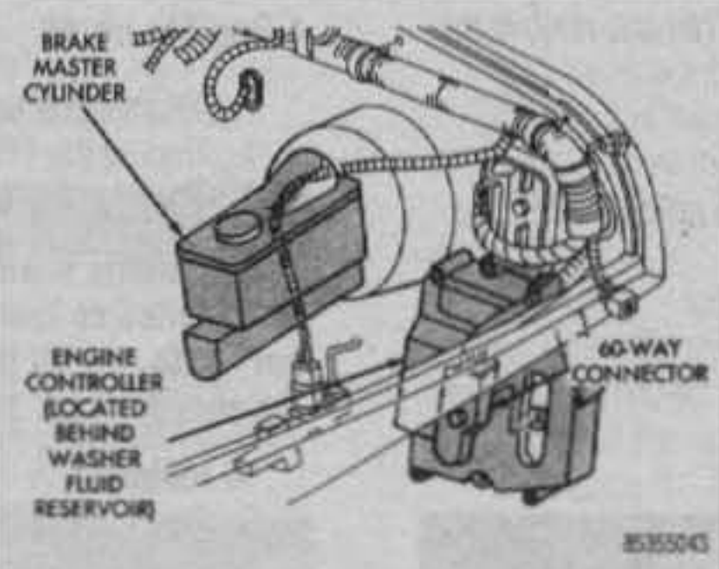

Fig. 49 Engine controller location

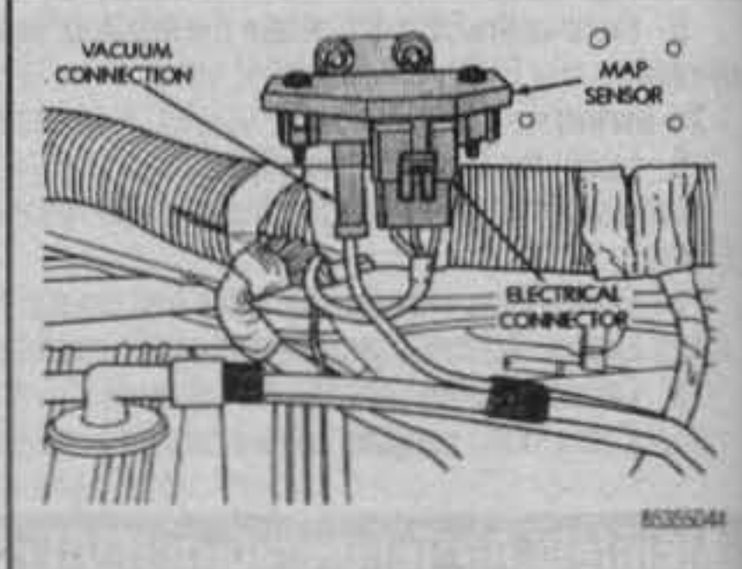

Fig. 50 MAP sensor replacement

FUEL TANK

Tank Assembly

REMOVAL & INSTALLATION

See Figure 51

Before removing the fuel tank, either drain or siphon the majority of fuel to make handling easier. Make sure that any remaining fuel is below the level of the attached hoses.

1. Disconnect the negative battery cable.
2. Relieve the fuel system pressure.
3. Remove the fuel filler cap and drain the fuel tank.
4. Raise and support the vehicle safely.
5. Disconnect fuel fill and vent hoses from the filler neck.
6. Label and disconnect all other fuel supply and return hoses attached to the tank.
7. Place a floor jack under the fuel tank.

➡Do not loosen the fuel tank strap nuts. The fuel tank and skid plate are removed as a unit after loosening the skid plate/fuel tank assembly mounting nuts.

8. Remove the skid plate/fuel tank assembly mounting nuts.
9. Lower the skid plate/fuel tank assembly slightly and detach the gauge sender wire.
10. Lower tank from the vehicle. Unfasten the tank strap nuts to remove the skid plate.

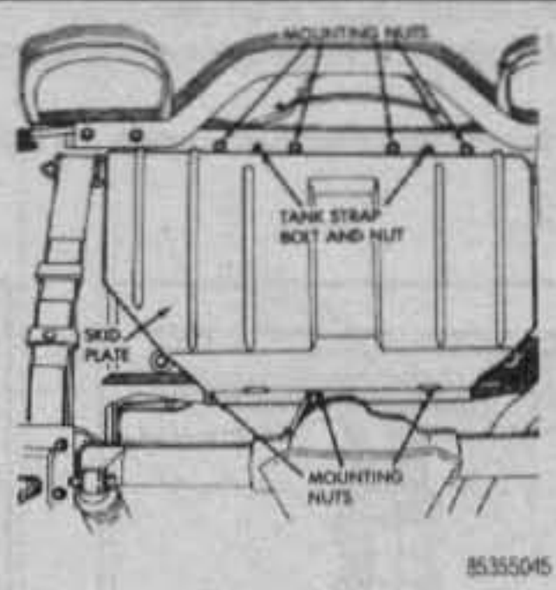

Fig. 51 Fuel tank mounting nut locations

To install:

11. Place tank into skid plate. Wrap straps around fuel tank and tighten mounting nuts to 65 inch lbs. (7 Nm).
12. Partially raise fuel tank and connect gauge sender wire.
13. Raise the tank into position and tighten the mounting nuts to 12 ft. lbs. (16 Nm). Remove the jack.
14. Connect the fuel filler and vent hoses to the filler neck.
15. Connect the fuel supply and return hoses.
16. Lower the vehicle, then fill and cap the fuel tank.
17. Connect the negative battery cable.
18. Start the vehicle and check for leaks.

UNDERSTANDING AND TROUBLESHOOTING ELECTRICAL SYSTEMS 6-2
BASIC ELECTRICAL THEORY 6-2
HOW DOES ELECTRICITY WORK: THE WATER ANALOGY 6-2
OHM'S LAW 6-2
ELECTRICAL COMPONENTS 6-2
POWER SOURCE 6-2
GROUND 6-3
PROTECTIVE DEVICES 6-3
SWITCHES & RELAYS 6-3
LOAD 6-3
WIRING & HARNESSES 6-3
CONNECTORS 6-4
TEST EQUIPMENT 6-4
JUMPER WIRES 6-4
TEST LIGHTS 6-4
MULTIMETERS 6-5
TROUBLESHOOTING ELECTRICAL SYSTEMS 6-5
TESTING 6-6
OPEN CIRCUITS 6-6
SHORT CIRCUITS 6-6
VOLTAGE 6-6
VOLTAGE DROP 6-6
RESISTANCE 6-6
WIRE AND CONNECTOR REPAIR 6-7
HEATING AND AIR CONDITIONING 6-7
HEATER HOUSING ASSEMBLY 6-7
REMOVAL & INSTALLATION 6-7
BLOWER MOTOR 6-7
REMOVAL & INSTALLATION 6-7
HEATER CORE 6-8
REMOVAL & INSTALLATION 6-8
AIR CONDITIONING COMPRESSOR 6-8
ISOLATING THE COMPRESSOR 6-9
REMOVAL & INSTALLATION 6-9
HEATER CONTROL VALVE 6-9
REMOVAL & INSTALLATION 6-9
CONTROL PANEL 6-9
REMOVAL & INSTALLATION 6-9
VENT DOOR CONTROL CABLES 6-10
REMOVAL & INSTALLATION 6-10
FRESH AIR DOOR VACUUM MOTOR 6-10
REMOVAL & INSTALLATION 6-10
WINDSHIELD WIPERS 6-10
WIPER BLADES AND ARMS 6-10
REMOVAL & INSTALLATION 6-10
WIPER MOTOR AND LINKAGE 6-10
REMOVAL & INSTALLATION 6-10
INSTRUMENT AND SWITCHES 6-11
INSTRUMENT CLUSTER 6-11
REMOVAL & INSTALLATION 6-11
SPEEDOMETER 6-12
REMOVAL & INSTALLATION 6-12
TACHOMETER 6-13
REMOVAL & INSTALLATION 6-13
GAUGE CLUSTER 6-13
REMOVAL & INSTALLATION 6-13
HEADLIGHT SWITCH 6-13
REMOVAL & INSTALLATION 6-13
RADIO 6-14
RADIO 6-14
REMOVAL & INSTALLATION 6-14
CRUISE CONTROL 6-14
CRUISE CONTROL REGULATOR 6-14
REPLACEMENT 6-14
SERVO 6-15
REMOVAL & INSTALLATION 6-15
SPEED SENSOR 6-15
REMOVAL & INSTALLATION 6-15
CONTROL SWITCH 6-15
REMOVAL & INSTALLATION 6-15
SERVO CABLE 6-16
REMOVAL & INSTALLATION 6-16
LIGHTING 6-16
HEADLIGHTS 6-16
REMOVAL & INSTALLATION 6-16
AIMING 6-16
FOG LIGHTS 6-17
AIMING 6-17
SIGNAL, PARKING, BRAKE AND MARKER LIGHTS 6-17
REMOVAL & INSTALLATION 6-17
CENTER HIGH-MOUNTED STOP LAMP 6-17
REMOVAL & INSTALLATION 6-17
TRAILER WIRING 6-19
CIRCUIT PROTECTION 6-19
FUSES AND CIRCUIT BREAKERS 6-19
POWER DISTRIBUTION CENTER 6-19
FUSIBLE LINKS 6-20
REPLACEMENT 6-20
WIRING DIAGRAMS 6-21

6

CHASSIS ELECTRICAL

UNDERSTANDING AND TROUBLESHOOTING ELECTRICAL SYSTEMS 6-2
HEATING AND AIR CONDITIONING 6-7
WINDSHIELD WIPERS 6-10
INSTRUMENT AND SWITCHES 6-11
RADIO 6-14
CRUISE CONTROL 6-14
LIGHTING 6-16
TRAILER WIRING 6-16
CIRCUIT PROTECTION 6-19
WIRING DIAGRAMS 6-21

UNDERSTANDING AND TROUBLESHOOTING ELECTRICAL SYSTEMS

Basic Electrical Theory

See Figure 1

For any 12 volt, negative ground, electrical system to operate, the electricity must travel in a complete circuit. This simply means that current (power) from the positive (+) terminal of the battery must eventually return to the negative (-) terminal of the battery. Along the way, this current will travel through wires, fuses, switches and components. If, for any reason, the flow of current through the circuit is interrupted, the component fed by that circuit will cease to function properly.

Perhaps the easiest way to visualize a circuit is to think of connecting a light bulb (with two wires attached to it) to the battery—one wire attached to the negative (-) terminal of the battery and the other wire to the positive (+) terminal. With the two wires touching the battery terminals, the circuit would be complete and the light bulb would illuminate. Electricity would follow a path from the battery to the bulb and back to the battery. It's easy to see that with longer wires on our light bulb, it could be mounted anywhere. Further, one wire could be fitted with a switch so that the light could be turned on and off.

The normal automotive circuit differs from this simple example in two ways. First, instead of having a return wire from the bulb to the battery, the current travels through the frame of the vehicle. Since the negative (-) battery cable is attached to the frame (made of electrically conductive metal), the frame of the vehicle can serve as a ground wire to complete the circuit. Secondly, most automotive circuits contain multiple components which receive power from a single circuit. This lessens the amount of wire needed to power components on the vehicle.

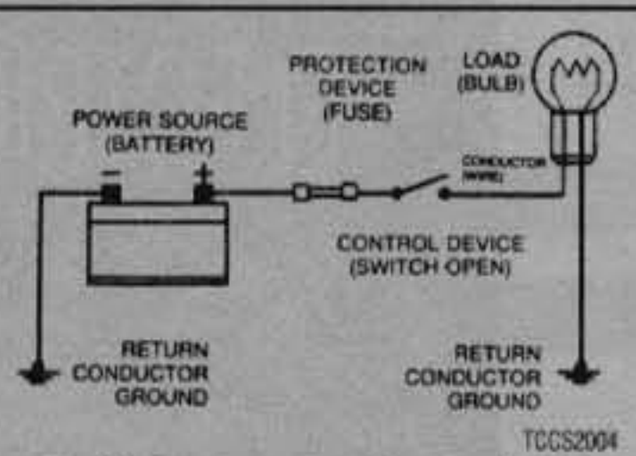

Fig. 1 This example illustrates a simple circuit. When the switch is closed, power from the positive (+) battery terminal flows through the fuse and the switch, and then to the light bulb. The light illuminates and the circuit is completed through the ground wire back to the negative (-) battery terminal. In reality, the two ground points shown in the illustration are attached to the metal frame of the vehicle, which completes the circuit back to the battery

HOW DOES ELECTRICITY WORK: THE WATER ANALOGY

Electricity is the flow of electrons—the subatomic particles that constitute the outer shell of an atom. Electrons spin in an orbit around the center core of an atom. The center core is comprised of protons (positive charge) and neutrons (neutral charge). Electrons have a negative charge and balance out the positive charge of the protons. When an outside force causes the number of electrons to unbalance the charge of the protons, the electrons will split off the atom and look for another atom to balance out. If this imbalance is kept up, electrons will continue to move and an electrical flow will exist.

Many people have been taught electrical theory using an analogy with water. In a comparison with water flowing through a pipe, the electrons would be the water and the wire is the pipe.

The flow of electricity can be measured much like the flow of water through a pipe. The unit of measurement used is amperes, frequently abbreviated as amps (a). You can compare amperage to the volume of water flowing through a pipe. When connected to a circuit, an ammeter will measure the actual amount of current flowing through the circuit. When relatively few electrons flow through a circuit, the amperage is low. When many electrons flow, the amperage is high.

Water pressure is measured in units such as pounds per square inch (psi); The electrical pressure is measured in units called volts (v). When a voltmeter is connected to a circuit, it is measuring the electrical pressure.

The actual flow of electricity depends not only on voltage and amperage, b also on the resistance of the circuit. The higher the resistance, the higher the force necessary to push the current through the circuit. The standard unit for measuring resistance is an ohm. Resistance in a circuit varies depending on t amount and type of components used in the circuit. The main factors which determine resistance are:

- Material—some materials have more resistance than others. Those with high resistance are said to be insulators. Rubber materials (or rubber-like plas tics) are some of the most common insulators used in vehicles as they have a very high resistance to electricity. Very low resistance materials are said to be conductors. Copper wire is among the best conductors. Silver is actually a superior conductor to copper and is used in some relay contacts, but its high cost prohibits its use as common wiring. Most automotive wiring is made of copper.
- Size—the larger the wire size being used, the less resistance the wire w have. This is why components which use large amounts of electricity usually have large wires supplying current to them.
- Length—for a given thickness of wire, the longer the wire, the greater th resistance. The shorter the wire, the less the resistance. When determining the proper wire for a circuit, both size and length must be considered to design a circuit that can handle the current needs of the component.
- Temperature—with many materials, the higher the temperature, the great the resistance (positive temperature coefficient). Some materials exhibit the opposite trait of lower resistance with higher temperatures (negative temperatur coefficient). These principles are used in many of the sensors on the engine.

OHM'S LAW

There is a direct relationship between current, voltage and resistance. The relationship between current, voltage and resistance can be summed up by a statement known as Ohm's law.

Voltage (E) is equal to amperage (I) times resistance (R): E=I x R

Other forms of the formula are R=E/I and I=E/R

In each of these formulas, E is the voltage in volts, I is the current in amps and R is the resistance in ohms. The basic point to remember is that as the resistance of a circuit goes up, the amount of current that flows in the circuit will go down, if voltage remains the same.

The amount of work that the electricity can perform is expressed as power. The unit of power is the watt (w). The relationship between power, voltage and current is expressed as:

Power (w) is equal to amperage (I) times voltage (E): W=I x E

This is only true for direct current (DC) circuits; The alternating current formula is a tad different, but since the electrical circuits in most vehicles are DC type, we need not get into AC circuit theory.

Electrical Components

POWER SOURCE

Power is supplied to the vehicle by two devices: The battery and the alterna tor. The battery supplies electrical power during starting or during periods whe the current demand of the vehicle's electrical system exceeds the output capac of the alternator. The alternator supplies electrical current when the engine is running. Just not does the alternator supply the current needs of the vehicle, b it recharges the battery.

The Battery

In most modern vehicles, the battery is a lead/acid electrochemical device consisting of six 2 volt subsections (cells) connected in series, so that the uni is capable of producing approximately 12 volts of electrical pressure. Each sul section consists of a series of positive and negative plates held a short distanc apart in a solution of sulfuric acid and water.

The two types of plates are of dissimilar metals. This sets up a chemical reaction, and it is this reaction which produces current flow from the battery when its positive and negative terminals are connected to an electrical load . The power removed from the battery is replaced by the alternator, restoring the battery to its original chemical state.

The Alternator

On some vehicles there isn't an alternator, but a generator. The difference is that an alternator supplies alternating current which is then changed to direct current for use on the vehicle, while a generator produces direct current. Alternators tend to be more efficient and that is why they are used.

Alternators and generators are devices that consist of coils of wires wound together making big electromagnets. One group of coils spins within another set and the interaction of the magnetic fields causes a current to flow. This current is then drawn off the coils and fed into the vehicles electrical system.

GROUND

Two types of grounds are used in automotive electric circuits. Direct ground components are grounded to the frame through their mounting points. All other components use some sort of ground wire which is attached to the frame or chassis of the vehicle. The electrical current runs through the chassis of the vehicle and returns to the battery through the ground (-) cable; if you look, you'll see that the battery ground cable connects between the battery and the frame or chassis of the vehicle.

➡It should be noted that a good percentage of electrical problems can be traced to bad grounds.

PROTECTIVE DEVICES

▸ See Figure 2

It is possible for large surges of current to pass through the electrical system of your vehicle. If this surge of current were to reach the load in the circuit, the surge could burn it out or severely damage it. It can also overload the wiring, causing the harness to get hot and melt the insulation. To prevent this, fuses, circuit breakers and/or fusible links are connected into the supply wires of the electrical system. These items are nothing more than a built-in weak spot in the system. When an abnormal amount of current flows through the system, these protective devices work as follows to protect the circuit:

- Fuse—when an excessive electrical current passes through a fuse, the fuse "blows" (the conductor melts) and opens the circuit, preventing the passage of current.
- Circuit Breaker—a circuit breaker is basically a self-repairing fuse. It will open the circuit in the same fashion as a fuse, but when the surge subsides, the circuit breaker can be reset and does not need replacement.
- Fusible Link—a fusible link (fuse link or main link) is a short length of special, high temperature insulated wire that acts as a fuse. When an excessive electrical current passes through a fusible link, the thin gauge wire inside the link melts, creating an intentional open to protect the circuit. To repair the circuit, the link must be replaced. Some newer type fusible links are housed in plug-in modules, which are simply replaced like a fuse, while older type fusible links must be cut and spliced if they melt. Since this link is very early in the electrical path, it's the first place to look if nothing on the vehicle works, yet the battery seems to be charged and is properly connected.

CAUTION

Always replace fuses, circuit breakers and fusible links with identically rated components. Under no circumstances should a component of higher or lower amperage rating be substituted.

SWITCHES & RELAYS

▸ See Figures 3 and 4

Switches are used in electrical circuits to control the passage of current. The most common use is to open and close circuits between the battery and the various electric devices in the system. Switches are rated according to the amount of amperage they can handle. If a sufficient amperage rated switch is not used in a circuit, the switch could overload and cause damage.

Some electrical components which require a large amount of current to operate use a special switch called a relay. Since these circuits carry a large amount of current, the thickness of the wire in the circuit is also greater. If this large wire were connected from the load to the control switch, the switch would have to carry the high amperage load and the fairing or dash would be twice as large to accommodate the increased size of the wiring harness. To prevent these problems, a relay is used.

Relays are composed of a coil and a set of contacts. When the coil has a current passed though it, a magnetic field is formed and this field causes the contacts to move together, completing the circuit. Most relays are normally open, preventing current from passing through the circuit, but they can take any electrical form depending on the job they are intended to do. Relays can be considered "remote control switches." They allow a smaller current to operate devices that require higher amperages. When a small current operates the coil, a larger current is allowed to pass by the contacts. Some common circuits which may use relays are the horn, headlights, starter, electric fuel pump and other high draw ciruits.

LOAD

Every electrical circuit must include a "load" (something to use the electricity coming from the source). Without this load, the battery would attempt to deliver its entire power supply from one pole to another. This is called a "short circuit." All this electricity would take a short cut to ground and cause a great amount of damage to other components in the circuit by developing a tremendous amount of heat. This condition could develop sufficient heat to melt the insulation on all the surrounding wires and reduce a multiple wire cable to a lump of plastic and copper.

WIRING & HARNESSES

The average vehicle contains meters and meters of wiring, with hundreds of individual connections. To protect the many wires from damage and to keep them from becoming a confusing tangle, they are organized into bundles,

TCCA6P01

Fig. 2 Most vehicles use one or more fuse panels. This one is located on the driver's side kick panel

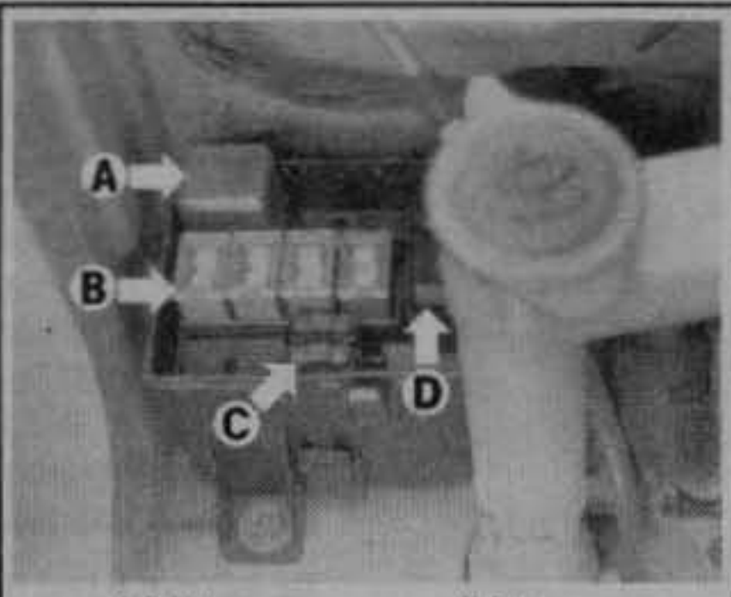

A. Relay
B. Fusible link
C. Fuse
D. Flasher

TCCA6P02

Fig. 3 The underhood fuse and relay panel usually contains fuses, relays, flashers and fusible links

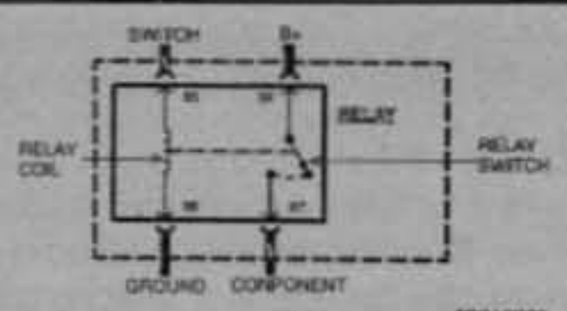

TCCA6G02

Fig. 4 Relays are composed of a coil and a switch. These two components are linked together so that when one operates, the other operates at the same time. The large wires in the circuit are connected from the battery to one side of the relay switch (B+) and from the opposite side of the relay switch to the load (component). Smaller wires are connected from the relay coil to the control switch for the circuit and from the opposite side of the relay coil to ground

enclosed in plastic or taped together and called wiring harnesses. Different harnesses serve different parts of the vehicle. Individual wires are color coded to help trace them through a harness where sections are hidden from view.

Automotive wiring or circuit conductors can be either single strand wire, multi-strand wire or printed circuitry. Single strand wire has a solid metal core and is usually used inside such components as alternators, motors, relays and other devices. Multi-strand wire has a core made of many small strands of wire twisted together into a single conductor. Most of the wiring in an automotive electrical system is made up of multi-strand wire, either as a single conductor or grouped together in a harness. All wiring is color coded on the insulator, either as a solid color or as a colored wire with an identification stripe. A printed circuit is a thin film of copper or other conductor that is printed on an insulator backing. Occasionally, a printed circuit is sandwiched between two sheets of plastic for more protection and flexibility. A complete printed circuit, consisting of conductors, insulating material and connectors for lamps or other components is called a printed circuit board. Printed circuitry is used in place of individual wires or harnesses in places where space is limited, such as behind instrument panels.

Since automotive electrical systems are very sensitive to changes in resistance, the selection of properly sized wires is critical when systems are repaired. A loose or corroded connection or a replacement wire that is too small for the circuit will add extra resistance and an additional voltage drop to the circuit.

The wire gauge number is an expression of the cross-section area of the conductor. Vehicles from countries that use the metric system will typically describe the wire size as its cross-sectional area in square millimeters. In this method, the larger the wire, the greater the number. Another common system for expressing wire size is the American Wire Gauge (AWG) system. As gauge number increases, area decreases and the wire becomes smaller. An 18 gauge wire is smaller than a 4 gauge wire. A wire with a higher gauge number will carry less current than a wire with a lower gauge number. Gauge wire size refers to the size of the strands of the conductor, not the size of the complete wire with insulator. It is possible, therefore, to have two wires of the same gauge with different diameters because one may have thicker insulation than the other.

It is essential to understand how a circuit works before trying to figure out why it doesn't. An electrical schematic shows the electrical current paths when a circuit is operating properly. Schematics break the entire electrical system down into individual circuits. In a schematic, usually no attempt is made to represent wiring and components as they physically appear on the vehicle; switches and other components are shown as simply as possible. Face views of harness connectors show the cavity or terminal locations in all multi-pin connectors to help locate test points.

CONNECTORS

See Figures 5 and 6

Three types of connectors are commonly used in automotive applications—weatherproof, molded and hard shell.

- Weatherproof—these connectors are most commonly used where the connector is exposed to the elements. Terminals are protected against moisture and dirt by sealing rings which provide a weathertight seal. All repairs require the use of a special terminal and the tool required to service it. Unlike standard blade type terminals, these weatherproof terminals cannot be straightened once they are bent. Make certain that the connectors are properly seated and all of the sealing rings are in place when connecting leads.
- Molded—these connectors require complete replacement of the connector if found to be defective. This means splicing a new connector assembly into the harness. All splices should be soldered to insure proper contact. Use care when probing the connections or replacing terminals in them, as it is possible to create a short circuit between opposite terminals. If this happens to the wrong terminal pair, it is possible to damage certain components. Always use jumper wires between connectors for circuit checking and NEVER probe through weatherproof seals.
- Hard Shell—unlike molded connectors, the terminal contacts in hard-shell connectors can be replaced. Replacement usually involves the use of a special terminal removal tool that depresses the locking tangs (barbs) on the connector terminal and allows the connector to be removed from the rear of the shell. The connector shell should be replaced if it shows any evidence of burning, melting, cracks, or breaks. Replace individual terminals that are burnt, corroded, distorted or loose.

Test Equipment

Pinpointing the exact cause of trouble in an electrical circuit is most times accomplished by the use of special test equipment. The following describes different types of commonly used test equipment and briefly explains how to use them in diagnosis. In addition to the information covered below, the tool manufacturer's instructions booklet (provided with the tester) should be read and clearly understood before attempting any test procedures.

JUMPER WIRES

CAUTION

Never use jumper wires made from a thinner gauge wire than the circuit being tested. If the jumper wire is of too small a gauge, it may overheat and possibly melt. Never use jumpers to bypass high resistance loads in a circuit. Bypassing resistances, in effect, creates a short circuit. This may, in turn, cause damage and fire. Jumper wires should only be used to bypass lengths of wire or to simulate switches.

Jumper wires are simple, yet extremely valuable, pieces of test equipment. They are basically test wires which are used to bypass sections of a circuit. Although jumper wires can be purchased, they are usually fabricated from lengths of standard automotive wire and whatever type of connector (alligator clip, spade connector or pin connector) that is required for the particular application being tested. In cramped, hard-to-reach areas, it is advisable to have insulated boots over the jumper wire terminals in order to prevent accidental grounding. It is also advisable to include a standard automotive fuse in any jumper wire. This is commonly referred to as a "fused jumper". By inserting an in-line fuse holder between a set of test leads, a fused jumper wire can be used for bypassing open circuits. Use a 5 amp fuse to provide protection against voltage spikes.

Jumper wires are used primarily to locate open electrical circuits, on either the ground (-) side of the circuit or on the power (+) side. If an electrical component fails to operate, connect the jumper wire between the component and a good ground. If the component operates only with the jumper installed, the ground circuit is open. If the ground circuit is good, but the component does not operate, the circuit between the power feed and component may be open. By moving the jumper wire successively back from the component toward the power source, you can isolate the area of the circuit where the open is located. When the component stops functioning, or the power is cut off, the open is in the segment of wire between the jumper and the point previously tested.

You can sometimes connect the jumper wire directly from the battery to the "hot" terminal of the component, but first make sure the component uses 12 volts in operation. Some electrical components, such as fuel injectors or sensors, are designed to operate on about 4 to 5 volts, and running 12 volts directly to these components will cause damage.

TEST LIGHTS

See Figure 7

The test light is used to check circuits and components while electrical current is flowing through them. It is used for voltage and ground tests. To use a 12 volt test light, connect the ground clip to a good ground and probe wherever necessary with the pick. The test light will illuminate when voltage is detected. This does not necessarily mean that 12 volts (or any particular amount of voltage) is present; it only means that some voltage is present. It is advisable before using the test light to touch its ground clip and probe across the battery posts or terminals to make sure the light is operating properly.

WARNING

Do not use a test light to probe electronic ignition, spark plug or coil wires. Never use a pick-type test light to probe wiring on computer controlled systems unless specifically instructed to do so. Any wire insulation that is pierced by the test light probe should be taped and sealed with silicone after testing.

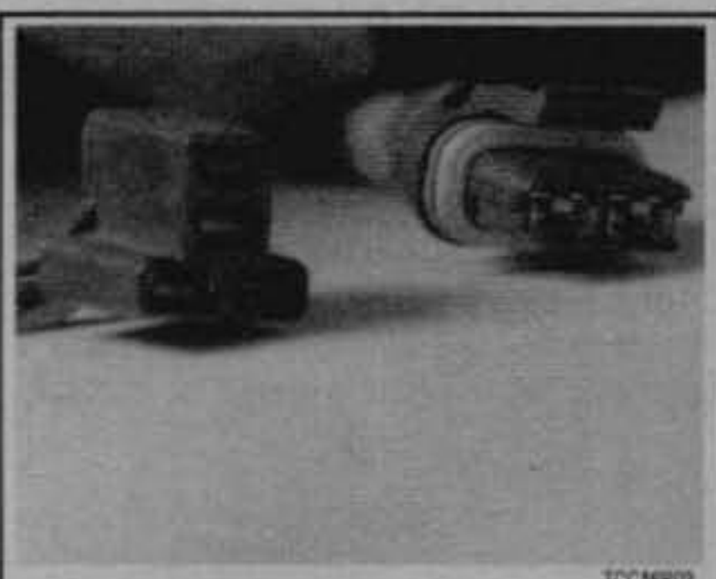

TCCA6P03

Fig. 5 Hard shell (left) and weatherproof (right) connectors have replaceable terminals

TCCA6P04

Fig. 6 Weatherproof connectors are most commonly used in the engine compartment or where the connector is exposed to the elements

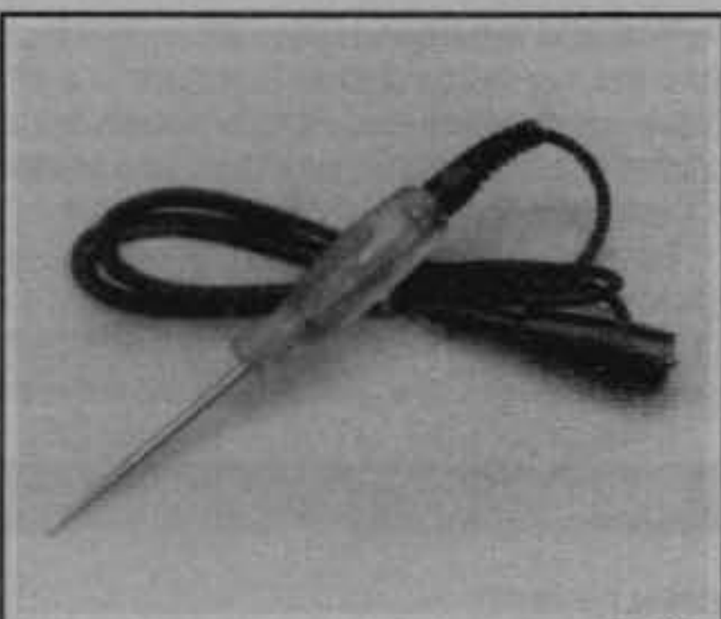

TCCS2006

Fig. 7 A 12 volt test light is used to detect the presence of voltage in a circuit

Like the jumper wire, the 12 volt test light is used to isolate opens in circuits. But, whereas the jumper wire is used to bypass the open to operate the load, the 12 volt test light is used to locate the presence of voltage in a circuit. If the test light illuminates, there is power up to that point in the circuit; if the test light does not illuminate, there is an open circuit (no power). Move the test light in successive steps back toward the power source until the light in the handle illuminates. The open is between the probe and a point which was previously probed.

The self-powered test light is similar in design to the 12 volt test light, but contains a 1.5 volt penlight battery in the handle. It is most often used in place of a multimeter to check for open or short circuits when power is isolated from the circuit (continuity test).

The battery in a self-powered test light does not provide much current. A weak battery may not provide enough power to illuminate the test light even when a complete circuit is made (especially if there is high resistance in the circuit). Always make sure that the test battery is strong. To check the battery, briefly touch the ground clip to the probe; if the light glows brightly, the battery is strong enough for testing.

➡A self-powered test light should not be used on any computer controlled system or component. The small amount of electricity transmitted by the test light is enough to damage many electronic automotive components.

MULTIMETERS

Multimeters are an extremely useful tool for troubleshooting electrical problems. They can be purchased in either analog or digital form and have a price range to suit any budget. A multimeter is a voltmeter, ammeter and ohmmeter (along with other features) combined into one instrument. It is often used when testing solid state circuits because of its high input impedance (usually 10 megaohms or more). A brief description of the multimeter main test functions follows:

- Voltmeter—the voltmeter is used to measure voltage at any point in a circuit, or to measure the voltage drop across any part of a circuit. Voltmeters usually have various scales and a selector switch to allow the reading of different voltage ranges. The voltmeter has a positive and a negative lead. To avoid damage to the meter, always connect the negative lead to the negative (-) side of the circuit (to ground or nearest the ground side of the circuit) and connect the positive lead to the positive (+) side of the circuit (to the power source or the nearest power source). Note that the negative voltmeter lead will always be black and that the positive voltmeter will always be some color other than black (usually red).
- Ohmmeter—the ohmmeter is designed to read resistance (measured in ohms) in a circuit or component. Most ohmmeters will have a selector switch which permits the measurement of different ranges of resistance (usually the selector switch allows the multiplication of the meter reading by 10, 100, 1,000 and 10,000). Some ohmmeters are "auto-ranging" which means the meter itself will determine which scale to use. Since the meters are powered by an internal battery, the ohmmeter can be used like a self-powered test light. When the ohmmeter is connected, current from the ohmmeter flows through the circuit or component being tested. Since the ohmmeter's internal resistance and voltage are known values, the amount of current flow through the meter depends on the resistance of the circuit or component being tested. The ohmmeter can also be used to perform a continuity test for suspected open circuits. In using the meter for making continuity checks, do not be concerned with the actual resistance readings. Zero resistance, or any ohm reading, indicates continuity in the circuit. Infinite resistance indicates an opening in the circuit. A high resistance reading where there should be none indicates a problem in the circuit. Checks for short circuits are made in the same manner as checks for open circuits, except that the circuit must be isolated from both power and normal ground. Infinite resistance indicates no continuity, while zero resistance indicates a dead short.

WARNING

Never use an ohmmeter to check the resistance of a component or wire while there is voltage applied to the circuit.

- Ammeter—an ammeter measures the amount of current flowing through a circuit in units called amperes or amps. At normal operating voltage, most circuits have a characteristic amount of amperes, called "current draw" which can be measured using an ammeter. By referring to a specified current draw rating, then measuring the amperes and comparing the two values, one can determine what is happening within the circuit to aid in diagnosis. An open circuit, for example, will not allow any current to flow, so the ammeter reading will be zero. A damaged component or circuit will have an increased current draw, so the reading will be high. The ammeter is always connected in series with the circuit being tested. All of the current that normally flows through the circuit must also flow through the ammeter; if there is any other path for the current to follow, the ammeter reading will not be accurate. The ammeter itself has very little resistance to current flow and, therefore, will not affect the circuit, but it will measure current draw only when the circuit is closed and electricity is flowing. Excessive current draw can blow fuses and drain the battery, while a reduced current draw can cause motors to run slowly, lights to dim and other components to not operate properly.

Troubleshooting Electrical Systems

When diagnosing a specific problem, organized troubleshooting is a must. The complexity of a modern automotive vehicle demands that you approach any problem in a logical, organized manner. There are certain troubleshooting techniques, however, which are standard:

- Establish when the problem occurs. Does the problem appear only under certain conditions? Were there any noises, odors or other unusual symptoms? Isolate the problem area. To do this, make some simple tests and observations, then eliminate the systems that are working properly. Check for obvious problems, such as broken wires and loose or dirty connections. Always check the obvious before assuming something complicated is the cause.
- Test for problems systematically to determine the cause once the problem area is isolated. Are all the components functioning properly? Is there power going to electrical switches and motors. Performing careful, systematic checks will often turn up most causes on the first inspection, without wasting time checking components that have little or no relationship to the problem.
- Test all repairs after the work is done to make sure that the problem is fixed. Some causes can be traced to more than one component, so a careful

verification of repair work is important in order to pick up additional malfunctions that may cause a problem to reappear or a different problem to arise. A blown fuse, for example, is a simple problem that may require more than another fuse to repair. If you don't look for a problem that caused a fuse to blow, a shorted wire (for example) may go undetected.

Experience has shown that most problems tend to be the result of a fairly simple and obvious cause, such as loose or corroded connectors, bad grounds or damaged wire insulation which causes a short. This makes careful visual inspection of components during testing essential to quick and accurate troubleshooting.

Testing

OPEN CIRCUITS

See Figure 8

This test already assumes the existence of an open in the circuit and it is used to help locate the open portion.

1. Isolate the circuit from power and ground.
2. Connect the self-powered test light or ohmmeter ground clip to the ground side of the circuit and probe sections of the circuit sequentially.
3. If the light is out or there is infinite resistance, the open is between the probe and the circuit ground.
4. If the light is on or the meter shows continuity, the open is between the probe and the end of the circuit toward the power source.

SHORT CIRCUITS

➡Never use a self-powered test light to perform checks for opens or shorts when power is applied to the circuit under test. The test light can be damaged by outside power.

1. Isolate the circuit from power and ground.
2. Connect the self-powered test light or ohmmeter ground clip to a good ground and probe any easy-to-reach point in the circuit.
3. If the light comes on or there is continuity, there is a short somewhere in the circuit.
4. To isolate the short, probe a test point at either end of the isolated circuit (the light should be on or the meter should indicate continuity).
5. Leave the test light probe engaged and sequentially open connectors or switches, remove parts, etc. until the light goes out or continuity is broken.
6. When the light goes out, the short is between the last two circuit components which were opened.

VOLTAGE

This test determines voltage available from the battery and should be the first step in any electrical troubleshooting procedure after visual inspection. Many electrical problems, especially on computer controlled systems, can be caused by a low state of charge in the battery. Excessive corrosion at the battery cable terminals can cause poor contact that will prevent proper charging and full battery current flow.

1. Set the voltmeter selector switch to the 20V position.
2. Connect the multimeter negative lead to the battery's negative (-) post or terminal and the positive lead to the battery's positive (+) post or terminal.
3. Turn the ignition switch **ON** to provide a load.
4. A well charged battery should register over 12 volts. If the meter reads below 11.5 volts, the battery power may be insufficient to operate the electrical system properly.

VOLTAGE DROP

See Figure 9

When current flows through a load, the voltage beyond the load drops. This voltage drop is due to the resistance created by the load and also by small resistances created by corrosion at the connectors and damaged insulation on the wires. The maximum allowable voltage drop under load is critical, especially if there is more than one load in the circuit, since all voltage drops are cumulative.

1. Set the voltmeter selector switch to the 20 volt position.
2. Connect the multimeter negative lead to a good ground.
3. Operate the circuit and check the voltage prior to the first component (load).
4. There should be little or no voltage drop in the circuit prior to the first component. If a voltage drop exists, the wire or connectors in the circuit are suspect.
5. While operating the first component in the circuit, probe the ground side of the component with the positive meter lead and observe the voltage readings. A small voltage drop should be noticed. This voltage drop is caused by the resistance of the component.
6. Repeat the test for each component (load) down the circuit.
7. If a large voltage drop is noticed, the preceding component, wire or connector is suspect.

RESISTANCE

See Figures 10 and 11

WARNING

Never use an ohmmeter with power applied to the circuit. The ohmmeter is designed to operate on its own power supply. The normal 12 volt electrical system voltage could damage the meter!

1. Isolate the circuit from the vehicle's power source.
2. Ensure that the ignition key is **OFF** when disconnecting any components or the battery.
3. Where necessary, also isolate at least one side of the circuit to be checked, in order to avoid reading parallel resistances. Parallel circuit resis-

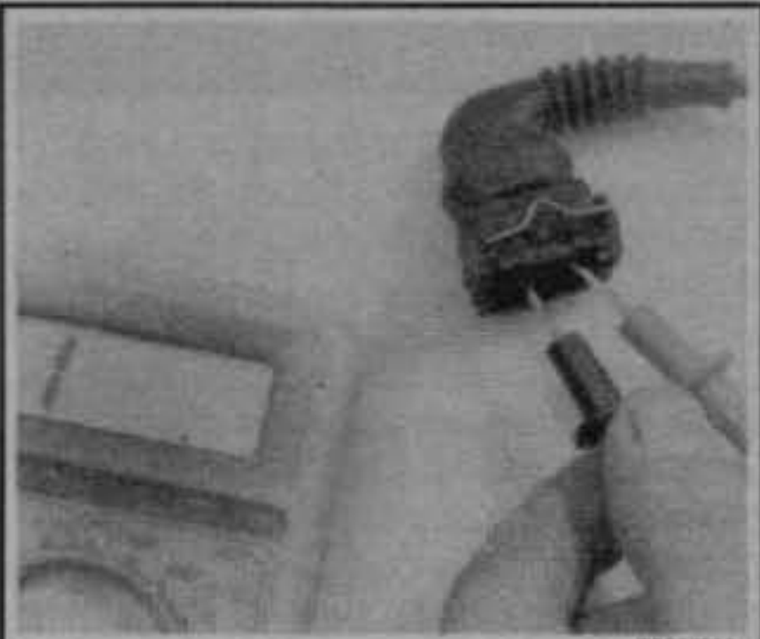

TCCA6P10

Fig. 8 The infinite reading on this multimeter indicates that the circuit is open

TCCA6P07

Fig. 9 This voltage drop test revealed high resistance (low voltage) in the circuit

TCCA6P08

Fig. 10 Checking the resistance of a coolant temperature sensor with an ohmmeter. Reading is 1.04 kilohms

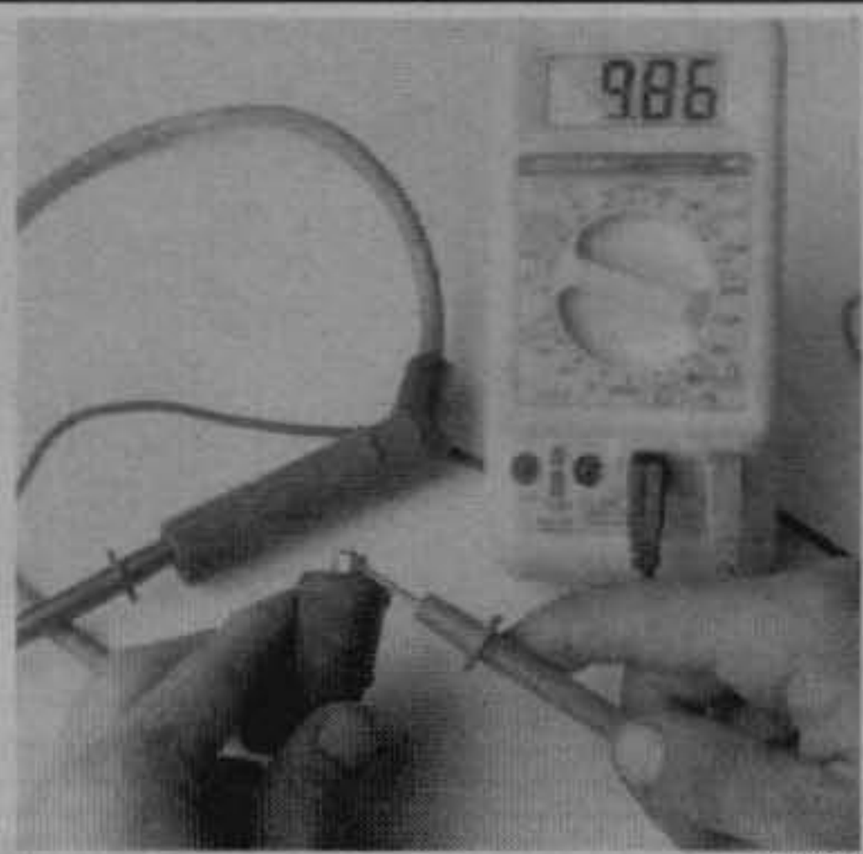

Fig. 11 Spark plug wires can be checked for excessive resistance using an ohmmeter

tances will always give a lower reading than the actual resistance of either of the branches.

4. Connect the meter leads to both sides of the circuit (wire or component) and read the actual measured ohms on the meter scale. Make sure the selector switch is set to the proper ohm scale for the circuit being tested, to avoid misreading the ohmmeter test value.

Wire and Connector Repair

Almost anyone can replace damaged wires, as long as the proper tools and parts are available. Wire and terminals are available to fit almost any need. Even the specialized weatherproof, molded and hard shell connectors are now available from aftermarket suppliers.

Be sure the ends of all the wires are fitted with the proper terminal hardware and connectors. Wrapping a wire around a stud is never a permanent solution and will only cause trouble later. Replace wires one at a time to avoid confusion. Always route wires exactly the same as the factory.

➡If connector repair is necessary, only attempt it if you have the proper tools. Weatherproof and hard shell connectors require special tools to release the pins inside the connector. Attempting to repair these connectors with conventional hand tools will damage them.

HEATING AND AIR CONDITIONING

CAUTION

Please refer to Section 1 of this manual before discharging/recovering the A/C system or disconnecting air conditioning lines. Damage to the air conditioning system or personal injury could result. Consult your local laws concerning refrigerant discharge and recycling. In many areas it may be illegal for anyone but a certified technician to service the A/C system. Always use an approved recovery station when discharging the air conditioning.

Heater Housing Assembly

REMOVAL & INSTALLATION

Without Air Conditioning

▸ See Figures 12, 13 and 14

1. Drain about two quarts of coolant.

CAUTION

When draining coolant, keep in mind that cats and dogs are attracted by ethylene glycol antifreeze, and are quite likely to drink any that is left in an uncovered container or in puddles on the ground. This will prove fatal in sufficient quantity. Always drain the coolant into a sealable container. Coolant should be reused unless it is contaminated or several years old.

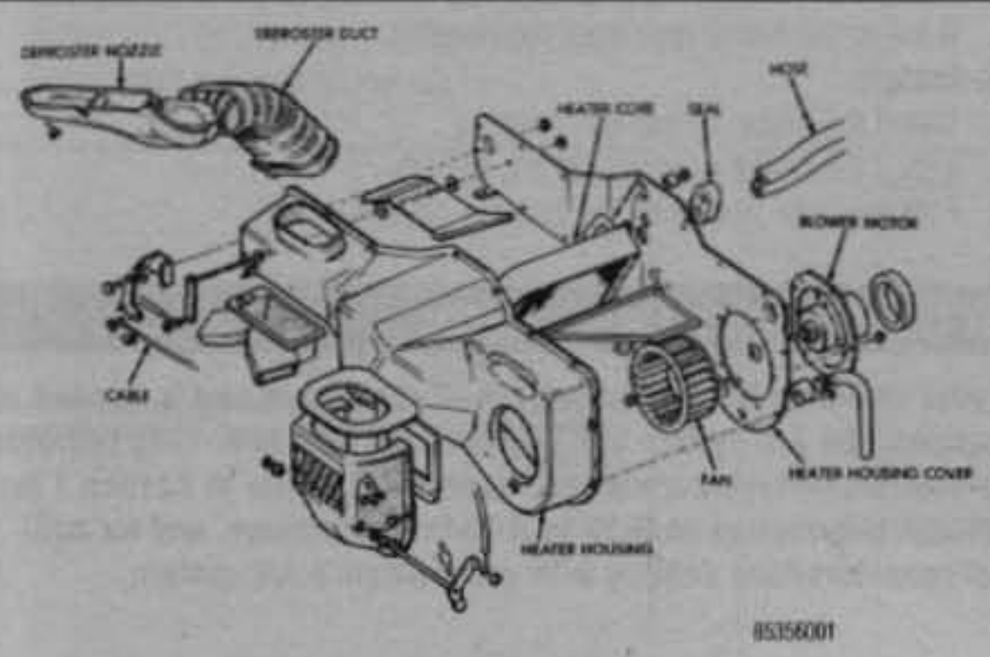

Fig. 12 Heating system components

2. Disconnect the heater hoses at the engine side of the firewall.
3. Detach the heater control cables.
4. Disconnect the motor wiring.
5. Detach the water drain hose and the defroster hose.
6. Remove the nuts from the studs in the engine compartment.
7. Tilt the heater housing assembly down and pull it back toward the inside of the vehicle.
8. Remove the attaching screws and the blower motor.

To install:

9. Position the heater housing assembly on the dash panel.
10. Make sure that the seals around the core tubes and blower motor are in place.
11. Install the attaching nuts on the studs being careful not to over tighten.
12. Attach the defroster duct to the housing.
13. Connect the blower motor wiring.
14. Connect the vent door control cables.
15. Connect the heater hoses.
16. Fill and bleed the cooling system.

Blower Motor

REMOVAL & INSTALLATION

Without Air Conditioning

▸ See Figures 12, 15 and 16

The heater housing assembly must be removed in order to get access the blower motor.

1. Drain about two quarts of coolant.

CAUTION

When draining coolant, keep in mind that cats and dogs are attracted by ethylene glycol antifreeze, and are quite likely to drink any that is left in an uncovered container or in puddles on the ground. This will prove fatal in sufficient quantity. Always drain the coolant into a sealable container. Coolant should be reused unless it is contaminated or several years old.

2. Remove the heater housing assembly as outlined earlier in this section.
3. Remove the attaching screws and remove the blower motor.

Fig. 13 Remove the heater housing assembly from under the dash

Fig. 14 Make sure the seals are installed around the core tubes

Fig. 15 Remove the blower motor-to-heater housing cover screws

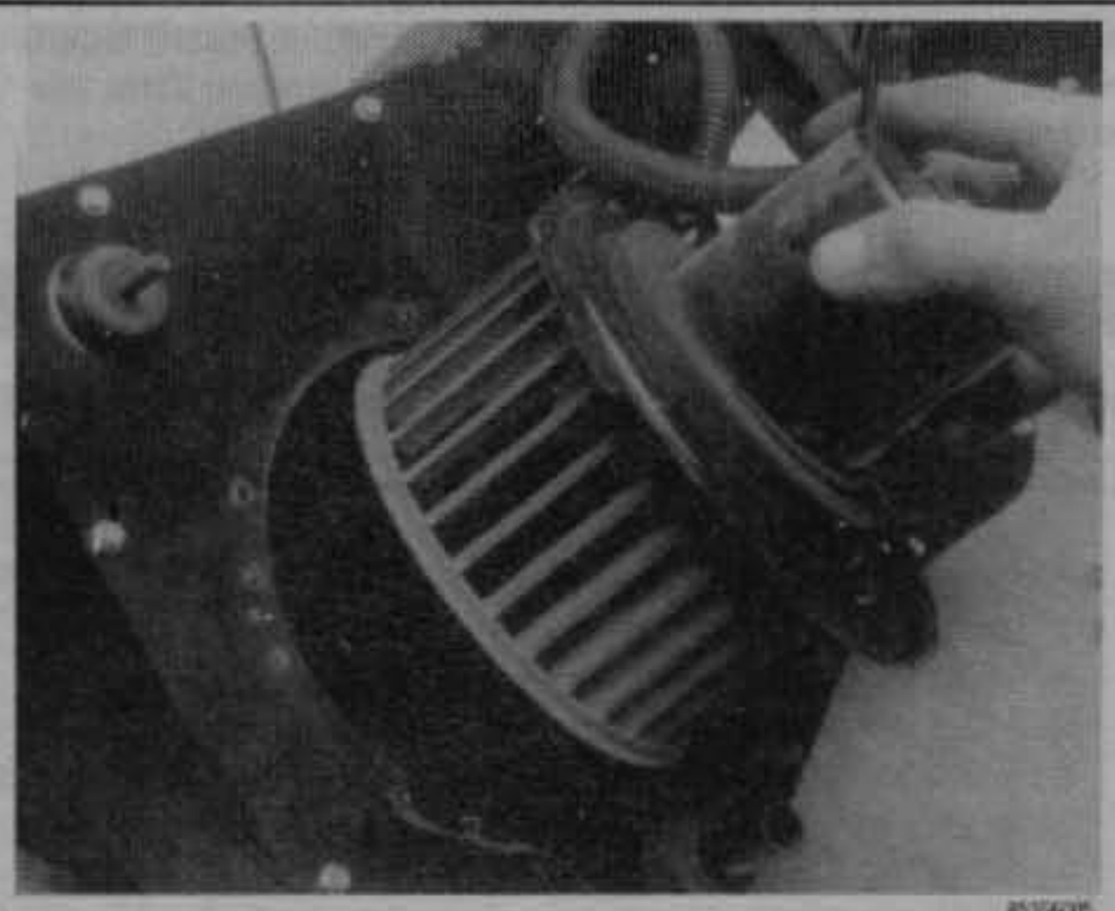

Fig. 16 After removing the retaining screws the blower motor can be separated from the heater housing

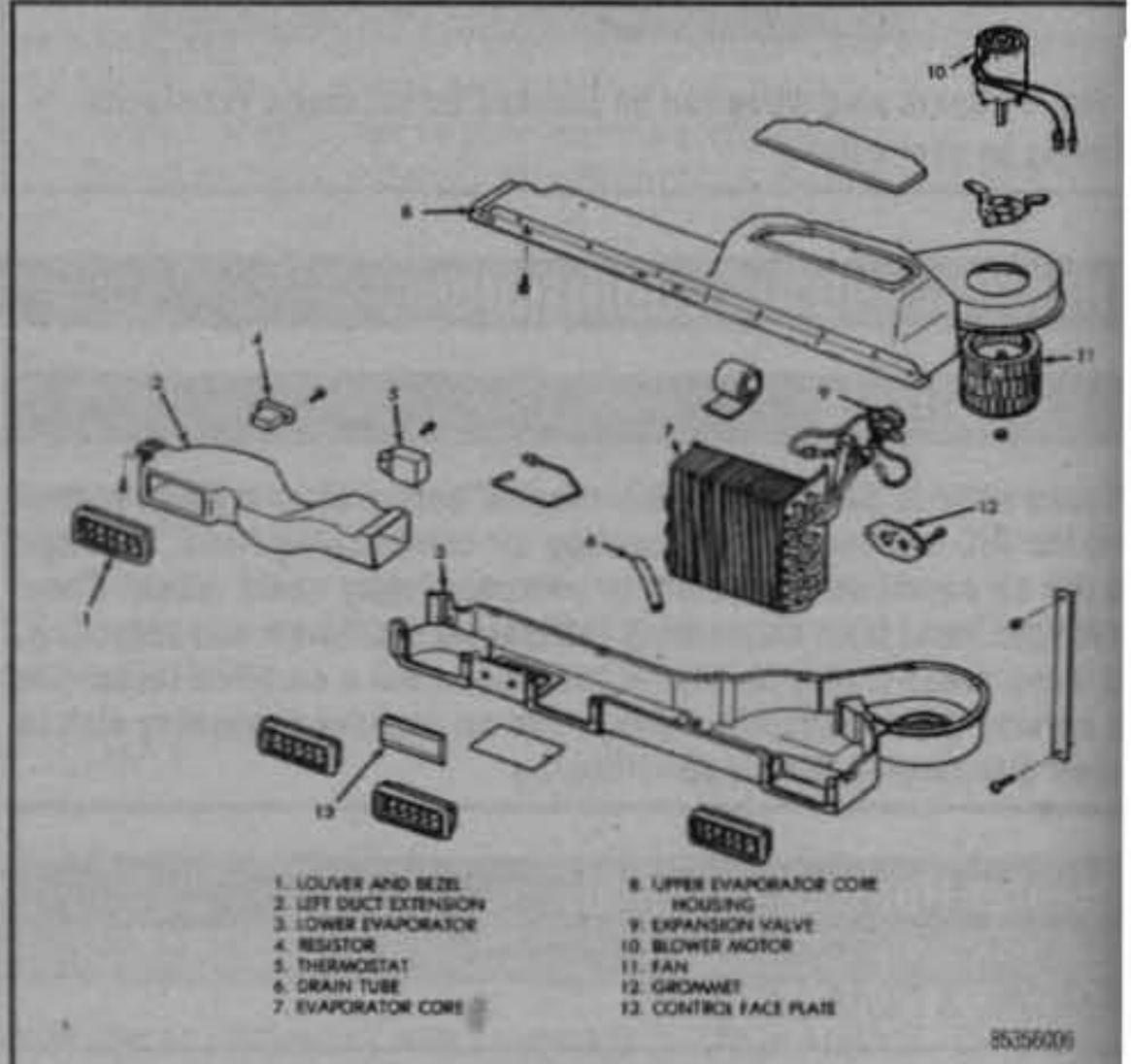

Fig. 17 Evaporative housing and components

To install:

4. Install the blower motor into the housing, then tighten the attaching screws and nuts.
5. Install the heater housing as outlined earlier.

With Air Conditioning

See Figure 17

It is not necessary to discharge the refrigerant system.

1. Remove the hose clamps and dash grommet retaining screws.
2. Remove the evaporator housing-to-instrument panel retaining screws and the housing mounting bracket screw.
3. Remove the blower mounting screws and remove the blower. Disconnect the wiring.
4. Installation is the reverse of removal.

Heater Core

REMOVAL & INSTALLATION

See Figures 12, 18, 19 and 20

The heater housing assembly must be removed in order to access the heater core.

1. Drain about two quarts of coolant.

CAUTION

When draining coolant, keep in mind that cats and dogs are attracted by ethylene glycol antifreeze, and are quite likely to drink any that is left in an uncovered container or in puddles on the ground. This will prove fatal in sufficient quantity. Always drain the coolant into a sealable container. Coolant should be reused unless it is contaminated or several years old.

2. Remove the heater housing assembly as outlined earlier in this section.
3. Remove the heater core from the housing.

To install:

4. Install the heater core to the housing.
5. Install the heater assembly to the vehicle.
6. Properly refill and bleed the cooling system.

Air Conditioning Compressor

If your vehicle's A/C system uses R-12 refrigerant and is in need of recharging, the A/C system can be converted over to R-134a refrigerant (less environmentally harmful and expensive). Refer to Section 1 for additional information on R-12 to R-134a conversions, and for additional considerations dealing with your vehicle's A/C system.

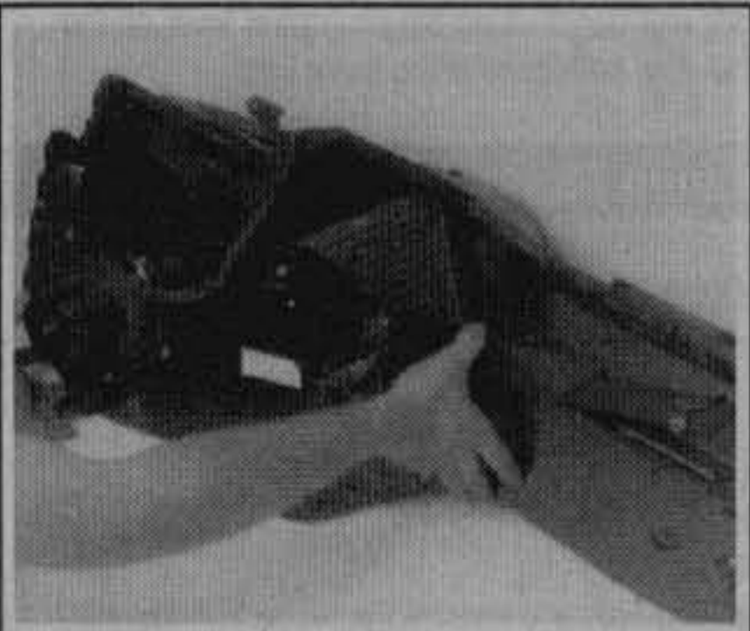

85356007

Fig. 18 Remove the heater housing cover from the housing—1992 Wrangler shown

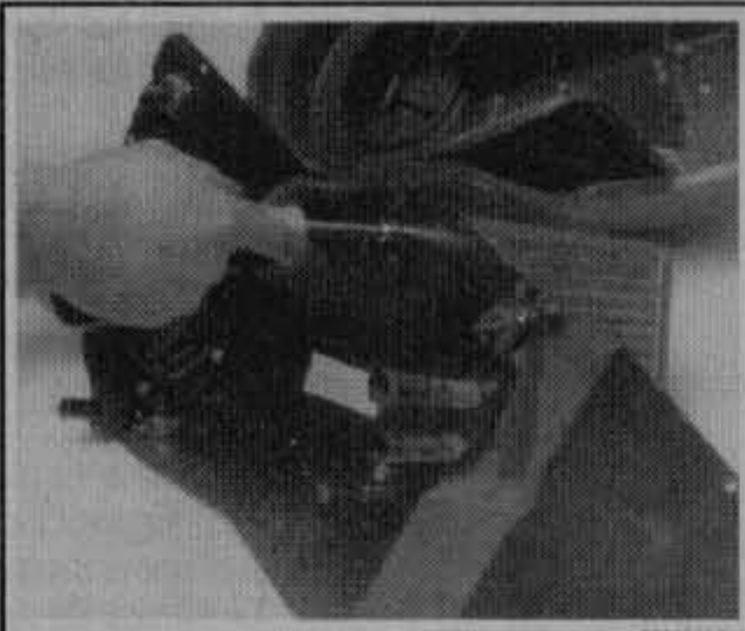

85356008

Fig. 19 Remove the heater core retaining screws

85356009

Fig. 20 After removing the retaining screws the heater core can be separated from the heater housing

ISOLATING THE COMPRESSOR

See Figure 21

It is not necessary to discharge the system for compressor removal. The compressor can be isolated from the rest of the system, eliminating the need for recharging.

1. Connect a manifold gauge set.
2. Close both gauge hand valves and mid-position (crack) both compressor service valves.
3. Start the engine and turn on the air conditioning.
4. Turn the compressor suction valve slowly clockwise towards the front-seated position. When the suction pressure drops to zero, stop the engine and turn off the air conditioning. Quickly front-seat the valve completely.
5. Front-seat the discharge service valve.
6. Loosen the oil level check plug to remove any internal pressure.

The compressor is now isolated and the service valves can now be removed.

REMOVAL & INSTALLATION

2.5L and 4.0L Engines

See Figure 22

1. Isolate the compressor, as previously described.
2. Disconnect the battery ground cable.
3. Remove the discharge and suction hoses from the compressor, then immediately cap all openings.
4. Loosen the alternator and remove the drive belt.
5. It may be necessary to remove the alternator from its brackets and set it out of the way.
6. Unbolt and remove the compressor.
7. For installation, install the compressor and alternator, connect the hoses, then install and tension the drive belt(s). Connect the compressor clutch wire. Open the valves.

4.2L Engine

1. Isolate the compressor, as previously described.
2. Disconnect the battery ground.
3. Remove the discharge and suction hoses from the compressor, then immediately cap all openings.
4. Loosen the alternator and remove the drive belts.
5. Remove the alternator from its brackets and set it out of the way.
6. Unbolt and remove the compressor.
7. For installation, install the compressor and alternator, connect the hoses, then install and tension the drive belt(s). Connect the compressor clutch wire. Open the valves.

Heater Control Valve

The heater control valve is spliced into the heater core hoses. It can be tested by attaching a hand vacuum pump to the valve to draw and release vacuum. If during this procedure the heating system functions properly, the valve is not defective. Check for vacuum leaks in the control panel or restrictions in the coolant system.

REMOVAL & INSTALLATION

Allow the vehicle to cool before performing this procedure.

1. Label and disconnect all heater hoses attached to the valve.
2. Disconnect the vacuum hose which controls the valve.
3. Remove the valve.
4. Installation is the reverse of removal.

Control Panel

REMOVAL & INSTALLATION

See Figure 23

1. Remove the instrument cluster bezel screws.
2. Remove the bezel.
3. Remove the control panel attaching screws.
4. Pull the panel toward you, then disconnect the cables, hoses and wires.
5. Installation is the reverse of removal.

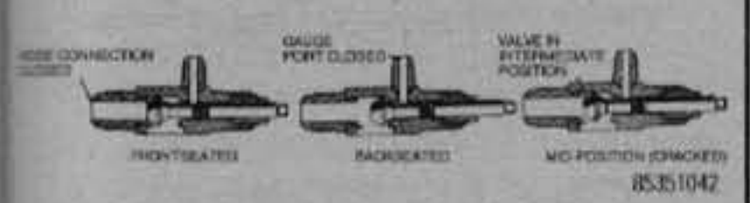

Fig. 21 Manual service valve positions

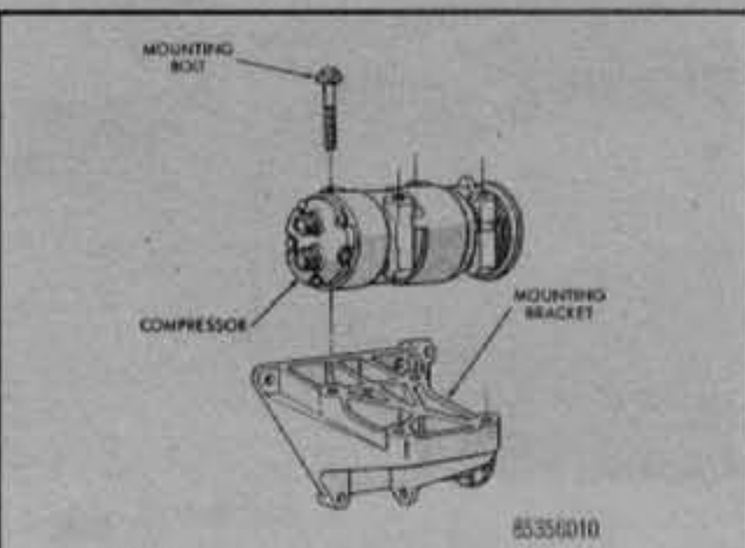

Fig. 22 Compressor and mounting bracket—1991–95 vehicles

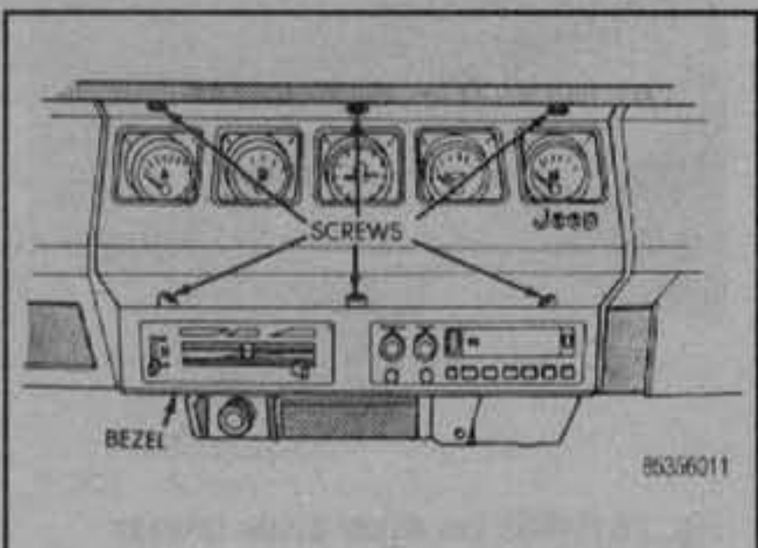

Fig. 23 Instrument cluster bezel retaining screws—1991–95 vehicles

Vent Door Control Cables

REMOVAL & INSTALLATION

See Figure 24

1. Disconnect the cable from the vent door.
2. Disconnect the cable from the heater control panel lever by pressing the plastic tabs together and lifting the cable upward.

To install:

➡The clip on the cable wire has two functions. It attaches the cable to the vent door and it is also a self adjusting mechanism. Because the left cable operates the right cable, the cables must be installed as outlined.

3. Connect the cables to the heater control.
4. Connect the right vent door cable. Do not connect the left vent door cable at this time.
5. Open and close the right vent door (one time) using the air control lever on the heater control panel.
6. Connect the left vent door cable.
7. Open and close the both vent doors using the air control lever on the heater control panel. Verify that they both open at the same time.

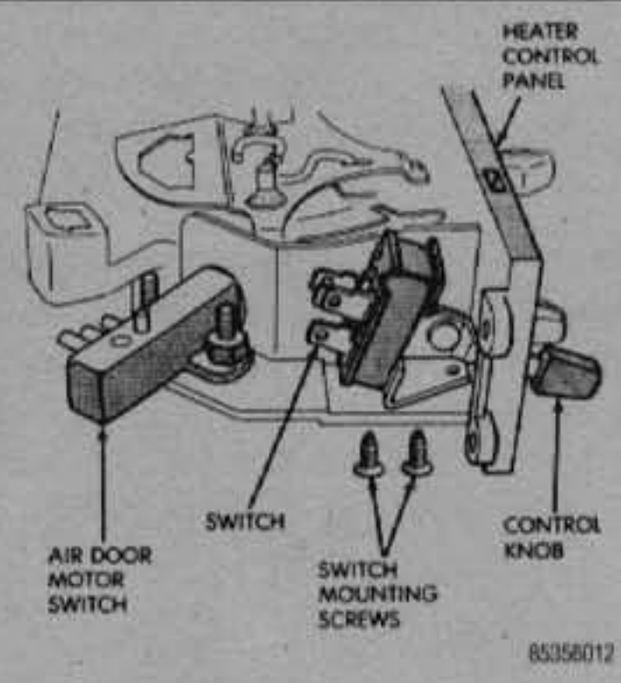

Fig. 24 Vent door control switches

Fresh Air Door Vacuum Motor

REMOVAL & INSTALLATION

See Figure 25

1. Remove the glove box and assist handle.
2. Disconnect the vacuum hose from the motor.
3. Remove the motor lever retaining clip.
4. Remove the motor attaching nuts and remove the motor from the fresh air duct.

To install:

5. Install the motor to the fresh air duct with attaching nuts.
6. Align the motor lever with the air door lever and install the retaining clip.
7. Connect the vacuum hose to the motor.
8. Install the glove box and assist handle.

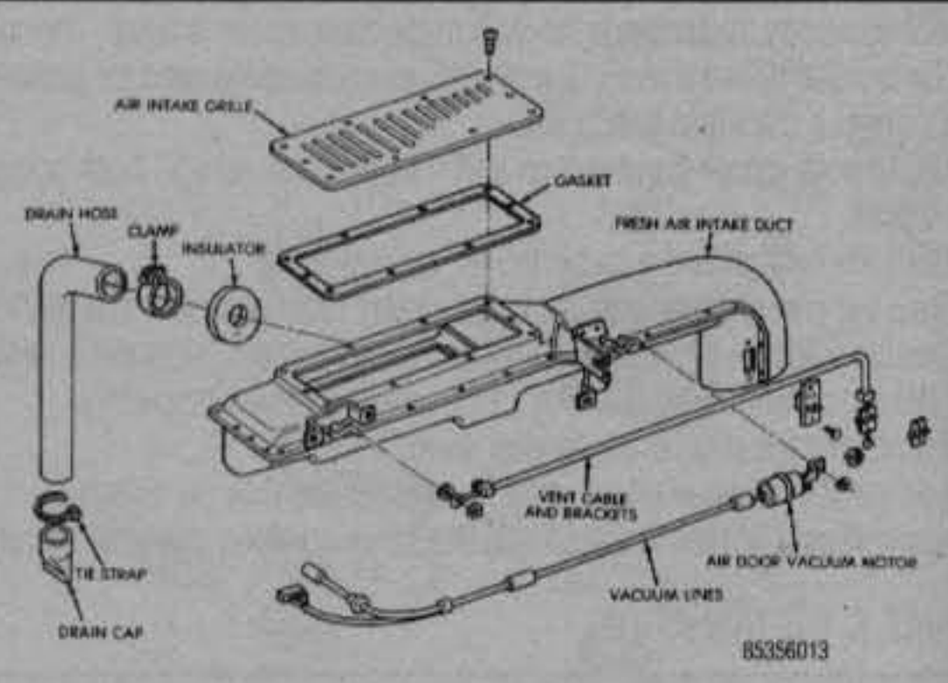

Fig. 25 Fresh air intake system

WINDSHIELD WIPERS

Wiper Blades and Arms

REMOVAL & INSTALLATION

See Figures 26, 27 and 28

1. Pull the blade away from the windshield.
2. Rotate the wiper blade release clockwise to release the wiper blade from the pivot pin.
3. To install the blade, just snap it into position.
4. To remove the arm, carefully pry it straight off. When you reinstall it, make sure that it doesn't hit the rubber molding at either edge of the windshield while running.

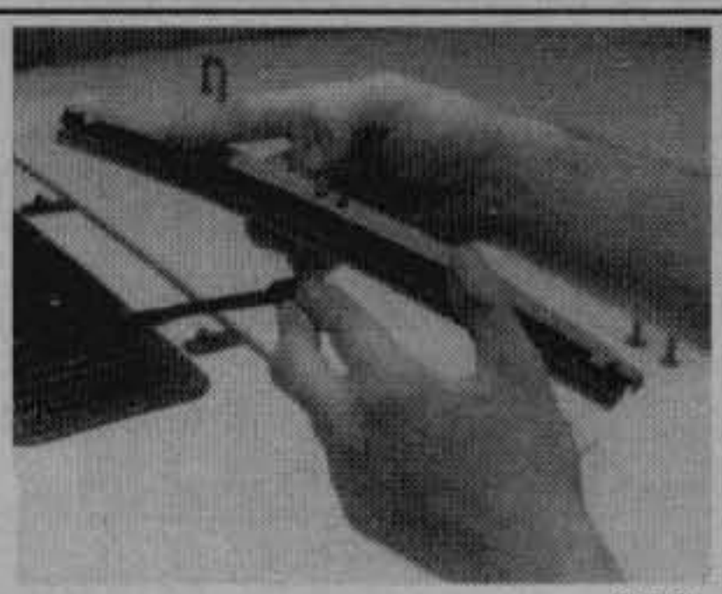

Fig. 26 Rotate the wiper blade release clockwise to remove the wiper blade from the arm

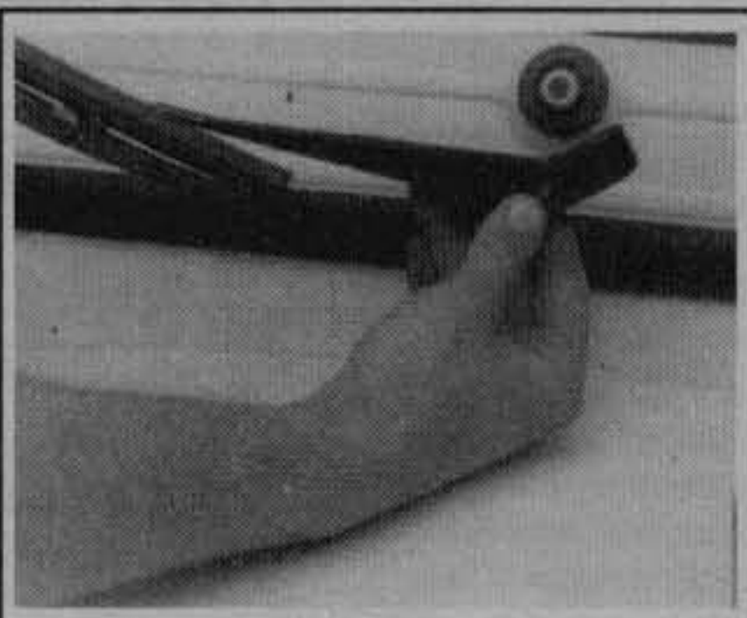

Fig. 27 Carefully pry up on the the wiper arm to remove it from the shaft

Wiper Motor and Linkage

REMOVAL & INSTALLATION

See Figures 29 thru 34

1. Remove the hard or soft top at the windshield frame.

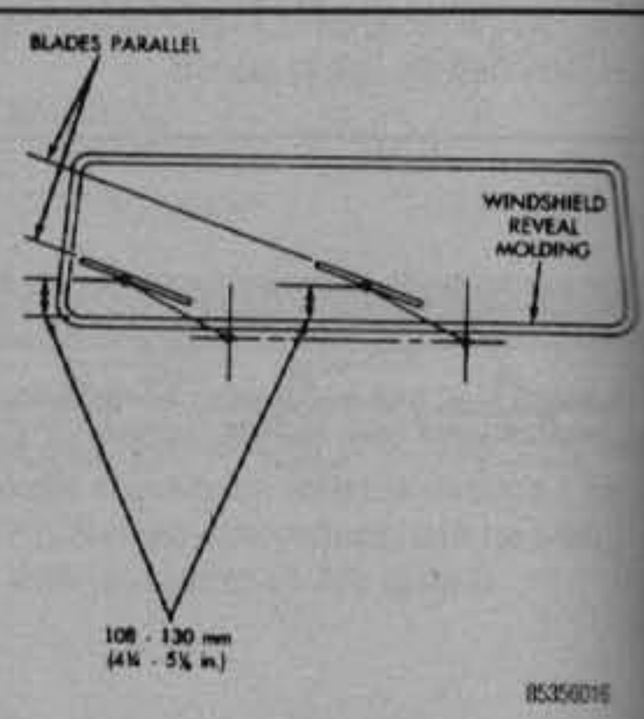

Fig. 28 Wiper arm positioning

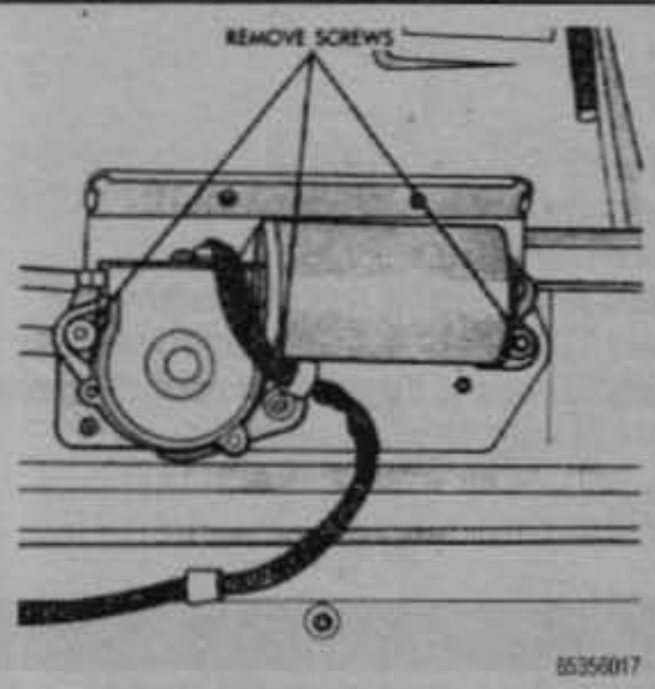

Fig. 29 Wiper motor mounting screws

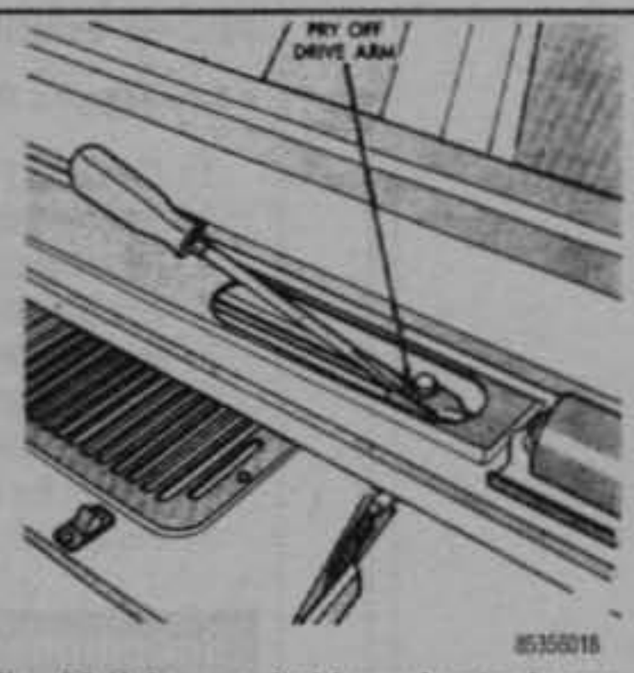

Fig. 30 Using a suitable prying tool carefully pry off the drive arm

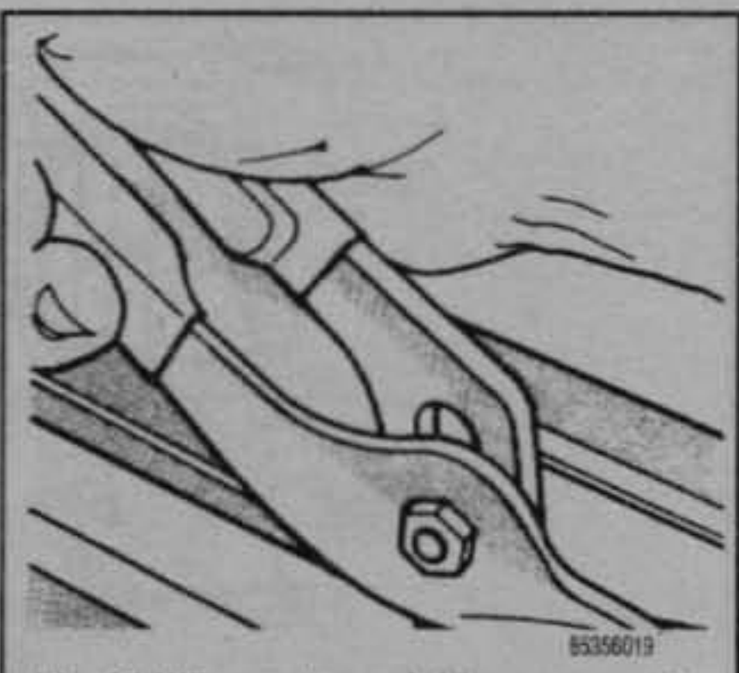

Fig. 31 Wiper motor and drive arm mounting

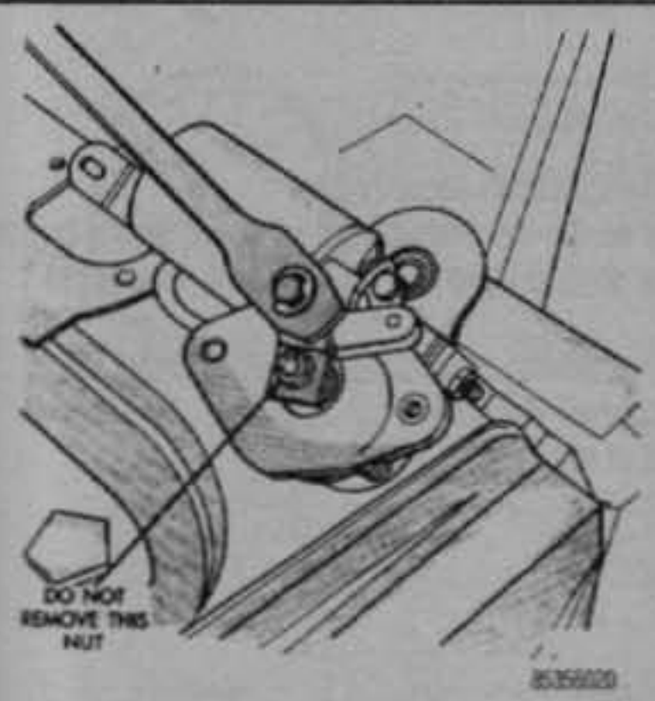

Fig. 32 Drive arm mounting

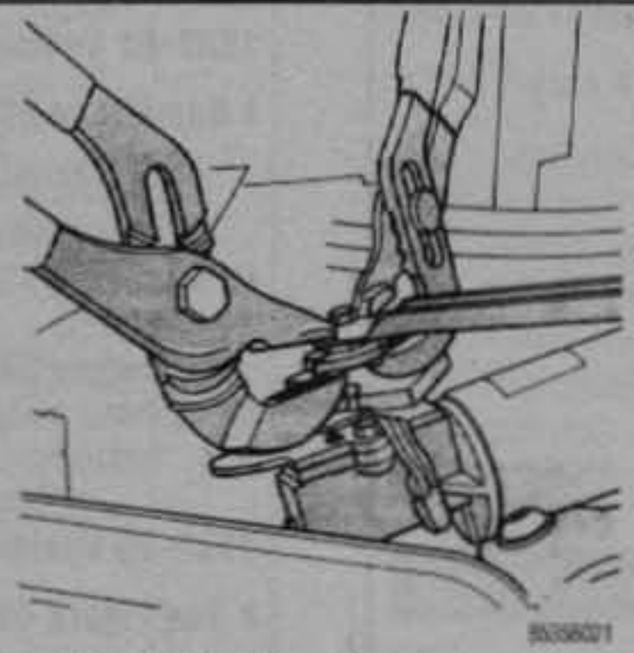

Fig. 33 Installing the drive arm on the motor

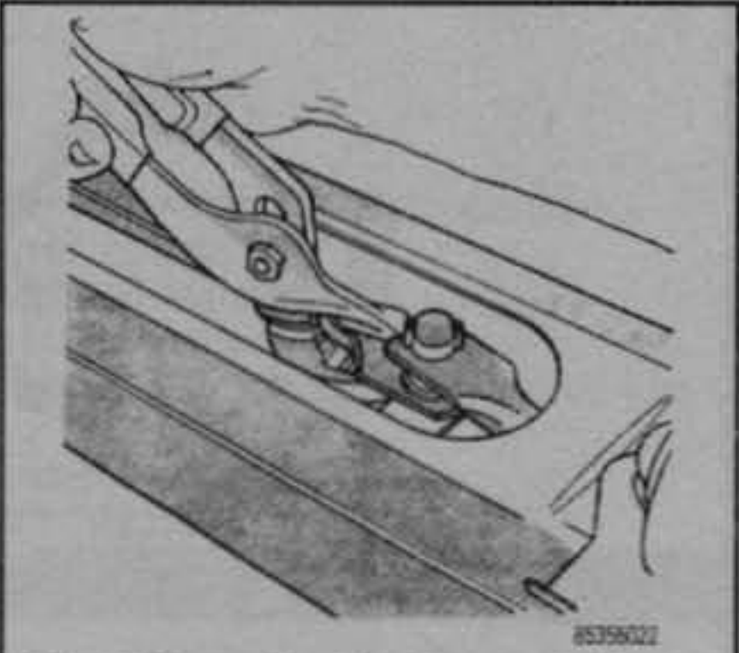

Fig. 34 Connecting the drive arm to the pivot shaft

2. Remove the windshield hold-down bolts in the lower corners of the instrument panel.
3. Remove the wiper motor mounting screws.
4. Remove the harness retaining clips located at the bottom of the windshield.
5. Disconnect the wiper linkage drive arm.
6. Grasp the motor and pull the drive arm out of the access hole.
7. Pry the drive arm off of the motor pivot. DO NOT REMOVE THE PIVOT ATTACHING NUT!
8. Remove the 2 screws holding the intermittent wiper module bracket to the bottom of the instrument panel.
9. Reach up behind the instrument panel and disconnect the wiring harness.
10. Remove the motor.

To install:

11. Install and connect the wiring harness.
12. Install the the intermittent wiper module bracket to the bottom of the instrument panel.
13. Turn the wipers on to make sure the motor cycles to the PARK position.
14. Install the wiper linkage drive arm on the motor pivot.
15. Install the motor and drive arm in the windshield frame.
16. Connect the wiper linkage drive arm to the pivot shaft.
17. Install the wiper motor mounting screws. Torque the screws to 96 inch lbs. (11 Nm).
18. Install the harness retaining clip located at the bottom of the windshield.
19. Install the windshield.
20. Install the hard or soft top at the windshield frame.

INSTRUMENT AND SWITCHES

Instrument Cluster

REMOVAL & INSTALLATION

1987–91 Vehicles

See Figures 35, 36 and 37

1. Disconnect the battery ground.
2. Remove the shroud screws (usually 5).
3. Slide the shroud toward the steering wheel.
4. Apply upward pressure to the shroud and downward pressure to the indicator panel to release the holding tabs.
5. Side the shroud toward the steering wheel.
6. The speedometer and tachometer are removed individually, as outlined later in this section.
7. Installation is the reverse of removal.

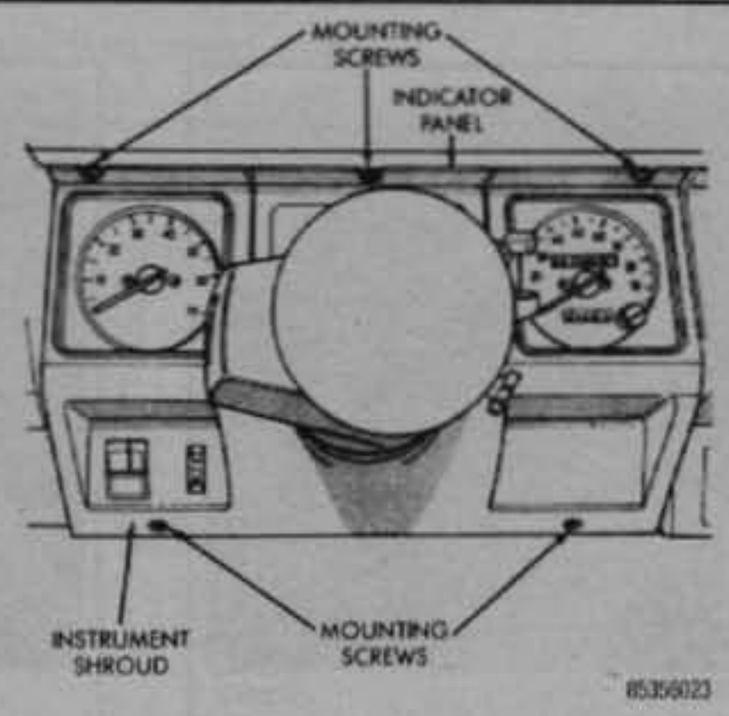

Fig. 35 Instrument shroud replacement—1987–91 vehicles

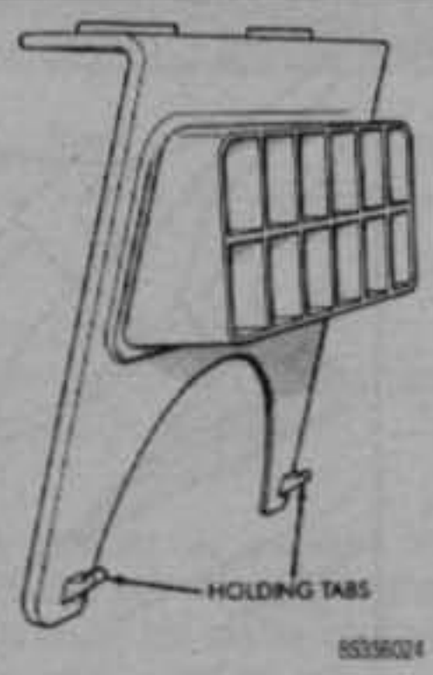

Fig. 36 Indicator panel installation—1987–91 vehicles

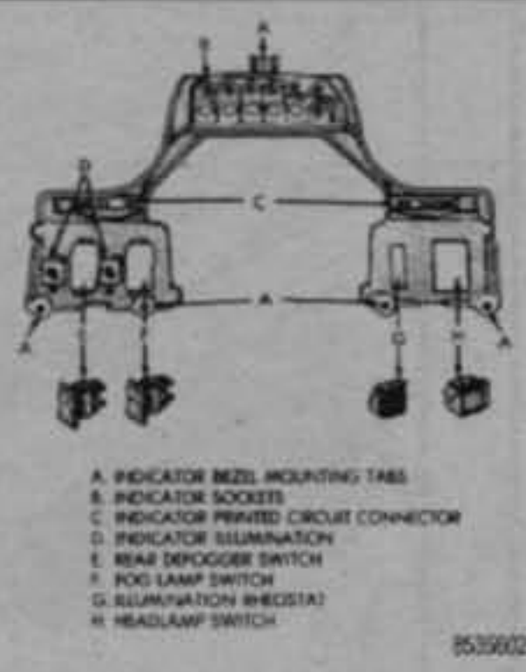

Fig. 37 Indicator panel installation—1987–91 vehicles

1992–95 Vehicles

See Figures 38 thru 43

1. Disconnect the battery ground.
2. Remove the shroud screws (usually 6).
3. Slide the shroud toward the steering wheel.
4. Remove the screws (usually 3) retaining the right side switch panel.
5. Remove the screws (usually 3) retaining the left side switch panel.
6. Remove the screws (usually 2) retaining the cluster in place, then gently pull the cluster towards you and disengage the wiring connector.
7. Lift out the cluster.
8. Installation is the reverse of removal.

Speedometer

REMOVAL & INSTALLATION

1987–91 Vehicles

See Figure 44

1. Remove the shroud attaching screws (usually 5).
2. Exert downward pressure on the top and upward pressure on the bottom (of the shroud) while pulling the shroud towards you. This will release the retaining tabs.
3. Remove the speedometer attaching screws (usually 2) and pull the speedometer towards you. Disconnect the cable.
4. Installation is the reverse of removal.

1992–95 Vehicles

See Figure 45

1. Disconnect the battery ground.
2. Remove the instrumentation shroud as outlined in cluster removal.

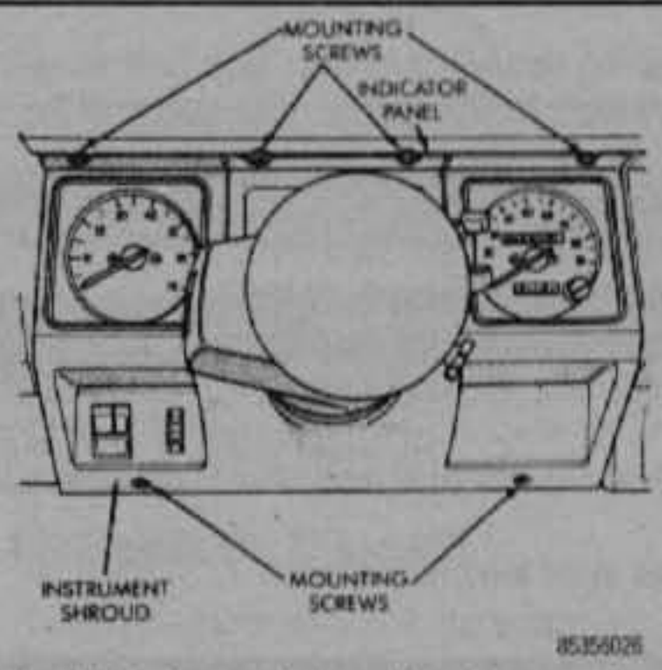

Fig. 38 Instrument shroud replacement—1992–95

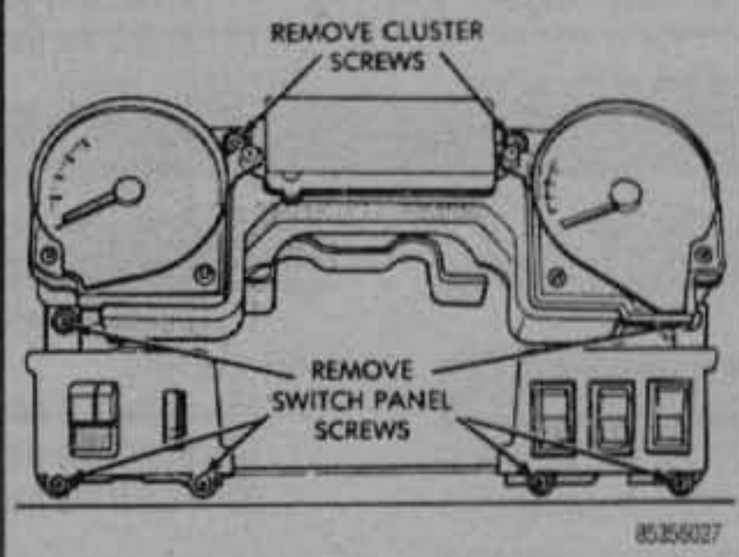

Fig. 39 Cluster removal—1992–95

Fig. 40 Remove the indicator panel retaining screws—1990–95

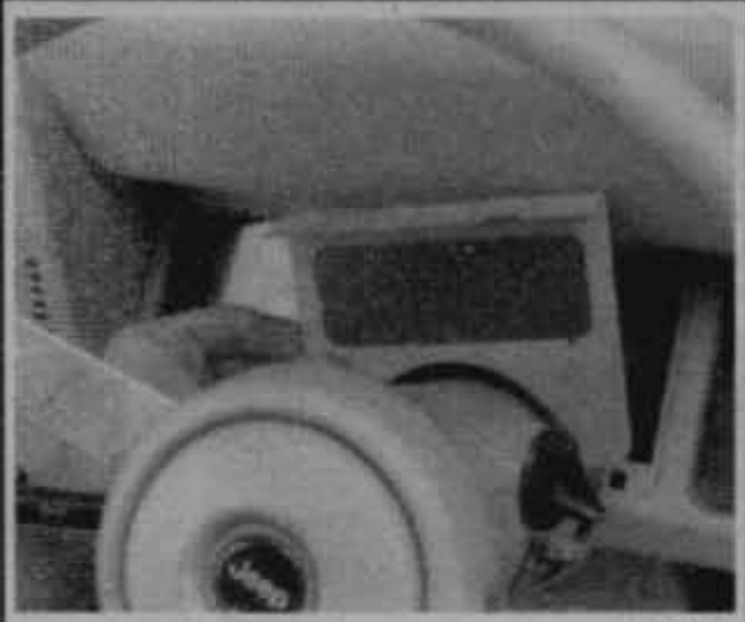

Fig. 41 Indicator panel mounting—1992–95

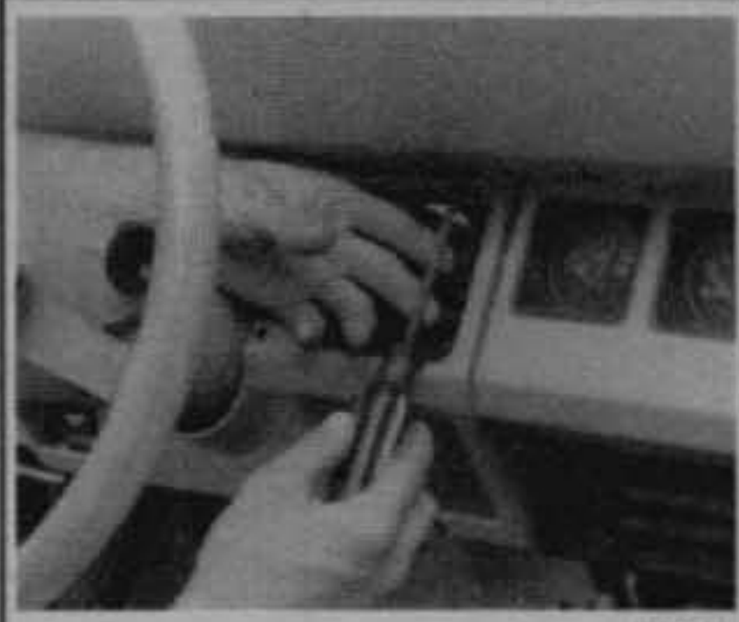

Fig. 42 Remove the instrument shroud retaining screws—1992–95

Fig. 43 Remove the shroud for access to the instruments—1992–95

Fig. 44 Speedometer mounting—1987–91 vehicles

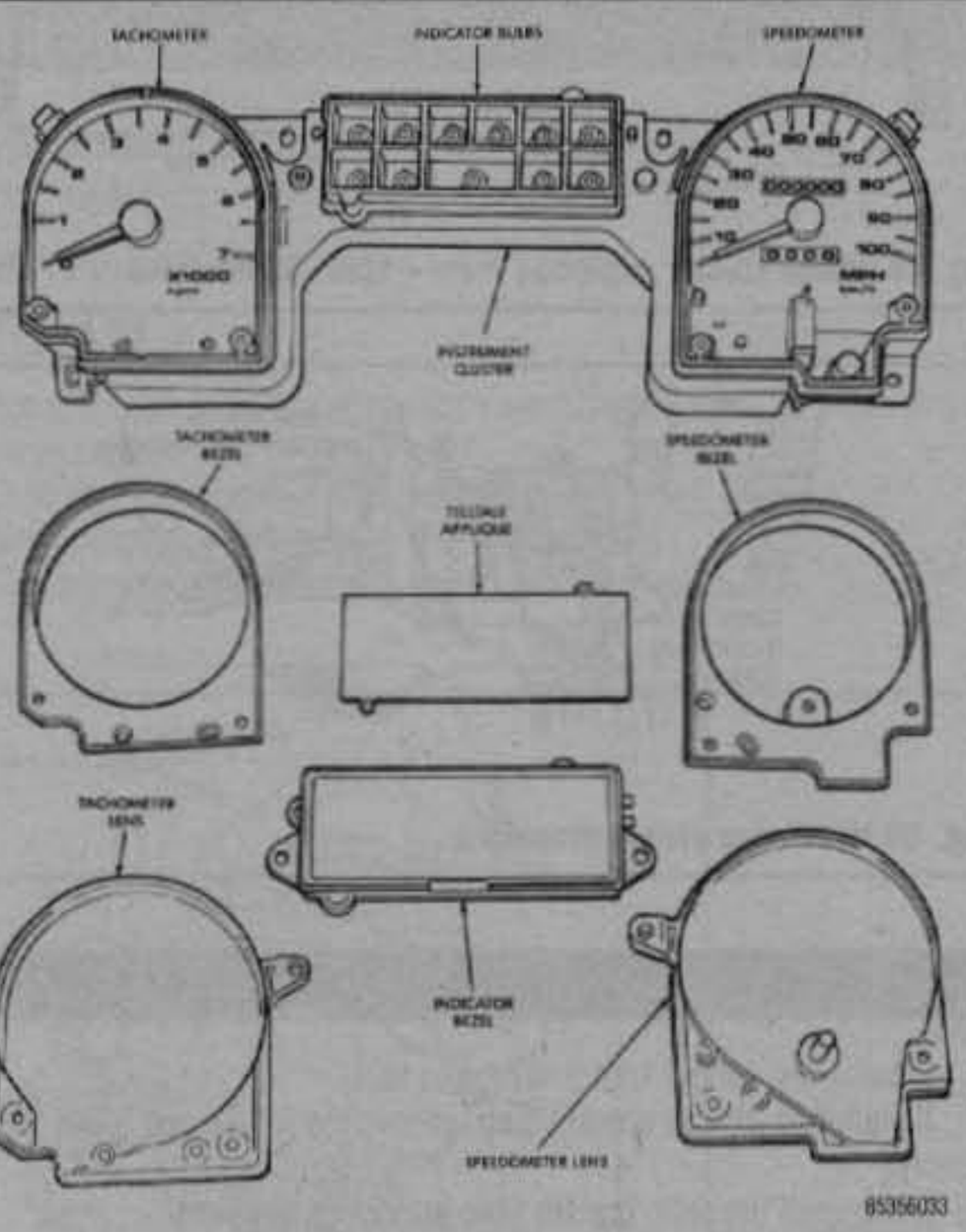

Fig. 45 Instrument cluster lenses and bezels—1990–95

3. Remove the cluster as outlined earlier.
4. Remove the 3 screws and the speedometer lens.
5. Gently pry up the clip to release the lens from the bezel.
6. Remove the screws (usually 3) from the rear of the housing and remove the speedometer.
7. Installation is the reverse of removal.

Tachometer

REMOVAL & INSTALLATION

1987–91 Vehicles

See Figure 46

1. Remove the shroud attaching screws (usually 5).
2. Exert downward pressure on the top and upward pressure on the bottom (of the shroud) while pulling the shroud towards you. This will release the retaining tabs.
3. Remove the tachometer attaching screws (usually 2) and pull the tachometer towards you. Disconnect the wiring.
4. Installation is the reverse of removal.

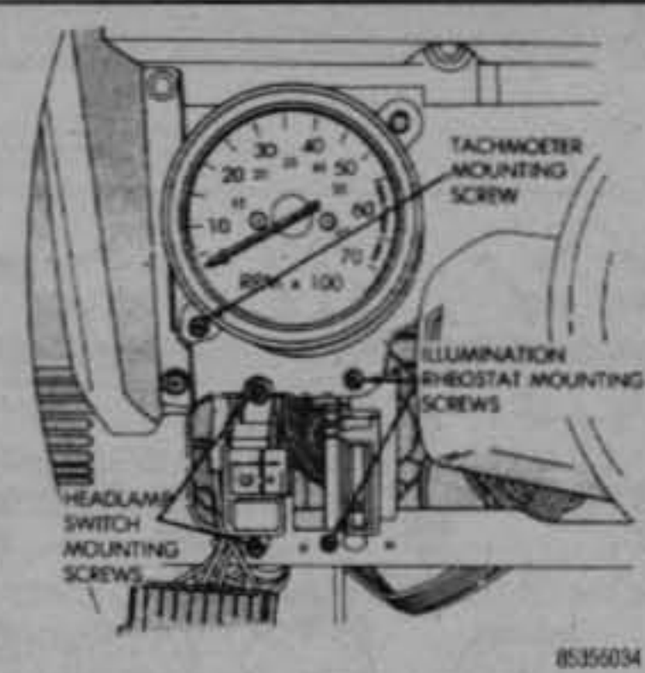

Fig. 46 Tachometer installation—1987–91 vehicles

1992–95 Vehicles

See Figure 45

1. Disconnect the battery ground.
2. Remove the instrumentation shroud as outlined in cluster removal.
3. Remove the cluster as outlined earlier.
4. Remove the 3 screws and the tachometer lens.
5. Gently pry up the clip to release the lens from the bezel.
6. Remove the screws (usually 3) from the rear of the housing and remove the tachometer.
7. Installation is the reverse of removal.

Gauge Cluster

REMOVAL & INSTALLATION

See Figures 47, 48 and 49

1. Disconnect the battery ground.
2. Remove the gauge housing mounting screws (usually 6).
3. Unplug the connector from the cluster.
4. Lift out the gauge cluster.
5. Installation is the reverse of removal.

Headlight Switch

REMOVAL & INSTALLATION

See Figure 50

1. Disconnect the battery ground.
2. Remove the instrument shroud as outlined earlier in cluster removal.
3. Remove the 2 switch attaching screws, pull out the switch and unplug the connector.
4. Installation is the reverse of removal.

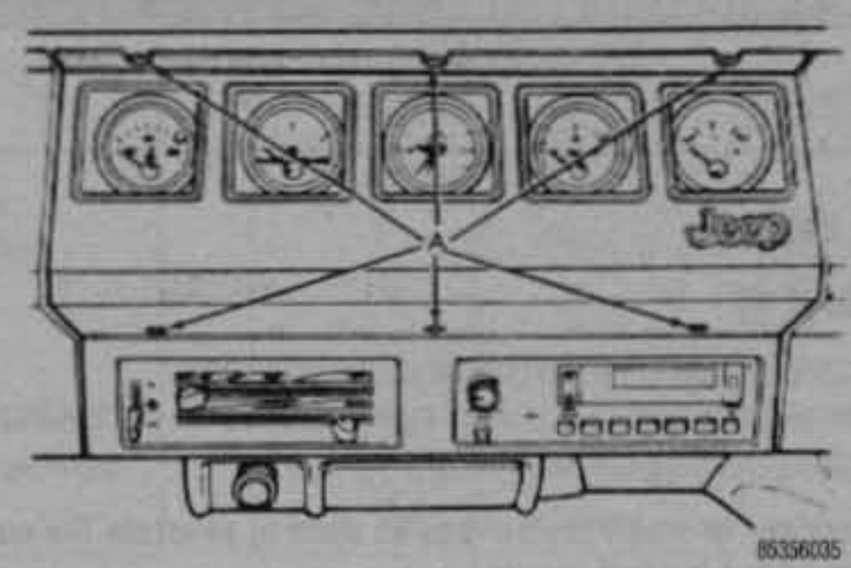

Fig. 47 Gauge cluster mounting

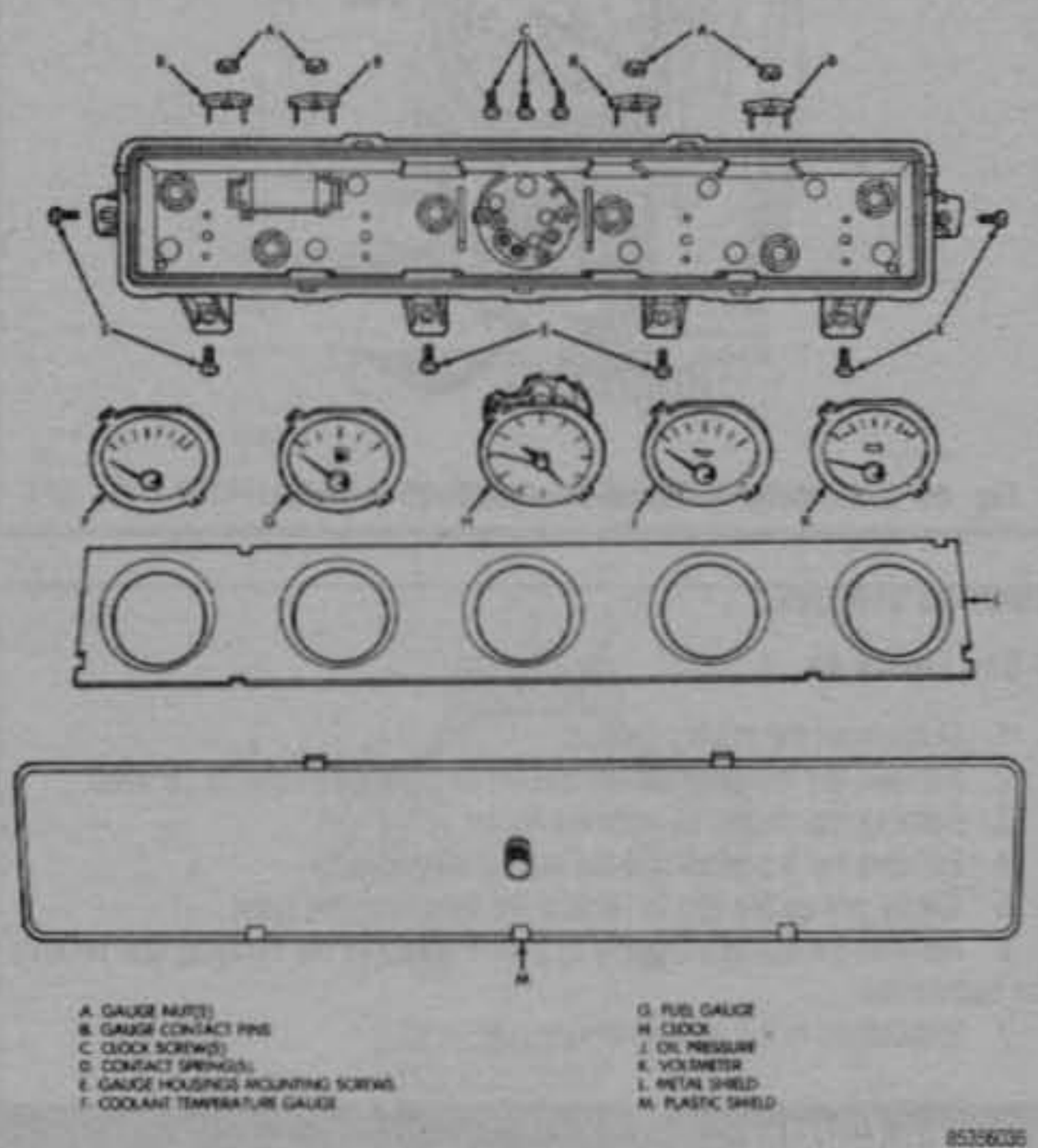

Fig. 48 Gauge cluster exploded view—1987–91 vehicles

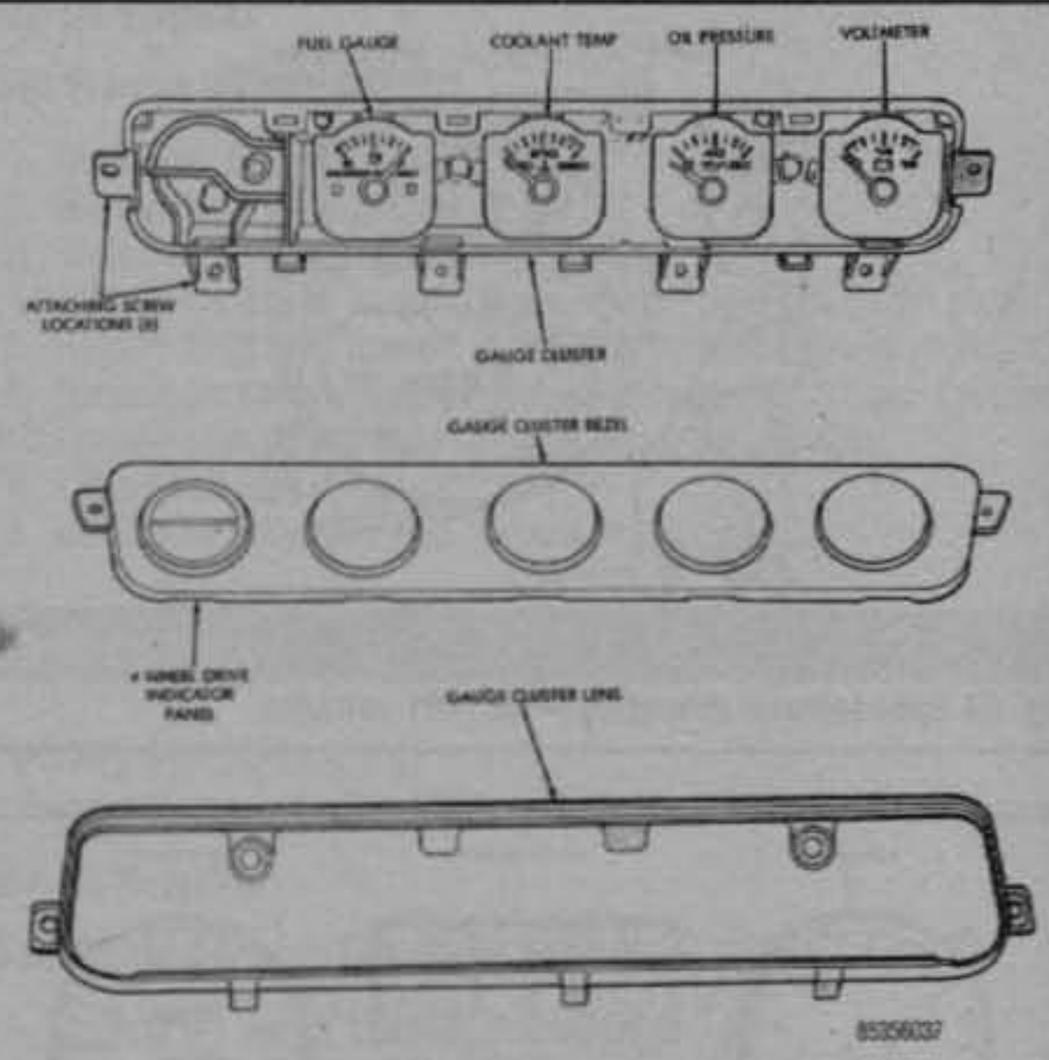

Fig. 49 Gauge cluster exploded view—1992–95 vehicles

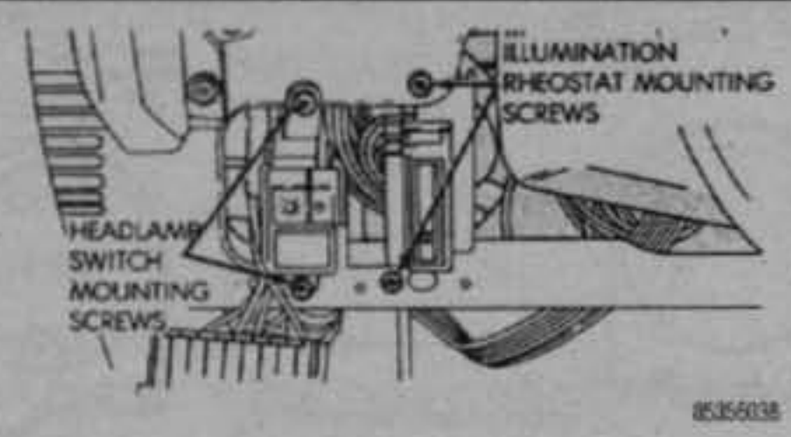

Fig. 50 Headlamp switch mounting

RADIO

Radio

REMOVAL & INSTALLATION

See Figure 47

1. Disconnect the battery ground cable.
2. Remove the gauge cluster bezel as outlined under Gauge Cluster removal and installation.
3. Remove the control knobs, nuts, and bezel.
4. If equipped with air conditioning, remove the screws and lower the assembly.
5. Disconnect the radio bracket from the instrument panel.
6. Tilt the radio down and remove it toward the steering wheel.
7. Detach the antenna, speaker, and power wires.
8. Reverse the procedure for installation.

CRUISE CONTROL

Cruise Control Regulator

REPLACEMENT

1987–90 Vehicles

See Figure 51

The module is located on the firewall by the fuse panel.

1. Remove the mounting screws or tape that holds the module in place.
2. Unplug the wiring connector.

A screwdriver or small prytool can be used to separate the connector. A slot is provided for that purpose.

3. Installation is the reverse of removal.

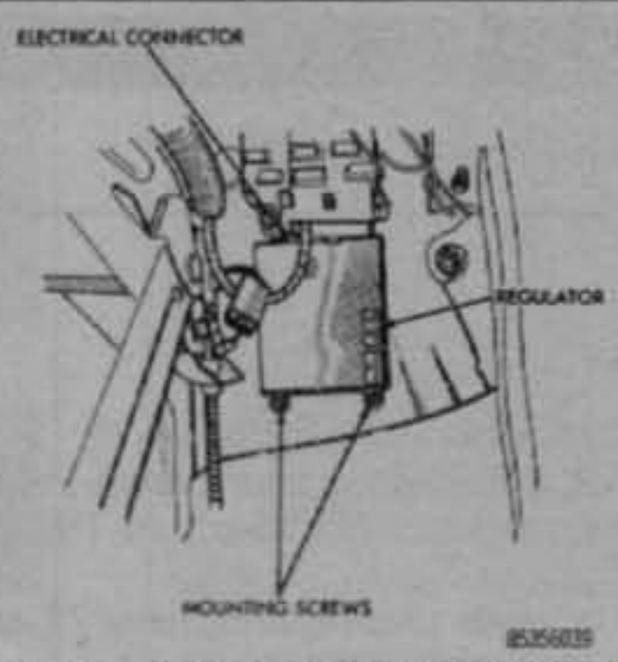

Fig. 51 The cruise control regulator is located under the dashboard by the fuse panel

Servo

REMOVAL & INSTALLATION

1987–90 Vehicles

See Figure 52

The servo is mounted on a bracket in the engine compartment

1. Remove the locknut holding the servo to the bracket.
2. Remove the 2 vacuum hoses from the servo.
3. Unplug the electrical connector.
4. Remove the 2 nuts and cable housing from the servo.
5. Release the cable clip.
6. Installation is the reverse of removal. Tighten the locknut to 60 inch lbs. (7 Nm).

Speed Sensor

REMOVAL & INSTALLATION

1987–90 Vehicles

See Figure 53

The speed sensor is located above the front driveshaft and is inline with the speedometer cable.

1. Unscrew the 2 attaching nuts from the sensor.
2. Disconnect the wire lead from the cruise harness.
3. Installation is the reverse of removal.

Control Switch

REMOVAL & INSTALLATION

1987–90 Vehicles

See Figures 54 thru 59

1. Disconnect the battery ground.
2. Cover the painted areas of the column.
3. Remove the column-to-dash bezel.
4. Loosen the toe plate screws.
5. With tilt columns, place the column in the non-tilt position.
6. Remove the steering wheel.
7. Remove the lockplate cover.
8. Compress the lockplate and unseat the steering shaft snapring with compressor tool C5156.

CAUTION

Do not attempt to remove the lockplate without compressor tool C4156 as the lockplate is under heavy spring tension.

9. Remove the compressor and snapring.
10. Remove the lockplate, canceling cam and upper bearing preload spring.
11. Place the turn signal lever in the right turn position and remove the lever.
12. Remove the hazard warning knob. Press the knob inward and turn counterclockwise to remove it.
13. Remove the wiring harness protectors.
14. Disengage the wiring harness connectors.
15. Remove the turn signal switch attaching screws and lift out the switch.

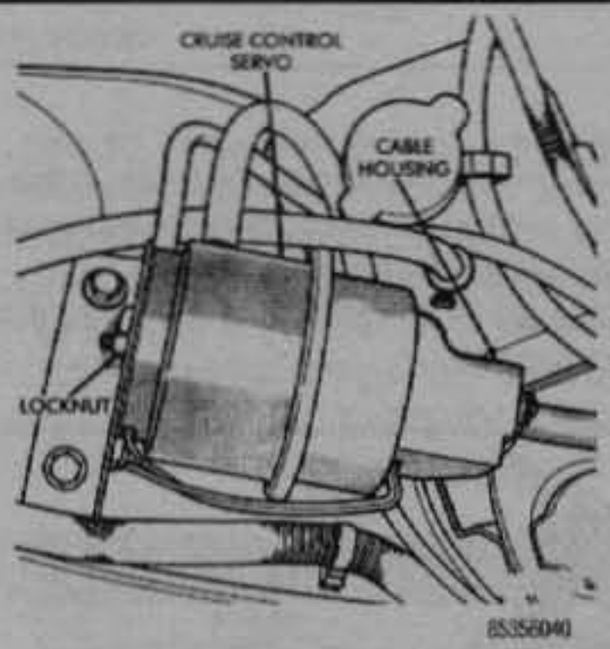

Fig. 52 The cruise control servo—1987–90 vehicles

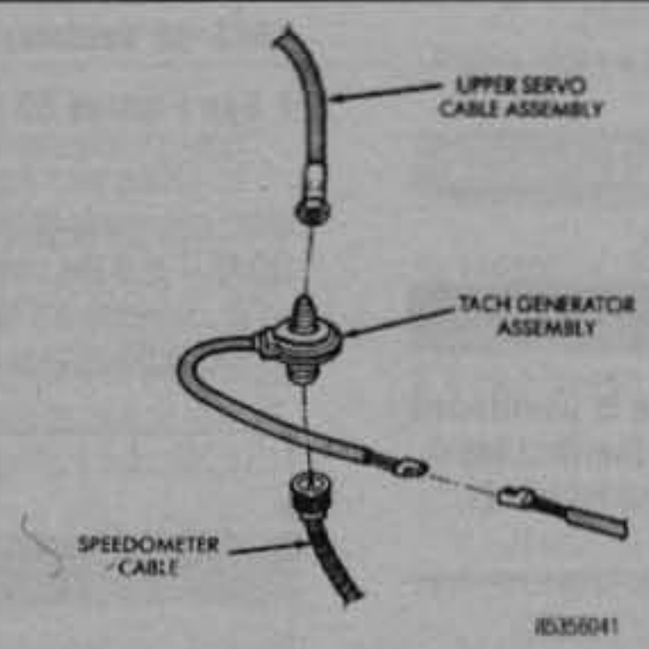

Fig. 53 Example of a common cruise control speed sensor—1987–90 vehicles

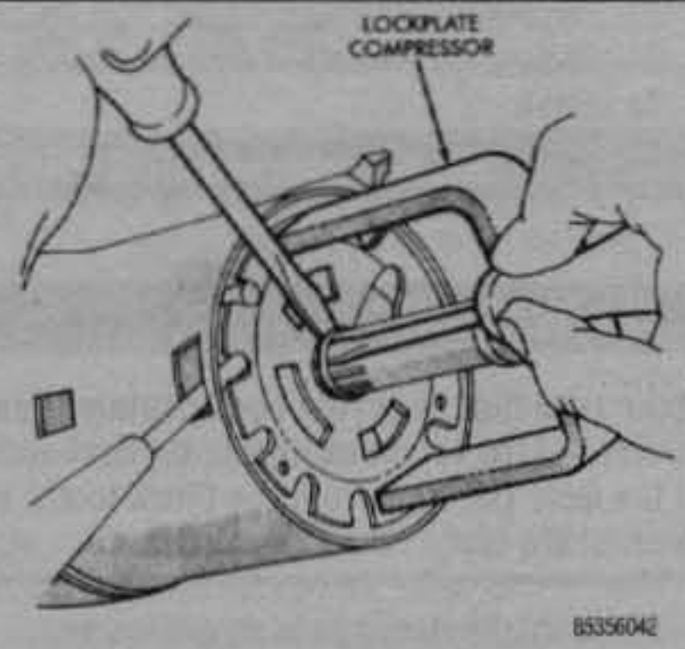

Fig. 54 Lockplate removal—1987–90 vehicles

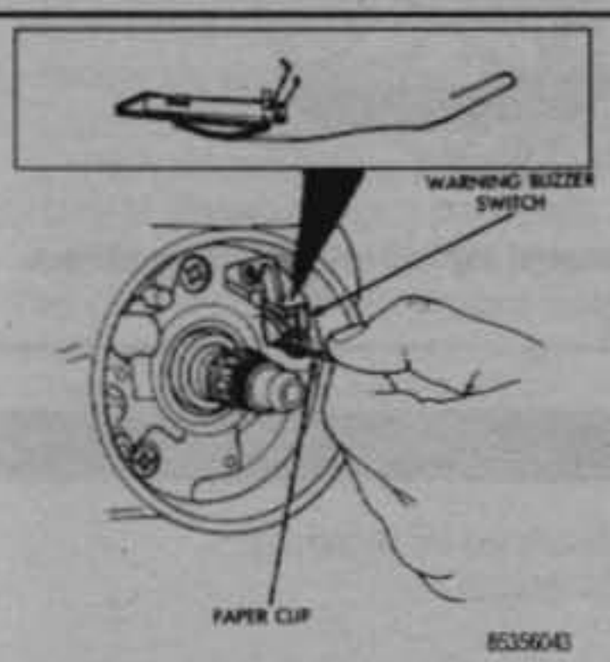

Fig. 55 Buzzer switch removal—1987–90 vehicles

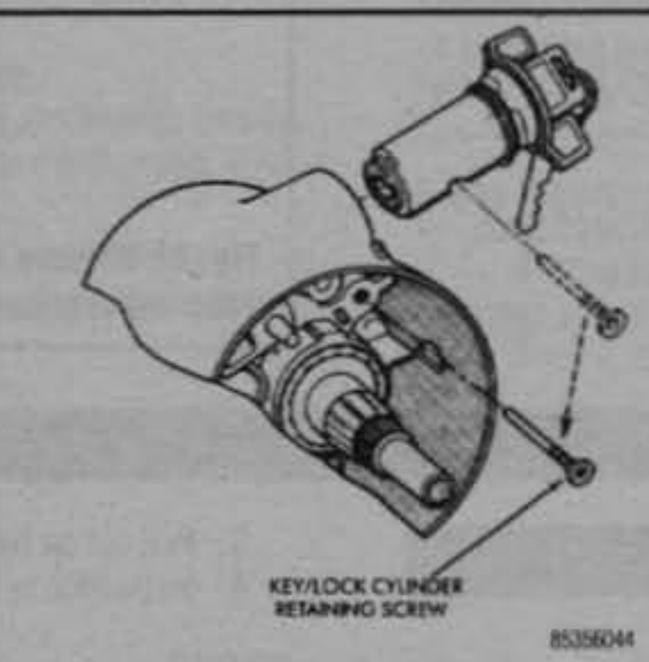

Fig. 56 Lock cylinder mounting—1987–90 vehicles

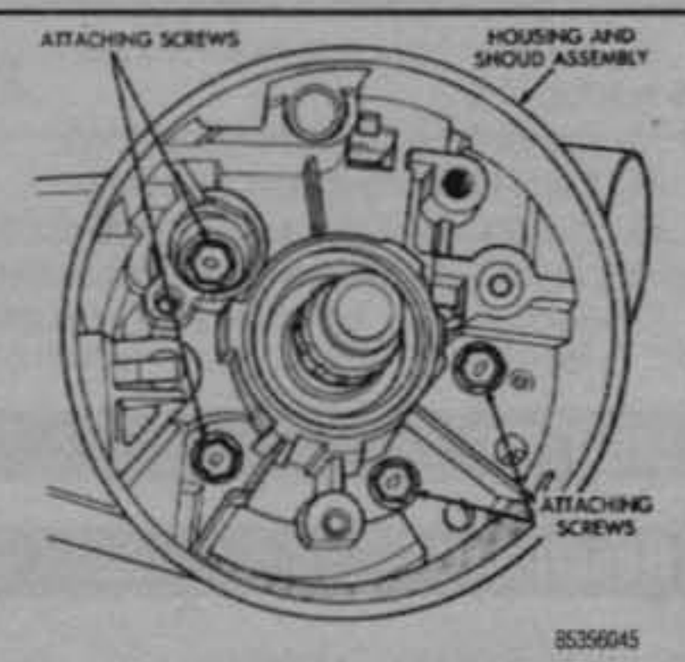

Fig. 57 Steering column housing mounting—1987–90 vehicles

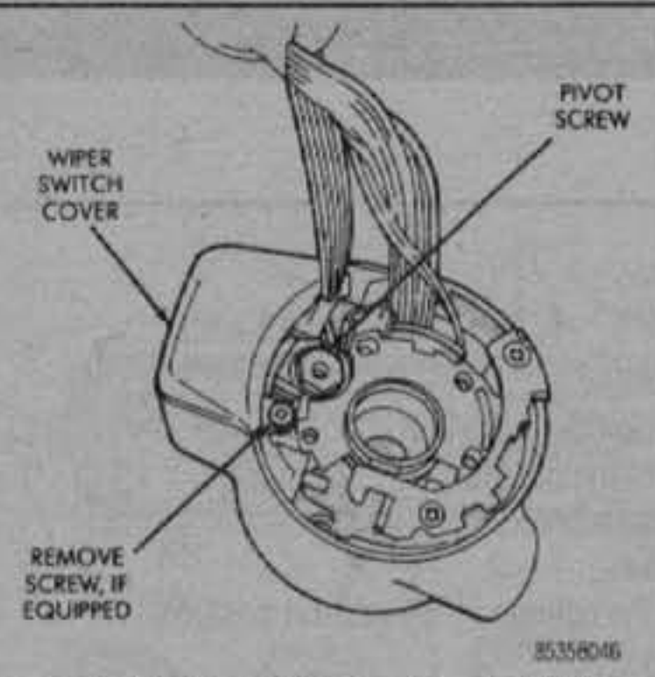

Fig. 58 Pivot screw removal—1987–90 vehicles

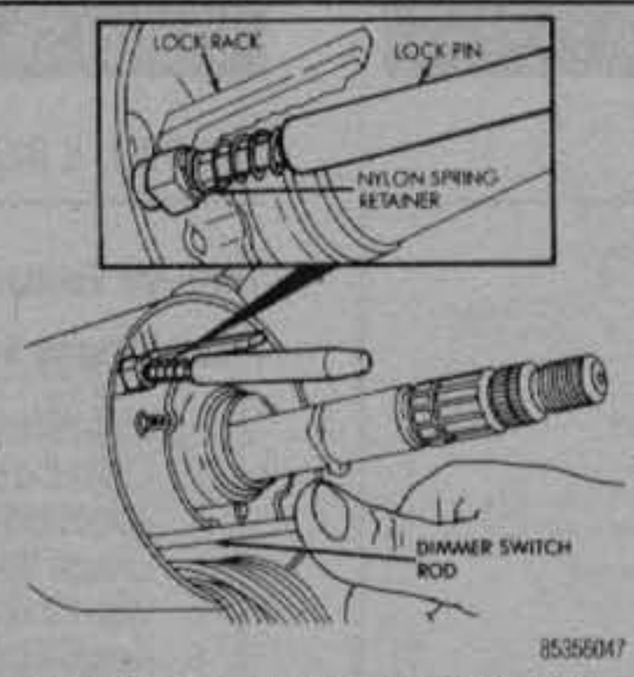

Fig. 59 Dimmer switch rod and lockpin removal—1987–90 vehicles

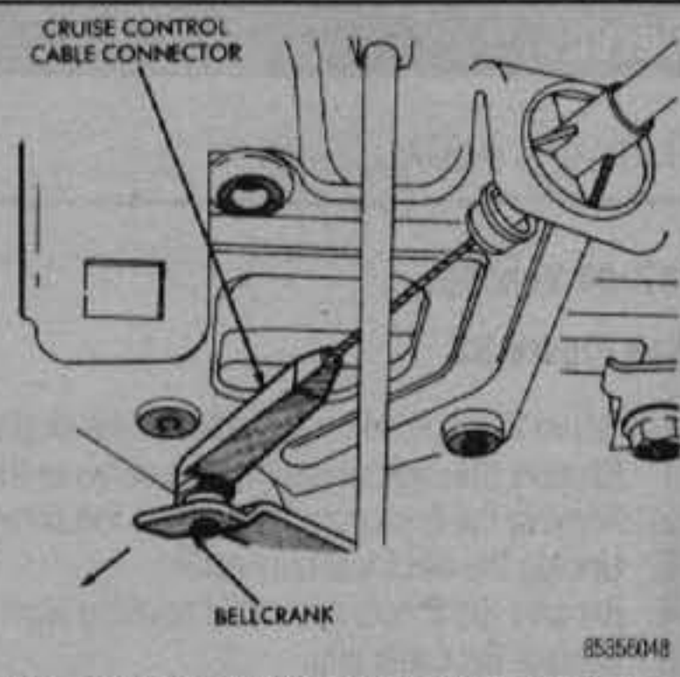

Fig. 60 Remove the belcrank connector—1987–90 vehicles

16. Unplug the cruise control switch connector.
17. Pull the control harness from the column.
18. Insert the key. Position the key **ON**.
19. Remove the key warning buzzer switch and retaining clip using a paper clip (inserted below the retainer) to flatten the retainer and free the assembly.

➡Do not attempt to remove the buzzer switch and clip separately. The clip will probably fall into the column jacket.

20. Working through the slot next to the turn signal switch mounting boss, use a thin screwdriver to release the lock cylinder.
21. Remove the screws that attach the housing and shroud assembly, then remove them.

➡Be careful to avoid dropping the dimmer switch rod, lockpin or lock rack.

22. Remove the turn signal/wiper lever.
23. Remove the wiper switch cover from the back of the housing.
24. Remove the pivot screw from the housing and remove the wiper switch.

To install:

25. Install a new switch and cover.
26. Push on the dimmer switch rod to make sure it's connected, then carefully position the housing on the column.

WARNING

Make sure that the nylon spring retainer on the lockpin is positioned forward of the retaining slot in the lock rack. Position the first tooth of the gear (farthest from the block tooth) with the most forward tooth of the lock rack.

27. Install the housing and shroud screws.
28. Insert the key in the new lock cylinder. Hold the sleeve and turn the key clockwise until it stops. Align the cylinder retaining tab with the housing slot and insert the cylinder. Push the cylinder in, rotate to engage, then push in until the retaining tab engages the housing groove.
29. Install the turn signal switch and attaching screws. Torque the screws to 35 inch lbs. (4 Nm).
30. Engage the wiring harness connectors.
31. Install the wiring harness protectors.
32. With the turn signal switch in the neutral position, install the hazard warning knob. Press the knob inward and turn clockwise to secure it.
33. Install the lever. Torque the attaching screws to 35 inch lbs. (4 Nm)
34. Install the upper bearing preload spring.
35. Install the canceling cam.
36. Install the lockplate.
37. Using the compressor, install the snapring.
38. Install the lockplate cover.
39. Install the steering wheel.
40. Loosen the toe plate screws.
41. Install the column-to-dash bezel.
42. Connect the battery ground.

Servo Cable

REMOVAL & INSTALLATION

1987–90 Vehicles

See Figures 60 and 61

1. Using your fingers only — NO TOOLS — remove the cruise control cable connector at the bell crank by pushing the connector off the bell crank. DO NOT pull the connector off perpendicular to the bell crank!
2. Squeeze the tabs on the cable and lift the cable out of the locking plate
3. Installation is the reverse of removal.

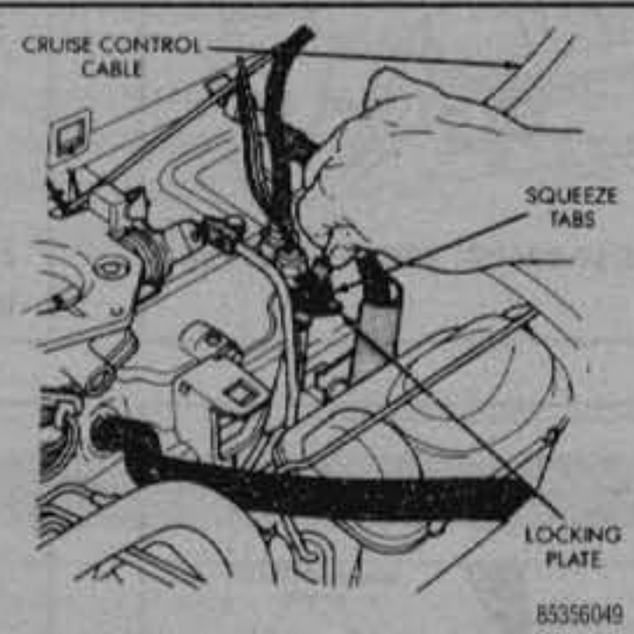

Fig. 61 Remove the cruise control cable from the locking plate—1987–90 vehicles

LIGHTING

Headlights

REMOVAL & INSTALLATION

See Figures 62 thru 67

1. Remove the trim ring screws (usually 4), then remove the trim ring.
2. Remove the retaining ring screws (again, usually 4).
3. Pull out on the lamp and disconnect the wiring plug.
4. Installation is the reverse of removal.

AIMING

The headlights must be properly aimed to provide the best, safest road illumination. The lights should be checked for proper aim, and adjusted if necessary, after installing a new sealed beam unit or if the front end sheet metal has

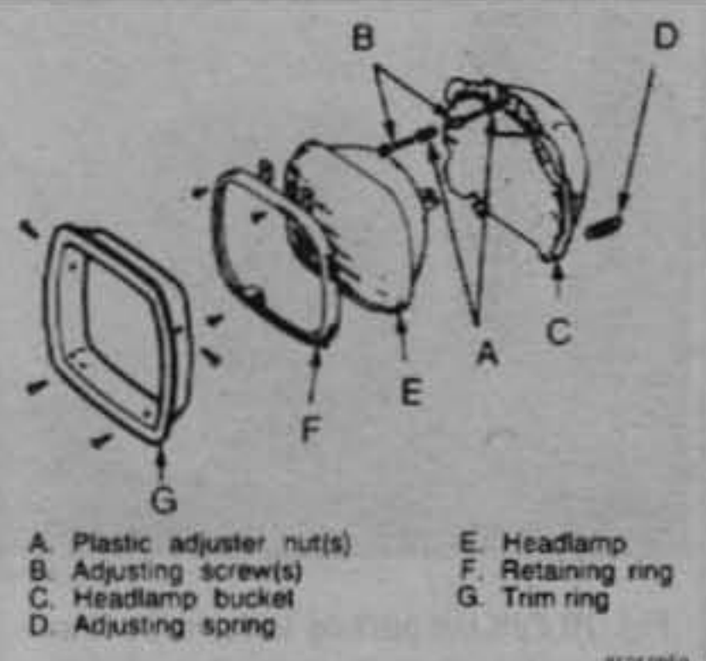

Fig. 62 Headlamp components

Fig. 63 Remove the headlamp trim ring retaining screws

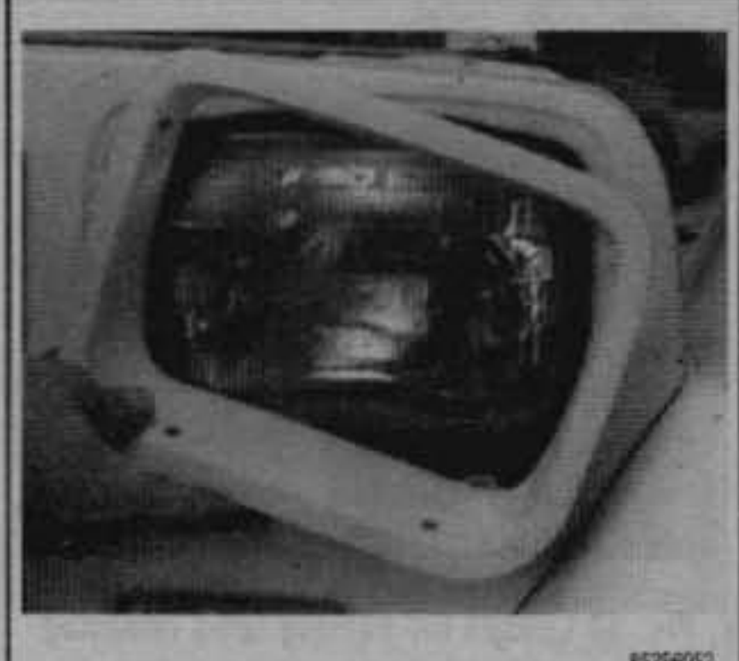

Fig. 64 Remove the headlamp trim ring

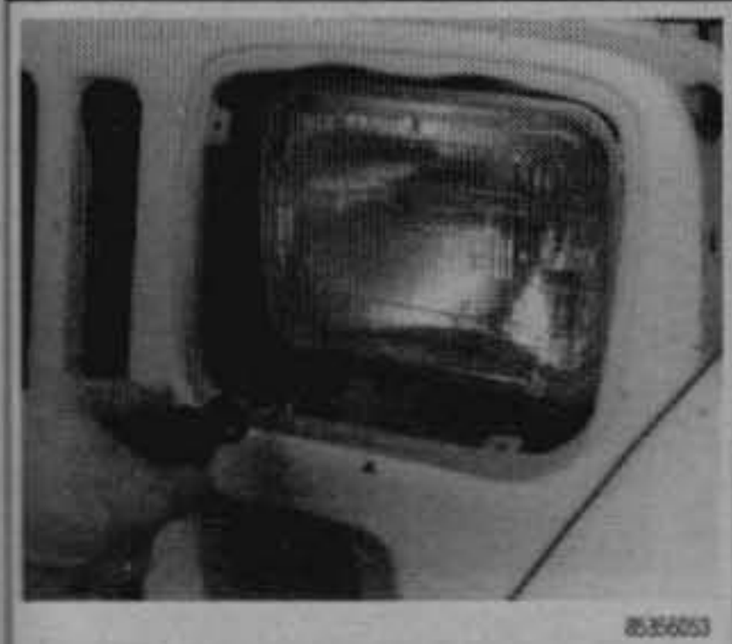

Fig. 65 Remove the headlamp retaining ring screws

Fig. 66 Remove the headlamp retaining ring

Fig. 67 Pull out on the lamp and disconnect the wiring plug

been replaced. Certain state and local authorities have requirements for headlight aiming and you should check these before adjusting.

The vehicle's fuel tank should be about half full when adjusting the headlights. Tires should be properly inflated, and if a heavy load is normally carried in the back of your Jeep, it should remain there.

Horizontal and vertical aiming of each sealed beam unit is provided by two adjusting screws, which move the mounting ring in the body against the tension of the coil spring. There is no adjustment for focus; this is done during headlight manufacture.

Fog Lights

AIMING

1. Park the Jeep on level ground, facing, perpendicular to, and about 25 ft. (7.6 meters) from a flat wall.
2. Remove any stone shields and switch on the fog lights.
3. Loosen the mounting hardware of the lights so you can aim them as follows:
   a. The horizontal distance between the light beams on the wall should be the same as between the lights themselves.
   b. The vertical height of the light beams above the ground should be 4 inches (102mm) less than the distance between the ground and the center of the lamp lenses.
4. Tighten the mounting hardware.

Signal, Parking, Brake and Marker Lights

REMOVAL & INSTALLATION

See Figures 68 thru 79

Depending on the year and model of your Jeep, these lights can be removed in one of two ways:

1. Reach up behind the light, disconnect the wire and turn the bulb socket counterclockwise in order to separate the socket from the lamp, or
2. Remove the lamp lens screws, remove the lens, turn the bulb and remove it from the socket.

Center High-Mounted Stop Lamp

REMOVAL & INSTALLATION

See Figures 80 and 81

1. Remove the lamp lens retaining screws and remove the lens from the housing
2. Remove the housing, turn the bulb and remove it from the socket as necessary.

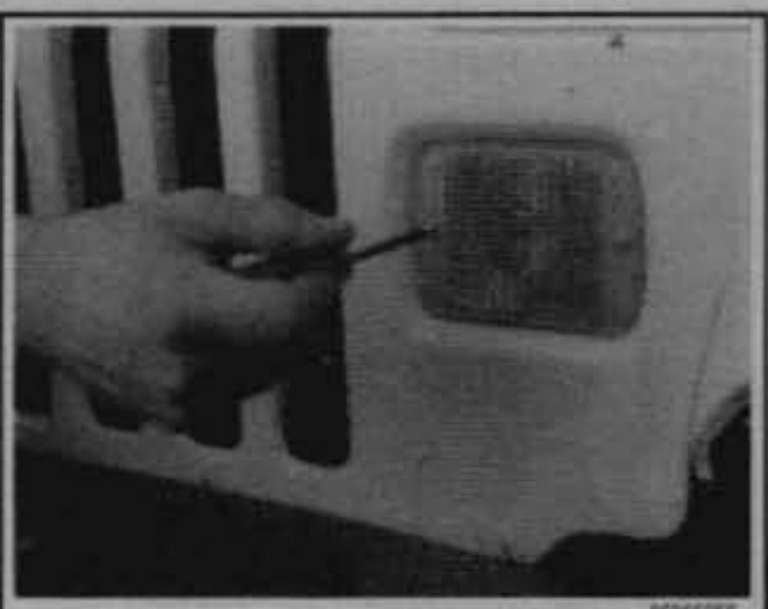

Fig. 68 Loosen the parking lamp retaining screws using a suitable driver—1992 wrangler shown

Fig. 69 Make sure all retainers are removed so the lamp housing will be free

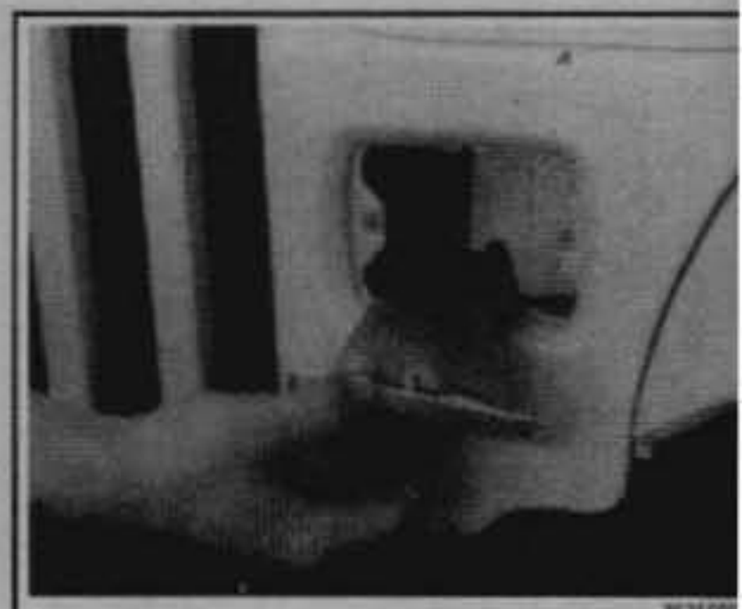

Fig. 70 Pull the parking lamp forward sufficiently for access to the bulb socket at the rear of the lamp

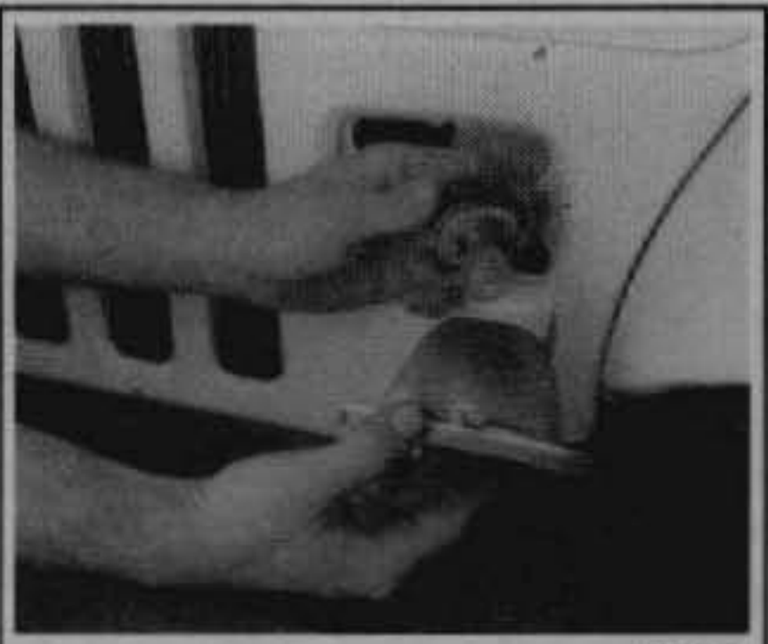

Fig. 71 Disconnect the bulb socket from the rear of the lamp

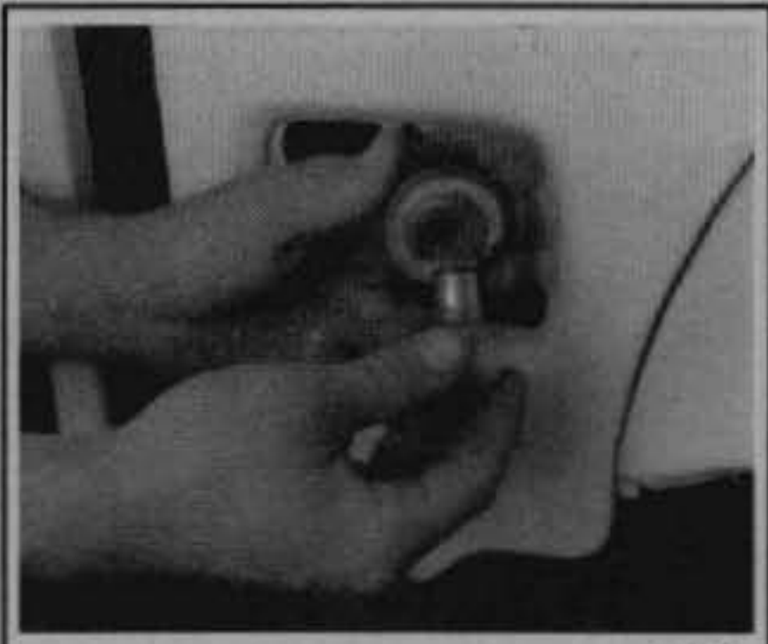

Fig. 72 Remove the bulb from the parking lamp socket

Fig. 73 Marker lamps are usually removed in the same manner as the parking lamps

Fig. 74 Once the retainers are removed, pull out the marker lamp sufficiently to access the bulb socket

Fig. 75 Disconnect the bulb socket from the rear of the lamp

Fig. 76 Remove the bulb from the marker lamp socket

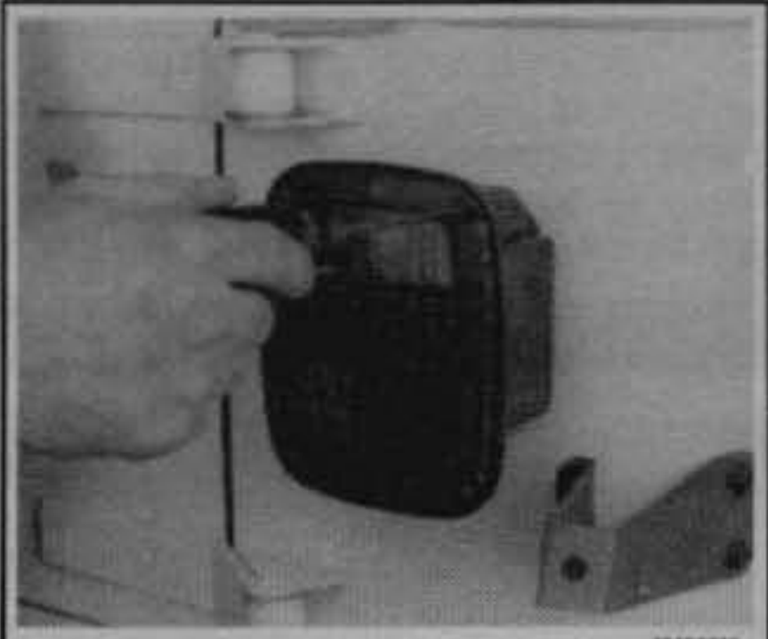

Fig. 77 Remove the tail lamp lens retaining screws

Fig. 78 Remove the tail lamp lens

Fig. 79 After removing the tail lamp lens the back-up and brake light bulbs may be replaced

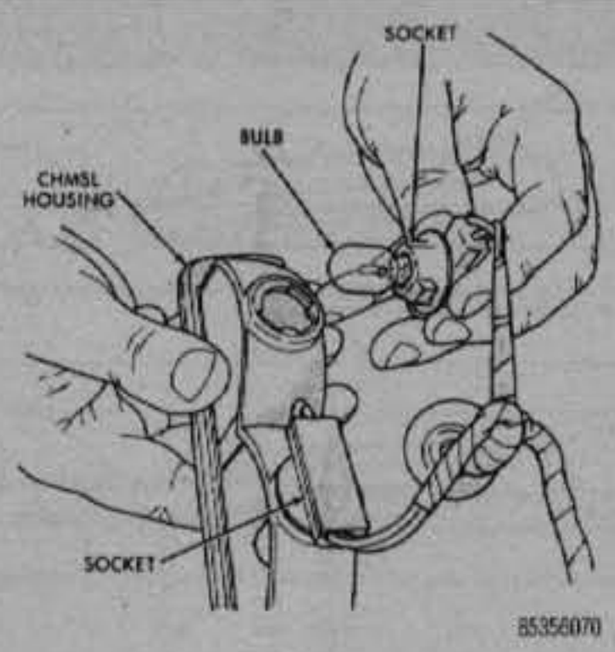

Fig. 80 Replacing the center high-mounted stop lamp bulb

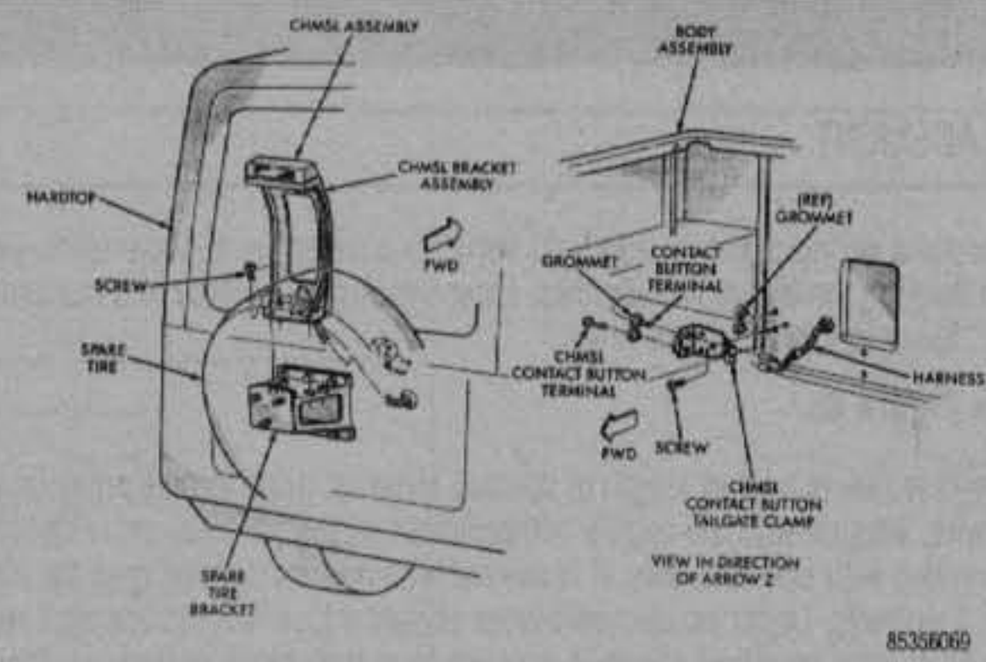

Fig. 81 Center high-mounted stop lamp bracket assembly

TRAILER WIRING

Wiring the Jeep for towing is fairly easy. There are a number of good wiring kits available and these should be used, rather than trying to design your own. All trailers will need brake lights and turn signals as well as tail lights and side marker lights. Most states require extra marker lights for overwide trailers. Also, many states have required back-up lights for trailers, and most trailer manufacturers have been building trailers with back-up lights for some time.

Additionally, some Class I, most Class II and just about all Class III trailers will have electric brakes. Add to this number an accessories wire, to operate trailer internal equipment or to charge the trailer's battery, and you can have as many as seven wires in the harness.

Determine the equipment on your trailer and buy the wiring kit necessary. The kit will contain all the wires needed, plus a plug adapter set which includes the female plug, mounted on the bumper or hitch, and the male plug, wired into, or plugged into the trailer harness.

When installing the kit, follow the manufacturer's instructions. The color coding of the wires is standard throughout the industry.

One, final point, the best kits are those with a spring loaded cover on the vehicle mounted socket. This cover prevents dirt and moisture from corroding the terminals. Never let the vehicle socket hang loosely. Always mount it securely to the bumper or hitch.

CIRCUIT PROTECTION

Fuses and Circuit Breakers

See Figure 82

An under-dash fuse panel, located next to the brake pedal, contains the fuses and circuit breakers which protect the various electrical systems of your Jeep. It also houses the turn signal and hazard flashers. Fuses are replaced by simply unplugging the defective fuse and inserting a new one.

Fig. 82 Under-dash fuse panel—1992 Wrangler shown

Power Distribution Center

See Figures 83, 84 and 85

On 1992–95 models an under hood power distribution center located near the battery houses plug-in "Maxi" fuses which are used to replace the in-line fusible links used on earlier models. The power center also contains ISO relays.

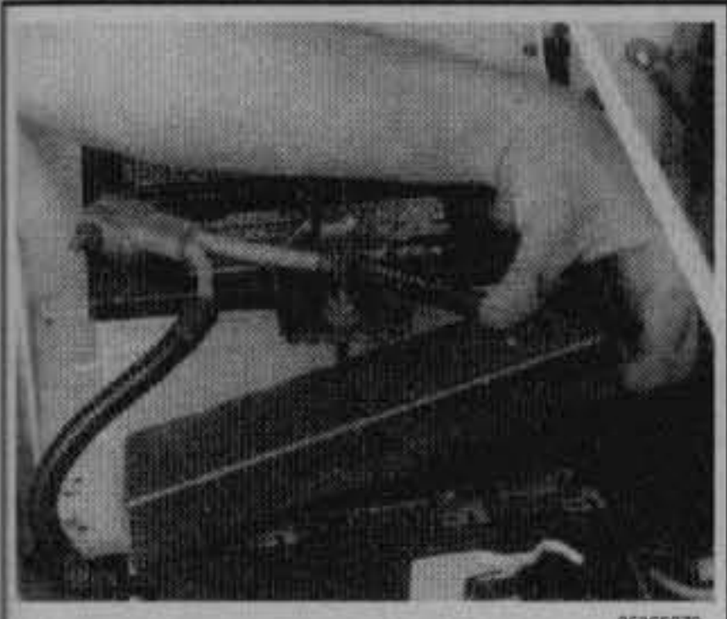

Fig. 83 Unsnap the cover from the power distribution center

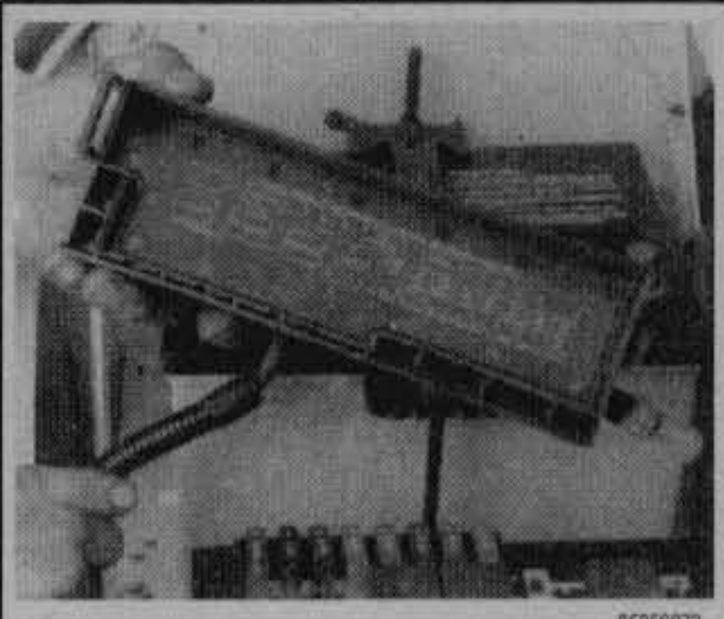

Fig. 84 The power distribution center cover identifies the fuses

Fig. 85 Plug-in "Maxi" fuses are easily removed by grasping and pulling from the power distribution center

Fusible Links

REPLACEMENT

The main wiring of the all 1987–91 vehicles covered by this manual is protected through the use of fusible links. Later models covered by this manual use "Maxi" fuses in place of these links.

♦ See Figure 86

The fuse link is a short length of special, Hypalon (high temperature) insulated wire, integral with the engine compartment wiring harness and should not be confused with standard wire. It is several wire gauges smaller than the circuit which it protects. Under no circumstances should a fuse link replacement repair be made using a length of standard wire cut from bulk stock or from another wiring harness. Repairing a blown link with regular wire would cause a hazard by removing the very circuit protection function which caused the link to blow.

1. Determine which circuit is damaged, its location and the cause of the open fuse link. If the damaged fuse link is one of three fed by a common No. 10 or 12 gauge feed wire, determine the specific affected circuit.
2. Disconnect the negative battery cable.
3. Cut the damaged fuse link from the wiring harness and discard it. If the fuse link is one of three circuits fed by a single feed wire, cut it out of the harness at each splice end and discard it.
4. Identify and procure the proper fuse link and the necessary butt connectors for attaching the fuse link to the harness.
5. To repair a fuse link in a 3-link group with one feed:
   a. After cutting the open link out of the harness, cut each of the remaining undamaged fuse links close to the feed wire weld.
   b. Strip approximately ½ in. (13mm) of insulation from the detached ends of the two good fuse links. Insert two wire ends into one end of a butt connector, then carefully push one stripped end of the replacement fuse link into the same end of the butt connector and crimp all three firmly together.

➡Care must be taken when fitting the three fuse links into the butt connector as the internal diameter is a snug fit for three wires. Make sure to use a proper crimping tool. Pliers, side cutters, etc. will not apply the proper crimp to retain the wires and withstand a pull test.

   c. After crimping the butt connector to the three fuse links, cut the weld portion from the feed wire and strip approximately ½ in. (13mm) of insulation from the cut end. Insert the stripped end into the open end of the butt connector and crimp very firmly.
   d. To attach the remaining end of the replacement fuse link, strip approximately ½ in. (13mm) of insulation from the wire end of the circuit from which the blown fuse link was removed, and firmly crimp a butt connector or equivalent to the stripped wire. Then, insert the end of the replacement link into the other end of the butt connector and crimp firmly.
   e. Using rosin core solder with a consistency of 60 percent tin and 40 percent lead, solder the connectors and the wires at the repairs then insulate with electrical tape.
6. To replace a fuse link on a single circuit in a harness, cut out the damaged portion, strip approximately ½ in. (13mm) of insulation from the two wire ends and attach the appropriate replacement fuse link to the stripped wire ends with two proper size butt connectors. Solder the connectors and wires, then insulate the tape.
7. To repair a fuse link which has an eyelet terminal on one end (such as the charging circuit), cut off the open fuse link behind the weld, strip approximately ½ in. (13mm) of insulation from the cut end and attach the appropriate new eyelet fuse link to the cut stripped wire with an appropriate size butt connector. Solder the connectors and wires at the repair, then insulate with tape.
8. Connect the negative battery cable to the battery and test the system for proper operation.

➡Do not mistake a resistor wire for a fuse link. The resistor wire is generally longer and usually has print stating, "Resistor: don't cut or splice."

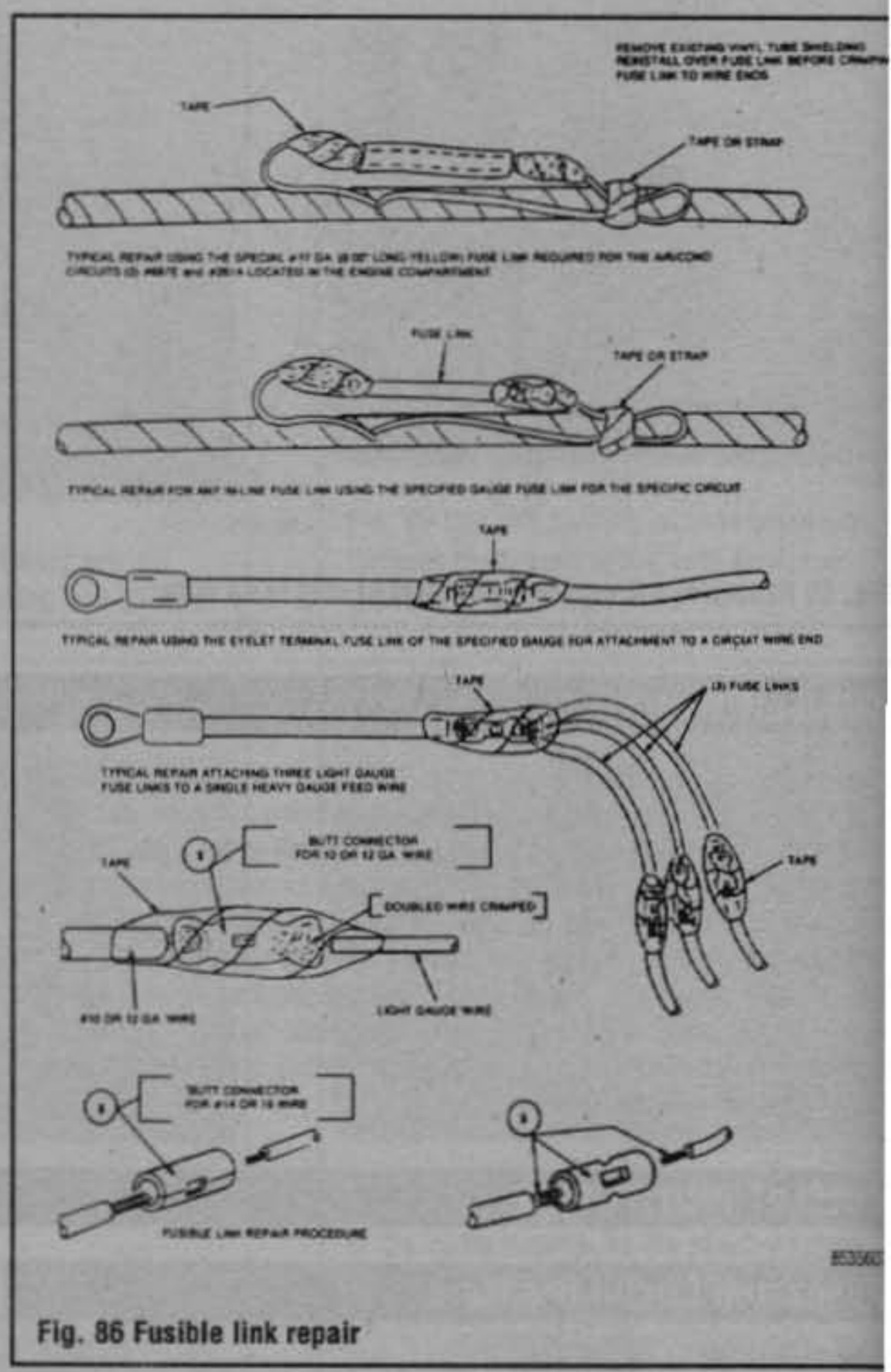

Fig. 86 Fusible link repair

WIRING DIAGRAMS

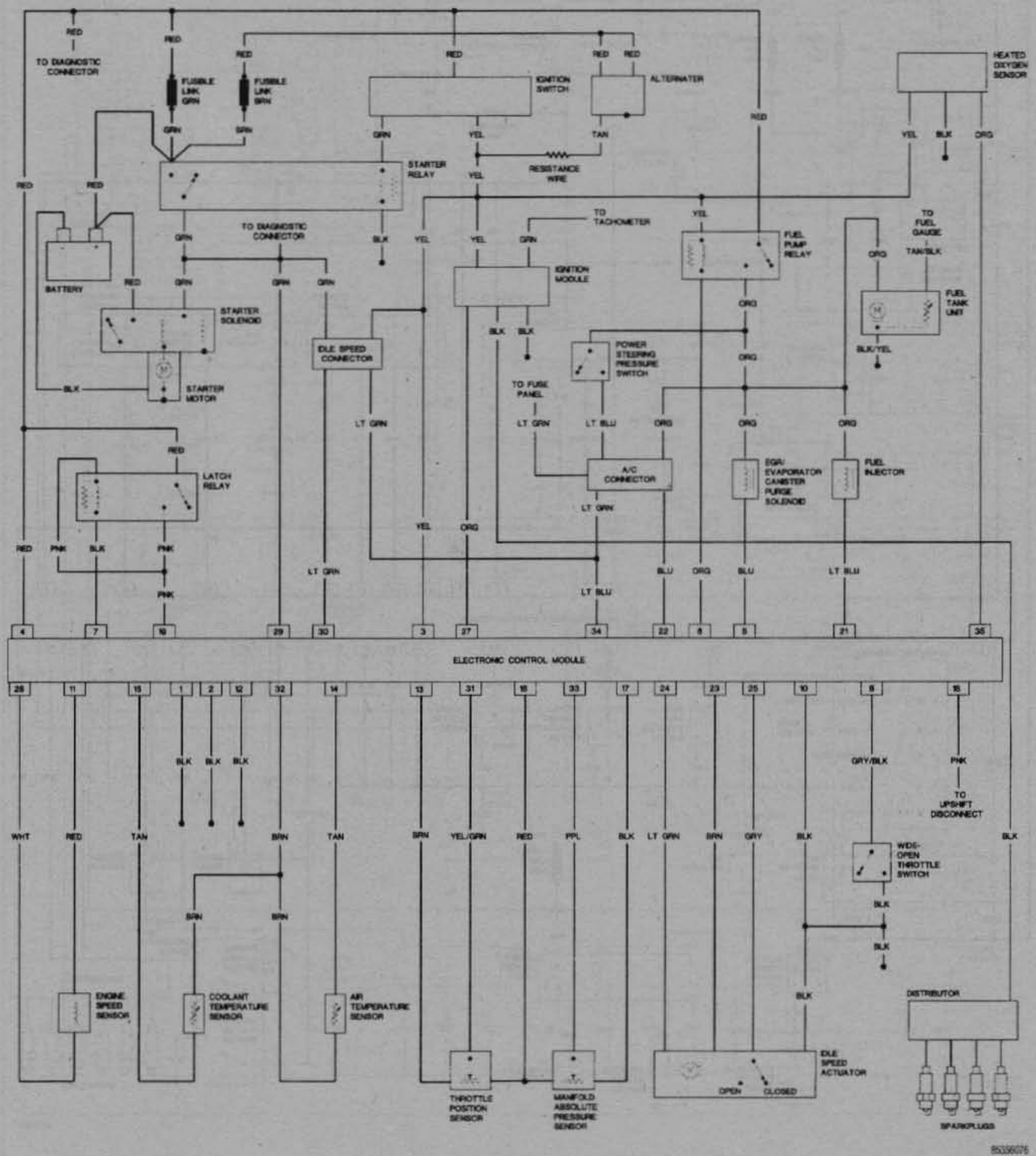

Fig. 87 Engine controls—1987 with 2.5L engine

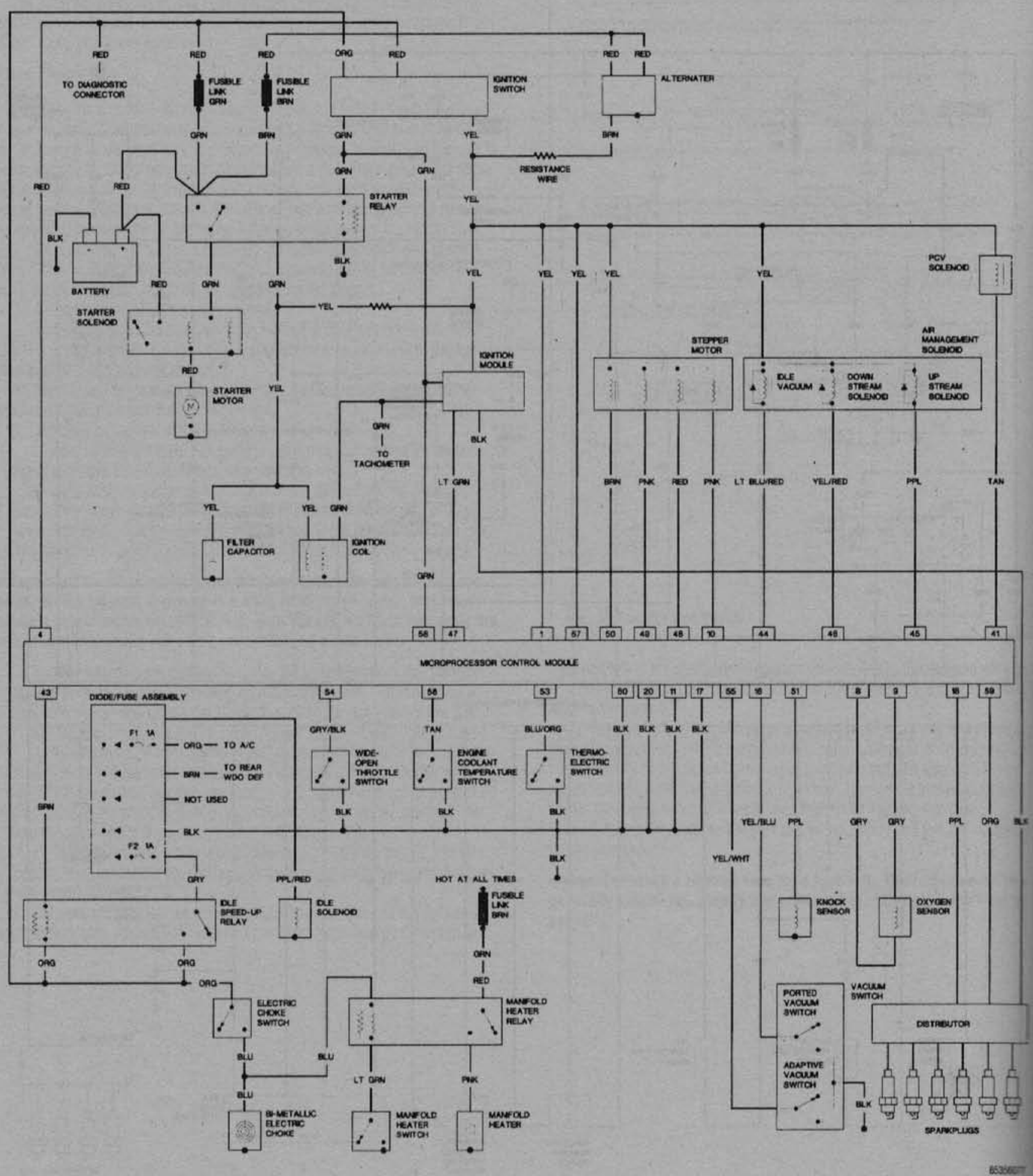

Fig. 88 Engine controls—1987 with 4.2L engine

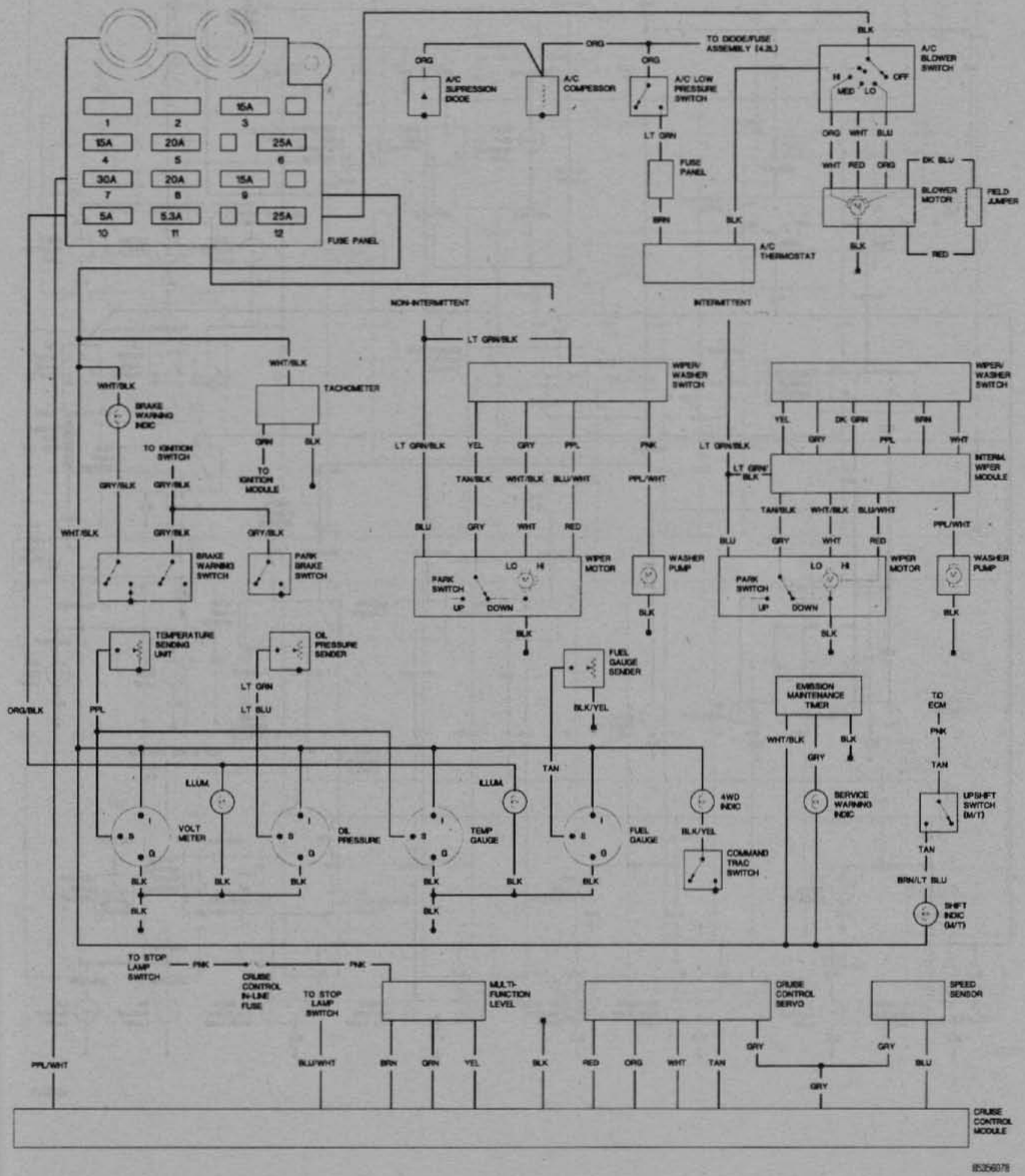

Fig. 89 Body—1987 Wrangler

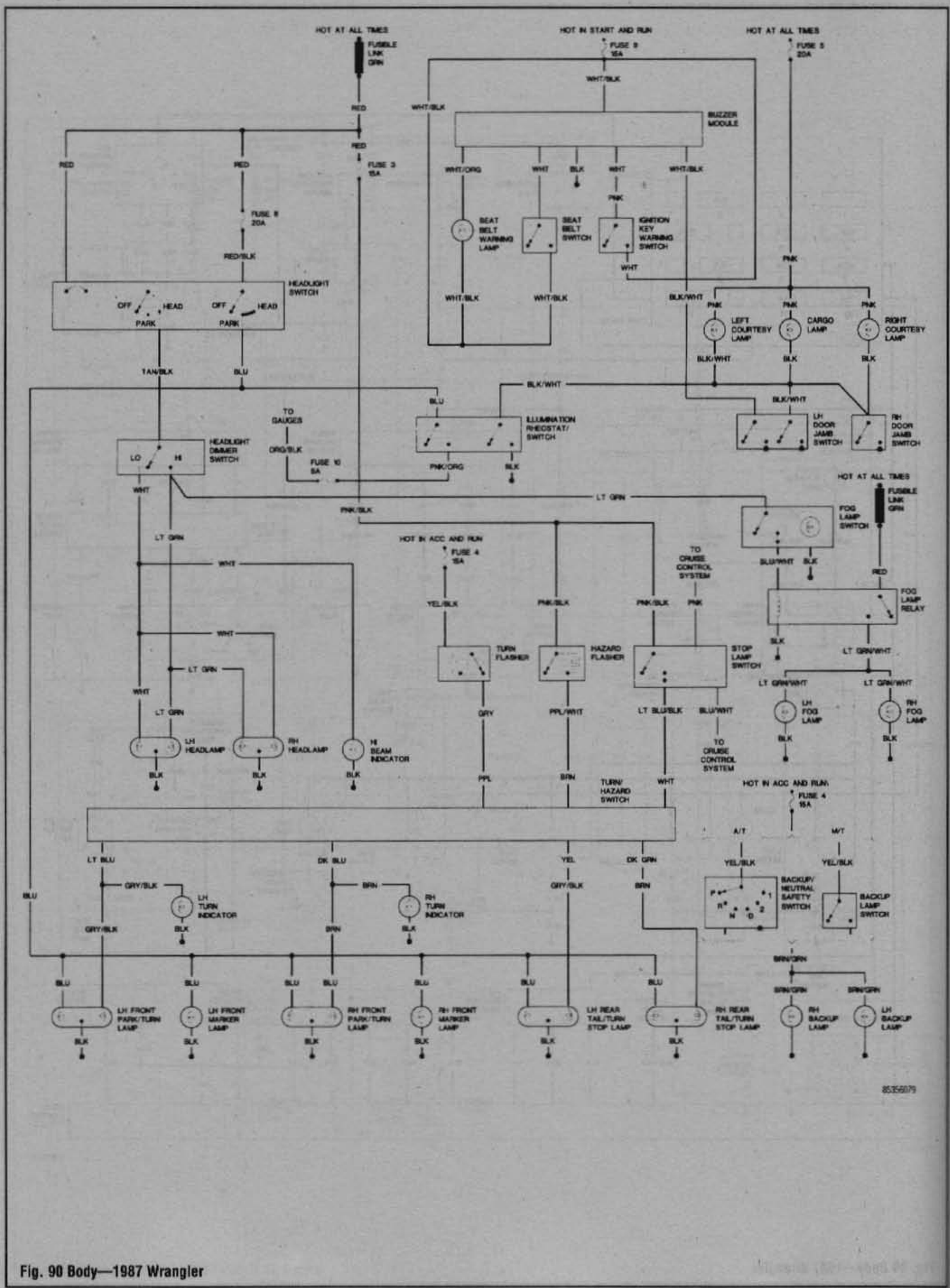

Fig. 90 Body—1987 Wrangler

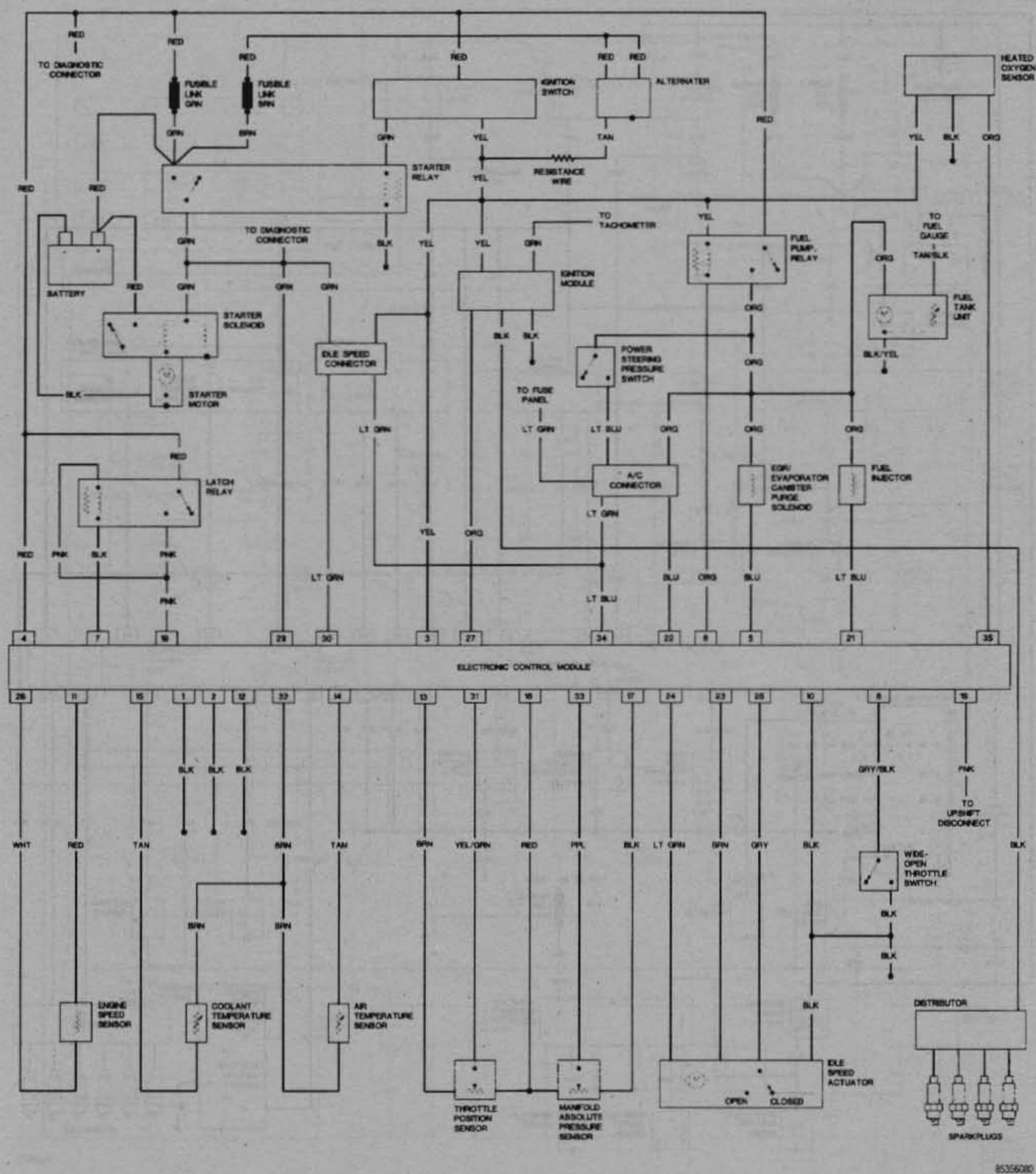

Fig. 91 Engine controls—1988 with 2.5L engine

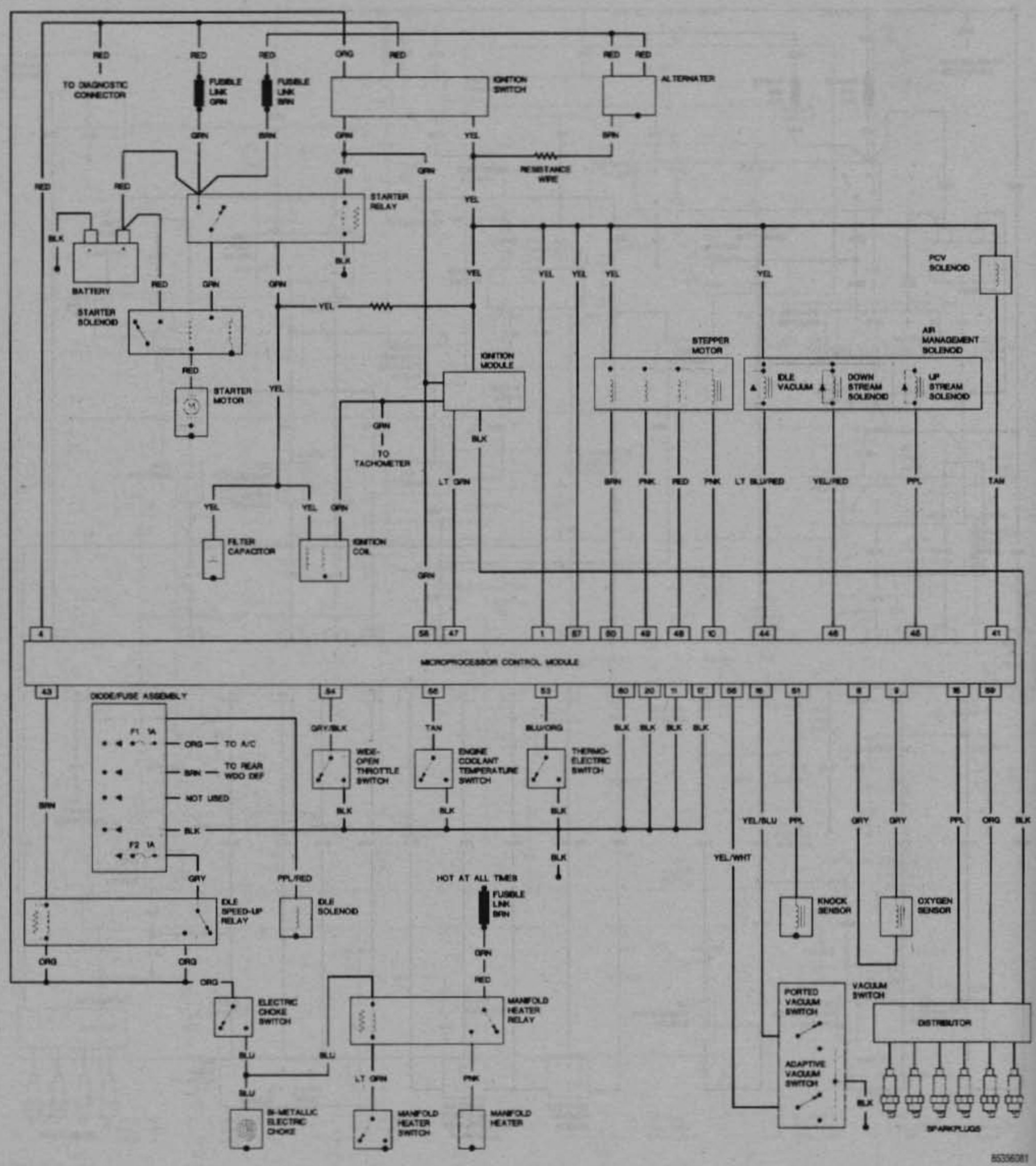

Fig. 92 Engine controls—1988 with 4.2L engine

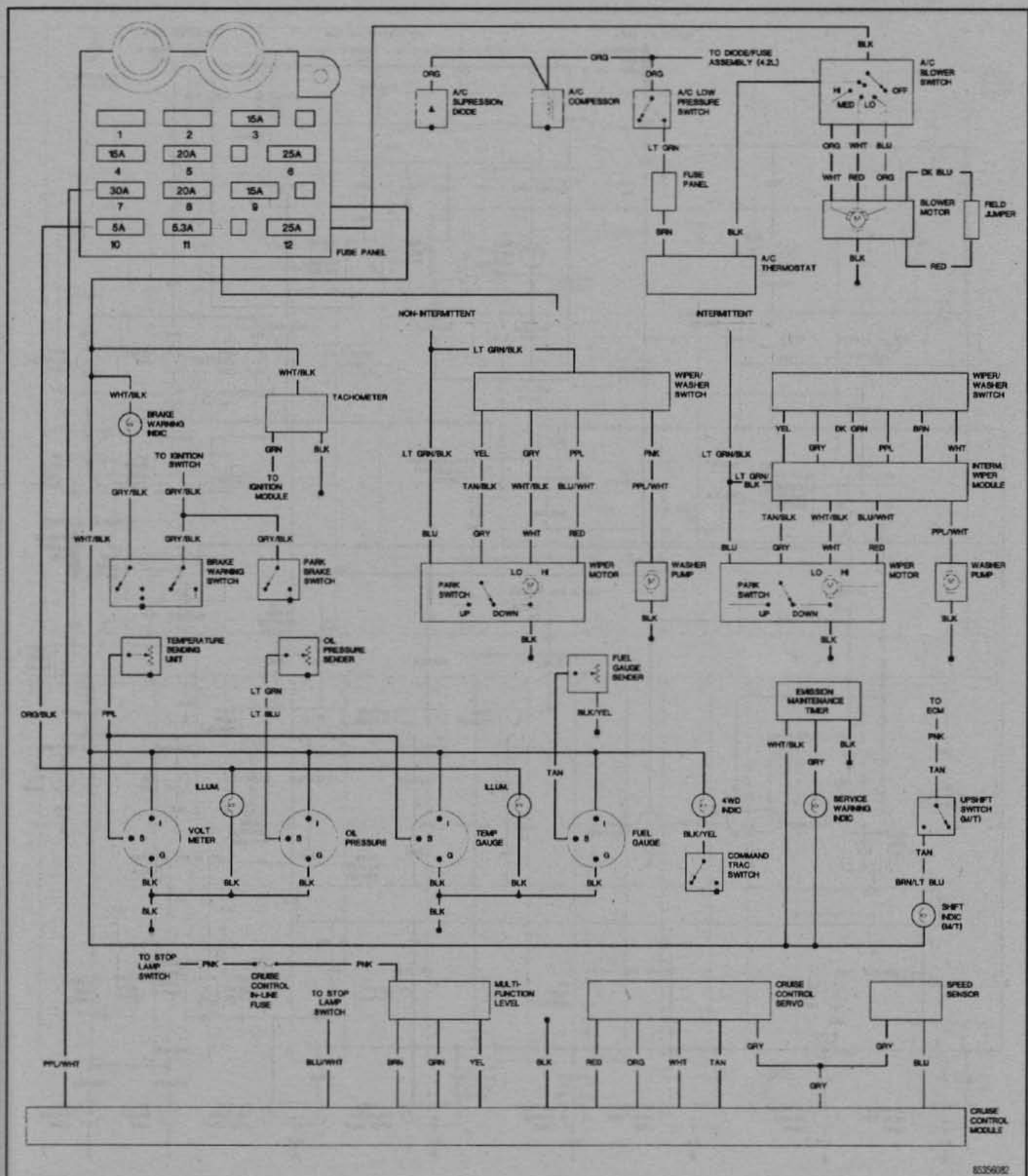

Fig. 93 Body—1988 Wrangler

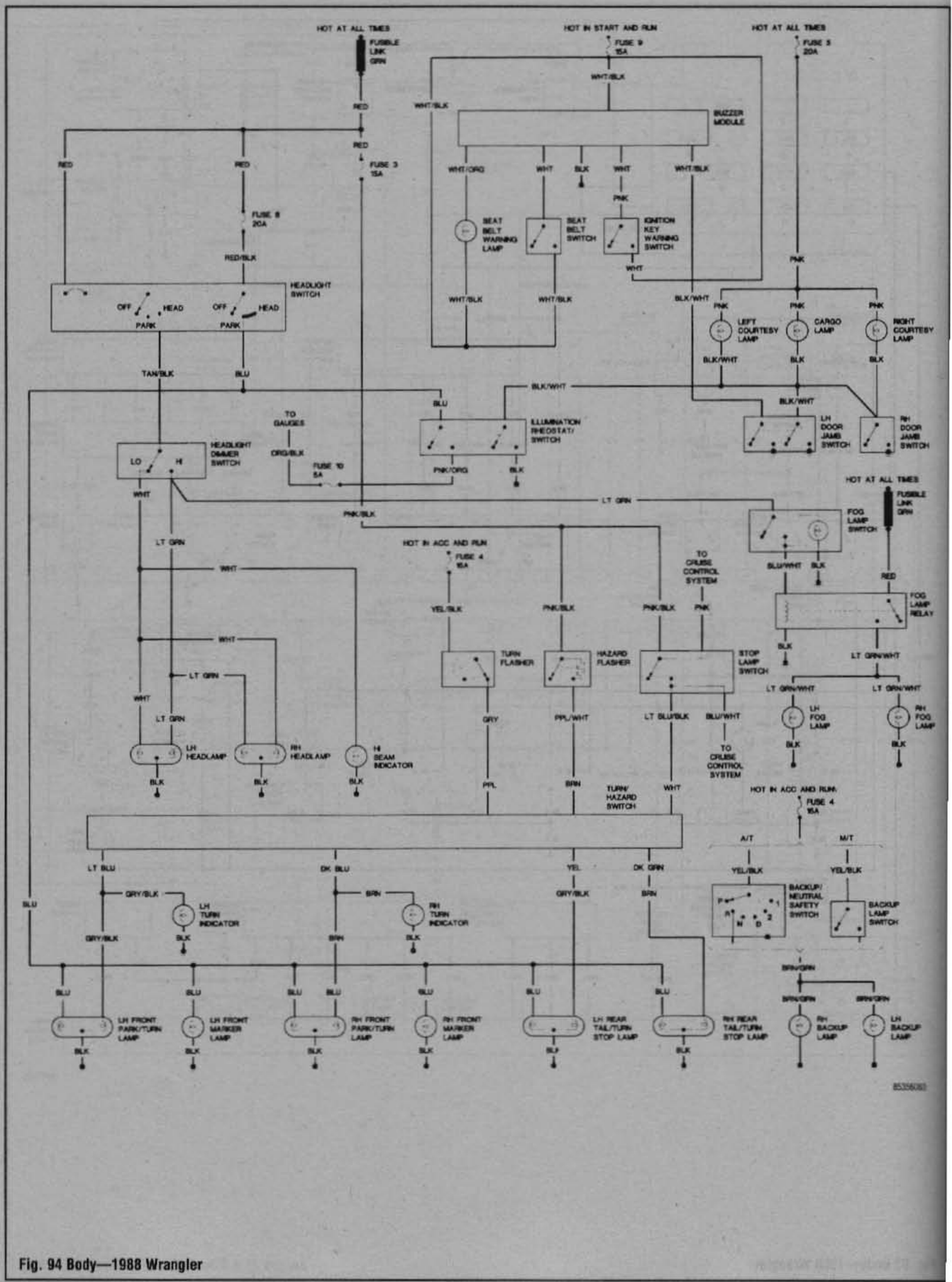

Fig. 94 Body—1988 Wrangler

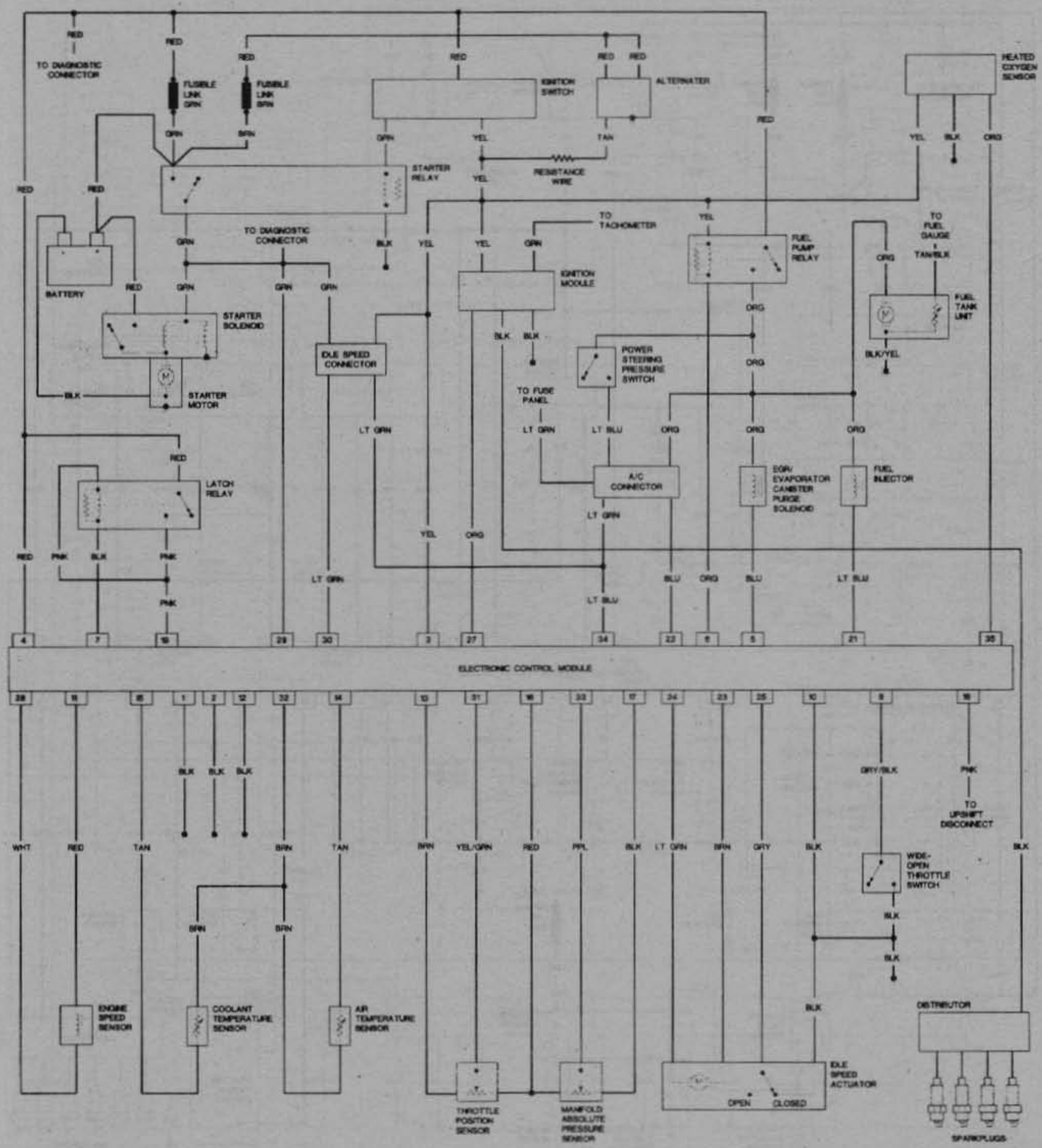

Fig. 95 Engine controls—1989 with 2.5L engine

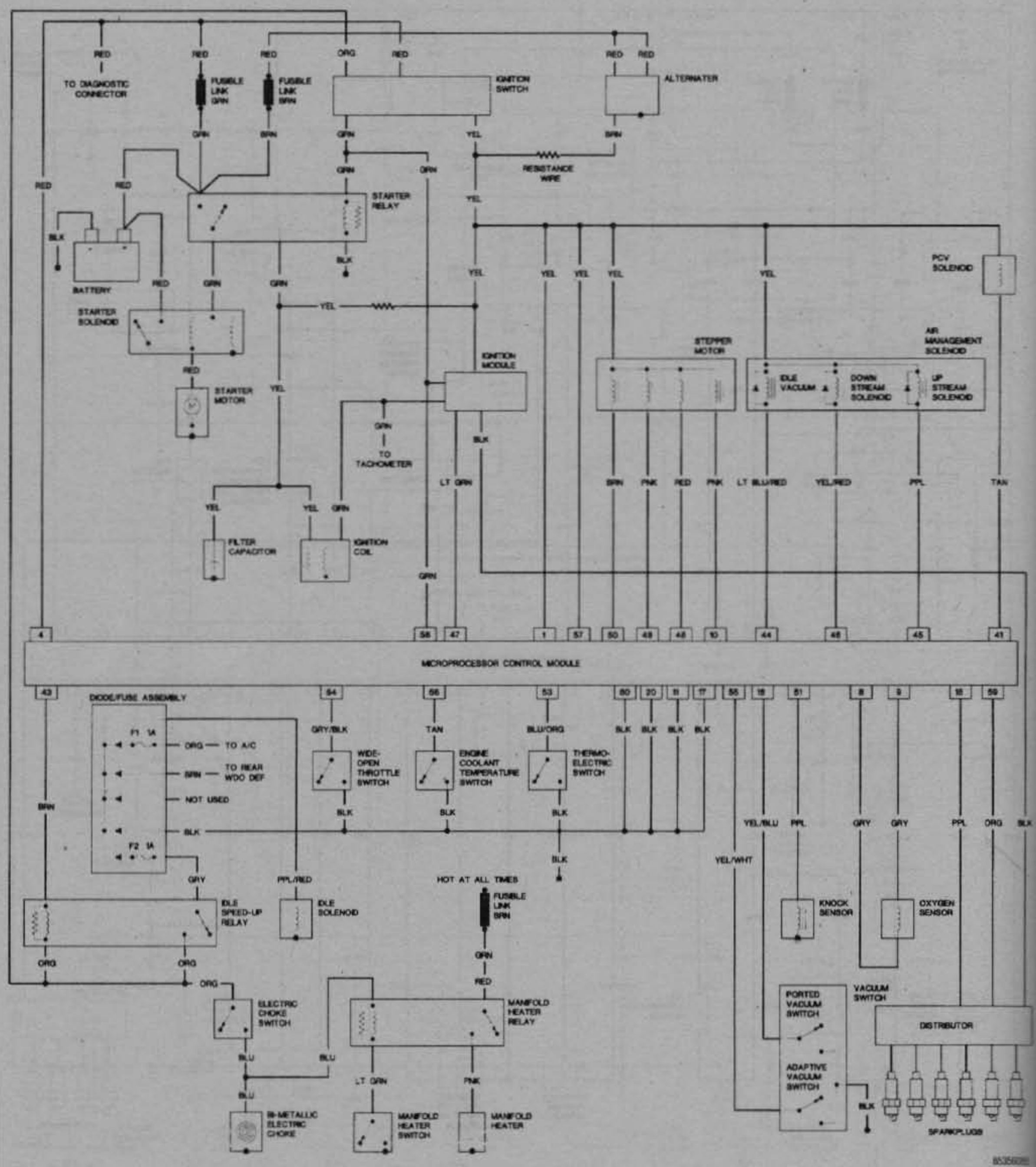

Fig. 96 Engine controls—1989 with 4.2L engine

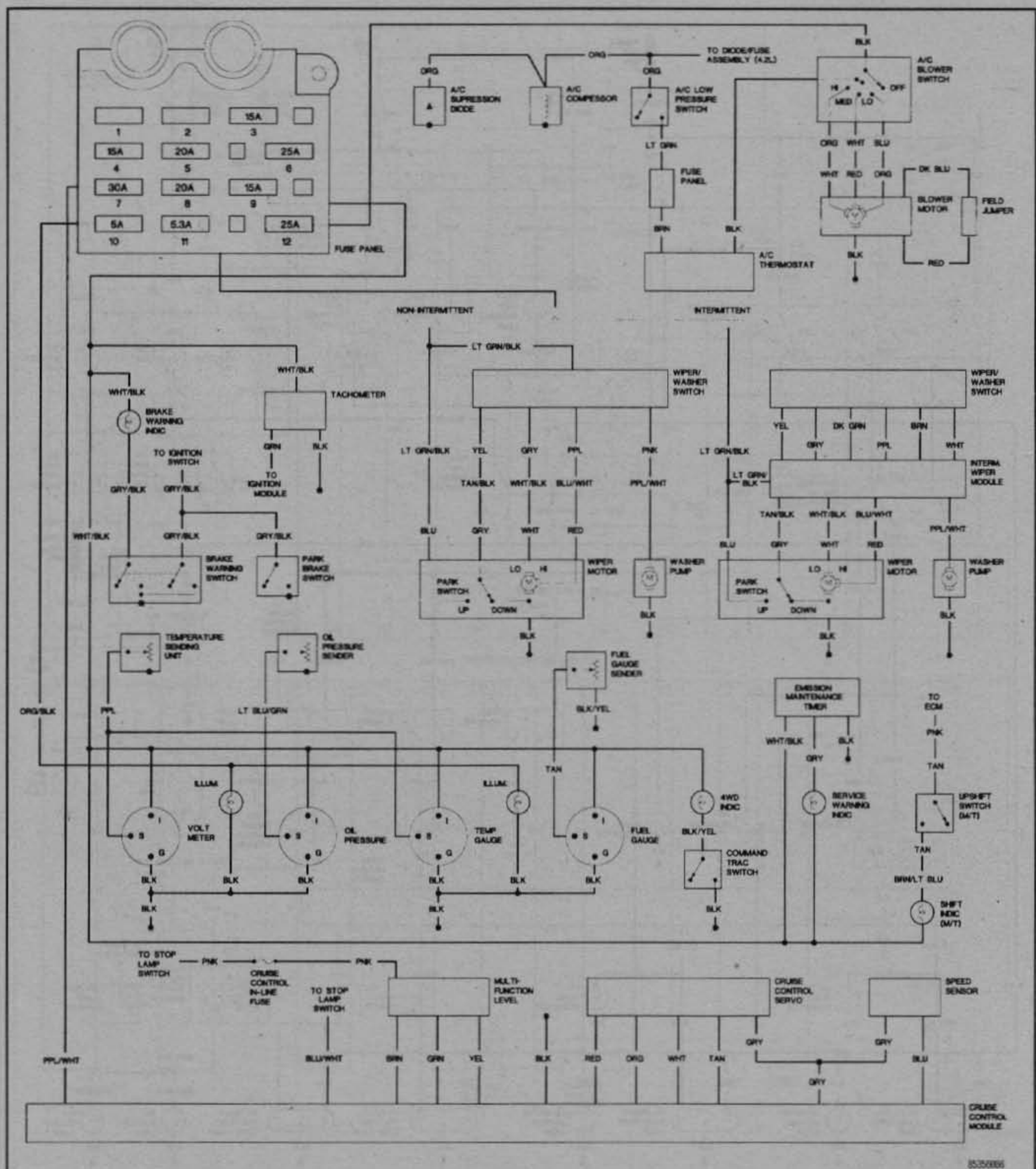

Fig. 97 Body—1989 Wrangler

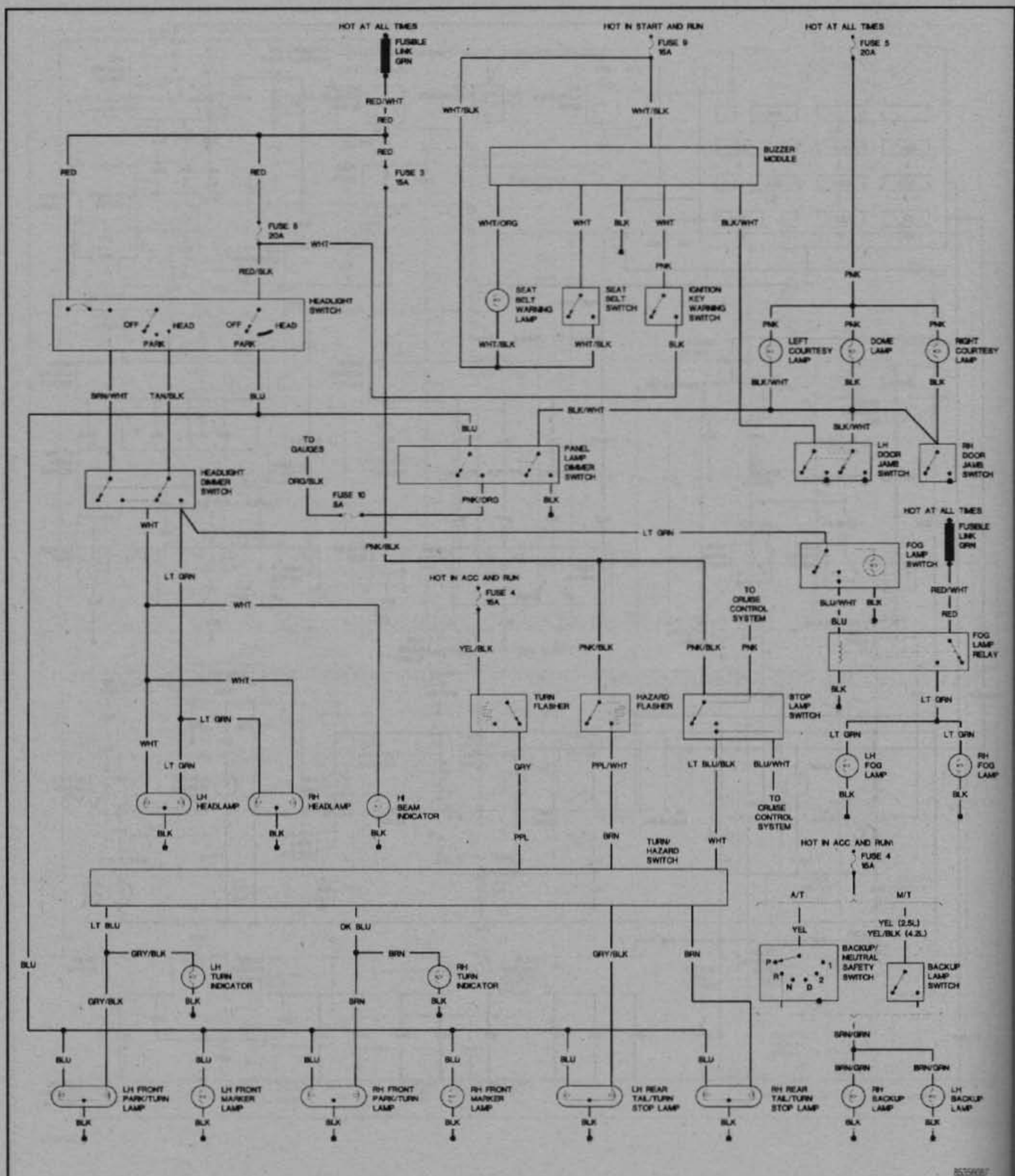

Fig. 98 Body—1989 Wrangler

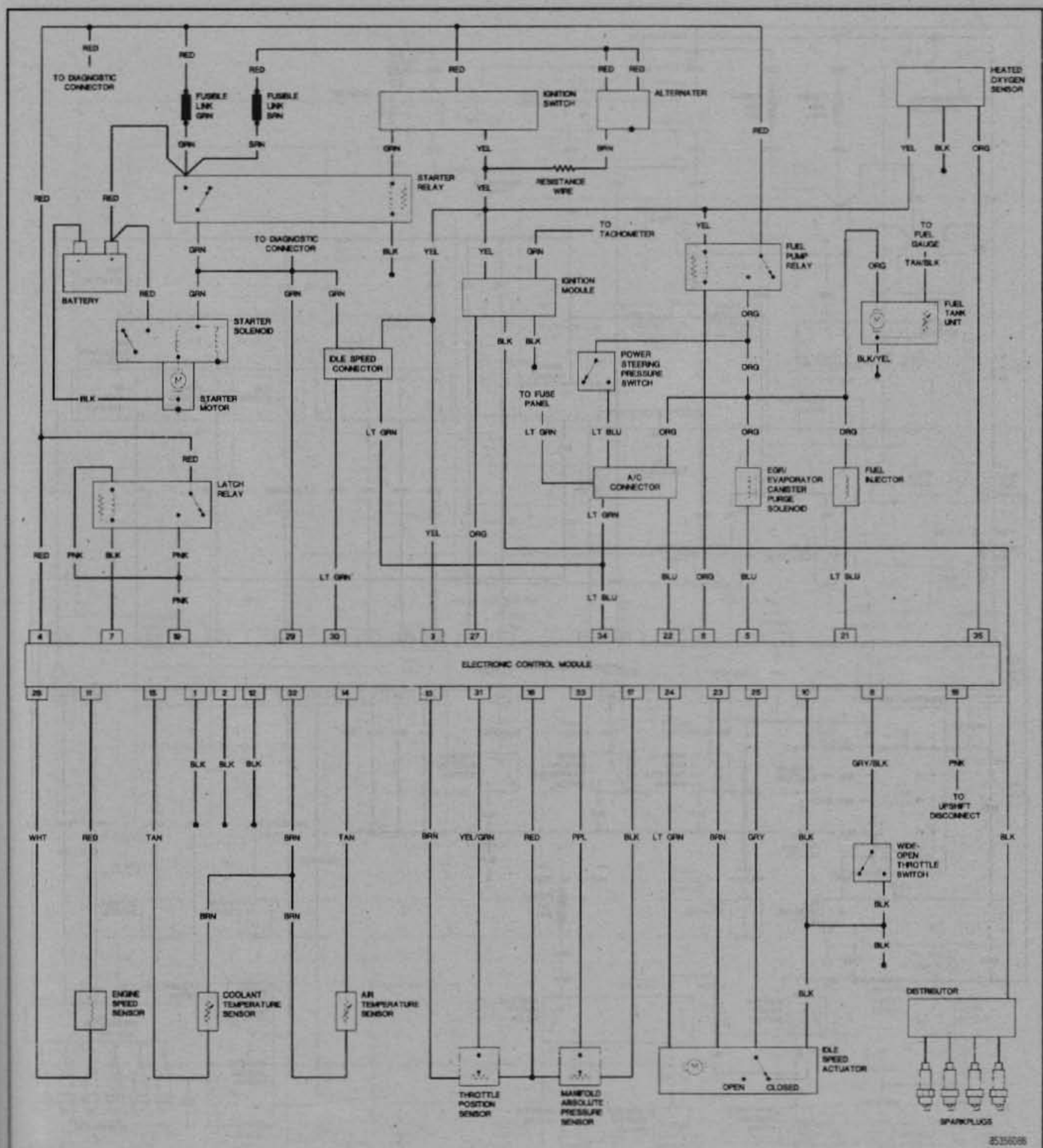

Fig. 99 Engine controls—1990 with 2.5L engine

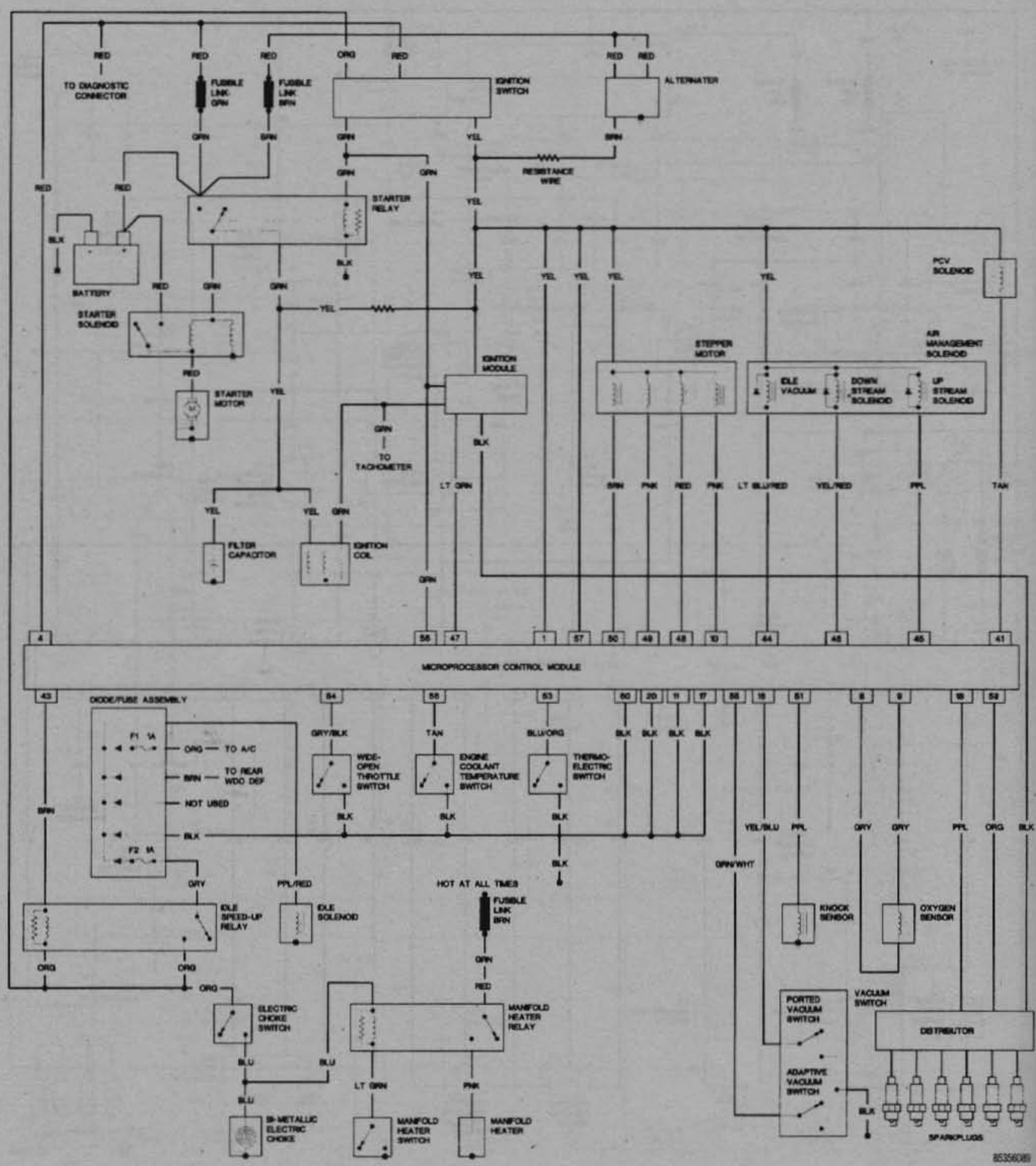

Fig. 100 Engine controls—1990 with 4.2L engine

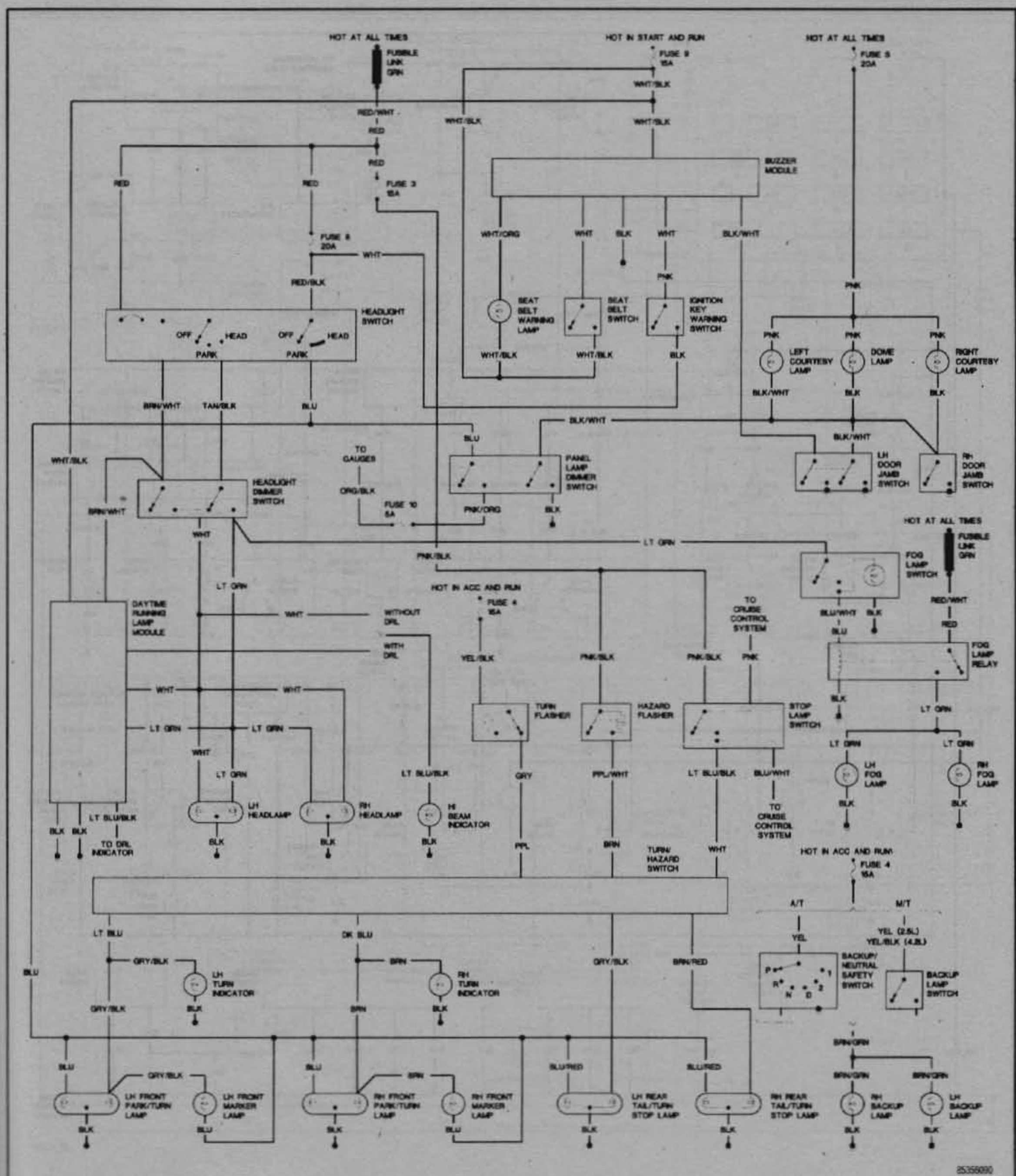

Fig. 101 Body—1990 Wrangler

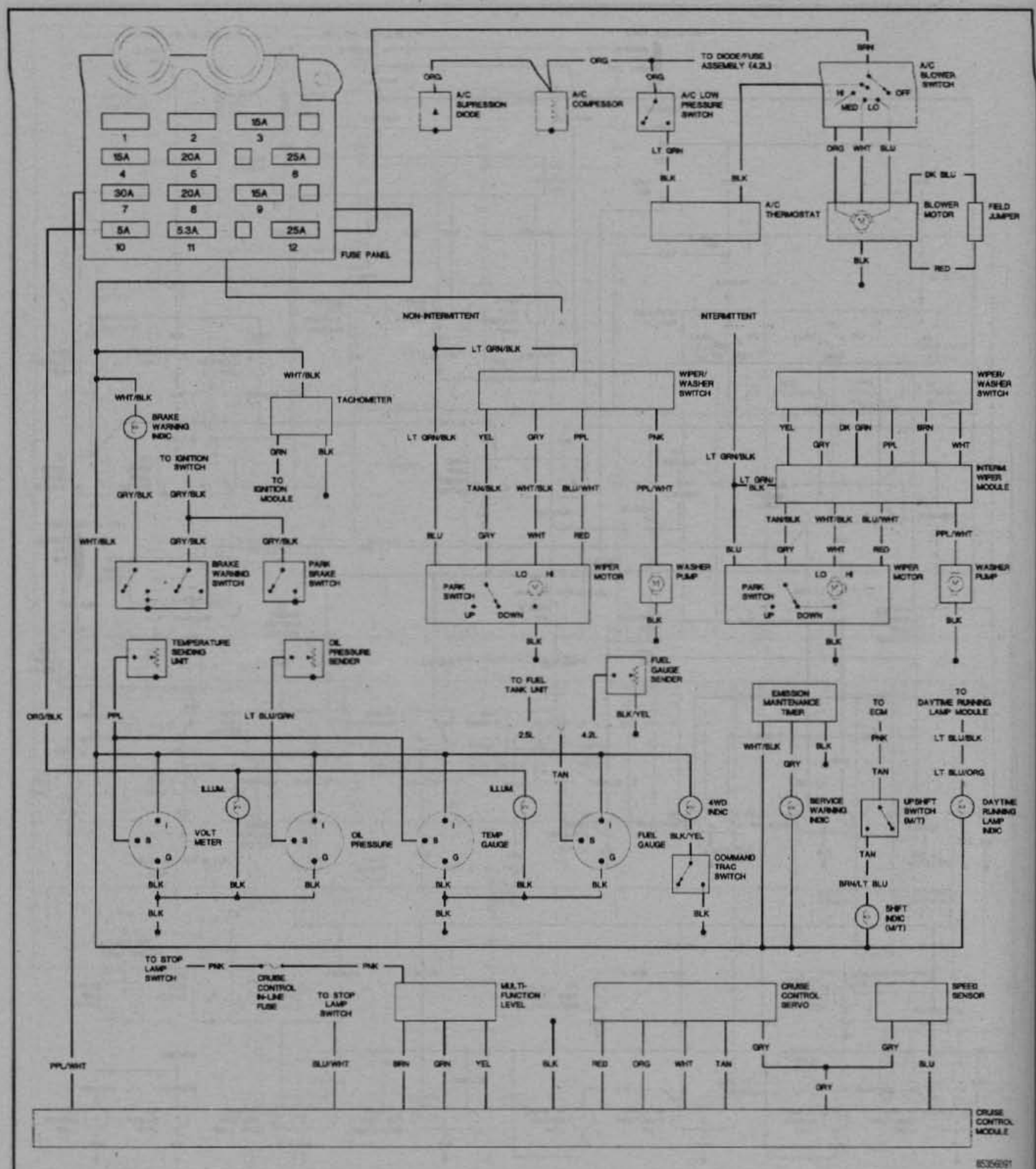

Fig. 102 Body—1990 Wrangler

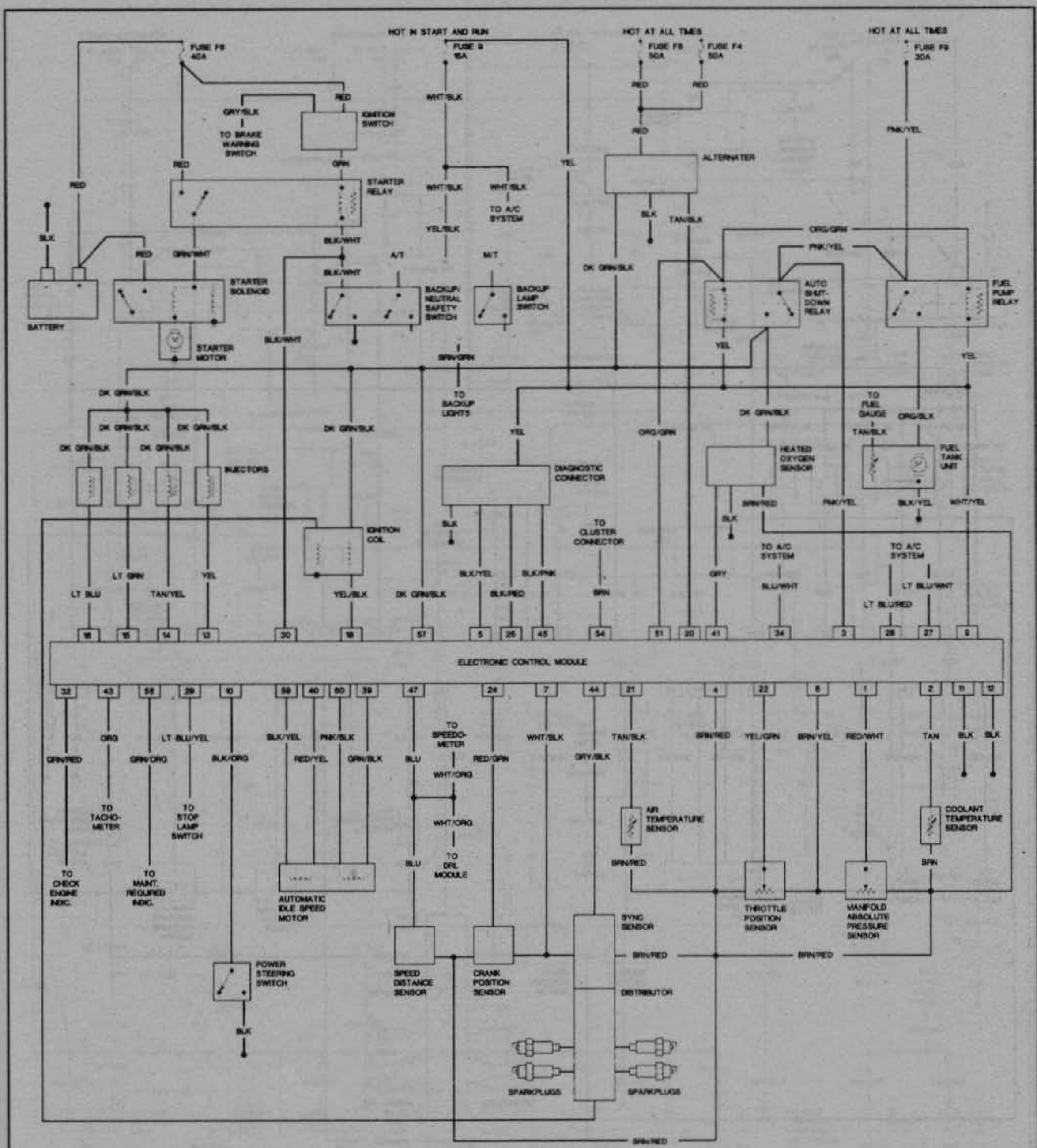

Fig. 103 Engine controls—1991 with 2.5L engine

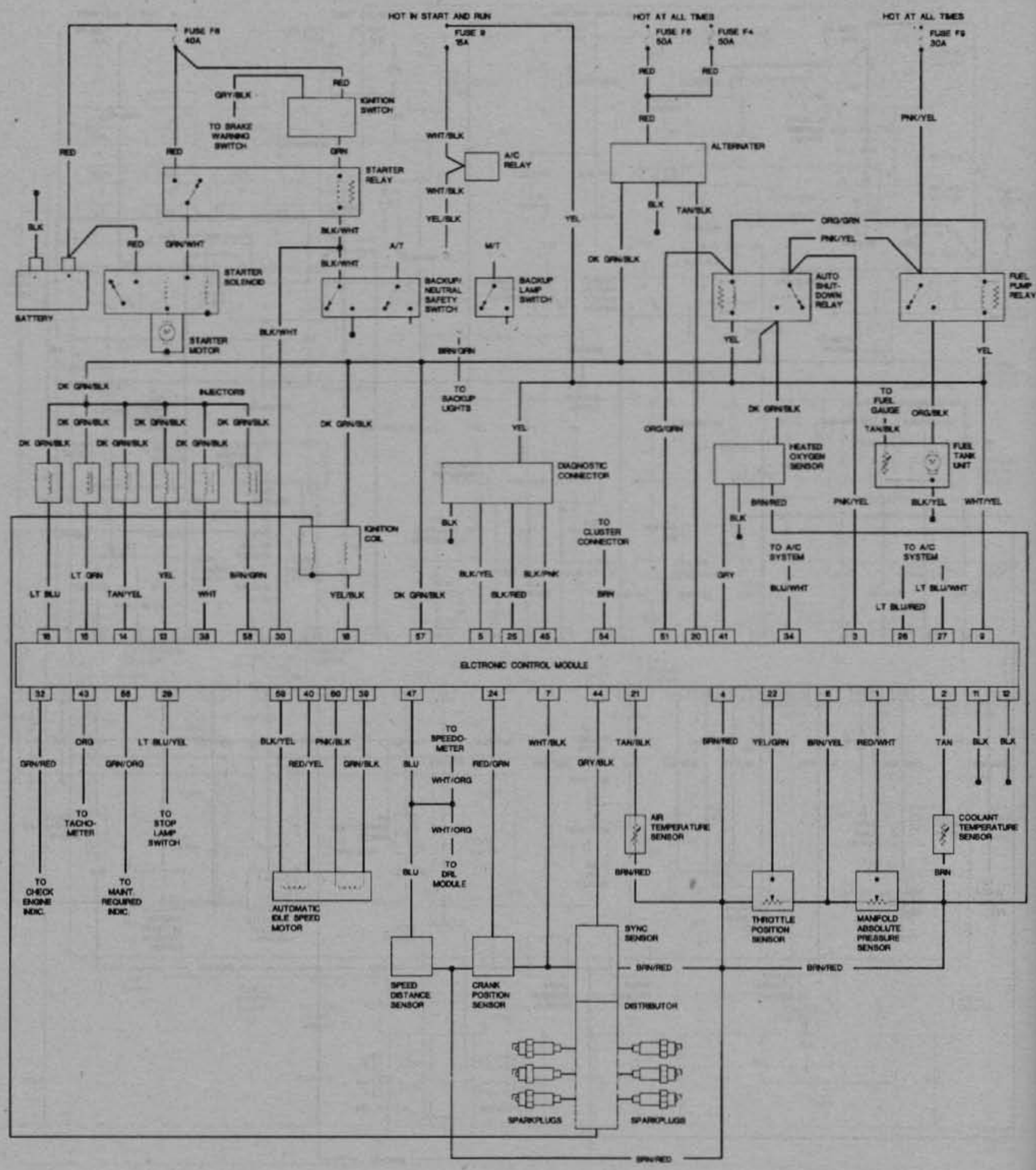

Fig. 104 Engine controls—1991 with 4.0L engine

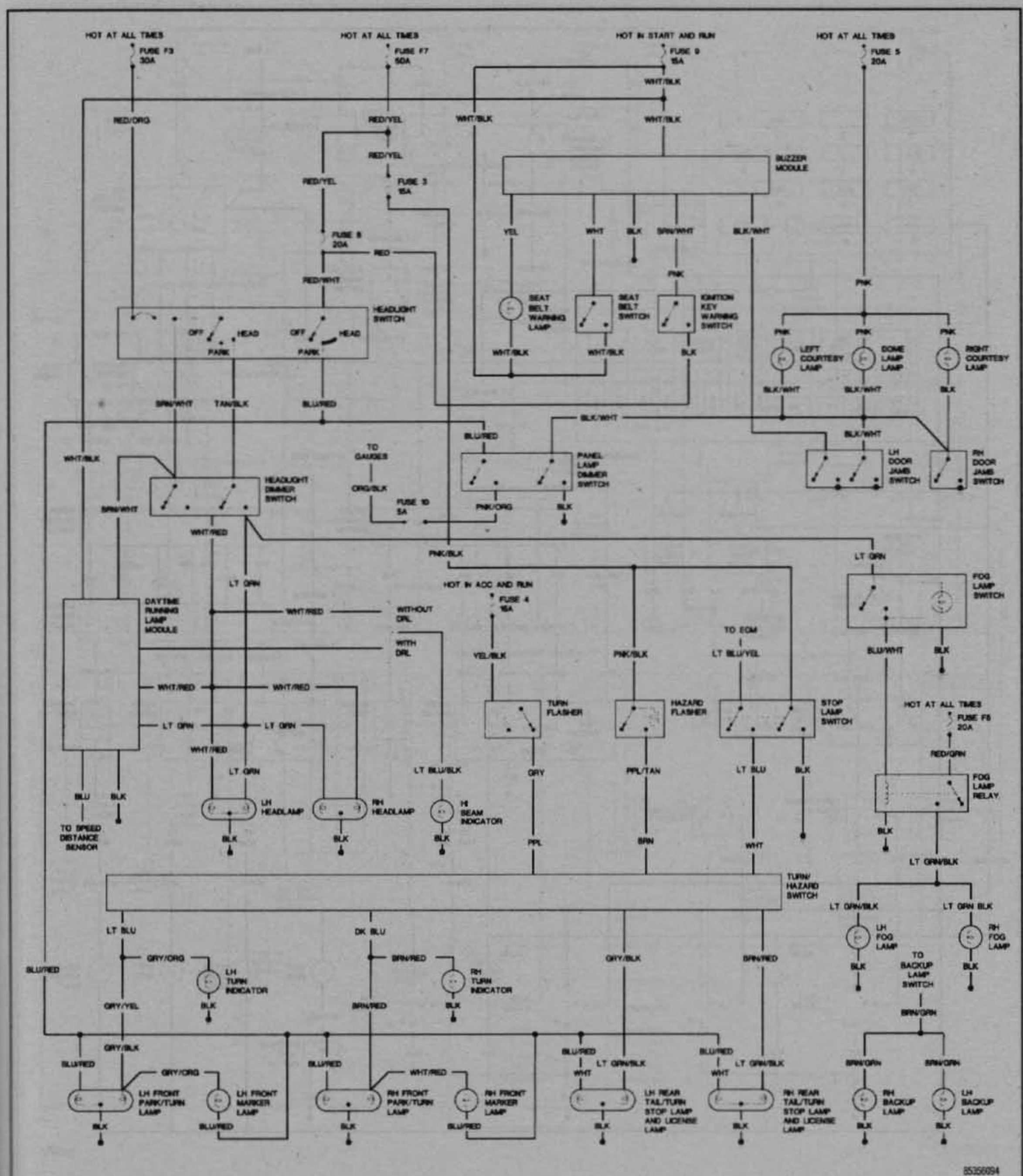

Fig. 105 Body—1991 Wrangler

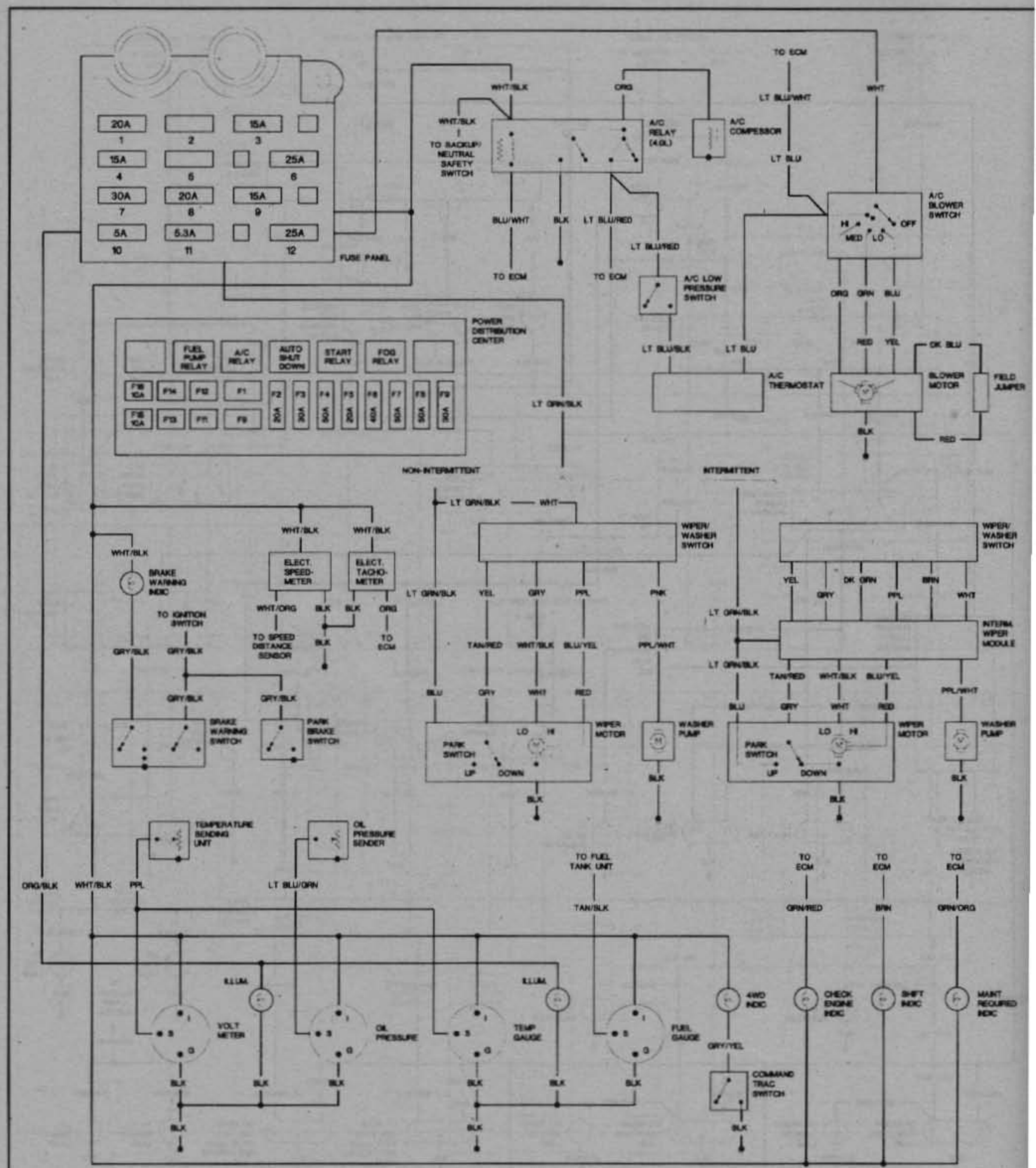

Fig. 106 Body—1991 Wrangler

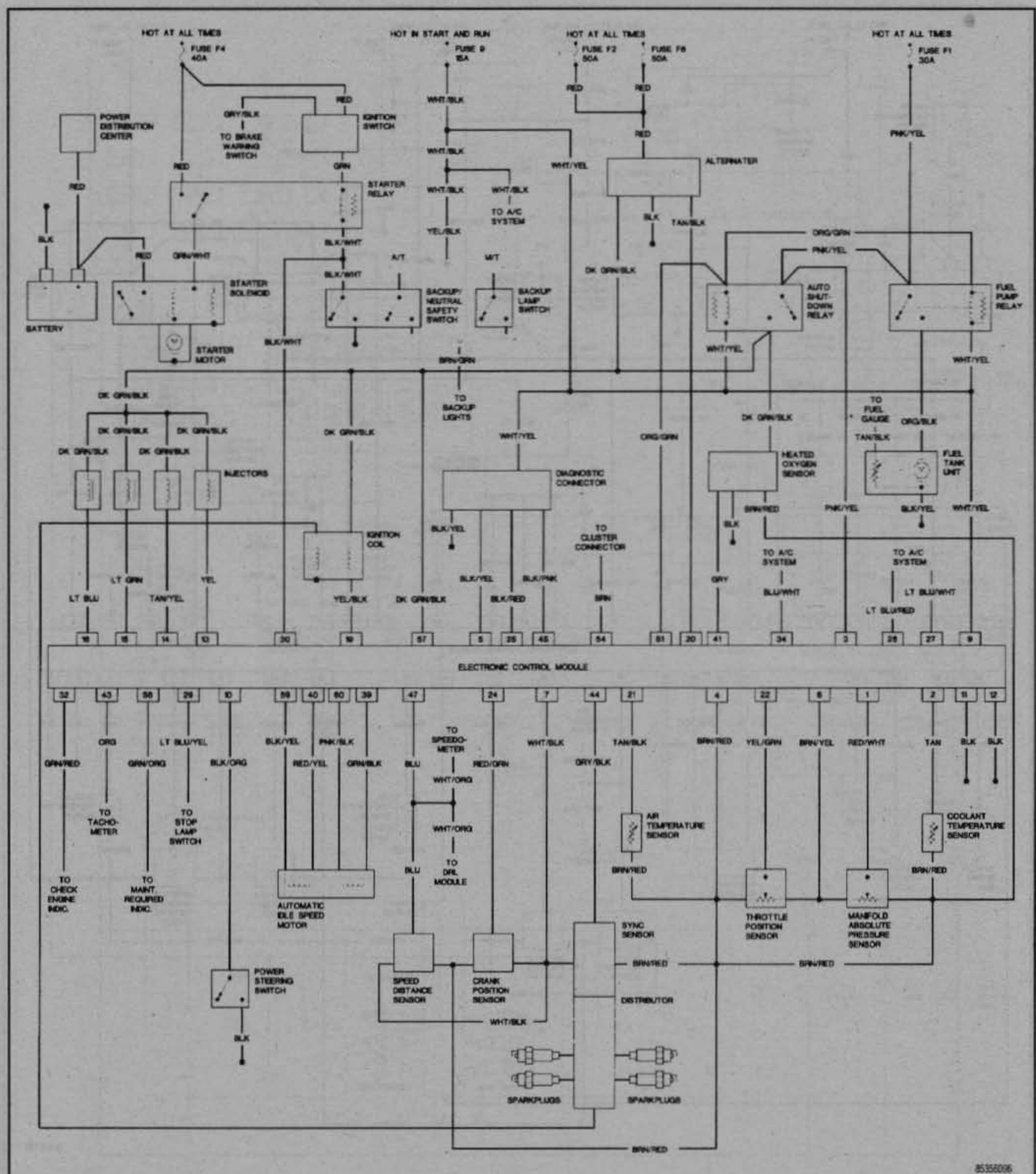

Fig. 107 Engine controls—1992 with 2.5L engine

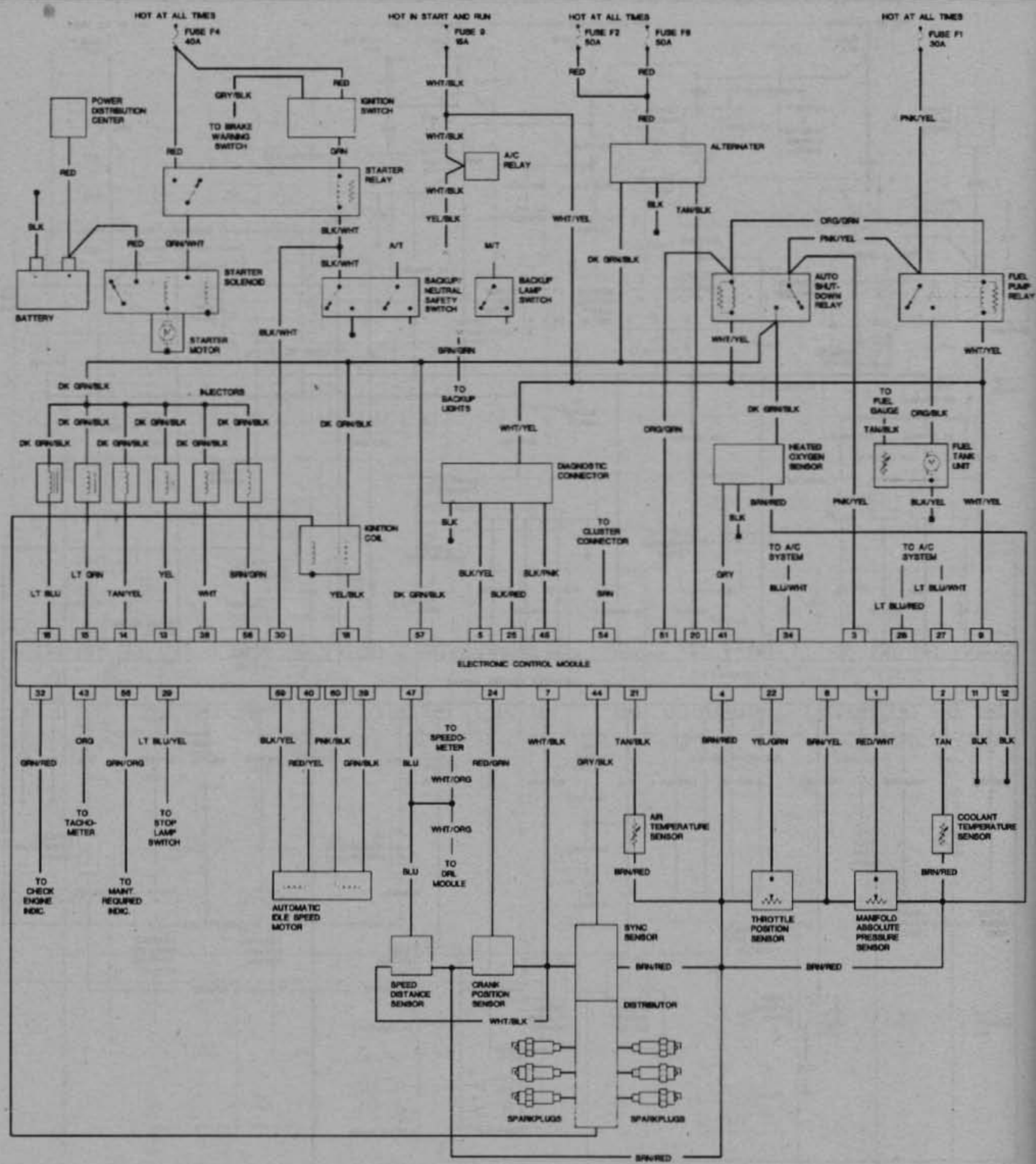

Fig. 108 Engine controls—1992 with 4.0L engine

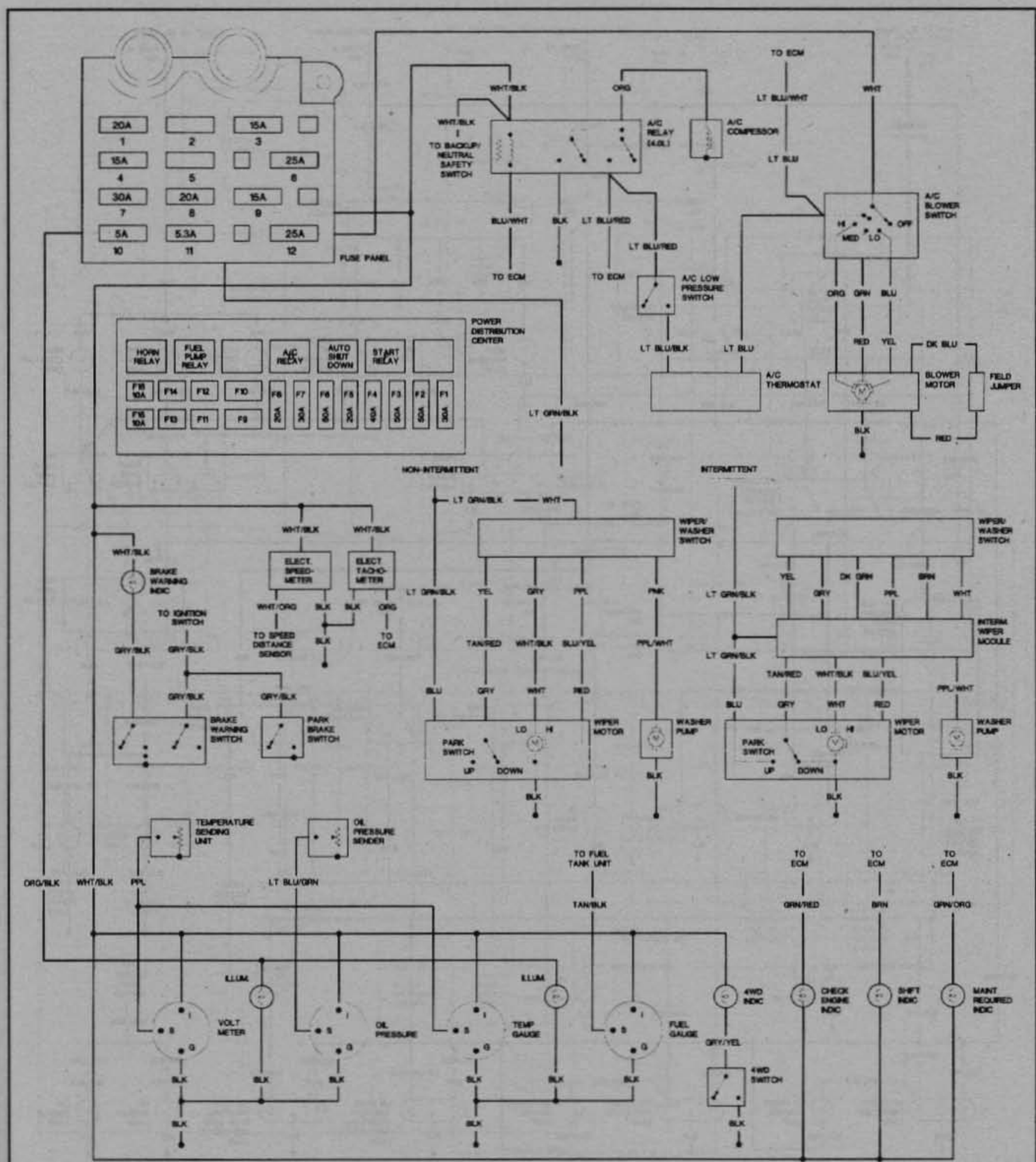

Fig. 109 Body—1992 Wrangler

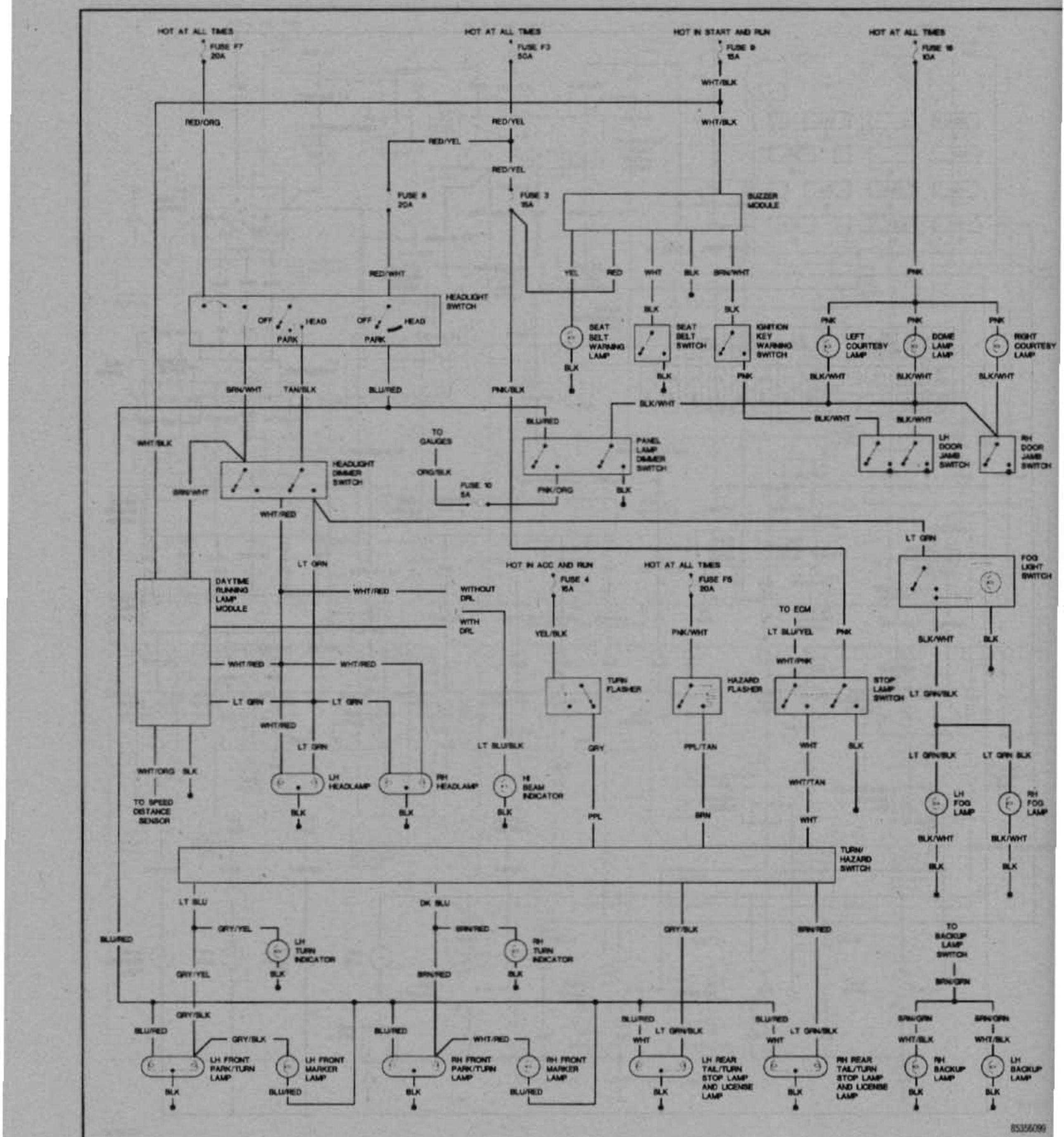

Fig. 110 Body—1992 Wrangler

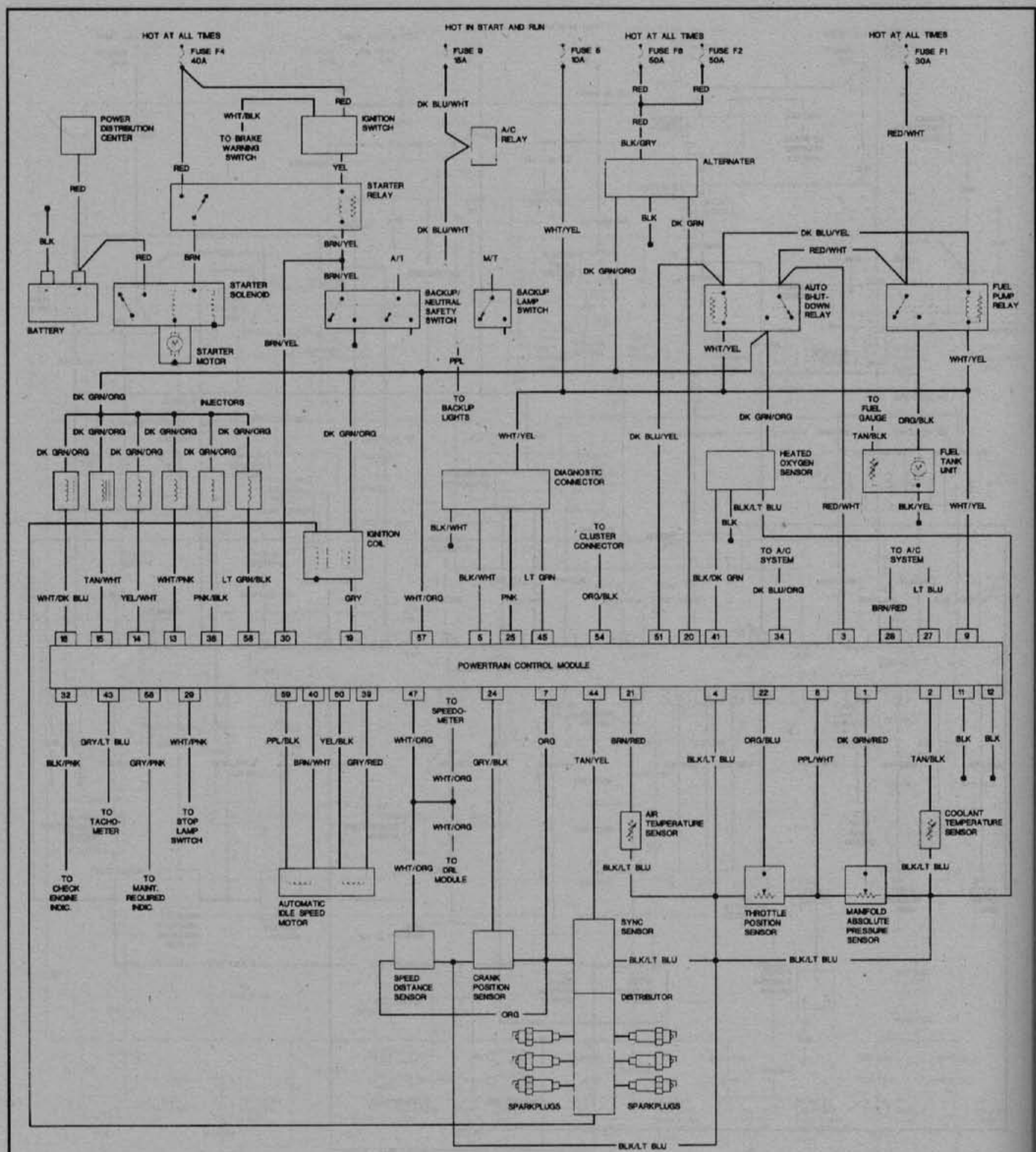

Fig. 112 Engine controls—1993 with 4.0L engine

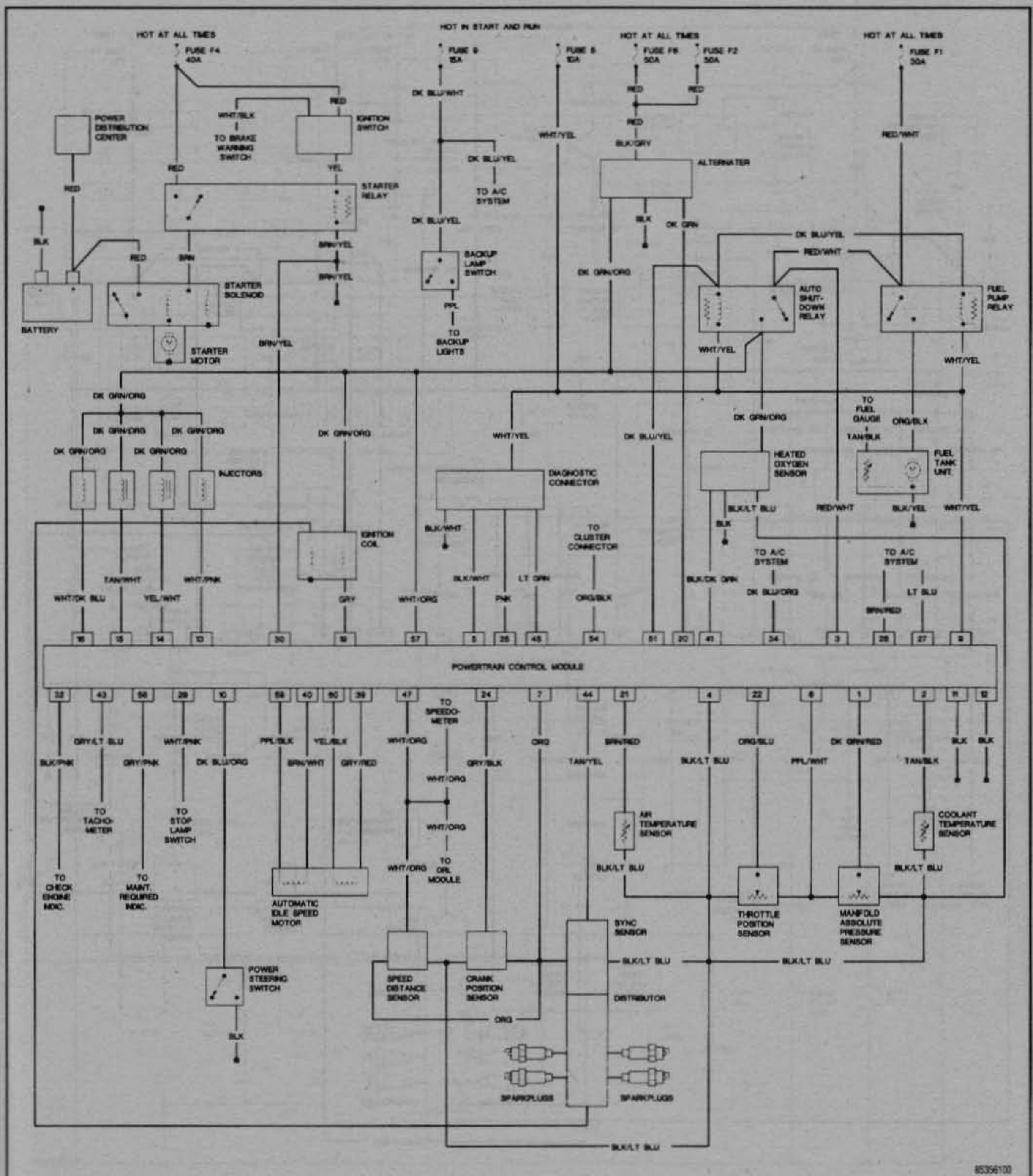

Fig. 111 Engine controls—1993 with 2.5L engine

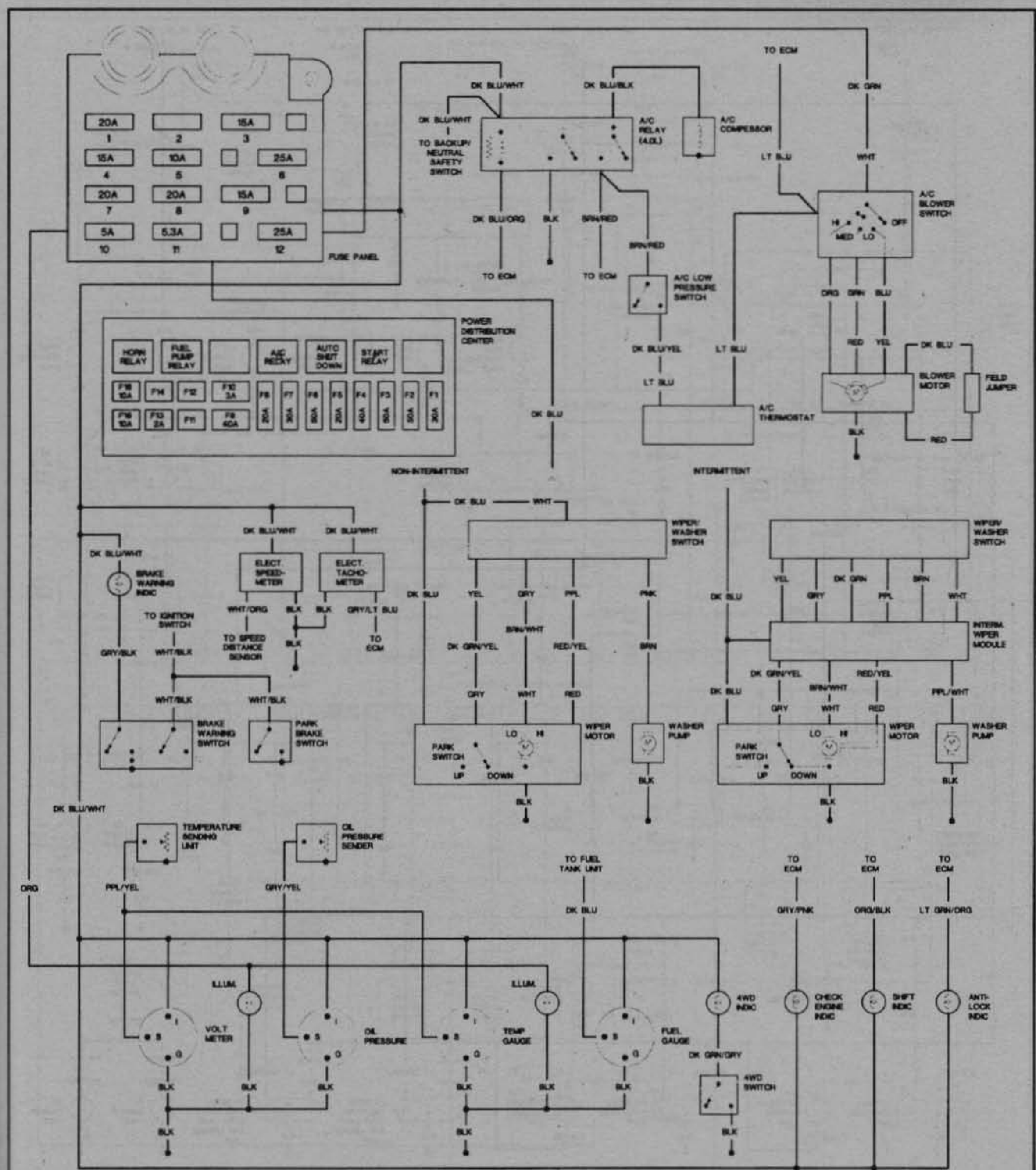

Fig. 113 Body—1993 Wrangler

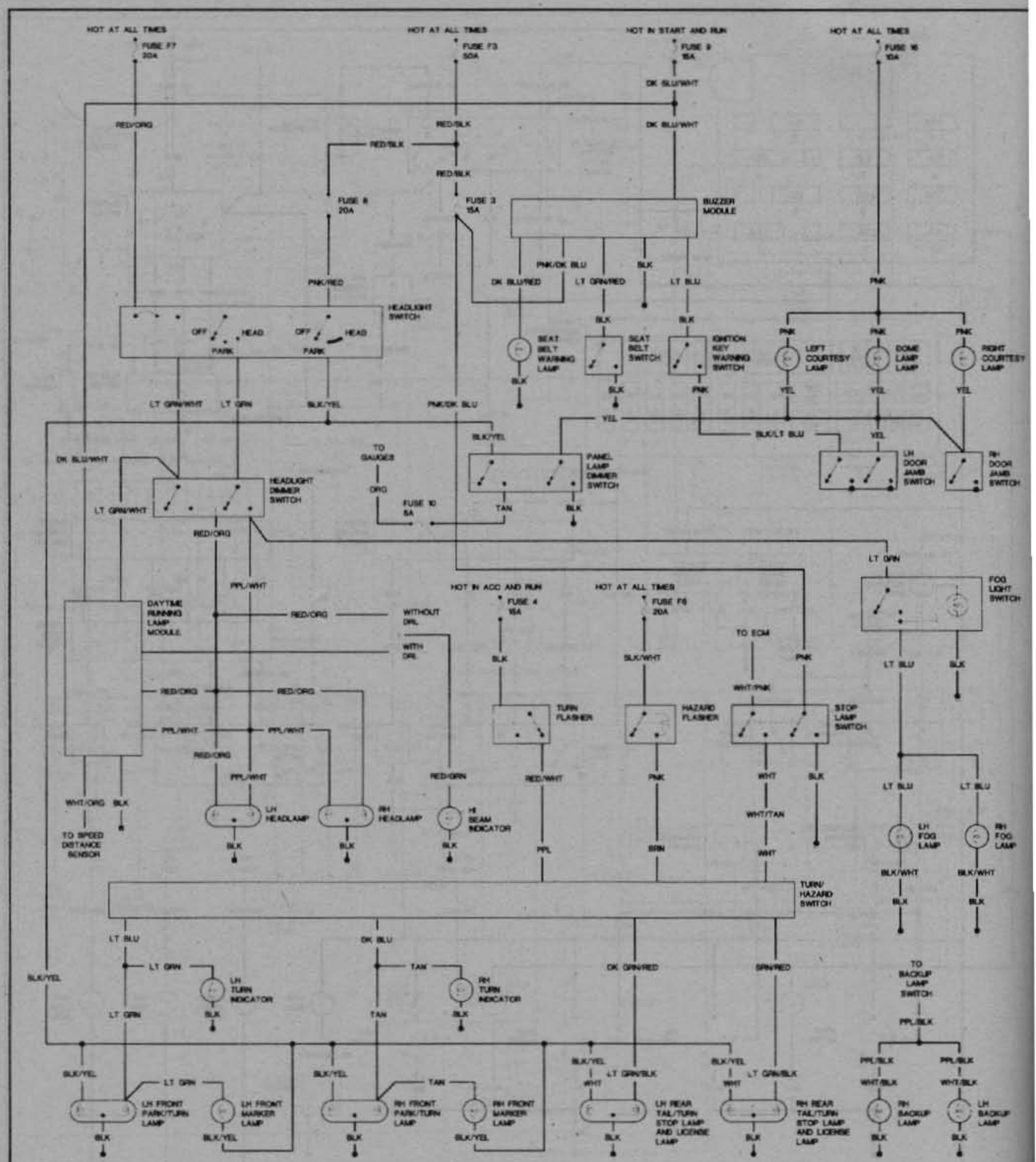

Fig. 114 Body—1993 Wrangler

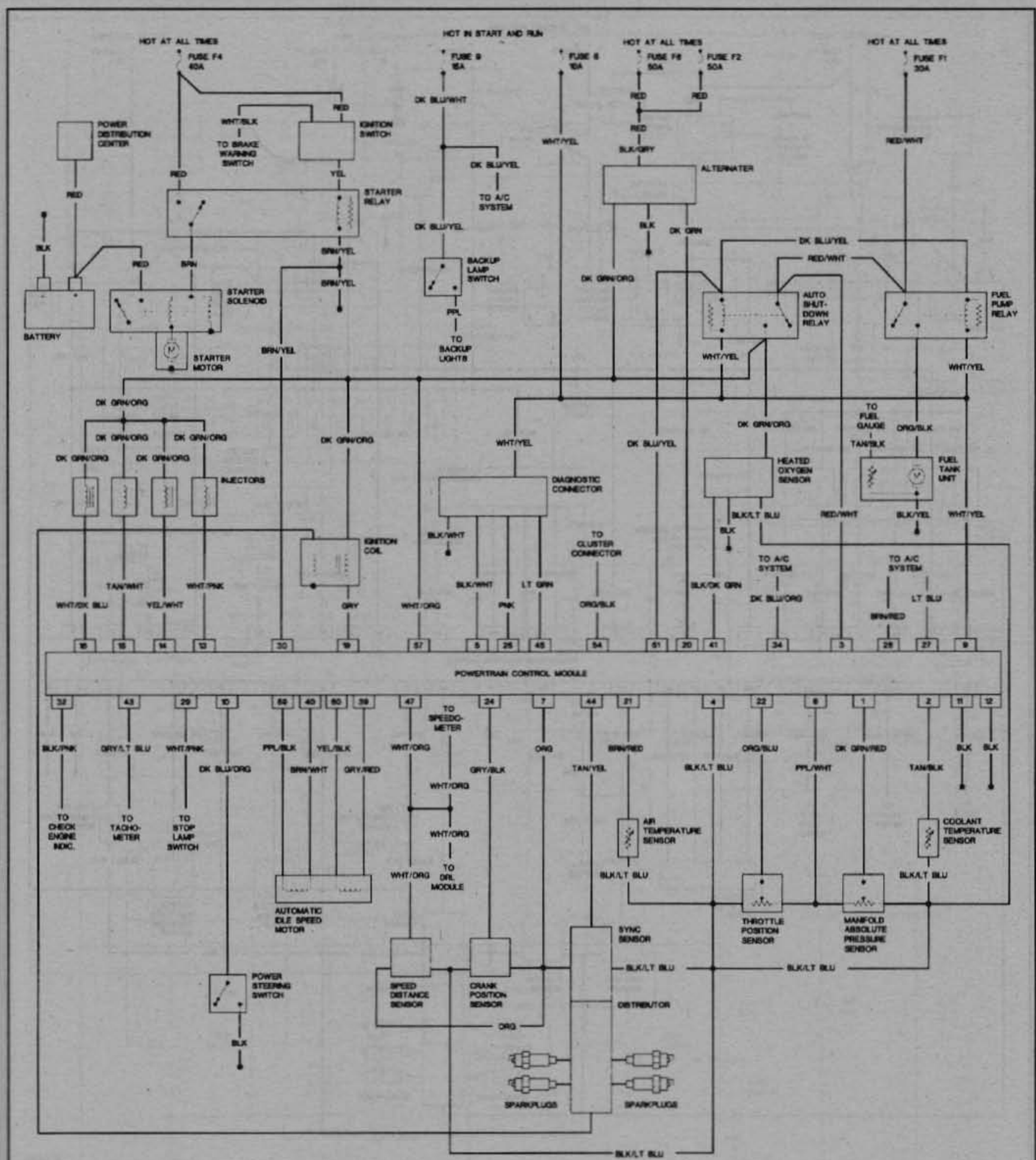

Fig. 115 Engine controls—1994—95 with 2.5L engine

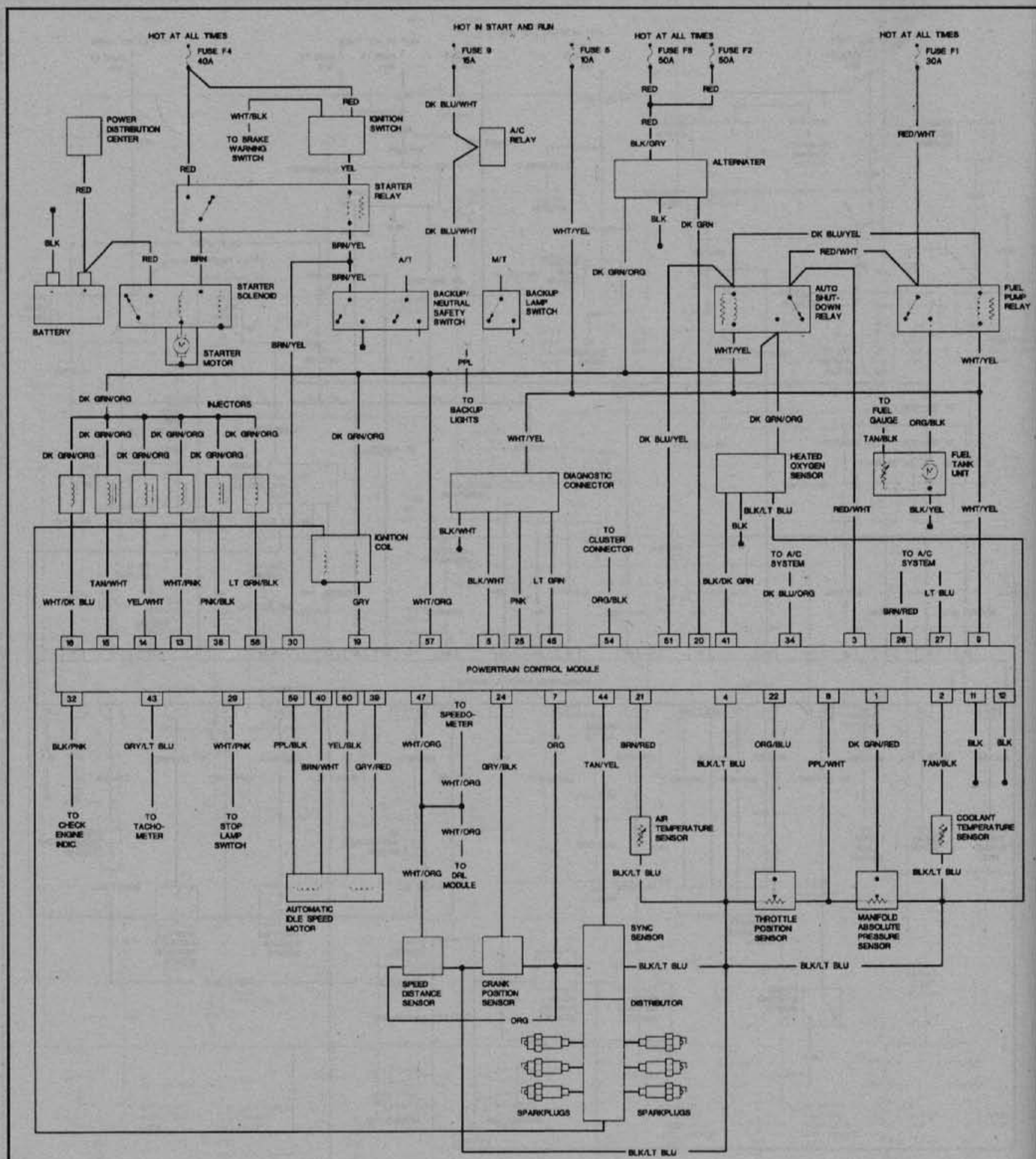

Fig. 116 Engine controls—1994—95 with 4.0L engine

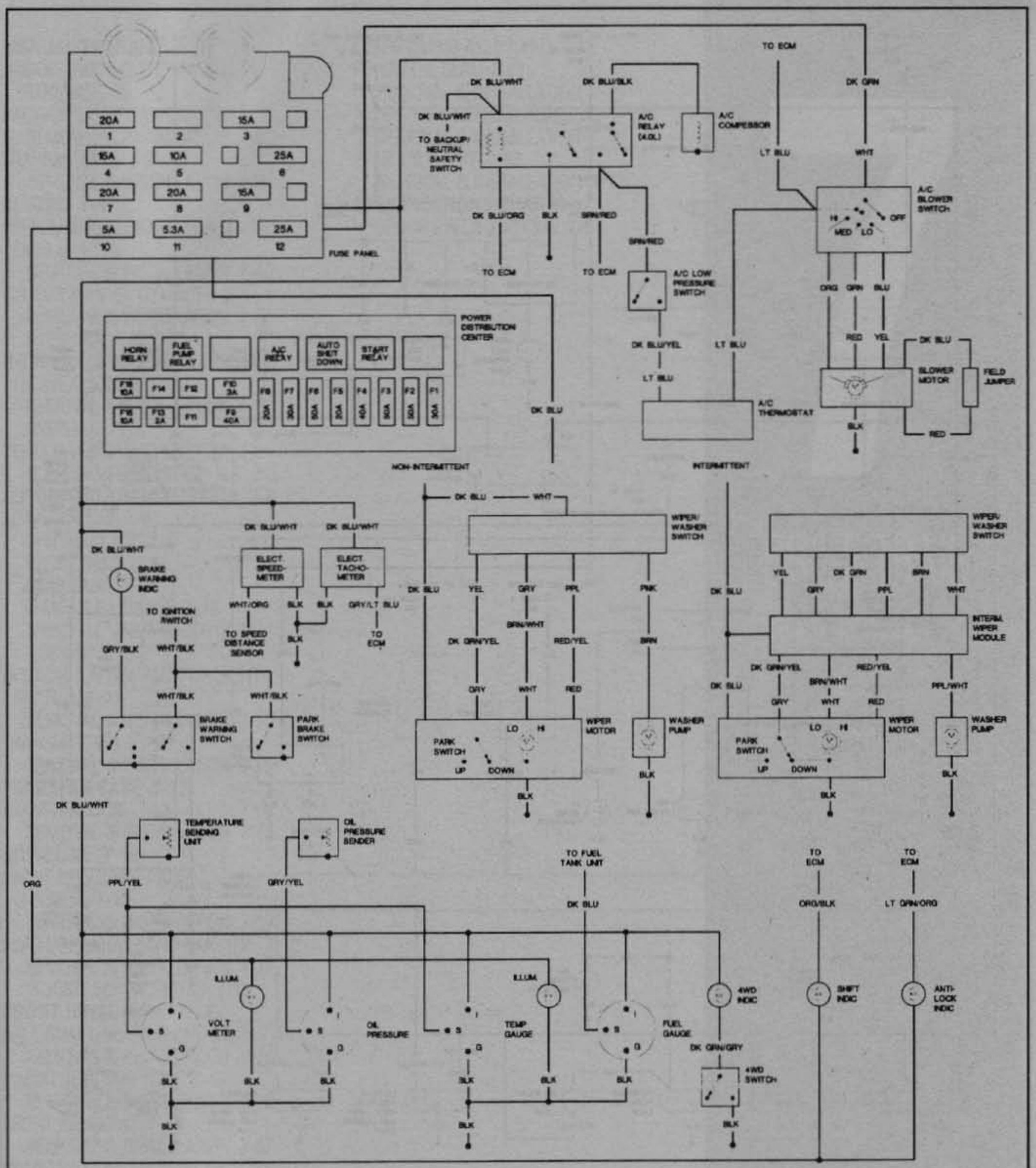

Fig. 117 Body—1994—95 Wrangler

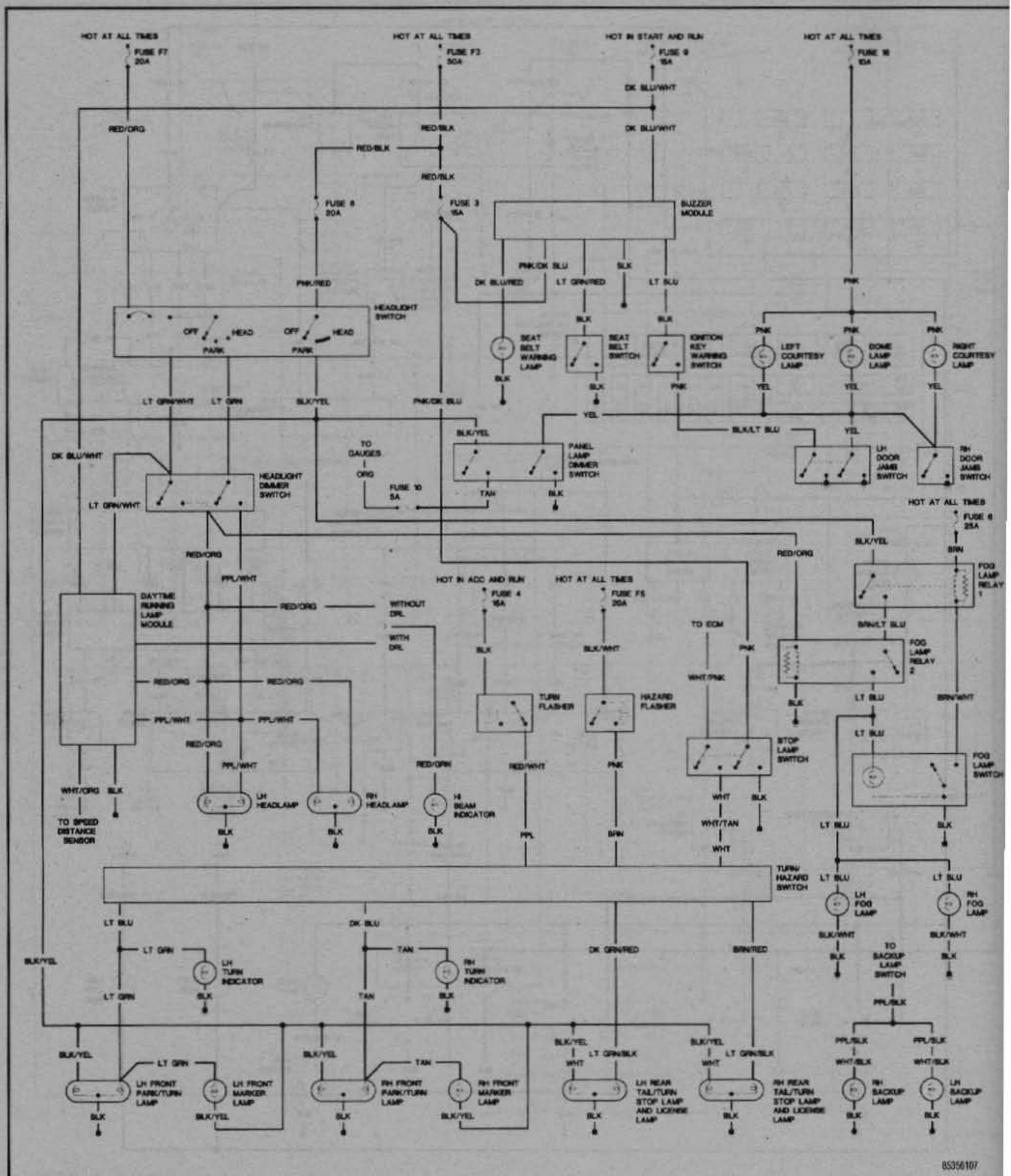

Fig. 118 Body—1994—95 Wrangler

MANUAL TRANSMISSION 7-2
UNDERSTANDING THE MANUAL TRANSMISSION 7-2
BACK-UP LIGHT SWITCH 7-2
REMOVAL & INSTALLATION 7-2
TRANSMISSION 7-2
REMOVAL & INSTALLATION 7-2
CLUTCH 7-4
PRESSURE PLATE AND DRIVEN DISC 7-4
REMOVAL & INSTALLATION 7-4
CLUTCH MASTER CYLINDER 7-6
REMOVAL & INSTALLATION 7-6
OVERHAUL 7-6
HYDRAULIC CONCENTRIC BEARING (SLAVE CYLINDER) 7-7
REMOVAL & INSTALLATION 7-7
OVERHAUL 7-8
CLUTCH HYDRAULIC SYSTEM 7-8
BLEEDING THE SYSTEM 7-8
AUTOMATIC TRANSMISSION 7-8
ADJUSTMENTS 7-8
SHIFT LINKAGE 7-8
FRONT BAND 7-9
REAR BAND 7-9
THROTTLE LINKAGE 7-10
THROTTLE VALVE CABLE (KICK-DOWN) 7-10
NEUTRAL SAFETY/BACK-UP LIGHT SWITCH 7-10
REMOVAL & INSTALLATION 7-10
TRANSMISSION 7-10
REMOVAL & INSTALLATION 7-10
TRANSFER CASE 7-12
TRANSFER CASE 7-12
REMOVAL & INSTALLATION 7-12
DRIVELINE 7-12
FRONT DRIVESHAFT AND U-JOINTS 7-12
REMOVAL & INSTALLATION 7-12
REAR DRIVESHAFT AND U-JOINTS 7-12
REMOVAL & INSTALLATION 7-12
U-JOINT REPLACEMENT 7-13
FRONT DRIVE AXLE 7-14
AXLE SHAFT, BEARING AND SEAL 7-14
REMOVAL & INSTALLATION 7-14
PINION SEAL AND YOKE 7-15
REMOVAL & INSTALLATION 7-15
FRONT AXLE UNIT 7-17
REMOVAL & INSTALLATION 7-17
COMMAND-TRAC® SHIFT MOTOR AND HOUSING 7-17
REMOVAL & INSTALLATION 7-17
FUNCTIONAL TEST 7-17
FRONT HUB AND WHEEL BEARINGS 7-18
ADJUSTMENT 7-18
REAR AXLE 7-18
GENERAL INFORMATION 7-18
DETERMINING AXLE RATIO 7-18
PINION OIL SEAL 7-19
REMOVAL & INSTALLATION 7-19
AXLE SHAFT, BEARING AND SEAL 7-19
REMOVAL & INSTALLATION 7-19
REAR AXLE UNIT 7-22
REMOVAL & INSTALLATION 7-22
SPECIFICATIONS CHARTS
TORQUE SPECIFICATIONS 7-23

7

DRIVE TRAIN

MANUAL TRANSMISSION 7-2
CLUTCH 7-4
AUTOMATIC TRANSMISSION 7-8
TRANSFER CASE 7-12
DRIVELINE 7-12
FRONT DRIVE AXLE 7-14
REAR AXLE 7-18

MANUAL TRANSMISSION

Understanding the Manual Transmission

Because of the way an internal combustion engine breathes, it can produce torque (or twisting force) only within a narrow speed range. Most overhead valve pushrod engines must turn at about 2500 rpm to produce their peak torque. Often by 4500 rpm, they are producing so little torque that continued increases in engine speed produce no power increases.

The torque peak on overhead camshaft engines is, generally, much higher, but much narrower.

The manual transmission and clutch are employed to vary the relationship between engine RPM and the speed of the wheels so that adequate power can be produced under all circumstances. The clutch allows engine torque to be applied to the transmission input shaft gradually, due to mechanical slippage. The vehicle can, consequently, be started smoothly from a full stop.

The transmission changes the ratio between the rotating speeds of the engine and the wheels by the use of gears. 4-speed or 5-speed transmissions are most common. The lower gears allow full engine power to be applied to the rear wheels during acceleration at low speeds.

The clutch driveplate is a thin disc, the center of which is splined to the transmission input shaft. Both sides of the disc are covered with a layer of material which is similar to brake lining and which is capable of allowing slippage without roughness or excessive noise.

The clutch cover is bolted to the engine flywheel and incorporates a diaphragm spring which provides the pressure to engage the clutch. The cover also houses the pressure plate. When the clutch pedal is released, the driven disc is sandwiched between the pressure plate and the smooth surface of the flywheel, thus forcing the disc to turn at the same speed as the engine crankshaft.

The transmission contains a mainshaft which passes all the way through the transmission, from the clutch to the driveshaft. This shaft is separated at one point, so that front and rear portions can turn at different speeds.

Power is transmitted by a countershaft in the lower gears and reverse. The gears of the countershaft mesh with gears on the mainshaft, allowing power to be carried from one to the other. Countershaft gears are often integral with that shaft, while several of the mainshaft gears can either rotate independently of the shaft or be locked to it. Shifting from one gear to the next causes one of the gears to be freed from rotating with the shaft and locks another to it. Gears are locked and unlocked by internal dog clutches which slide between the center of the gear and the shaft. The forward gears usually employ synchronizers; friction members which smoothly bring gear and shaft to the same speed before the toothed dog clutches are engaged.

Back-Up Light Switch

REMOVAL & INSTALLATION

The switch is threaded into the transmission and is replaced by unscrewing. No adjustments are possible. Switches are found on the right side of the case.

Transmission

REMOVAL & INSTALLATION

AX 5 Transmission

1987–89 WITH 2.5L ENGINE

CAUTION

The clutch driven disc contains asbestos, which has been determined to be a cancer causing agent. Never clean clutch surfaces with compressed air! Avoid inhaling any dust from any clutch surface! When cleaning clutch surfaces, use a commercially available brake cleaning fluid.

1. Raise the outer gearshift lever boot and remove the upper part of the console.
2. Remove the lower part of the console.
3. Remove the inner boot.
4. Remove the gearshift lever and stub shaft by pressing down on the stub shaft retainer and rotating the retainer counterclockwise to release it from the lugs in the shift tower. Then, lift the retainer, stub shaft and shift lever up and out of the tower Don't remove the shift lever from the stub shaft.
5. Raise and support the vehicle on jackstands.
6. Drain the transmission and transfer case.
7. Matchmark the rear driveshaft and yoke for installation alignment.
8. Unbolt and remove the rear driveshaft.
9. Position a floor jack under the transmission and take up the weight slightly.
10. Unbolt and remove the rear crossmember.
11. Disconnect the hydraulic line from the clutch slave cylinder. Disconnect the speedometer cable.
12. Disconnect the back-up light switch.
13. Disconnect the transfer case vent hose at the case.
14. Disconnect all linkage and hoses from the transfer case and transmission.
15. Matchmark the front driveshaft and yoke.
16. Remove the front driveshaft.
17. Chain the transmission to the jack.
18. Unbolt the transmission from the engine and lower the jack while pulling back.

To install:

19. Install the transmission to the engine. Torque the transmission-to-transfer case adapter nut to 26 ft. lbs. (35 Nm).
20. Install the front driveshaft. Torque the U-joint flange-to-transfer case nut to 35 ft. lbs. (47 Nm).
21. Connect all linkage and hoses at the transfer case and transmission.
22. Connect the transfer case vent hose at the case.
23. Connect the back-up light switch.
24. Connect the hydraulic line from the clutch slave cylinder.
25. Connect the speedometer cable.
26. Install the rear crossmember. Torque the rear crossmember-to-side sill fasteners to 30 ft. lbs. (41 Nm) and the rear support isolator-to-transmission bolts to 33 ft. lbs. (45 Nm).
27. Install the rear driveshaft. Torque the U-joint flange-to-transfer case nut to 35 ft. lbs. (47 Nm).
28. Fill the transmission and transfer case.
29. Lower the vehicle.
30. Install the gearshift lever and stub shaft by pressing down on the stub shaft retainer and rotating the retainer clockwise.
31. Install the inner boot.
32. Install the lower part of the console.
33. Raise the outer gearshift lever boot and install the upper part of the console.

BA 10/5 Transmission

1987–89 WITH 4.2L ENGINE

CAUTION

The clutch driven disc contains asbestos, which has been determined to be a cancer causing agent. Never clean clutch surfaces with compressed air! Avoid inhaling any dust from any clutch surface! When cleaning clutch surfaces, use a commercially available brake cleaning fluid.

1. Remove the shift lever knob.
2. Remove the shift lever outer boots and the transmission tower dust boots.
3. Remove the shift lever stub shaft retaining plate (snapring on some models) and remove the shift lever and stub shaft as an assembly.
4. Raise and support the vehicle on jackstands.
5. Drain the transmission and transfer case.
6. Matchmark the rear driveshaft and yoke for installation alignment.
7. Unbolt and remove the rear driveshaft.
8. Position a floor jack under the transmission and take up the weight slightly.

9. Unbolt and remove the rear crossmember.
10. Disconnect the hydraulic line from the clutch slave cylinder. Disconnect the speedometer cable.
11. Disconnect the back-up light switch.
12. Disconnect the transfer case vent hose at the case.
13. Disconnect all linkage and hoses from the transfer case and transmission.
14. Matchmark the front driveshaft and yoke.
15. Remove the front driveshaft.
16. Chain the transmission to the jack.
17. Unbolt the transmission from the engine and lower the jack while pulling back.

To install:

18. Slide the transmission and transfer case assembly into place, engaging the clutch assembly. Torque the transmission-to-transfer case adapter nut to 26 ft. lbs. (35 Nm) and the transmission case-to-engine fastener to 28 ft. lbs. (38 Nm).
19. Install the front driveshaft. Torque the U-joint strap bolts to 15 ft. lbs. (20 Nm).
20. Connect all linkage and hoses at the transfer case and transmission.
21. Connect the transfer case vent hose at the case.
22. Connect the back-up light switch.
23. Connect the hydraulic line to the clutch slave cylinder.
24. Connect the speedometer cable.
25. Install the rear crossmember. Torque the rear crossmember-to-side sill bolts to 30 ft. lbs. (41 Nm) and the rear support isolator-to-transmission bolts to 33 ft. lbs. (45 Nm).
26. Position a floor jack under the transmission and take up the weight slightly.
27. Install the rear driveshaft. Torque the U-joint strap bolts to 15 ft. lbs. (20 Nm).
28. Matchmark the rear driveshaft and yoke for installation alignment.
29. Drain the transmission and transfer case.
30. Raise and support the vehicle on jackstands.
31. Install the shift lever stub shaft retaining plate (snapring on some models) and install the shift lever and stub shaft as an assembly.
32. Install the shift lever outer boots and the transmission tower dust boot.
33. Install the shift lever knob.

AX 4/5 and AX 15 Transmissions

1990–95 MODELS

See Figures 1 and 2

1. Disconnect the negative battery cable.
2. Raise and safely support the vehicle.
3. Remove the skid plate.
4. Drain the transmission and transfer case.
5. Matchmark the front and rear driveshaft and yoke for installation alignment.
6. Unbolt and remove the driveshafts.

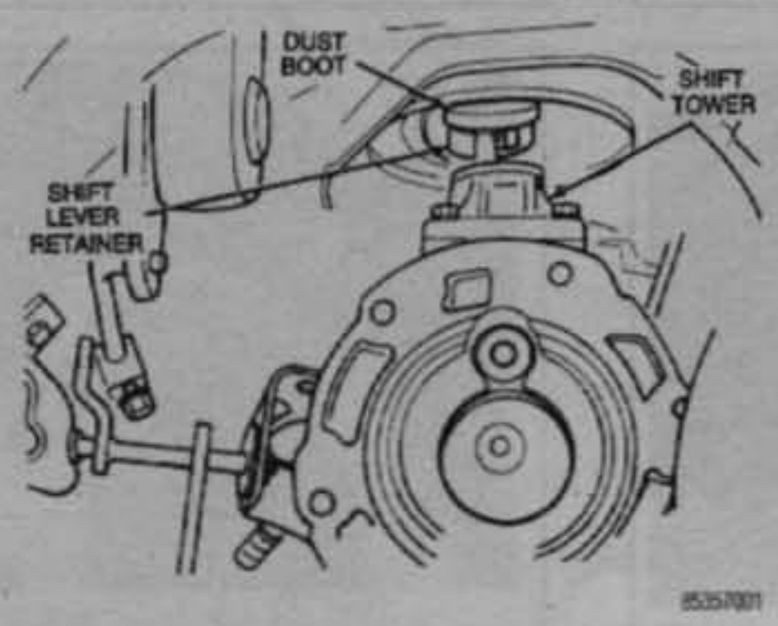

Fig. 1 Lower the transmission no more than 3 in. (76mm) to gain access to the shift lever base—AX 4/5/15 transmission

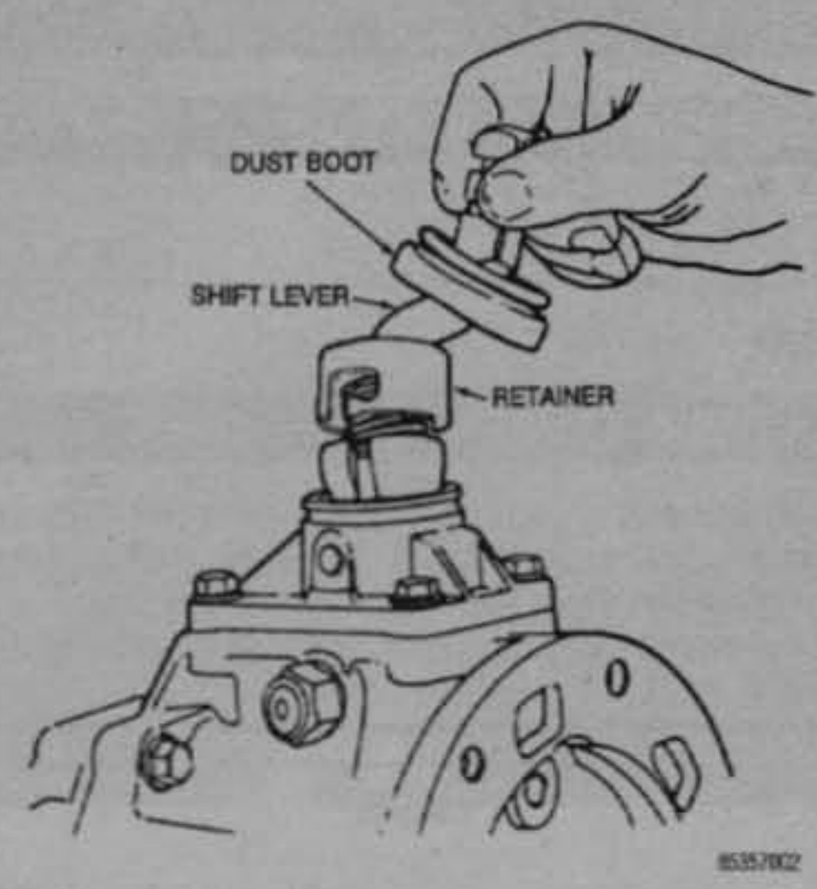

Fig. 2 Shift lever removal/installation—AX 4/5/15 transmission

7. Disconnect the transfer case shift linkage from the shift lever or range lever.
8. Disconnect the electrical connectors and vent hose from the transmission and differential.
9. Position a jack under the transmission and take up the weight slightly.
10. Unbolt and remove the rear crossmember.
11. Remove the transfer case from the transmission.
12. Lower the transmission enough to provide access to the shift lever.
13. Reach up and around the transmission case and unseat the shift lever dust boot from the transmission shift tower. Reposition the boot to access the lever retainer.
14. Press the shift lever retainer downward and turn it clockwise to release it.
15. Lift the lever and retainer out of the shift tower.

➡It is not necessary to remove the shift lever from the floor pan boot. Leave the lever in place for installation.

16. If equipped, remove the engine timing sensor.
17. If equipped, disconnect the speedometer cable from the transmission.
18. Disconnect the slave cylinder from the transmission and position it aside.
19. Secure the transmission to the jack.
20. Unbolt the transmission from the engine and lower the jack while pulling back.

To install:

21. Lubricate the pilot bearing and transmission input splines with high temperature grease.
22. Align the transmission input shaft and clutch disc splines and install the transmission. Torque the bolts to 45 ft. lbs. (61 Nm).
23. Reach up around the transmission and insert the shift lever in the shift tower. Press the lever retainer downward and turn it clockwise to lock it in place. Install the dust lever on the dust boot.
24. Install the transfer case and torque the bolts to 26 ft. lbs. (35 Nm).
25. Install the crossmember. Torque the bolts to 26–33 ft. lbs. (37–45 Nm).
26. Install the slave cylinder to the transmission housing.
27. If equipped, install the engine timing sensor.
28. If equipped, connect the speedometer cable.
29. Connect the electrical connectors and vent hose to the transmission and transfer case.
30. Connect the transfer case shift rod to the lever.
31. Install the driveshafts using new strap bolts. Torque the strap bolt nuts to 14 ft. lbs. (19 Nm) and the flange-to-transfer case bolts to 35 ft. lbs. (47 Nm).
32. Fill the transmission and transfer case.
33. Lower the vehicle.
34. Connect the negative battery cable.

CLUTCH

Pressure Plate and Driven Disc

REMOVAL & INSTALLATION

See Figures 3 thru 17

CAUTION

The clutch driven disc contains asbestos, which has been determined to be a cancer causing agent. Never clean clutch surfaces with compressed air! Avoid inhaling any dust from any clutch surface! When cleaning clutch surfaces, use a commercially available brake cleaning fluid.

1. Raise and safely support the vehicle.
2. Remove the transmission or transmission/transfer case assembly.
3. Matchmark the pressure plate and flywheel. Loosen the pressure plate bolts, a little at a time, in rotation, to avoid warpage.
4. Remove the pressure plate and clutch disc.
5. Inspect the flywheel for scoring, cracks, warpage or other wear; resurface or replace as necessary.
6. Inspect the pilot bearing for excessive wear or damage and replace as necessary.

To install:

7. If removed, install the pilot bearing after lubricating with grease. Seat the bearing in the crankshaft with a clutch alignment tool.
8. Check the clutch disc run-out by installing the disc on the transmission

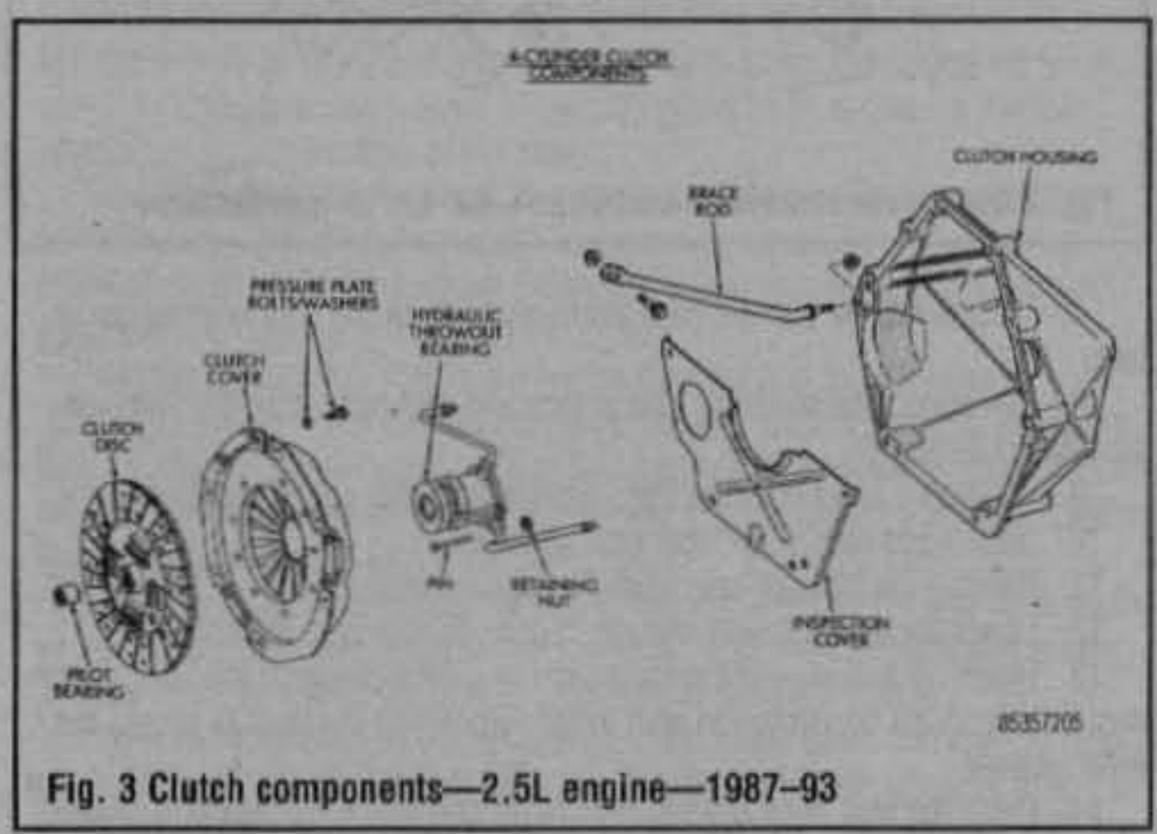

Fig. 3 Clutch components—2.5L engine—1987–93

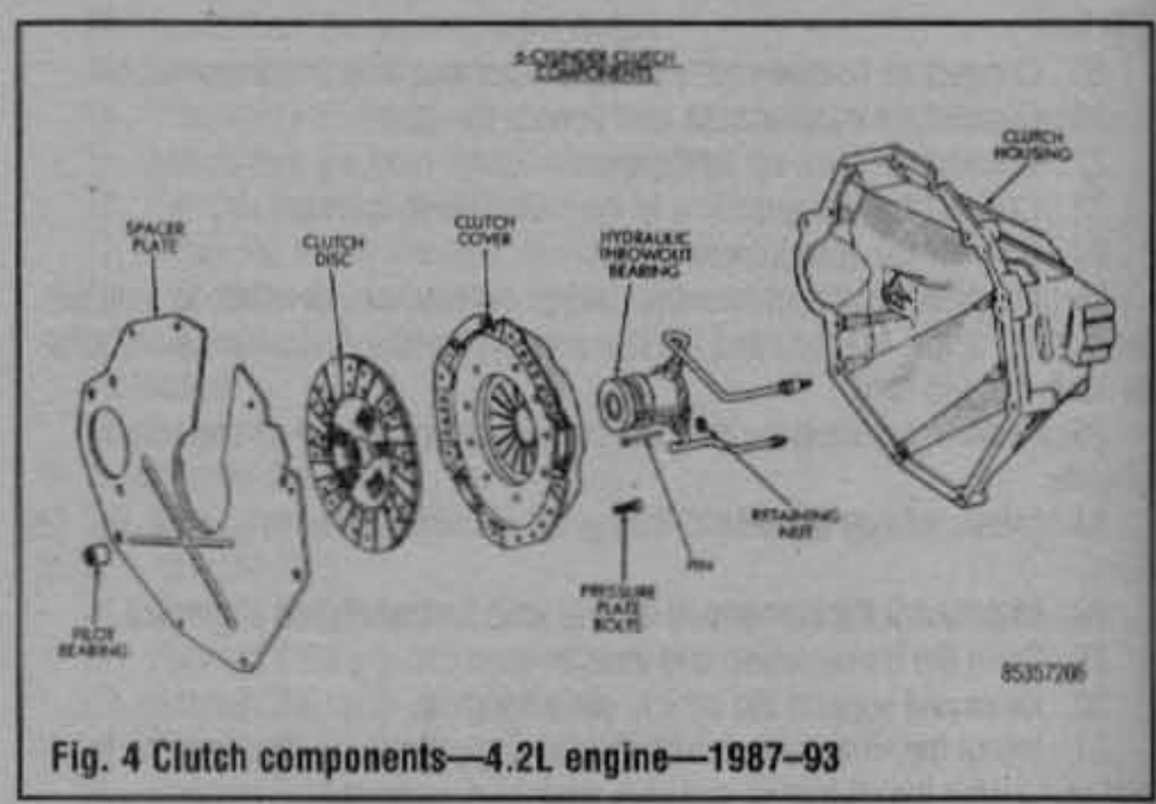

Fig. 4 Clutch components—4.2L engine—1987–93

Fig. 5 Typical clutch alignment tool, note how the splines match the transmission's input shaft

Fig. 6 Loosen and remove the clutch and pressure plate bolts evenly, a little at a time . . .

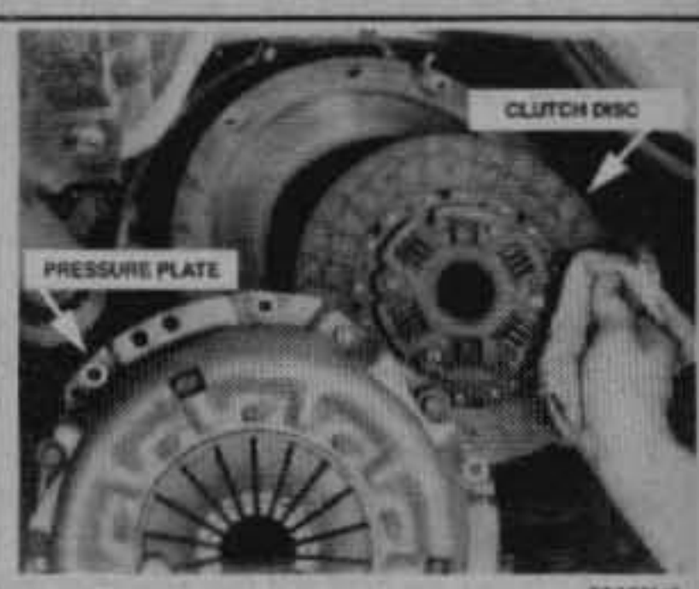

Fig. 7 . . . then carefully remove the clutch and pressure plate assembly from the flywheel

Fig. 8 Check across the flywheel surface, it should be flat

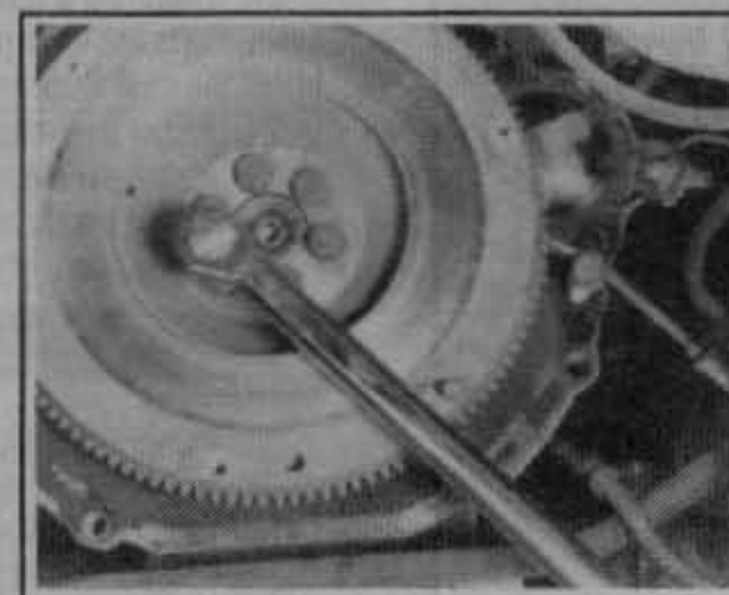

Fig. 9 If necessary, lock the flywheel in place and remove the retaining bolts . . .

Fig. 10 . . . then remove the flywheel from the crankshaft in order replace it or have it machined

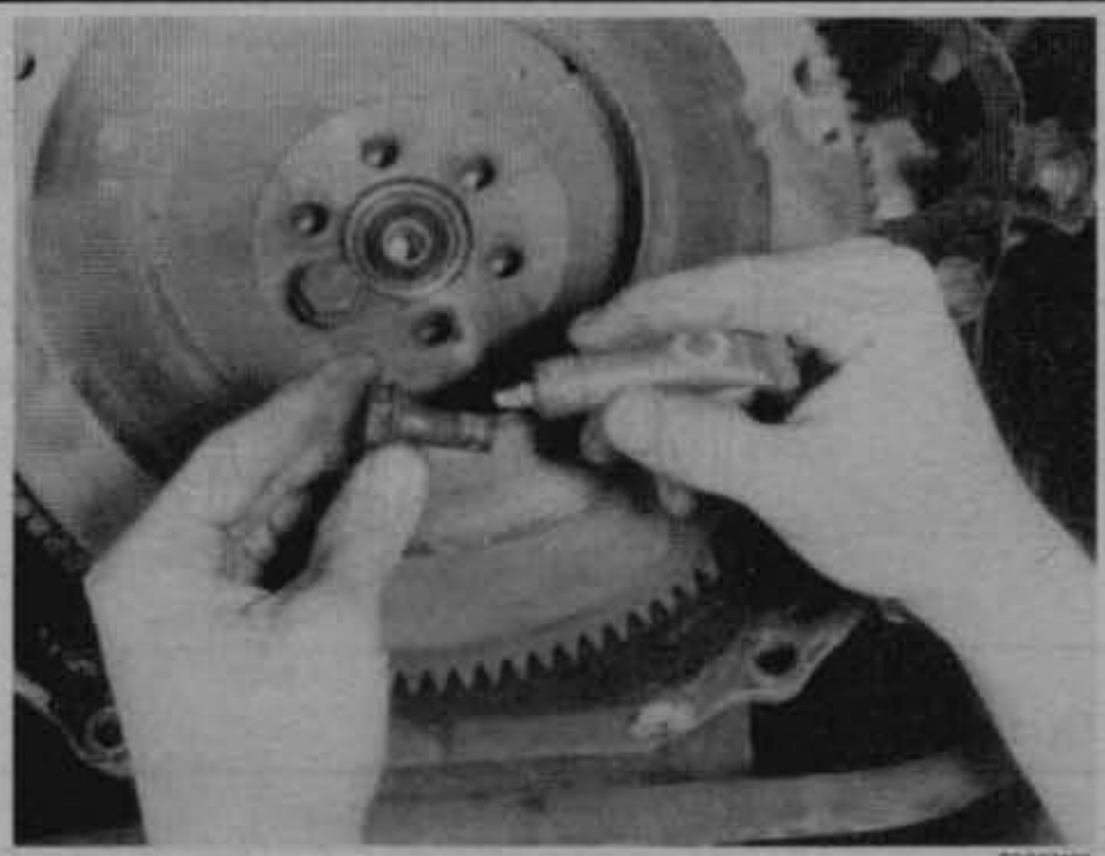

Fig. 11 Upon installation, it is usually a good idea to apply a thread-locking compound to the flywheel bolts

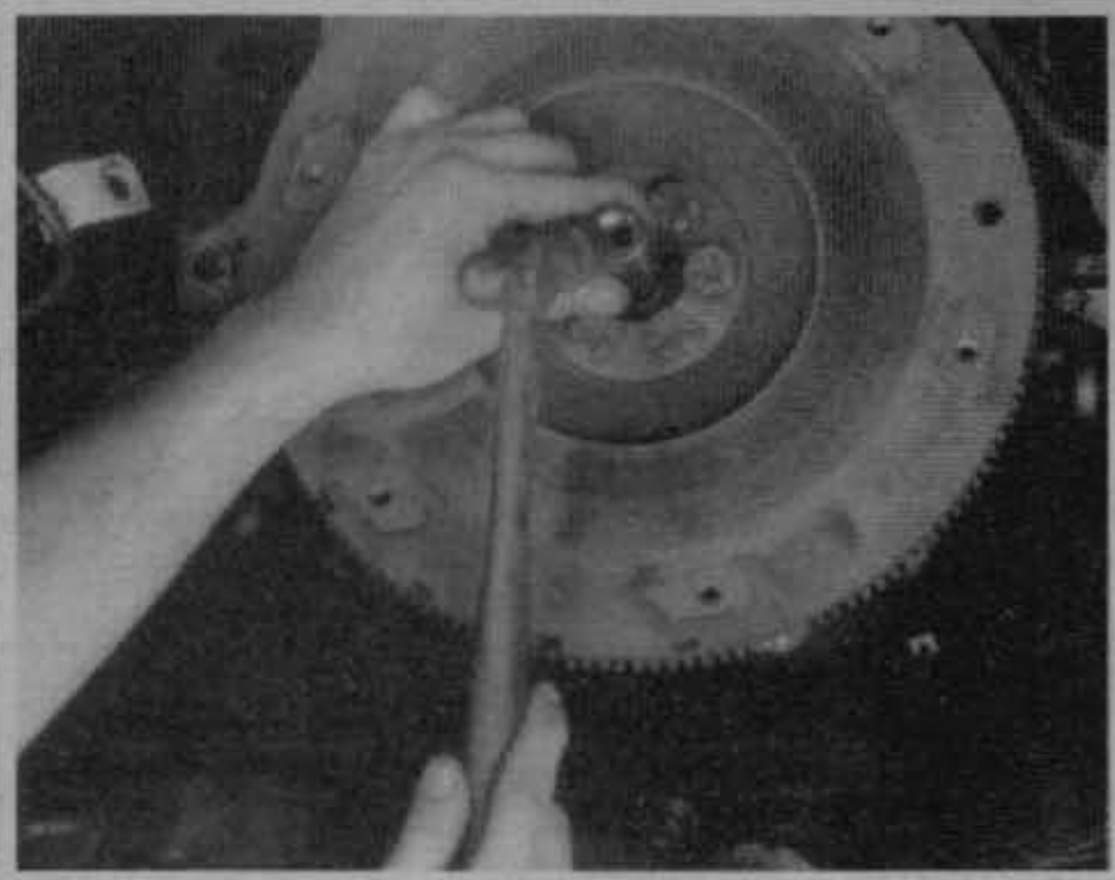

Fig. 13 Tap gently to install the pilot bearing

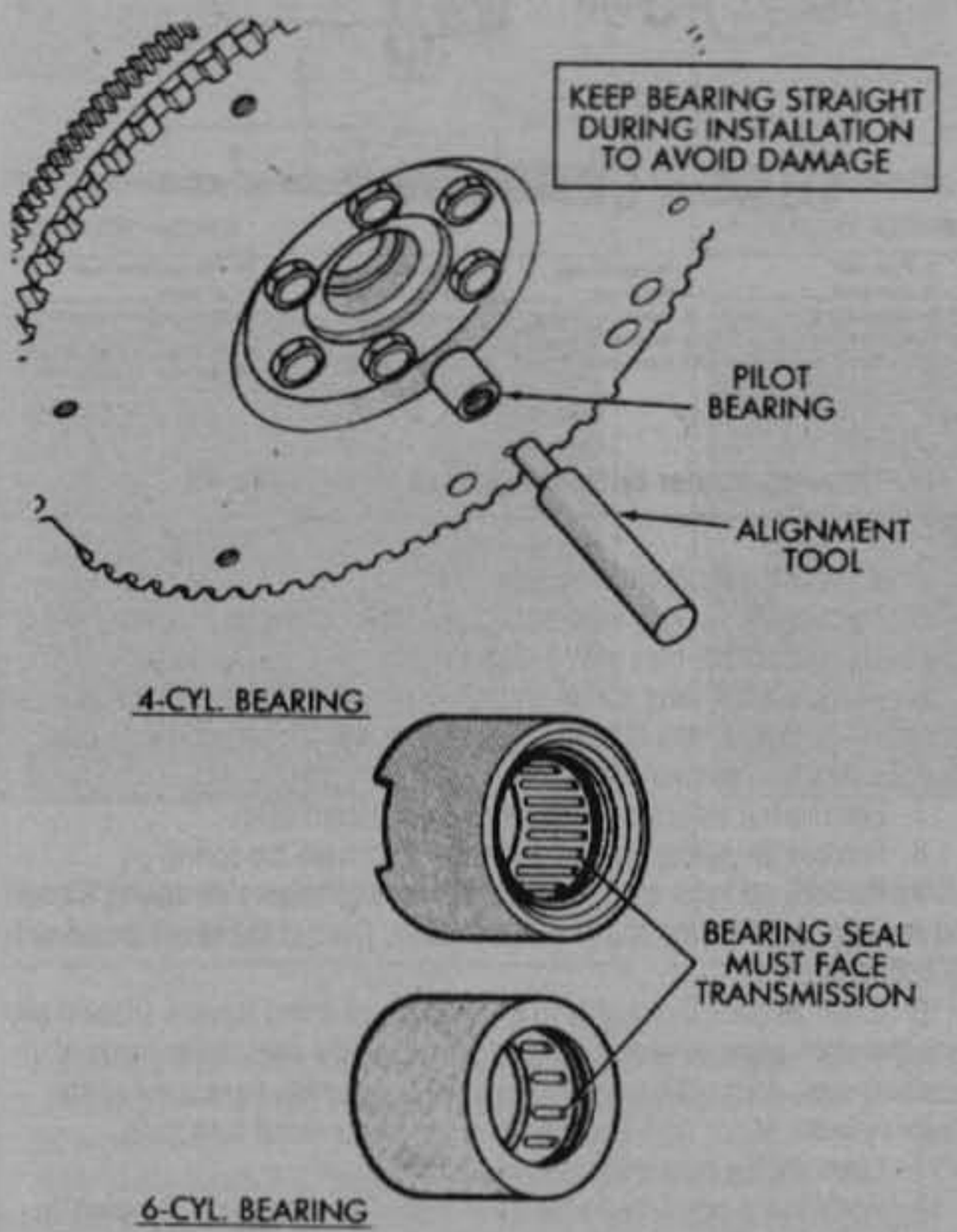

Fig. 12 Pilot bearing installation

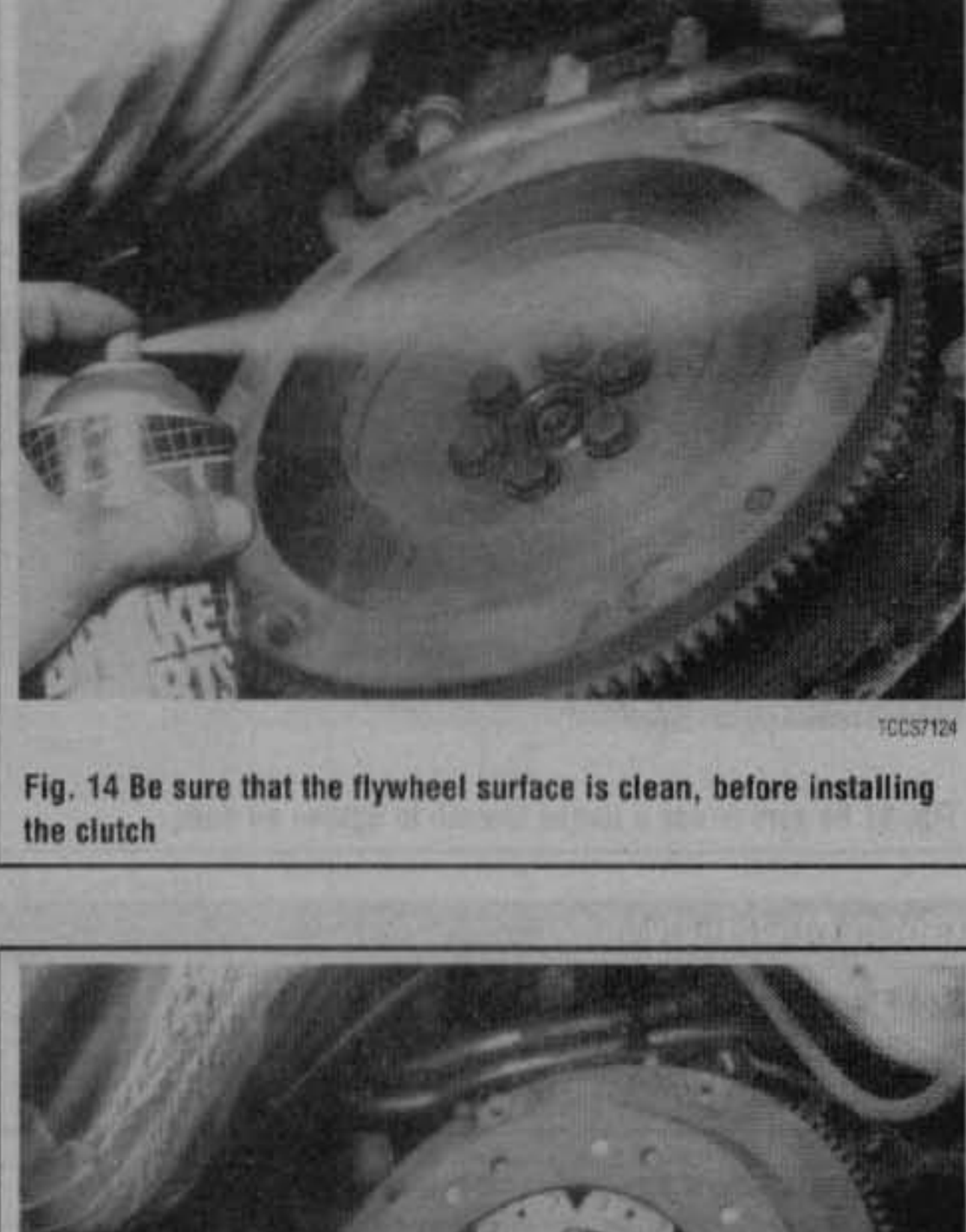

Fig. 14 Be sure that the flywheel surface is clean, before installing the clutch

Fig. 15 Install a clutch alignment arbor, to align the clutch assembly during installation

input shaft. Run-out should not exceed 0.020 in. (0.5mm) when measured ¼ inch from the outer edge of the facing.

9. Install the clutch alignment tool in the pilot bearing.
10. Install the clutch disc on the tool.
11. Install the pressure plate and tighten the bolts finger-tight. The pressure plate bolts must be tightened a little at a time, in rotation, to avoid warpage. Torque the pressure plate bolts as follows:
   - 2.5L engine—23 ft. lbs. (31 Nm)
   - 4.0L and 4.2L engines—40 ft. lbs. (54 Nm)
12. Install the transmission or transmission/transfer case assembly and lower the vehicle.

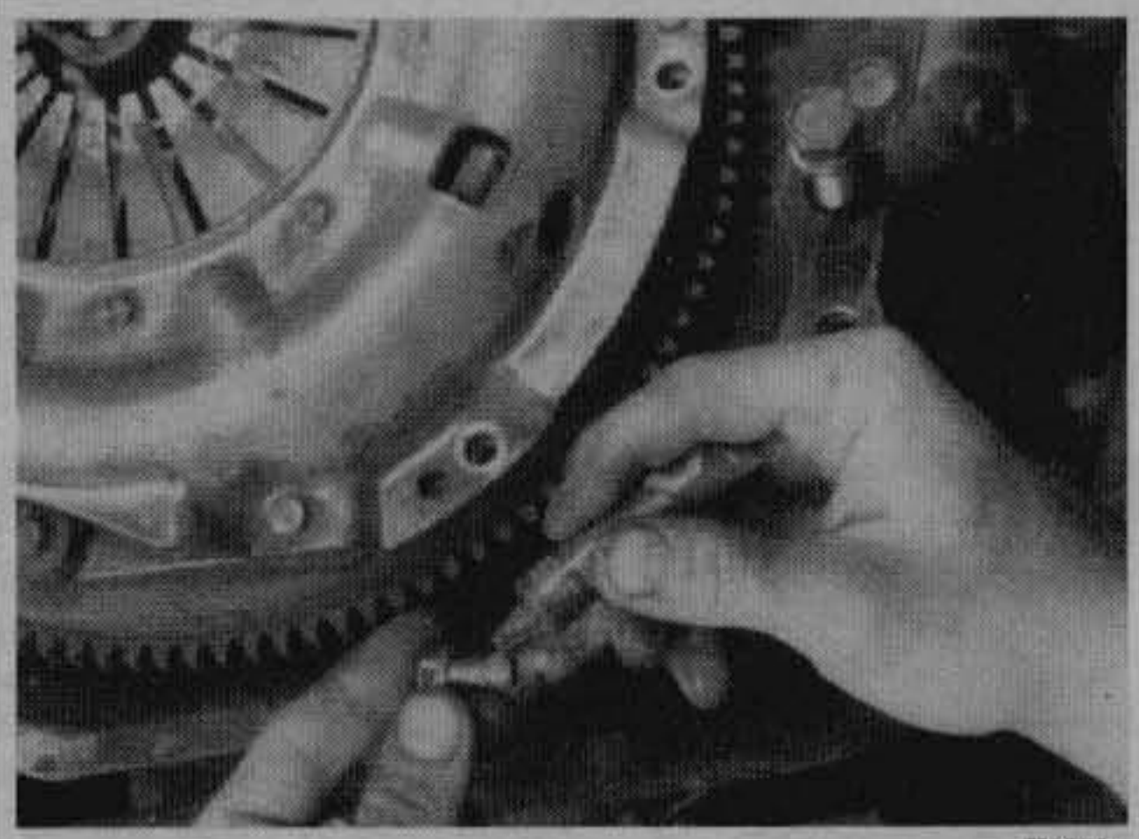

Fig. 16 You may want to use a threadlocking compound on the clutch assembly bolts

Fig. 17 Be sure to use a torque wrench to tighten all bolts

Clutch Master Cylinder

See Figure 18

REMOVAL & INSTALLATION

1. Raise and support the vehicle on jackstands.
2. Disconnect the hydraulic line at the cylinder. Cap the line.
3. Unbolt and remove the slave cylinder from the clutch housing.
4. Installation is the reverse of removal. Torque the mounting bolts to 19 ft. lbs. (26 Nm). Refill and bleed the system.

OVERHAUL

1987–90 Models

See Figure 19

➡On 1991–95 models, the clutch master cylinder is a sealed unit which must be serviced by replacement only.

1. Remove the cover and reservoir cap.
2. Remove and discard the dust boot from the pushrod.
3. Remove and discard the pushrod retaining snapring.

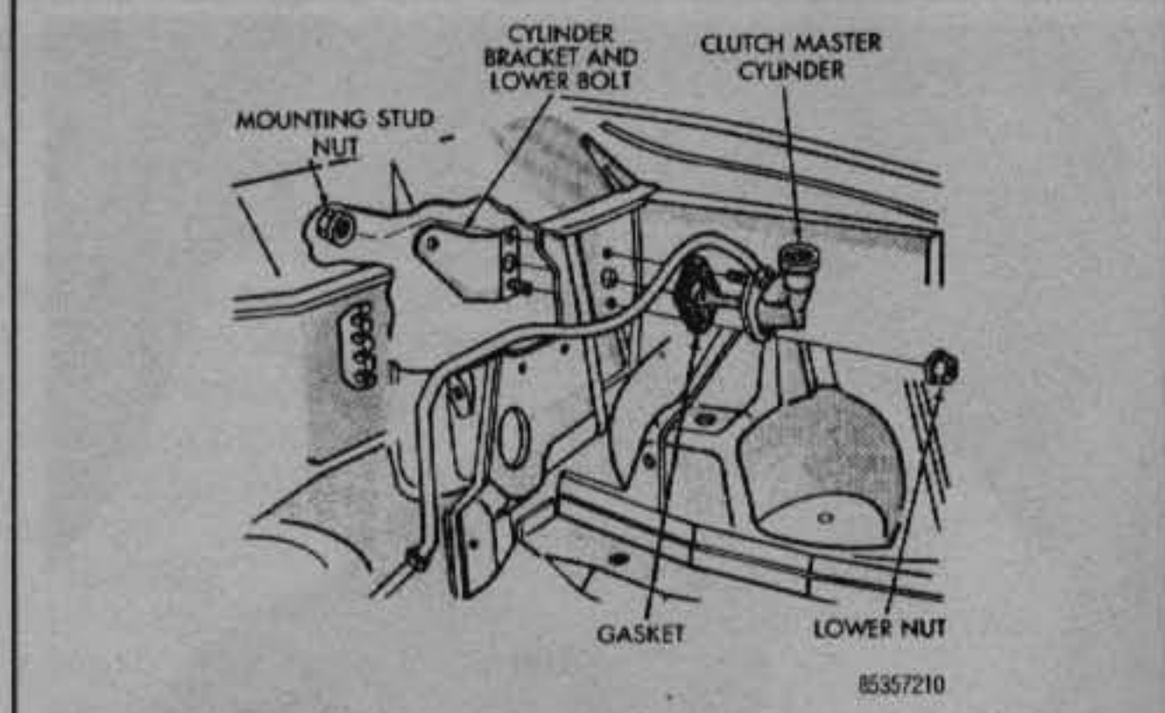

Fig. 18 Clutch master cylinder installation

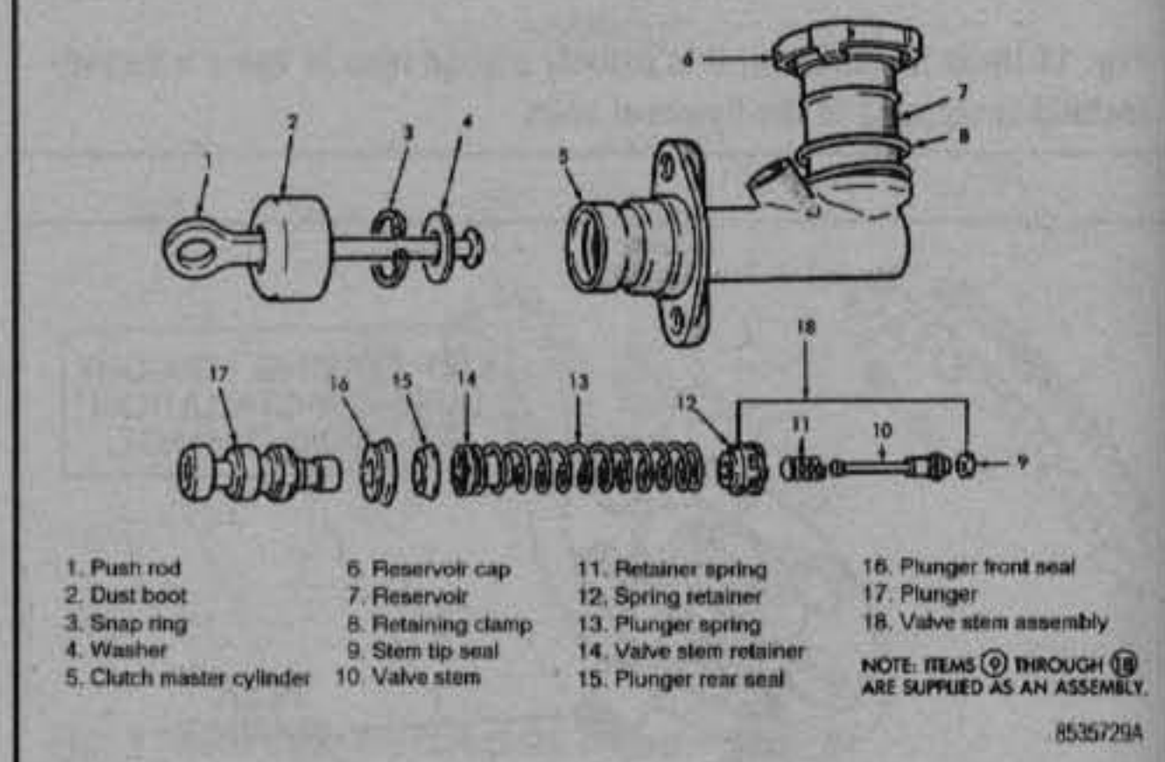

Fig. 19 Clutch master cylinder exploded view—1987–90

4. Remove the pushrod and washer.
5. Remove the plunger, valve spring and stem. It may be necessary to tap the assembly out of the bore with a rubber mallet.
6. Compress the valve spring enough to pry off the retainer and remove the spring and stem assembly from the plunger. The retainer tab should be pried upward with a thin screwdriver.
7. Remove the seals from the plunger and discard them.
8. Remove the spring retainer and valve stem from the spring.
9. Remove the valve stem from the retainer and remove the spring washer and stem tip seal from the end of the valve stem. Discard the stem tip seal and the spring washer.
10. Clean all parts thoroughly in a safe brake cleaning solvent. Discard any parts that show signs of wear, pitting or damage. If the core shows signs of excessive wear, deep pitting, severe corrosion or scoring, replace the entire master cylinder. Minor bore imperfections can be corrected by honing.
11. Lubricate the bore with clean brake fluid.
12. Position the new seal on the valve stem. The shoulder of the stem tip seal should fit into the undercut at the end of the valve stem.
13. Install the new seals on the plunger. The seal lips face the valve stem end of the plunger.
14. Install the new spring and retainer on the stem.
15. Install the plunger retainer in the spring.
16. Insert the plunger into the retainer.
17. Compress the spring against the plunger. When the end of the stem passes through the valve stem retainer and seats in the small bore in the end of the plunger, bend the retainer tab on the valve stem retainer downward to lock the stem and retainer on the plunger.
18. Lubricate the spring and plunger assembly with clean brake fluid and insert the assembly, spring end first, into the bore.
19. Install the new dust boot on the pushrod.
20. Lubricate the ball end of the pushrod and the lip of the dust boot with clean brake fluid, or the lubricant supplied in the overhaul kit.

21. Insert the pushrod and retaining washer into the bore.
22. Install the new snapring. Properly position the dust boot.

Hydraulic Concentric Bearing (Slave Cylinder)

REMOVAL & INSTALLATION

1987–93 Models

See Figures 3, 4, 20 thru 26

The hydraulic concentric bearing incorporates the release bearing and the slave cylinder in a single assembly.

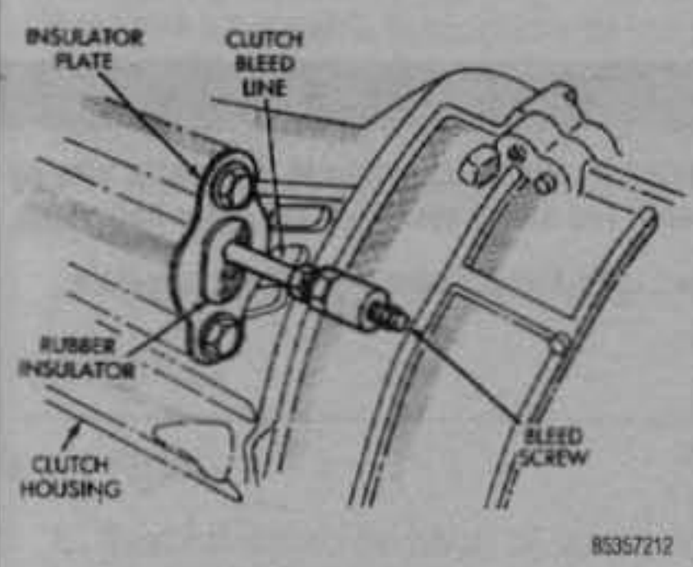

Fig. 20 Insulator, plate and bleed screw—4-cylinder engine

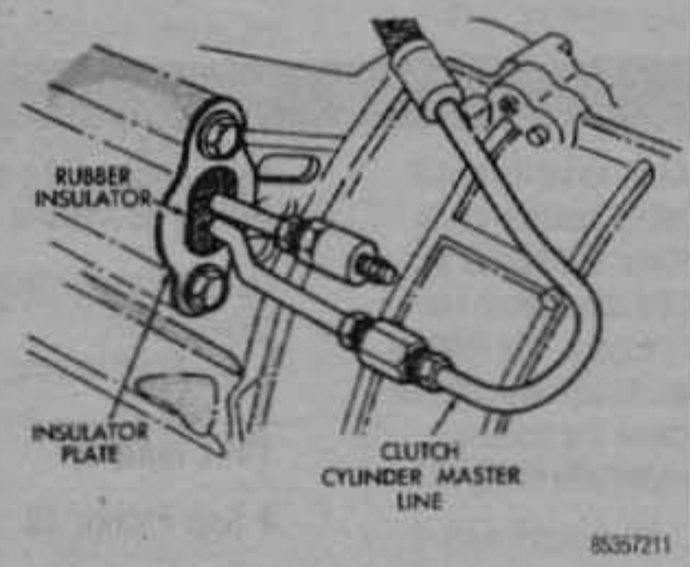

Fig. 21 Insulator, plate and bleed screw—6-cylinder engines

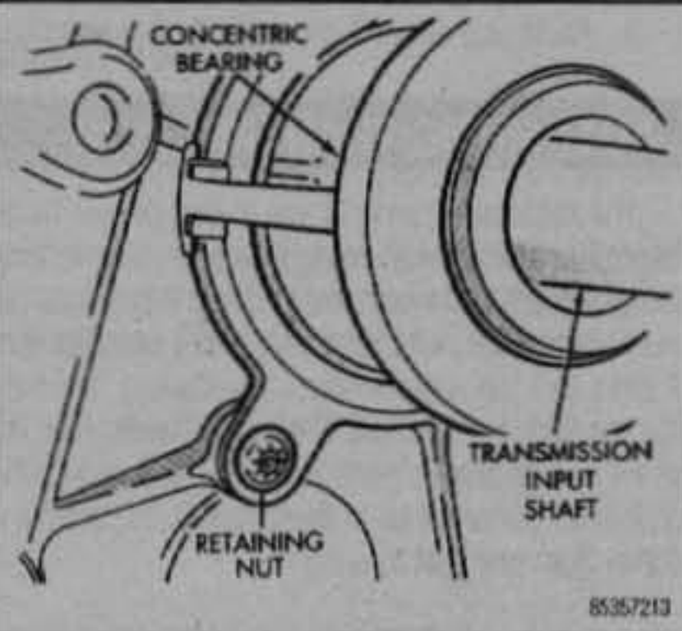

Fig. 22 Concentric bearing retaining nut

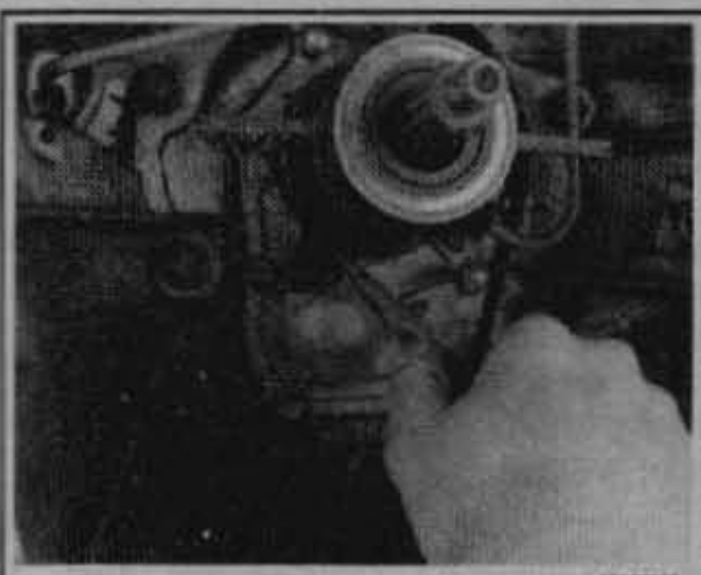

Fig. 23 Concentric bearing retaining nut removal/installation

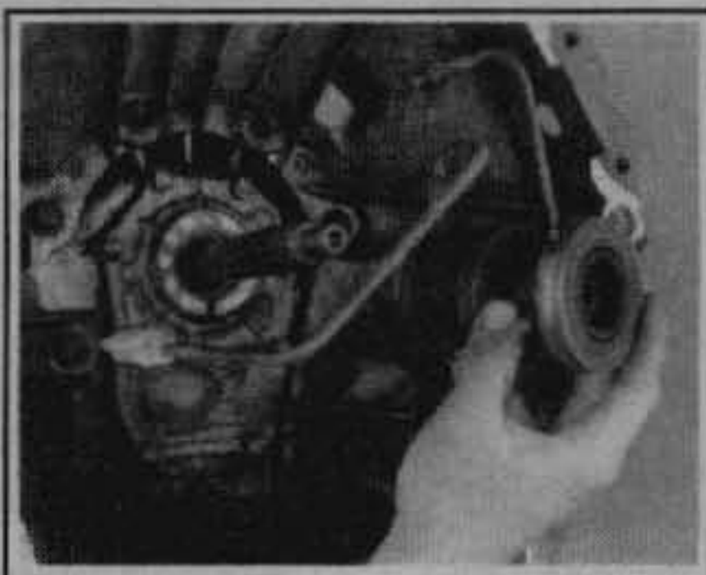

Fig. 24 Concentric bearing removal/installation

Fig. 25 Concentric bearing components

The hydraulic concentric bearing completely encircles the transmission input shaft. In operation, the piston movement causes the bearing to move in a straight line direction.

The hydraulic concentric bearing is serviced as an assembly only. The release bearing portion of the assembly is permanently attached to the piston. The hydraulic lines are also permanently attached.

1. Disconnect the negative battery cable.
2. Raise and support the vehicle safely.
3. Remove the transmission.
4. Disconnect the clutch master cylinder fluid line.
5. Remove the insulator plate bolts and slide the plate off the bleed line.
6. Remove the concentric bearing retaining nut.
7. Remove the concentric bearing from the transmission input shaft. If the bearing will be reused, secure the bearing and piston with rubber bands.

To install:

8. Inspect the bearing mounting pin and replace the front cover if the pin is damaged. Install the concentric bearing on the transmission input shaft.
9. Guide the bearing fluid and bleed lines through the openings in the clutch housing.
10. Position the bearing boss on the mounting pin and seat the bearing against the transmission. Install a new retaining nut and unhook the T-handle straps retaining the bearing.
11. Install the insulator and plate.
12. Install the transmission and transfer case and connect the clutch master cylinder fluid line.
13. Fill and bleed the clutch hydraulic system.

1994–95 Models

The clutch master cylinder, slave cylinder and connecting line are sealed units which must be replaced as an assembly; it is not rebuildable. Refer to the Master Cylinder removal and installation procedure, outlined earlier in this section.

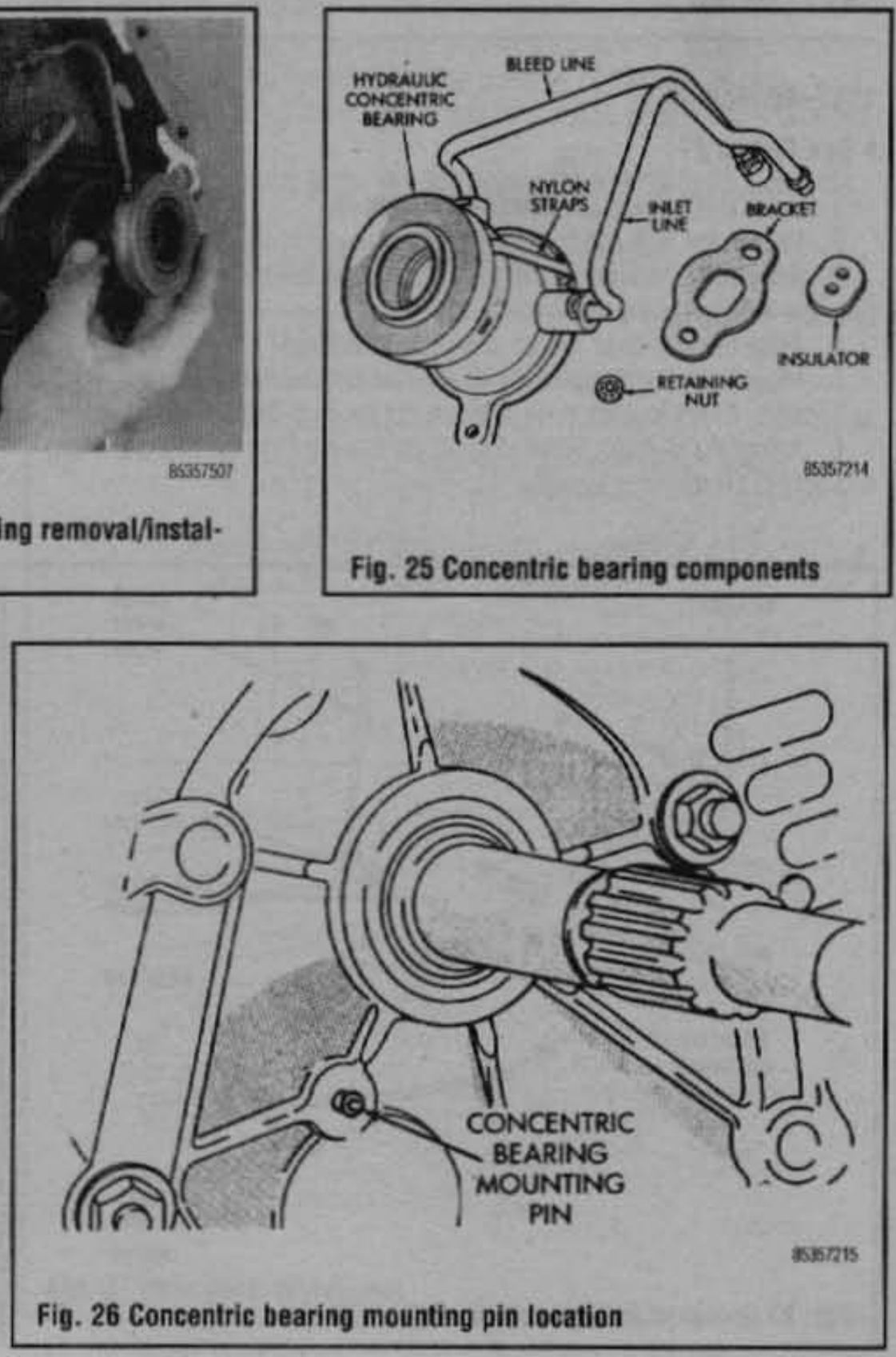

Fig. 26 Concentric bearing mounting pin location

OVERHAUL

The hydraulic concentric bearing (slave cylinder) is not rebuildable and must be replaced as an assembly if defective.

Clutch Hydraulic System

BLEEDING THE SYSTEM

1987–93 Models

See Figures 20 and 21

1. Fill the reservoir with clean brake fluid.
2. Raise and support the vehicle on jackstands.
3. Attach one end of a rubber hose to the concentric bearing bleeder screw and place the other end in a jar, filled halfway with clean brake fluid. Make sure that the hose will stay submerged.
4. Loosen the bleeder screw.
5. Have an assistant press and hold the clutch pedal to the floor. Tighten the bleeder screw with the pedal at the floor. Bubbles will have appeared in the jar when the pedal was depressed.
6. Have your assistant release the pedal, then perform the sequence again, until bubbles no longer appear in the jar.
7. Lower the vehicle and test the clutch.

1994–95 Models

The clutch master cylinder, slave cylinder and connecting line are sealed units and are prefilled with fluid at the factory.

AUTOMATIC TRANSMISSION

The automatic transmission allows engine torque and power to be transmitted to the rear wheels within a narrow range of engine operating speeds. It will allow the engine to turn fast enough to produce plenty of power and torque at very low speeds, while keeping it at a sensible rpm at high vehicle speeds (and it does this job without driver assistance). The transmission uses a light fluid as the medium for the transmission of power. This fluid also works in the operation of various hydraulic control circuits and as a lubricant. Because the transmission fluid performs all of these functions, trouble within the unit can easily travel from one part to another.

Adjustments

SHIFT LINKAGE

1987–90 Models

See Figure 27

1. Raise and support the vehicle on jackstands.
2. Loosen the shift rod trunnion jamnuts.
3. Remove the lockpin retaining the trunnion to the bell crank and disengage the trunnion at the bell crank.
4. Place the shift lever in Park and lock the column.
5. Move the transmission case lever as far into the Park (rearward) position as possible. Check that the driveshaft will not rotate in this position.
6. Adjust the shift rod trunnion to obtain free pin fit in the bell crank arm and tighten the trunnion jamnuts.

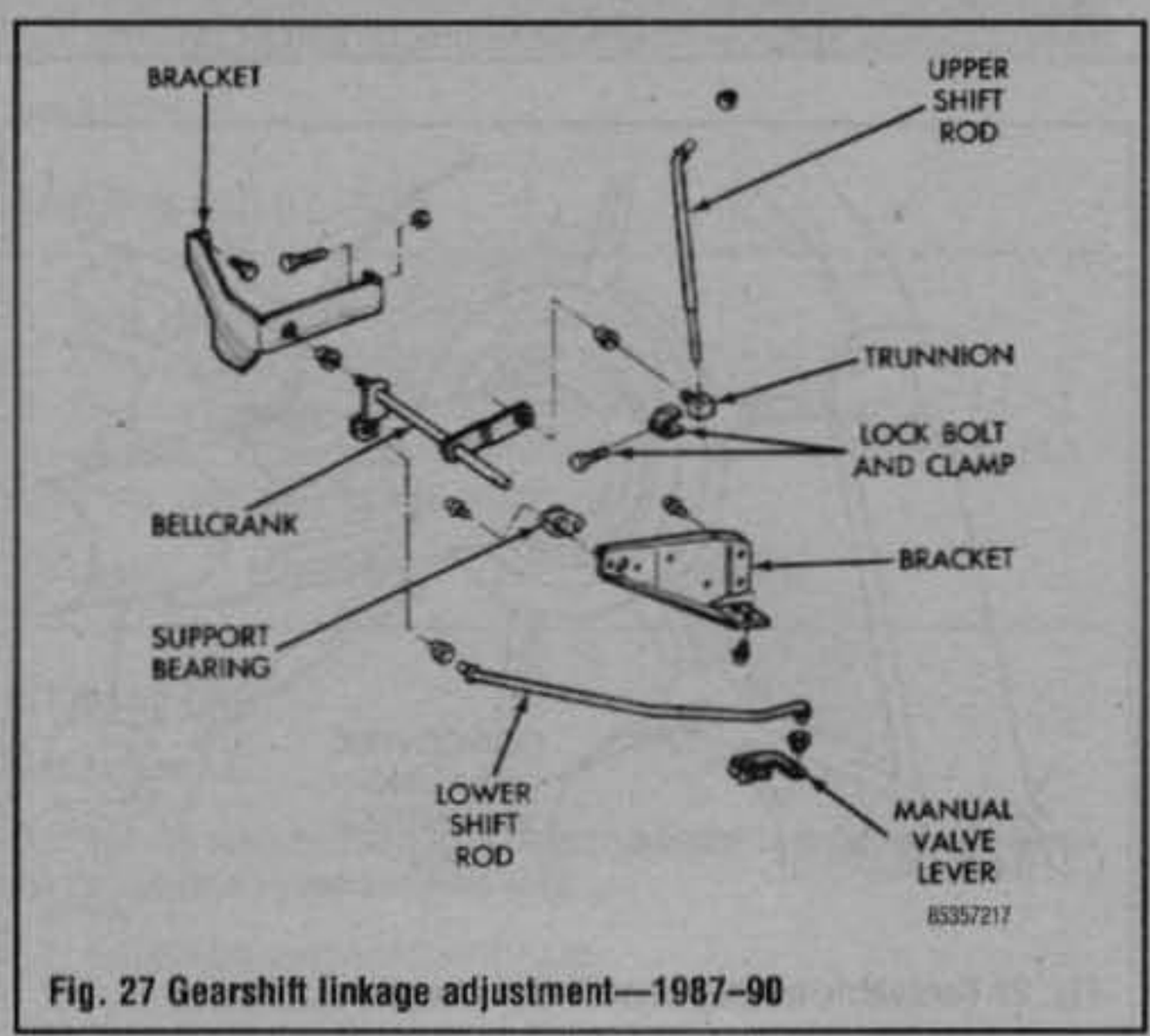

Fig. 27 Gearshift linkage adjustment—1987–90

All play must be eliminated for proper adjustment. Eliminate play by pulling downward on the shift rod and pressing on the outer bell crank.

7. Move the gearshift lever to Park and Neutral and check to see if the engine starts.
8. Road test the vehicle.

1991 Models

See Figure 28

1. Shift the transmission into **P** and lock the steering column.
2. Raise and support the vehicle safely.
3. Check the condition of the shift rods, bell crank, bell crank brackets, and linkage bushings. Repair as necessary.
4. Loosen the shift rod trunnion jamnuts.
5. Remove the lockpin that retains the shift rod trunnion to the bell crank. Disengage the trunnion and shift rod at the bell crank.
6. Move the transmission lever rearward into the **P** detent. Be sure the lever is as far rearward as it will go.
7. Check the engagement of the park detent by trying to rotate the driveshaft with the rear wheels off of the ground. The shaft will not rotate if the park detent is engaged.
8. Adjust the trunnion until it will fit in the bell crank arm freely. Prevent the shift rod from turning while tightening the the bolt or nut. Tighten the jamnuts.
9. Install the lock pin.

Gearshift linkage lash must be eliminated to obtain proper adjustment. Eliminate lash by pulling down on the shift rod and pressing up on the bell crank.

10. Check engine starting in **P** and **N**; be sure it will not start in any other gear.

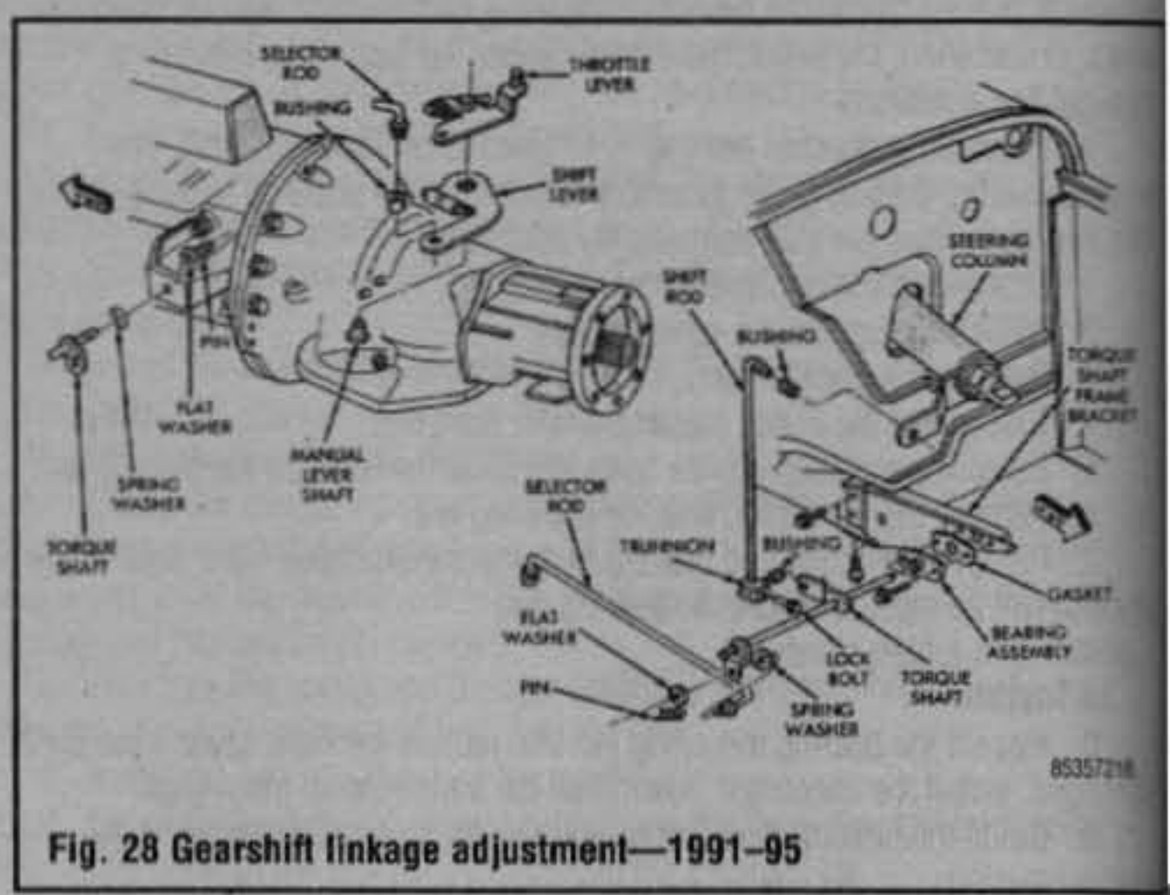

Fig. 28 Gearshift linkage adjustment—1991–95

1992–95 Models

See Figure 28

1. Shift the transmission into **P** and lock the steering column.
2. Raise and support the vehicle safely.
3. Check the condition of the shift rods, bell crank, bell crank brackets, and linkage bushings. Repair as necessary.
4. Loosen the shift rod trunnion lockbolt or nut.
5. Remove the lockpin that retains the shift rod trunnion to the bell crank. Disengage the trunnion and shift rod at the bell crank.
6. Move the transmission lever rearward into the **P** detent. Be sure the lever is as far rearward as it will go.
7. Check the engagement of the park detent by trying to rotate the driveshaft with the rear wheels off of the ground. The shaft will not rotate if the park detent is engaged.
8. Adjust the trunnion until it will fit in the bell crank arm freely. Prevent the shift rod from turning while tightening the the bolt or nut. Tighten the bolt or nut.
9. Install the lock pin.

➡Gearshift linkage lash must be eliminated to obtain proper adjustment. Eliminate lash by pulling down on the shift rod and pressing up on the bell crank.

10. Check engine starting in **P** and **N**; be sure it will not start in any other gear.

FRONT BAND

See Figure 29

1. Raise and support the vehicle on jackstands. The front band adjusting screw is located on the left side of the case, just above the control levers.
2. Loosen the locknut and back it off about 4–5 full turns.
3. Make sure that the screw turns freely. Use penetrating oil if it binds.
4. Tighten the screw to 72 inch lbs. (8 Nm).
5. Back off the screw 2½ turns for 1987–93 models. On 1994–95 models, back off the screw 2½ turns for the 2.5L engine and 2¼ turns for the 4.0L engine.
6. Tighten the locknut to 35 ft. lbs. (47 Nm). Hold the screw still while tightening the locknut.
7. Lower the vehicle.

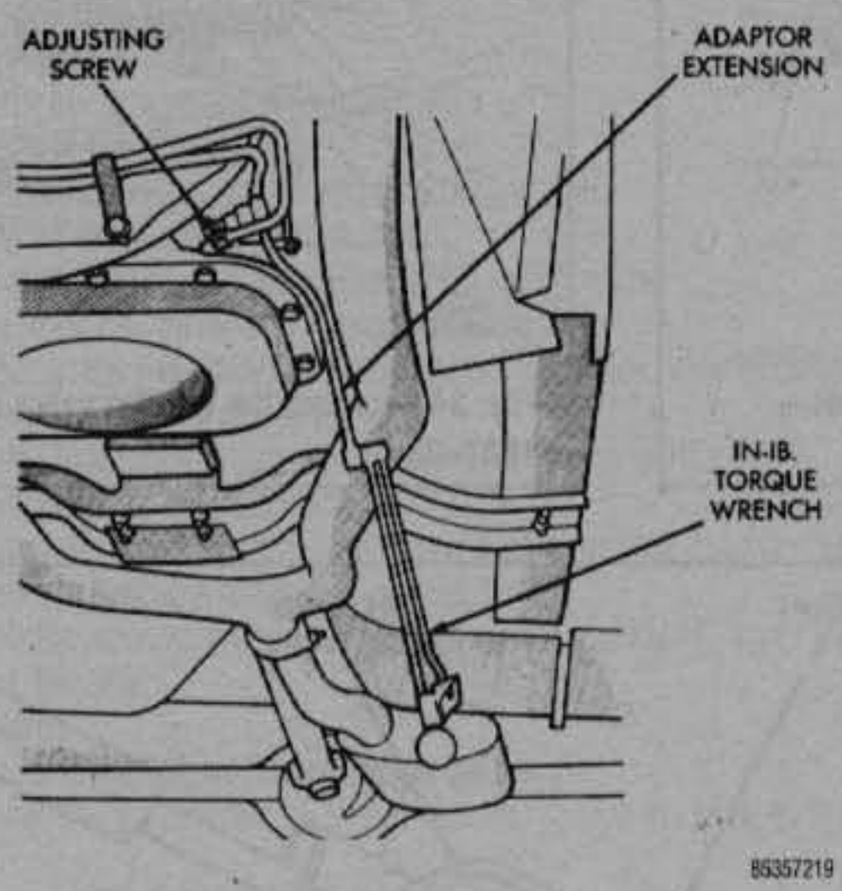

Fig. 29 Front band adjustment

REAR BAND

1987–93 Models

See Figure 30

1. Raise and support the vehicle on jackstands.
2. Drain the fluid and remove the pan.

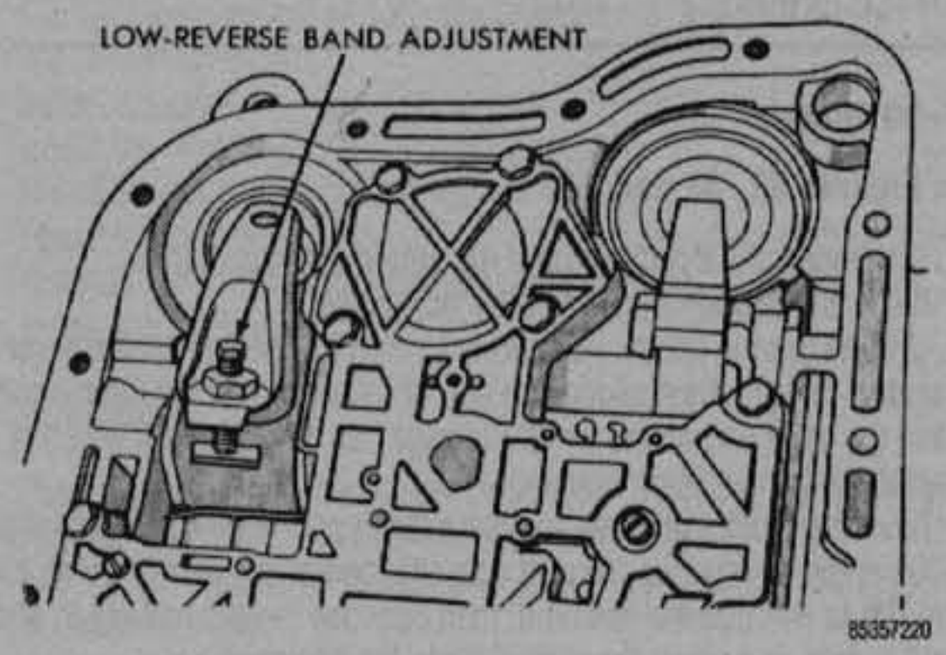

Fig. 30 Rear band adjustment—1987–93

3. Loosen the adjusting screw locknut 5–6 turns, making sure the adjusting screw turns freely in the lever.
4. Back off the adjusting screw 4 turns, then tighten the adjusting screw to 72 inch lbs. (8 Nm) using a torque wrench and a ¼ in. hex head socket.
5. Hold the adjusting screw still and tighten the locknut to 25 ft. lbs. (34 Nm).
6. Replace the pan and fill the unit with Dexron®II fluid.

1994–95 Models

See Figure 31

1. Raise and support the vehicle on jackstands.
2. Drain the fluid and remove the pan.
3. Loosen the adjusting screw locknut 5–6 turns, making sure the adjusting screw turns freely in the lever.
4. On the 2.5L engine, tighten the adjusting screw to 41 inch lbs. (5 Nm). On the 4.0L engine, tighten the adjusting screw to 72 inch lbs. (8 Nm).
5. Back off the adjusting screw 7 turns for the 2.5L engine and 4 turns for the 4.0L engine.
6. Hold the adjusting screw still and tighten the locknut to 25 ft. lbs. (34 Nm).
7. Replace the pan and fill the unit with Dexron®II fluid.

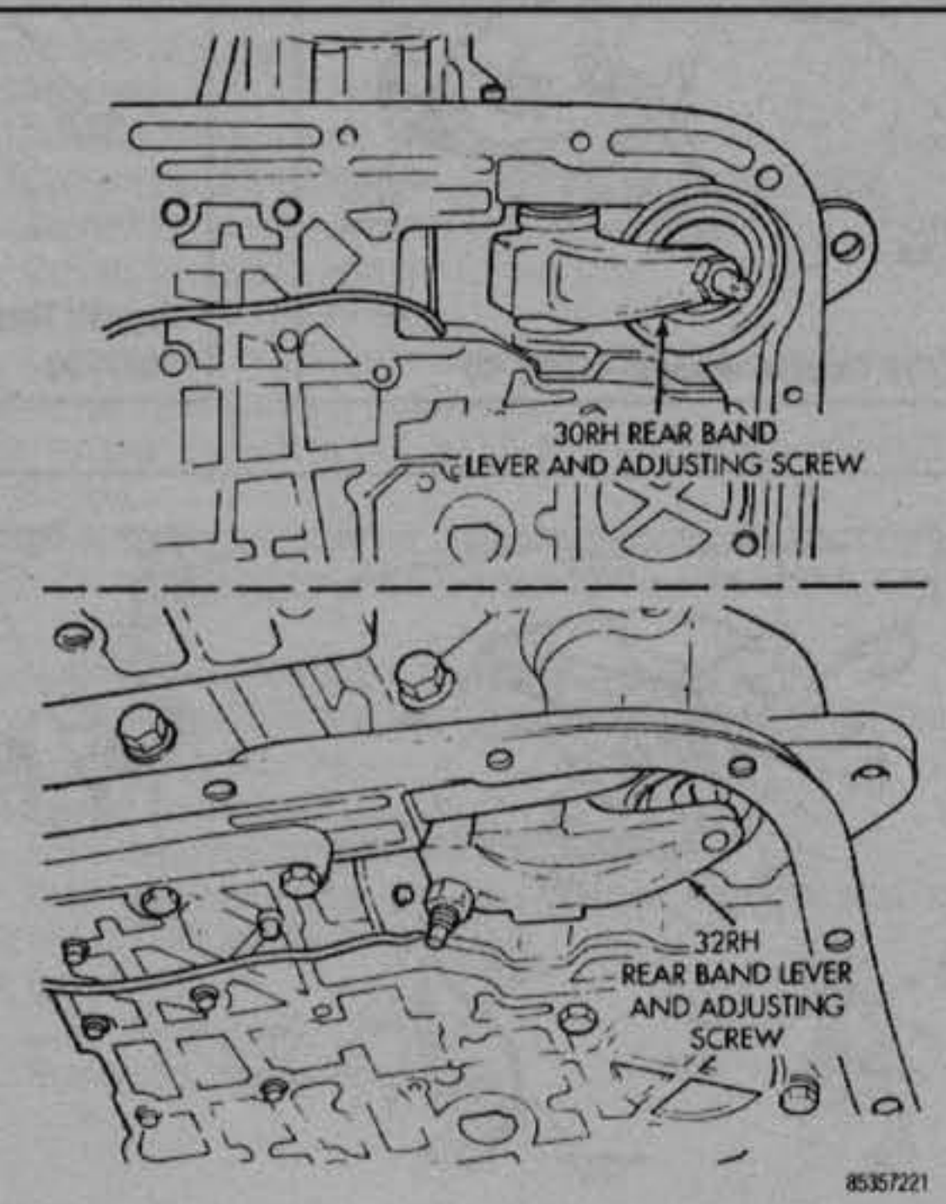

Fig. 31 Rear band adjustment

THROTTLE LINKAGE

1987–90 Models

See Figures 32, 33 and 34

1. Disconnect the throttle control rod spring at the carburetor.
2. Raise and support the vehicle on jackstands.
3. Use the throttle control rod spring to hold the throttle control lever forward against its stop, by hooking one end of the spring on the throttle control lever and the other end on the throttle linkage bell crank bracket which is attached to the transmission housing.
4. Block the choke plate open and move the throttle linkage off the fast idle cam.
5. On carburetors equipped with a throttle operated solenoid valve, turn the ignition **ON** to energize the solenoid, then open the throttle halfway to allow the solenoid to lock and return the carburetor to the idle position.
6. Loosen the retaining bolt on the throttle control adjusting link. DO NOT REMOVE THE SPRING CLIP AND NYLON WASHER!
7. Pull on the end of the link to eliminate play and tighten the retaining bolt.
8. Remove the throttle control rod spring and install it on the control rod from where it cam.
9. Lower the vehicle.

THROTTLE VALVE CABLE (KICKDOWN)

1991–95 Models

See Figures 35, 36 and 37

The throttle cable adjustment on these vehicles is performed entirely in the engine compartment. It is not necessary to raise the vehicle for access to any other components.

1. Shift the transmission into PARK and shut the engine off.
2. Press the cable release button.
3. Push the cable conduit back into the cable adjuster body as far as possible.
4. Rotate the throttle body lever to the wide open throttle position. The cable will ratchet to the correct adjustment point as the lever is rotated.

Neutral Safety/Back-up Light Switch

REMOVAL & INSTALLATION

See Figure 38

The switch is mounted in the transmission and has no direct adjustment. Proper operation is determined by correct shift linkage adjustment.

1. Raise and support the front end on jackstands.
2. Place a drain pan under the switch.
3. Unscrew the switch from the transmission.
4. Replace the switch, using a new seal. Tighten the switch to 24 ft. lbs. (33 Nm).
5. Refill the transmission.

Transmission

REMOVAL & INSTALLATION

1987–91 Models

1. Remove the fan shroud.
2. Disconnect the transmission fill tube upper bracket.

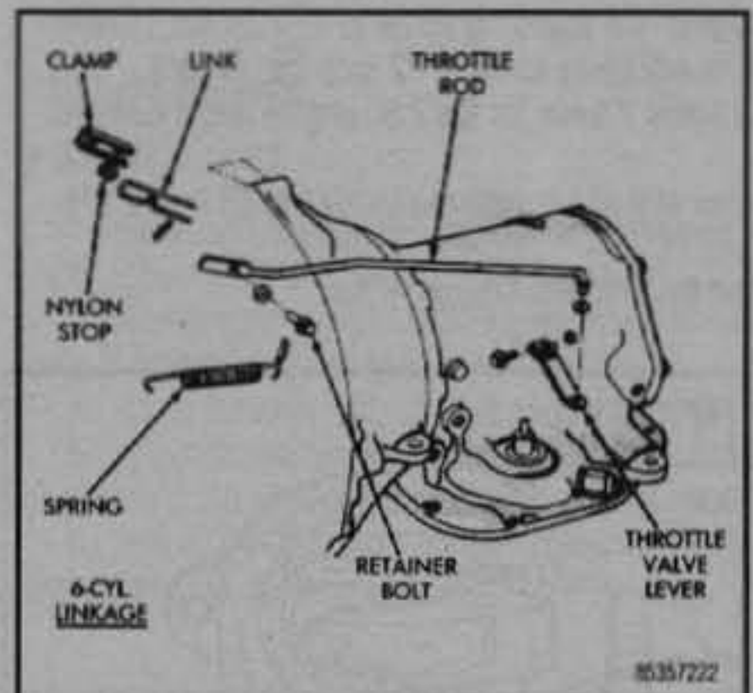

Fig. 32 Throttle linkage—1987–90

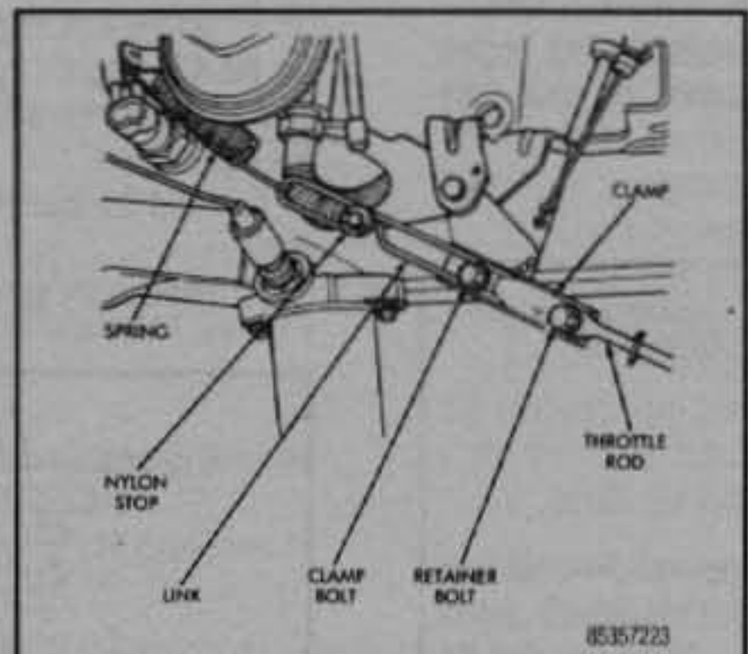

Fig. 33 Throttle linkage adjustment—1987–90

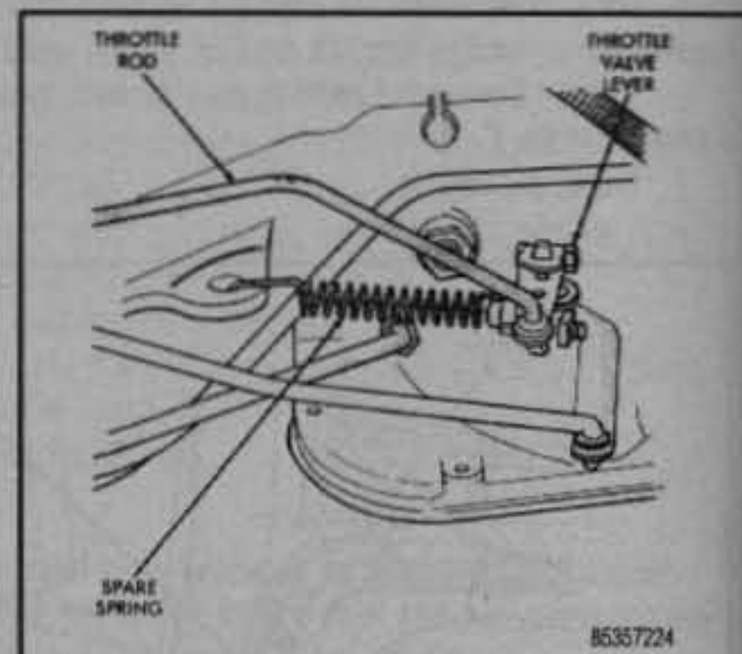

Fig. 34 Securing the throttle valve lever—1987–90

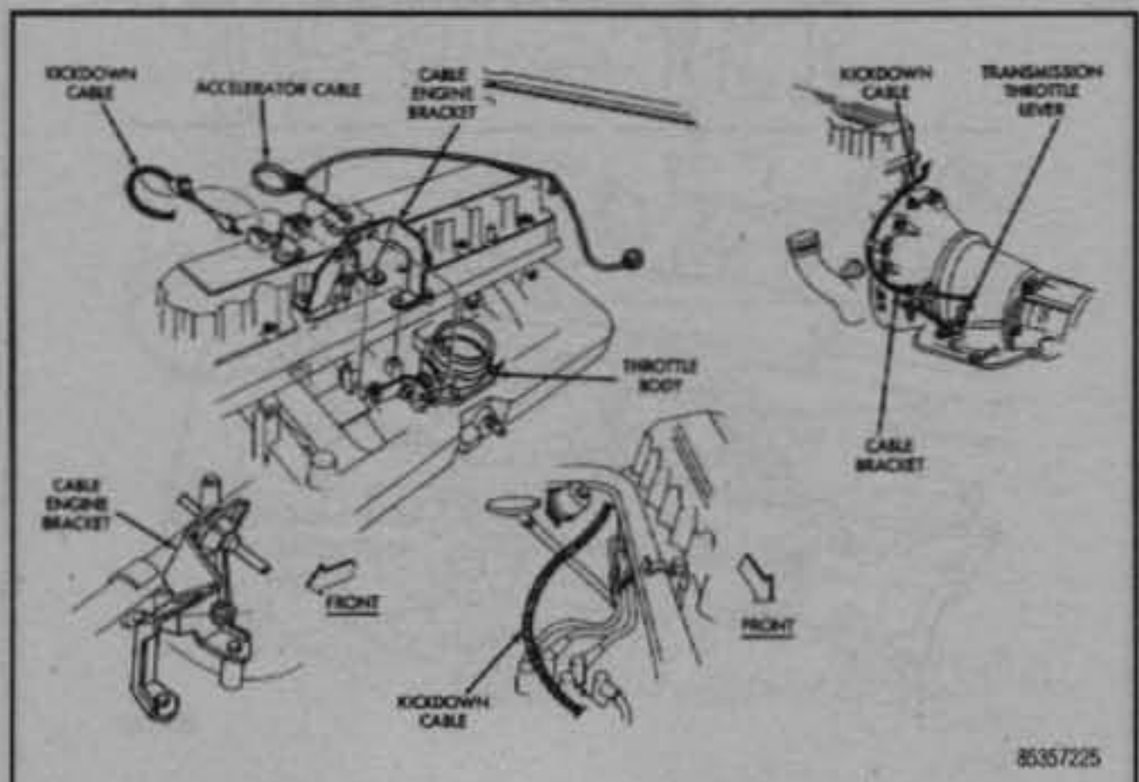

Fig. 35 Throttle valve cable—1991–95

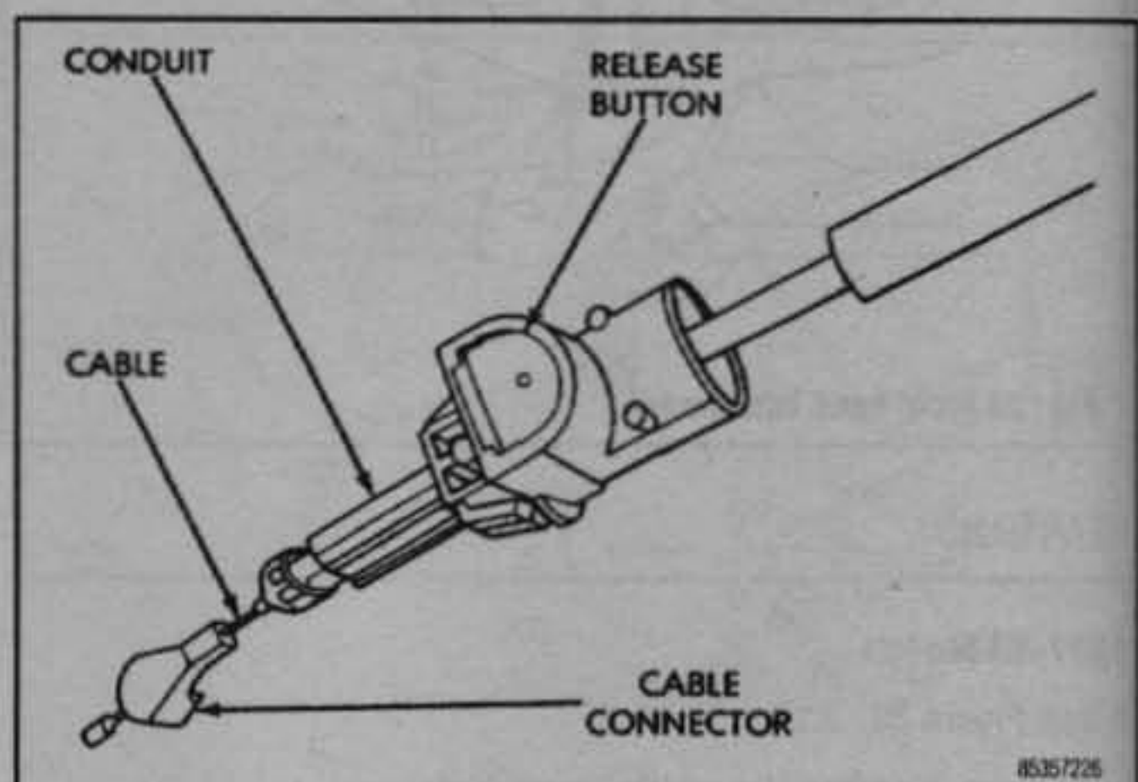

Fig. 36 Throttle cable components—1991–95

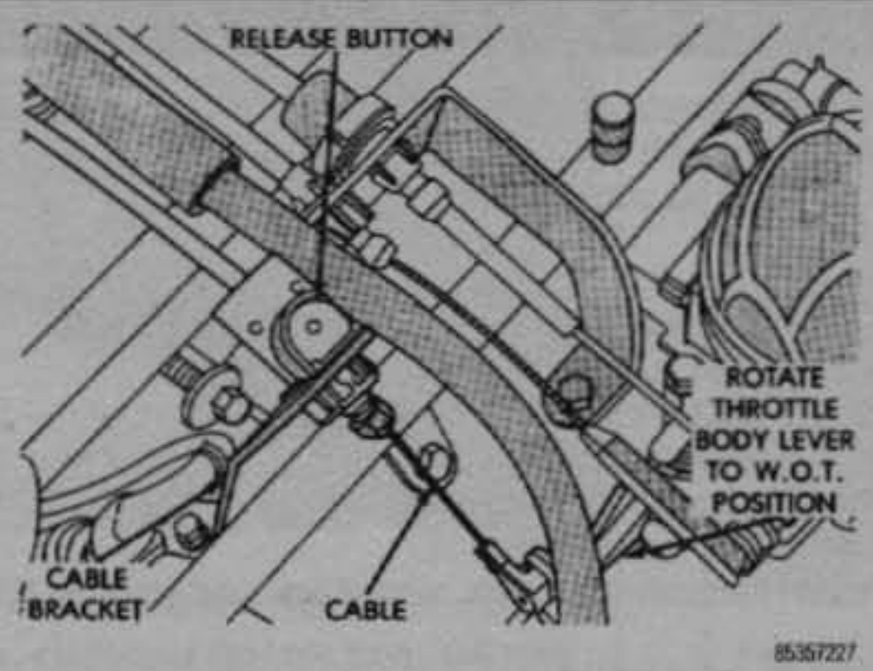

Fig. 37 Throttle cable adjustment—1991-95

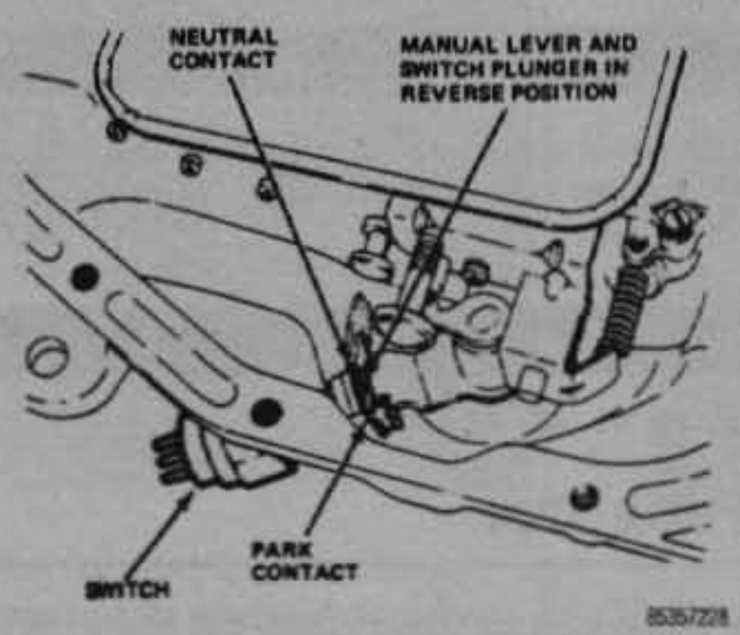

Fig. 38 Park/neutral position switch and manual lever

3. Raise and support the vehicle on jackstands.
4. Remove the converter housing inspection cover.
5. Remove the fill tube.
6. Remove the starter.
7. Mark the driveshafts for installation.
8. Remove the driveshafts.
9. Disconnect the gearshift and throttle linkages.
10. Disconnect the neutral start switch.
11. Mark the driveplate and converter for realignment.
12. Remove the converter-to-driveplate bolts.
13. Take up the transmission weight with a floor jack. It's a good idea to chain the transmission to the jack.
14. Remove the rear crossmember-to-transmission bolts.
15. Remove the rear crossmember.
16. Lower the transmission slightly and disconnect the fluid cooler lines.
17. Remove the transmission-to-engine bolts.
18. Roll the transmission rearward to clear the crankshaft, lower the jack and remove the unit.

To install:

19. Position the transmission against the engine.
20. Install the transmission-to-engine bolts. Torque the bolts to 28 ft. lbs. (38 Nm).
21. Connect the fluid cooler lines.
22. Install the rear crossmember. Torque the bolts to 30 ft. lbs. (41 Nm).
23. Install the rear crossmember-to-transmission bolts. Torque the bolts to 33 ft. lbs. (45 Nm).
24. Install the converter-to-driveplate bolts. Torque the bolts to 40 ft. lbs. (54 Nm).
25. Connect the neutral start switch.
26. Connect the gearshift and throttle linkages.
27. Install the driveshafts.
28. Install the starter.
29. Install the fill tube.
30. Install the converter housing inspection cover.
31. Lower the vehicle.
32. Connect the transmission fill tube upper bracket.
33. Install the fan shroud.

1992–95 Models

1. Disconnect the negative battery cable.
2. Raise and support the vehicle safely.
3. Matchmark the rear driveshaft and yoke for reassembly. Disconnect and remove the rear driveshaft.
4. Remove the torque converter inspection cover.
5. Matchmark the converter driveplate and converter assembly for reassembly.
6. Remove the bolts attaching the torque converter to the flexplate.
7. Support the transmission assembly with a jack.
8. Remove the bolts attaching the rear crossmember to the transmission side rail.
9. Disconnect the exhaust pipe at the catalytic converter.
10. Lower the transmission slightly in order to disconnect the fluid cooler lines.
11. Matchmark the front driveshaft assembly for installation.
12. Disconnect the driveshaft at the transfer case and secure the assembly aside.
13. Disconnect the back-up light switch wire and speedometer cable.
14. Disconnect the transfer case and transmission linkage.
15. Disconnect the vacuum lines and vent hose.
16. Remove the bolts attaching the transmission assembly to the engine.
17. Move the transmission assembly and torque converter rearward to clear the crankshaft.
18. Carefully lower the transmission assembly from the vehicle.
19. Remove the transfer case retaining bolts from the transmission assembly.

To install:

20. If the transmission and transfer case were separated, re-attach them and torque the bolts to 26 ft. lbs. (35 Nm).
21. Carefully raise the transmission into position.
22. Install the bolts attaching the transmission assembly to the engine. Torque the bolts as follows:
    - 10mm bolts: 25 ft. lbs. (34 Nm)
    - 12mm bolts: 42 ft. lbs. (57 Nm)
23. Connect the back-up light switch wire and speedometer cable.
24. Connect the transfer case and transmission linkage.
25. Connect the vacuum lines and the vent hose.
26. Connect the fluid cooler lines.
27. Connect the driveshaft at the transfer case. New strap bolts should be used whenever the driveshaft is disconnected.

Torque the strap bolt nuts to 14 ft. lbs (19 Nm); the flange-to-case bolts to 35 ft. lbs. (47 Nm).

28. Install the rear crossmember. Torque the crossmember attaching bolts to 30 ft. lbs. (41 Nm); the transmission-to-crossmember bolts to 33 ft. lbs. (45 Nm).
29. Connect the exhaust pipe at the catalytic converter.
30. Install the bolts attaching the torque converter to the flexplate. Torque the bolts to 40 ft. lbs. (61 Nm).
31. Remove the floor jack.
32. Install the torque converter inspection cover.
33. Install the rear driveshaft. Use new strap bolts. Torque the strap bolt nuts to 14 ft. lbs. (19 Nm) and the flange bolts to 35 ft. lbs. (47 Nm).
34. Lower the vehicle.
35. Connect the negative battery cable.

TRANSFER CASE

Transfer Case

REMOVAL & INSTALLATION

1. Shift the case into 4H.
2. Raise and support the Jeep on jackstands.
3. Drain the case.
4. Matchmark the rear driveshaft and remove it.
5. Disconnect the speedometer cable, vacuum hoses and vent hose from the case.
6. Support the transmission with a floor jack.
7. Remove the rear crossmember.
8. Matchmark the front driveshaft and remove it.
9. Disconnect the shift lever linkage rod at the case.
10. Remove the shift lever bracket bolts.
11. Support the transfer case with a floor jack or transmission jack and remove the attaching bolts.
12. Pull the case out of the Vehicle.

To install:

13. Install the case.
14. Install the attaching bolts. Torque them to 26 ft. lbs. (35 Nm).
15. Install the shift lever bracket bolts.
16. Connect the shift lever linkage rod at the case.
17. Install the front driveshaft.
18. Install the crossmember. Torque the frame bolts to 30 ft. lbs. (41 Nm); the case bolts to 33 ft. lbs. (45 Nm).
19. Connect the speedometer cable, vacuum hoses and vent hose at the case.
20. Install the rear driveshaft.
21. Fill the case.
22. Lower the vehicle.

DRIVELINE

Front Driveshaft and U-Joints

The front driveshaft has a single cardan universal joint at each end. A slip yoke is used to attach the shaft to the front axle yoke.

The rear driveshaft is one-piece with a single cardan universal joint at each end. A slip yoke is used to attach the shaft to the transfer case output yoke.

Some slip joints are marked with arrows at the spline and sleeve yoke. When installing, align the arrows. If the slip joint is not marked with arrows, align the yokes at the front and rear of the shaft in the same horizontal plane. Scribe alignment marks as necessary for correct installation in order to avoid vibration in the drive train.

REMOVAL & INSTALLATION

See Figures 39 and 40

1. Raise and safely support the vehicle.
2. Scribe alignment marks on the yokes at the transfer case, at the drive pinion gear shaft at each end of the driveshaft for installation reference.
3. Remove the U-bolt strap bolts at the drive pinion gear shaft (axle) yoke.
4. Disconnect the driveshaft at the transfer case and remove the driveshaft.

To install:

5. Position the driveshaft with the yoke installation reference marks aligned at the transfer case and the drive pinion gear shaft yokes.
6. With the driveshaft in the correct position, use new U-joint straps and bolts and tighten the bolts to 14 ft. lbs. (19 Nm).
7. Lower the vehicle.

Rear Driveshaft and U-Joints

See Figures 39, 41, 42, 43 and 44

REMOVAL & INSTALLATION

1. Shift the transmission and transfer case to their neutral positions.
2. Raise and safely support the vehicle.
3. Scribe alignment marks at the drive pinion gear shaft and at the rear of the driveshaft for installation reference.
4. Remove the U-bolt strap bolts at the drive pinion gear shaft (axle) yoke.
5. Disconnect the driveshaft at the transfer case output shaft and remove the driveshaft.

To install:

6. Slide the slip yoke on the transfer case output shaft and align the installation reference marks at the drive pinion gear shaft yoke and install the driveshaft.
7. With the driveshaft in the correct position, use new U-jount straps and bolts and tighten the bolts to 14 ft. lbs. (19 Nm).
8. Lower the vehicle.

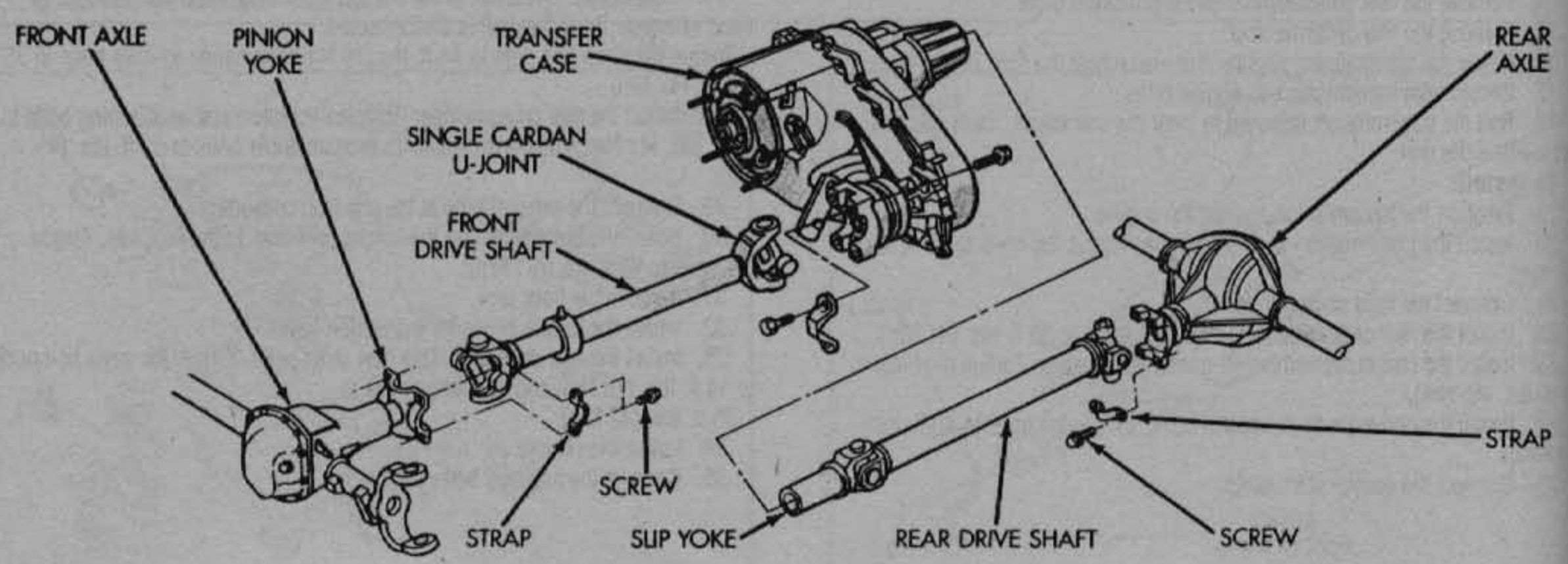

Fig. 39 Exploded view of the front and rear driveshafts

Fig. 40 After removing the U-bolt strap bolts, disconnect the front driveshaft from the yokes

Fig. 41 Removing the U-bolts from the retaining strap at the rear axle yoke

Fig. 42 Removing the U-bolt strap at the rear axle yoke

Fig. 43 After removing the U-bolt strap bolts, disconnect the driveshaft from the rear axle yoke

Fig. 44 Removing the rear driveshaft from the transfer case

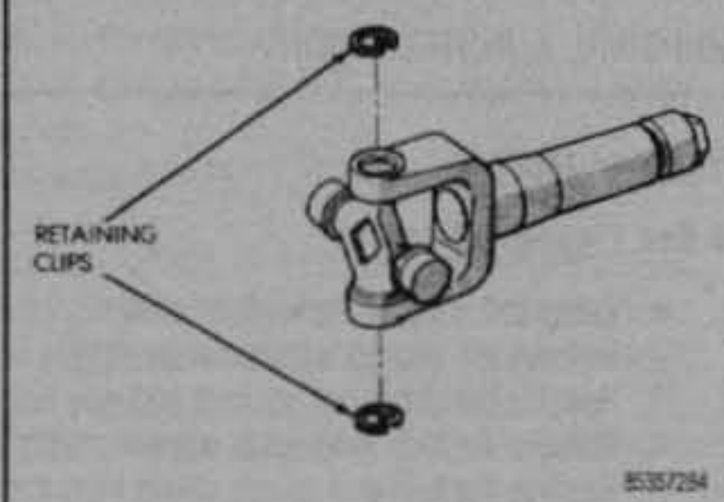

Fig. 45 Bearing cap retaining clips

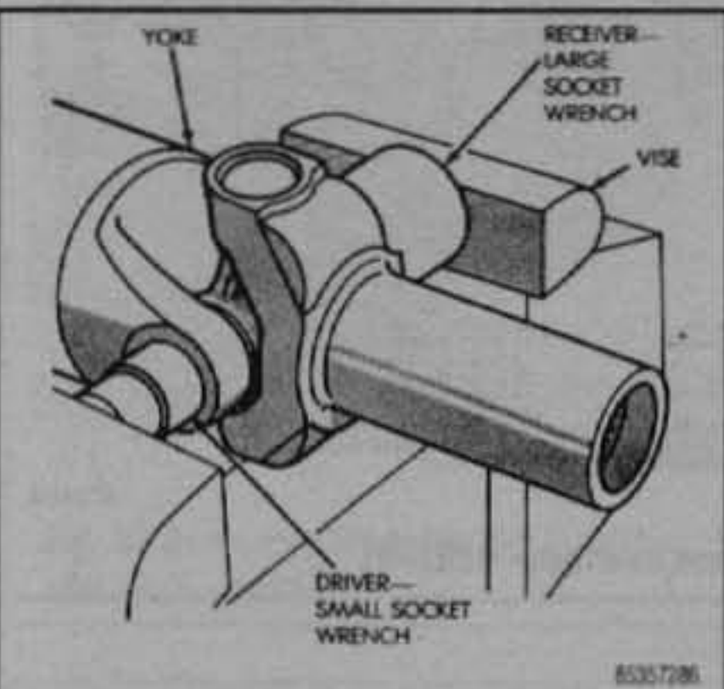

Fig. 46 Bearing cap removal

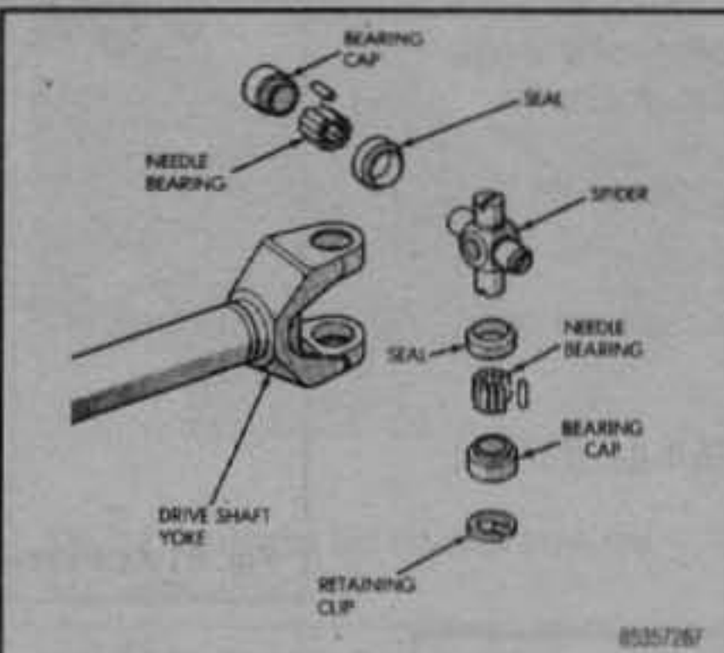

Fig. 47 Exploded view of the single cardan U-joint

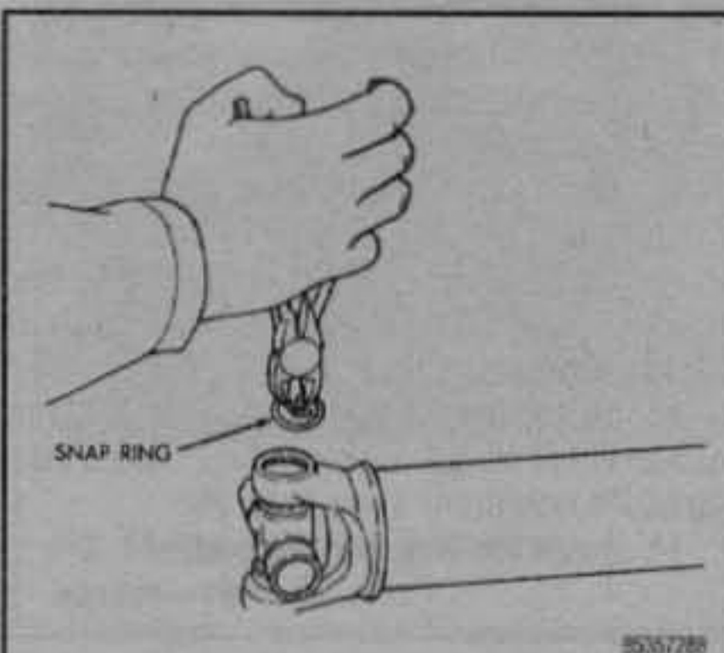

Fig. 48 Snap ring removal

U-JOINT REPLACEMENT

See Figures 45, 46, 47, 48 and 49

All Wranglers use a single cardan universal joints. These U-joints are not serviceable and must be replaced as a unit if found to be defective.

1. Remove the driveshaft as outlined earlier.
2. Clamp the yoke, not the tube, in a vise.
3. Saturate the bearing caps with penetrating oil prior to removal and remove the bearing cap retainer clips.
4. Support the yoke on the vise jaws.
5. Locate a socket that is larger in diameter than the bearing cap. Place the socket against the yoke and around the perimeter of the first bearing cap to be removed. This will be the bearing cap receiver. Locate a socket that is smaller in diameter than the bearing cap. Place the socket against the opposite bearing cap. This will be the bearing cap driver. Position the yoke with the sockets in a vise.

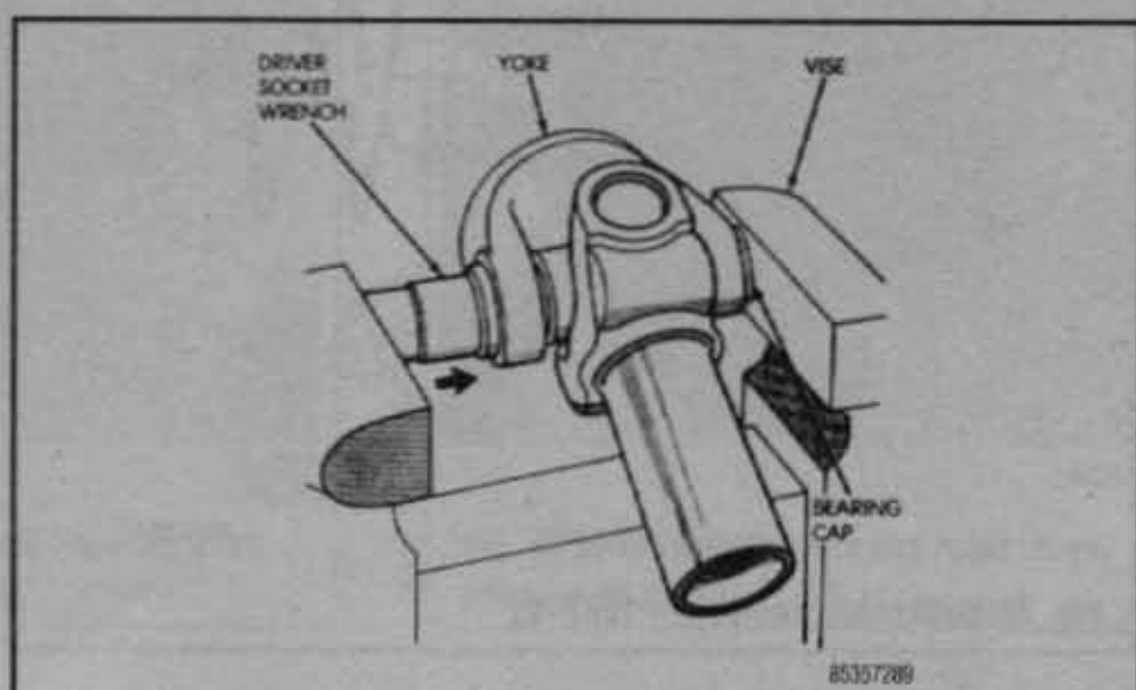

Fig. 49 Bearing cap installation

6. Compress the vise jaws to force the bearing cap into the larger socket.
7. Release the vise jaws. Remove the sockets and bearing cap that was partially forced out of the yoke.
8. Place the larger socket around the perimeter of the remaining bearing cap. Place the smaller socket against the spider. Position the yoke with the sockets in a vise.
9. Compress the vise jaws to force the remaining bearing cap out of the yoke.
10. Remove the yoke and sockets from the vise.
11. Remove the remaining bearing cap, bearings, seals and spider from the driveshaft yoke.

To install:

12. Apply extreme pressure (EP), lithium-base lubricant to aid in installation.
13. Position the spider in the yoke. Insert the seals and bearings. Tap the bearing caps into the yoke bores far enough to hold the spider in position.

WARNING

Do not clamp the driveshaft tube in a vise. Clamp only the forged portion of each yoke in the vise, being careful not to over tighten and possibly distorting the yoke.

14. Locate a socket that is smaller in diameter than the yoke bore. Place the socket against one bearing cap. Position the yoke with the socket in a vise.
15. Compress the vise jaws to force the bearing caps into the yoke with the socket. Force the caps into the yoke bores far enough to install the retaining clips.
16. After the bearing caps are completely seated install the retaining clips.
17. Reinstall the driveshaft as previously outlined.

FRONT DRIVE AXLE

Axle Shaft, Bearing and Seal

REMOVAL & INSTALLATION

1987–91 Models

See Figures 50 and 51

1. Raise and support the vehicle safely.
2. Remove the wheels, calipers and rotors.
3. Remove the cotter pin, locknut and axle hub nut.
4. Remove the hub-to-knuckle attaching bolts.
5. Remove the hub and splash shield from the steering knuckle.
6. To remove the left shaft, remove the axle shaft from the housing.
7. To remove the right shaft:
   a. Disconnect the vacuum harness from the shift motor.
   b. Remove the shift motor from the housing.
   c. Remove the axle shaft from the housing.
8. To install the right axle shaft first be sure that the shift collar is in position on the intermediate shaft and that the axle shaft is fully engaged in the intermediate shaft end.
9. Install the shift motor, making sure that the fork engages with the collar. Tighten the bolts to 96 inch lbs. (11 Nm).
10. On the left side, install the axle shaft in the housing.
11. Partially fill the hub cavity of the knuckle with chassis lube and install the hub and splash shield.
12. Tighten the hub bolts to 75 ft. lbs. (102 Nm).
13. Install the hub washer and nut. Torque the nut to 175 ft. lbs. (237 Nm). Install the locknut and a new cotter pin.
14. Install the rotor, caliper and wheel.

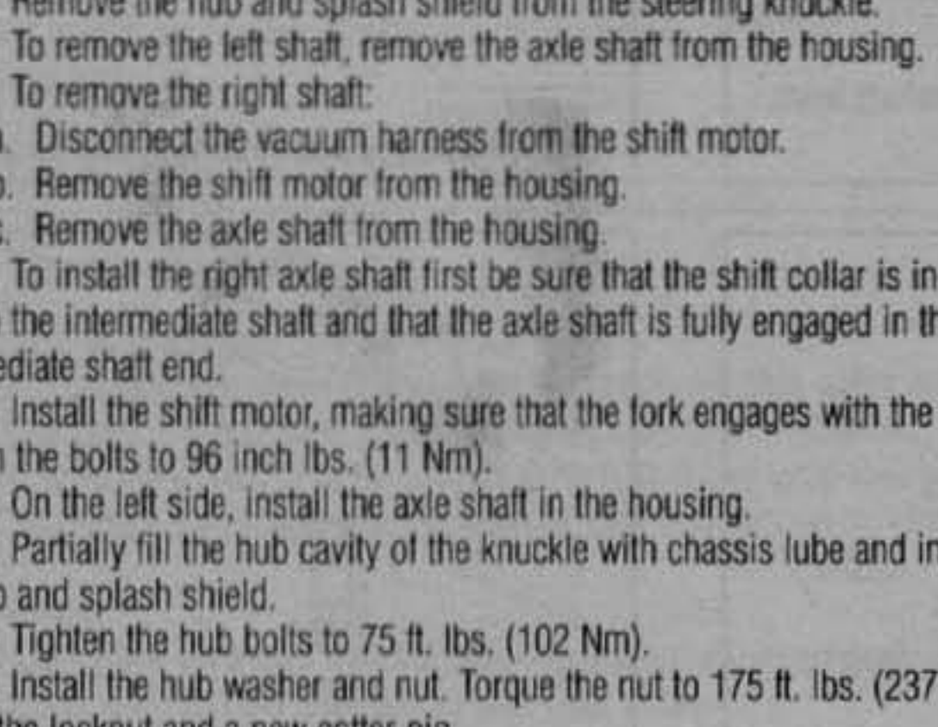

Fig. 50 Shift motor removal—1987–91

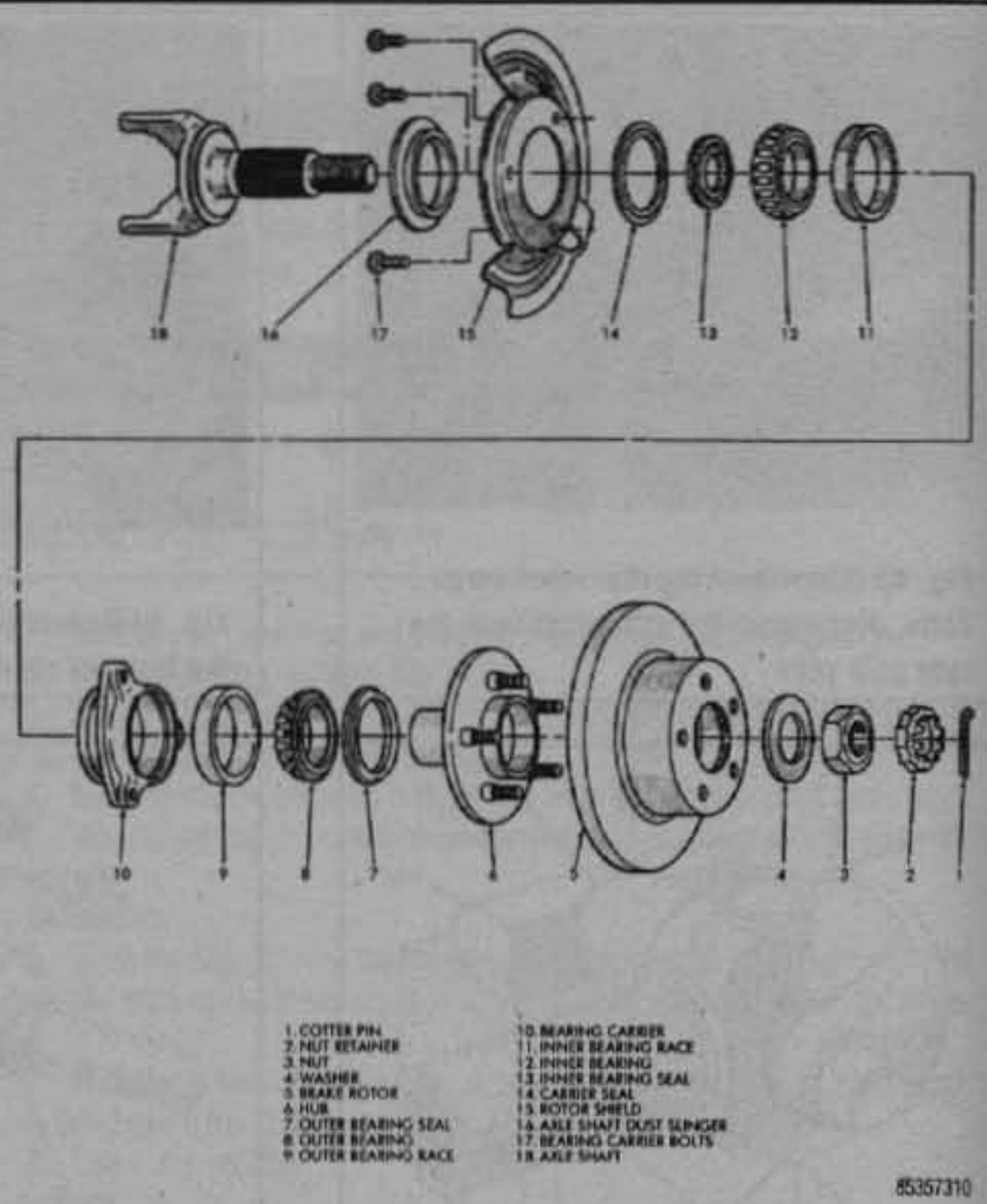

Fig. 51 Axle shaft, hub and bearings—1987–91

1992–95 Models

See Figures 52 thru 59

1. Raise and support the vehicle safely.

CAUTION

Brake linings may contain asbestos. Asbestos is a known cancer-causing agent. When working on brakes, remember that the dust which accumulates on the brake parts and/or in the drum may contain asbestos. Always wear a protective face covering, such as a painter's mask, when working on the brakes. NEVER blow the dust from the brakes or drum! There are solvents made for the purpose of cleaning brake parts. Use them!

2. Remove the wheels and brake assemblies.

For vehicles equipped with Anti-Lock Brakes (ABS), refer to Section 9 for the proper procedures concerning brake removal.

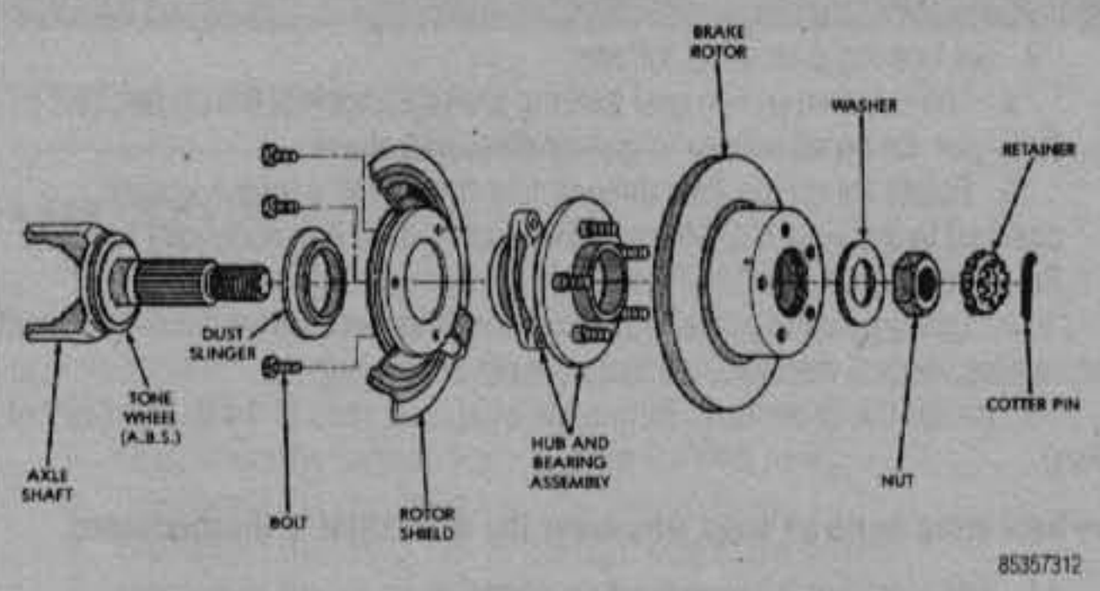

Fig. 52 Front rotor, hub and axle shaft—1991–95

3. Remove the cotter pin, locknut and axle hub nut.
4. Remove the hub-to-knuckle attaching bolts.
5. Remove the hub and splash shield from the steering knuckle.
6. Remove the left axle shaft from the housing.
7. If equipped with Command-Trac®, disconnect the vacuum harness from the shift motor and remove the shift motor from the housing.
8. Remove the right axle shaft from the housing.

To install:

9. Insert the left and right axle shafts into the axle tube.
10. To install the right axle shaft (with Command-Trac®) first be sure that the shift collar is in position on the intermediate shaft and that the axle shaft is fully engaged in the intermediate shaft end.
11. If equipped with Command-Trac®, install the shift motor, making sure that the fork engages with the collar. Tighten the bolts to 8 ft. lbs. (11 Nm).
12. On the left side, install the axle shaft in the housing.
13. Partially fill the hub cavity of the knuckle with chassis lube and install the hub and splash shield.
14. Tighten the hub bolts to 75 ft. lbs. (102 Nm).
15. Install the hub washer and nut. Torque the nut to 175 ft. lbs. (237 Nm). Install the locknut and a new cotter pin.
16. Install the brake assemblies.
17. Lower the vehicle.

Pinion Seal and Yoke

REMOVAL & INSTALLATION

1987–90 Models

See Figures 60, 61, 62 and 63

1. Raise and safely support the front end on jackstands.
2. Matchmark and disconnect the driveshaft from the yoke.
3. Using a yoke holding tool, such as J-8614-01, or its equivalent on the yoke, and remove the pinion nut.
4. Remove the yoke, using tools J-8614-01, -02, and -03, or their equivalents.
5. Using tool seal removal tool -25180, or its equivalent, remove the seal.
6. Coat the new seal's outer rim with sealer, then install it using a driver.
7. Install the yoke, pinion washer and a new pinion nut. Torque the nut to 210 ft. lbs. (285 Nm).
8. Connect the driveshaft, then check and refill the differential housing fluid as necessary.

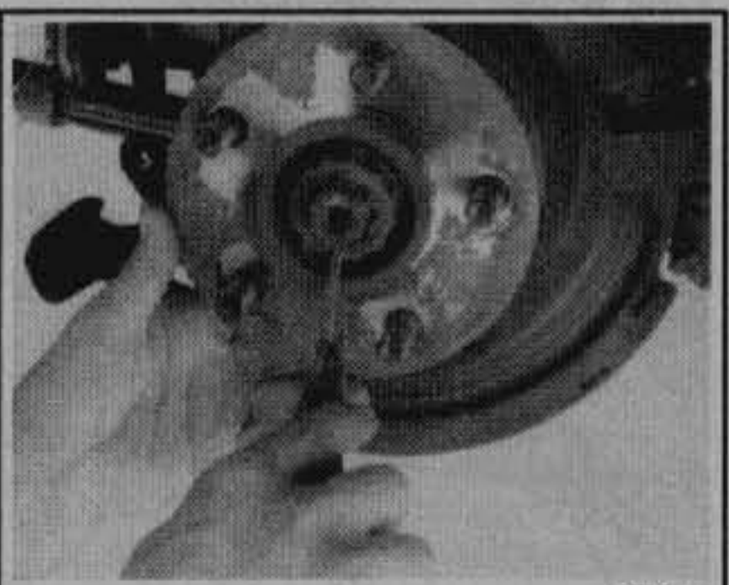

Fig. 53 Removing the cotter pin from the axle shaft—1991–95

Fig. 54 Removing the retainer from the axle shaft—1991–95

Fig. 55 Removing the axle nut and washer—1991–95

Fig. 56 Removing the three hub-to-steering knuckle bolts—1991–95

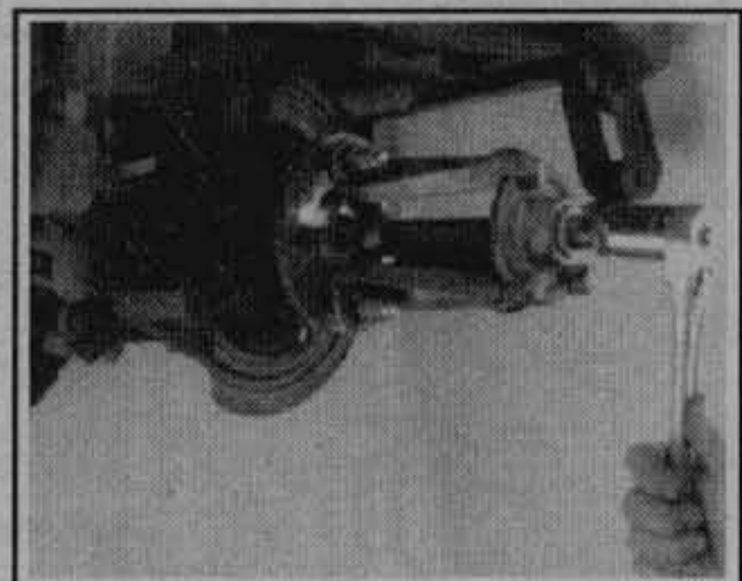

Fig. 57 Removing the hub from the shaft using a puller—1991–95

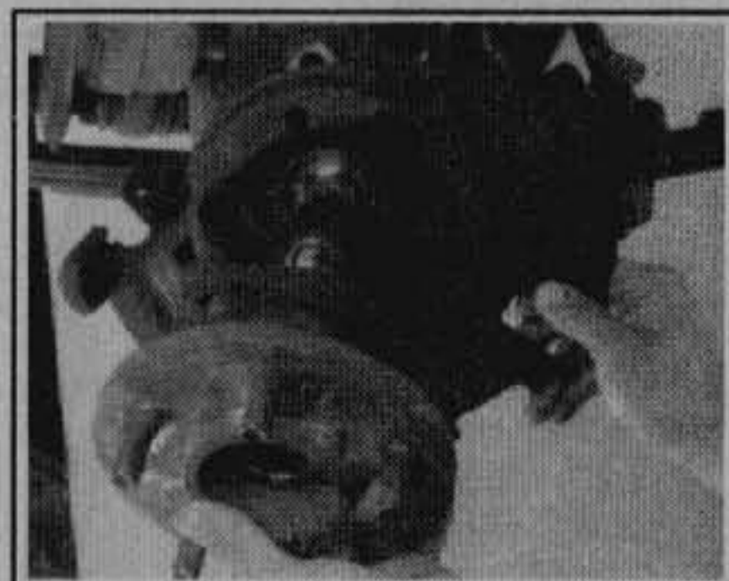

Fig. 58 Removing the hub and rotor shield from the shaft—1991–95

1991–95 Models

See Figures 64, 65, 66 and 67

1. Raise and support the vehicle safely.
2. Matchmark and remove the driveshaft.
3. Rotate the pinion gear three or four times with a torque wrench attached to the yoke nut. Measure the amount of torque necessary to rotate the pinion. Note for installation reference.
4. Matchmark the pinion yoke and gear for installation reference.
5. Using a holding tool, remove the pinion yoke nut and washer. Discard the nut.
6. Punch the seal with a pin punch and pry it from the seal bore.

To install:

7. Apply gear lubricant to the lip of the replacement seal and install using a seal installation tool.
8. Install the yoke, noting the reference marks. Tighten just enough to remove the end-play.
9. Set bearing preload as follows:
   a. The required pinion gear bearing preload torque is 6 inch lbs. (0.7 Nm) over the noted release torque as measured above.
   b. Rotate the pinion gear three or four times with a torque wrench attached to the yoke nut. Measure the amount of torque necessary to rotate the pinion.
   c. Using a holding tool and tighten the yoke nut in small increments and remeasure until the specified torque is obtained.
10. Install the driveshaft. Torque the strap bolt nuts to 14 ft. lbs. (19 Nm).

New strap bolts be used whenever the driveshaft is disconnected.

11. Add lubricant if necessary. Lower vehicle.

Fig. 59 Removing the front axle shaft assembly from the vehicle—1991–95

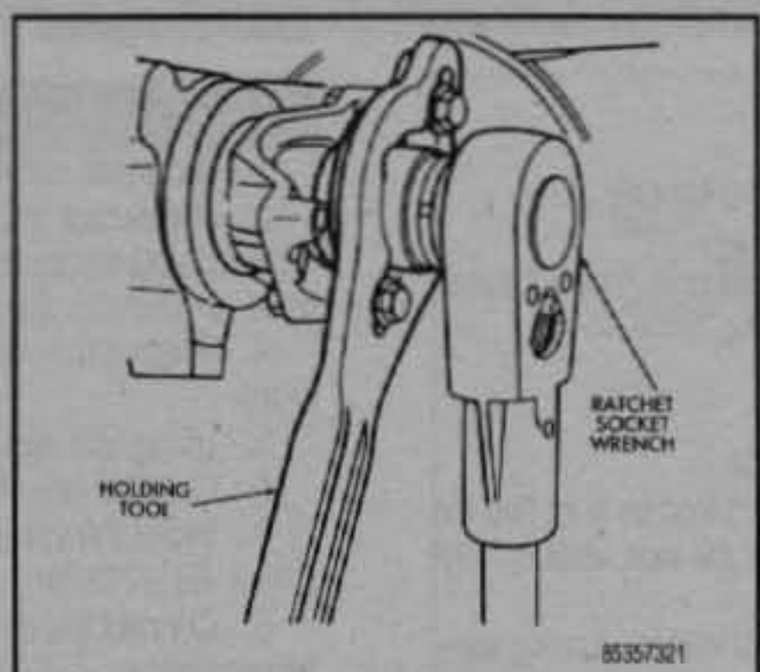

Fig. 60 Yoke retaining nut removal—1987–90

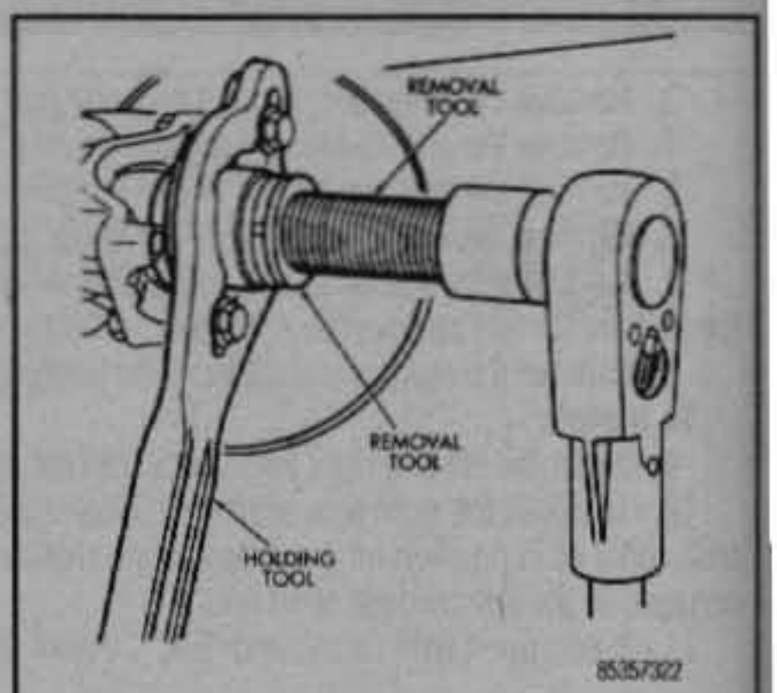

Fig. 61 Yoke removal—1987–90

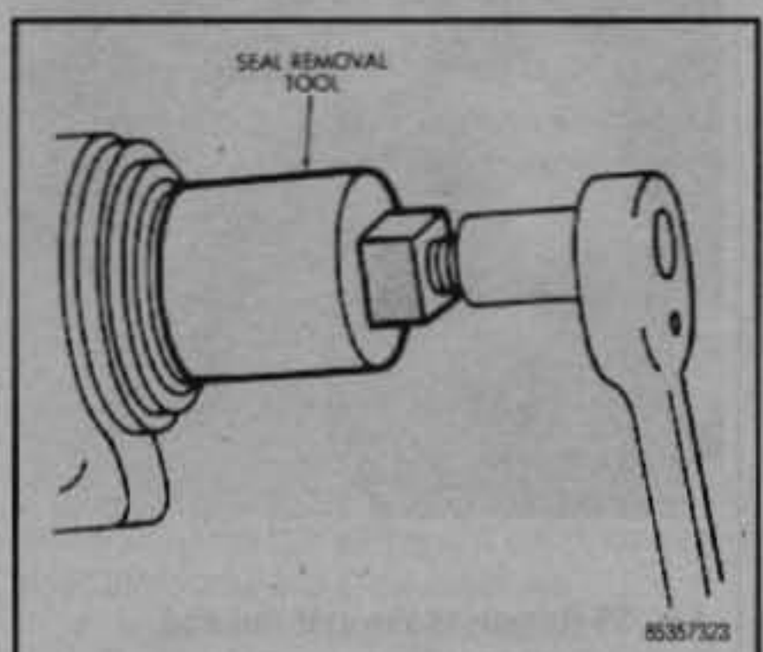

Fig. 62 Drive pinion gear shaft seal removal—1987–90

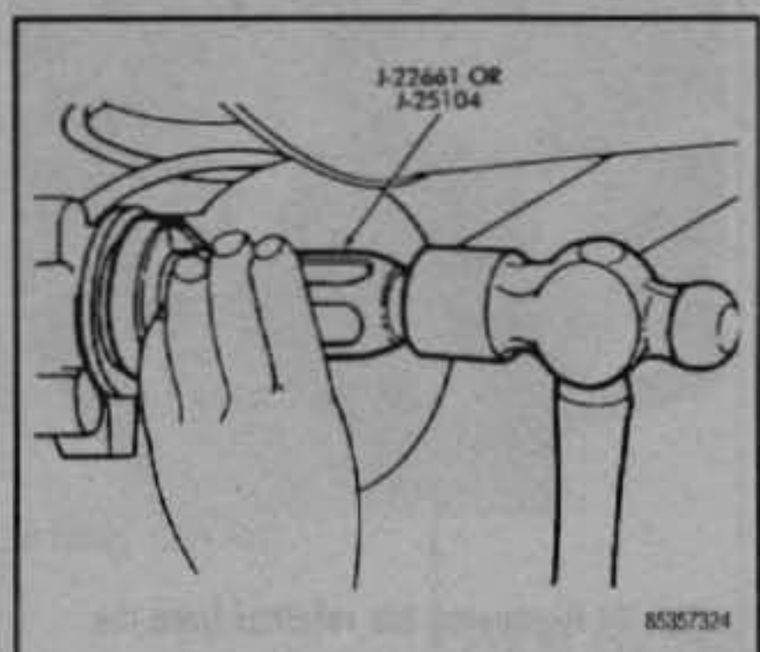

Fig. 63 Drive pinion gear shaft seal installation—1987–90

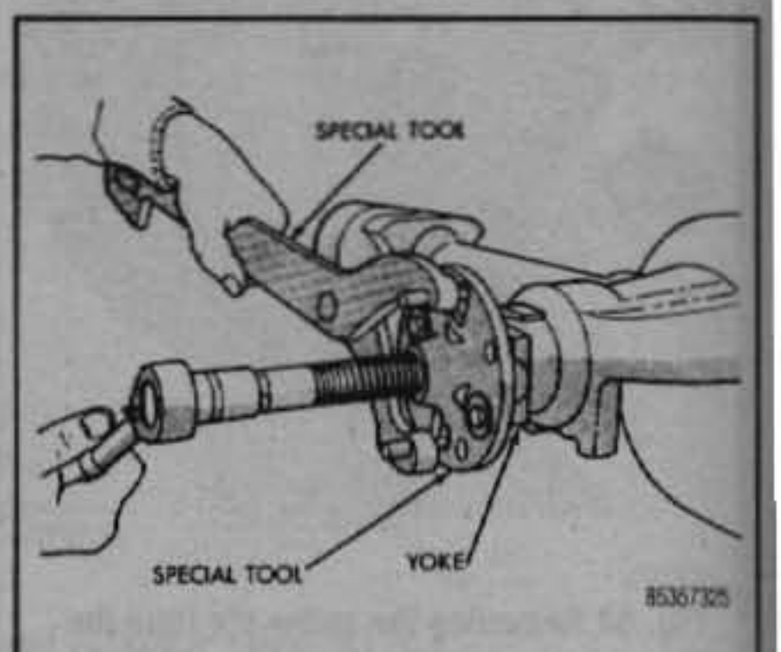

Fig. 64 Yoke retaining nut removal—1991–95

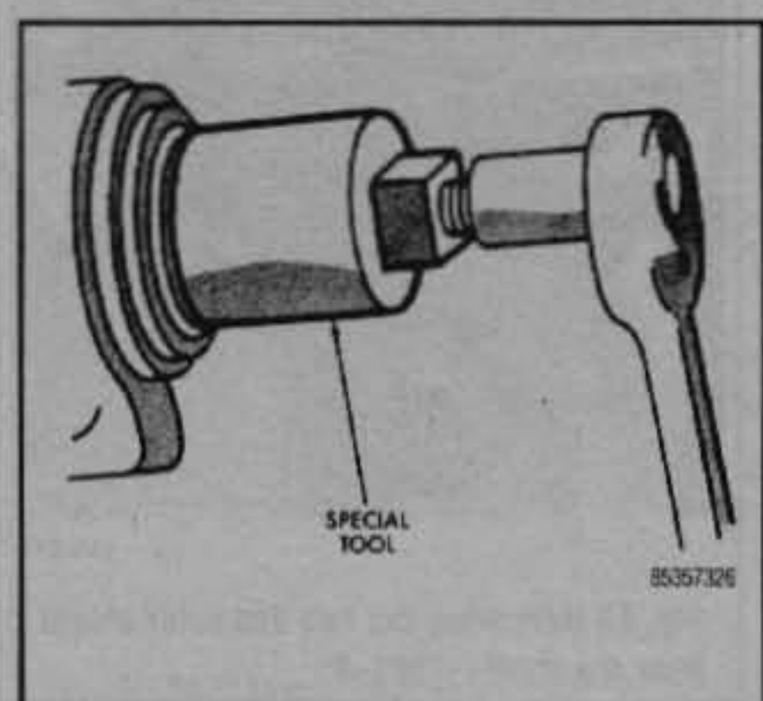

Fig. 65 Pinion seal removal—1991–95

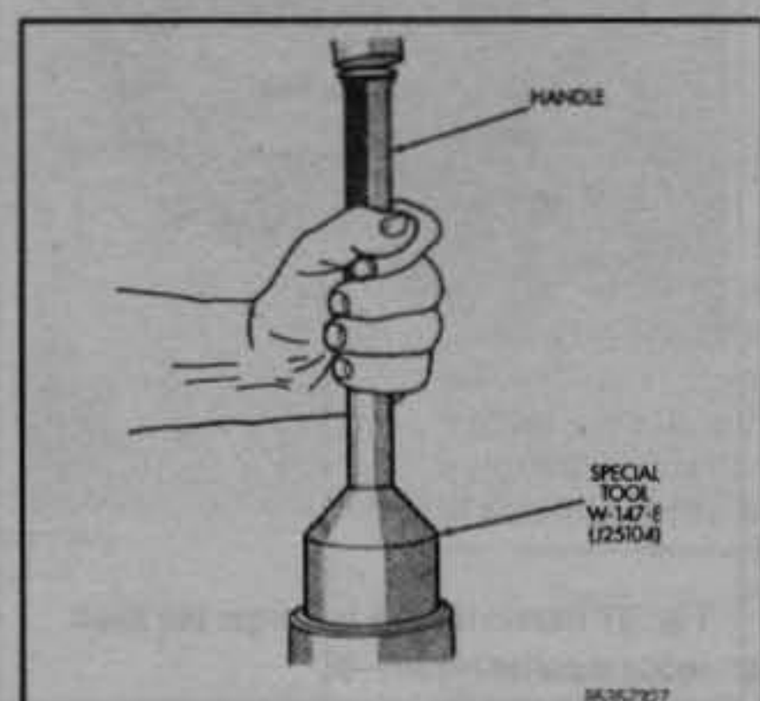

Fig. 66 Pinion seal installation—1991–95

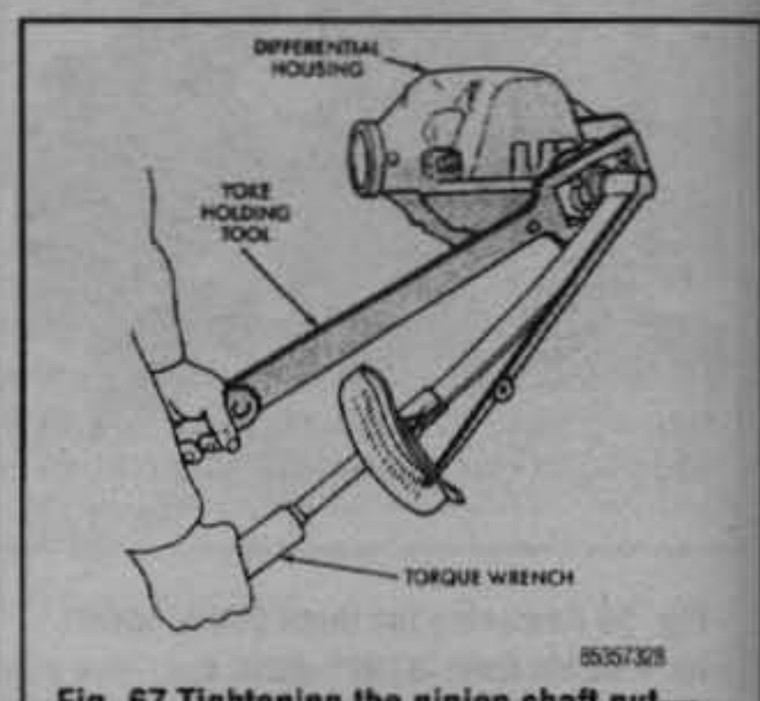

Fig. 67 Tightening the pinion shaft nut—1991–95

Front Axle Unit

REMOVAL & INSTALLATION

See Figure 68

1. Raise and support the vehicle safely. Remove the wheels.
2. Index the driveshaft to the differential yoke for the proper alignment upon installation. Disconnect the driveshaft at the axle yoke and secure the shaft to the frame rail.
3. Disconnect the vacuum harness from the shift motor.
4. Disconnect the vent hose from the axle housing.
5. Disconnect the center link at the right side of the tie rod.
6. Disconnect the shock absorbers at the axle.
7. Remove the steering damper.
8. Disconnect the track bar at the axle.
9. Loosen the stabilizer bar links at the bar and disconnect the stabilizer bar from the spring tie plates.
10. Loosen the bolts attaching the spring to the frame brackets.
11. Loosen the spring-to-shackle bolts.
12. Take up the weight of the axle with a floor jack.
13. Remove the spring U-bolts and tie plates.
14. Remove the front shackle bolts and remove the axle from the vehicle.

To install:

15. Raise the axle into position.
16. Install the front shackle bolts.
17. Install the spring U-bolts and tie plates. Torque the U-bolt nuts to 90 ft. lbs. (122 Nm).
18. Tighten the spring-to-shackle bolts.
19. Tighten the bolts attaching the spring to the frame brackets.
20. Connect the stabilizer bar to the spring tie plates.
21. Tighten the stabilizer bar links at the bar. Torque the bolts to 45 ft. lbs. (61 Nm).
22. Connect the track bar to the axle. Torque the fasteners to 74 ft. lbs. (100 Nm).
23. Install the steering damper. Torque the steering damper-to-axle fasteners to 55 ft. lbs. (75 Nm).
24. Connect the shock absorbers to the axle. Torque the lower shock absorber bolt to 45 ft. lbs. (61 Nm).
25. Connect the center link to the right side of the tie rod. Torque the center link-to-knuckle to 35 ft. lbs. (47 Nm) and the tie rod-to-knuckle to 35 ft. lbs. (47 Nm).
26. Connect the vent hose at the axle housing.
27. Connect the vacuum harness to the shift motor.
28. Connect the driveshaft at the axle yoke.
29. Install the wheels.
30. Lower the vehicle.

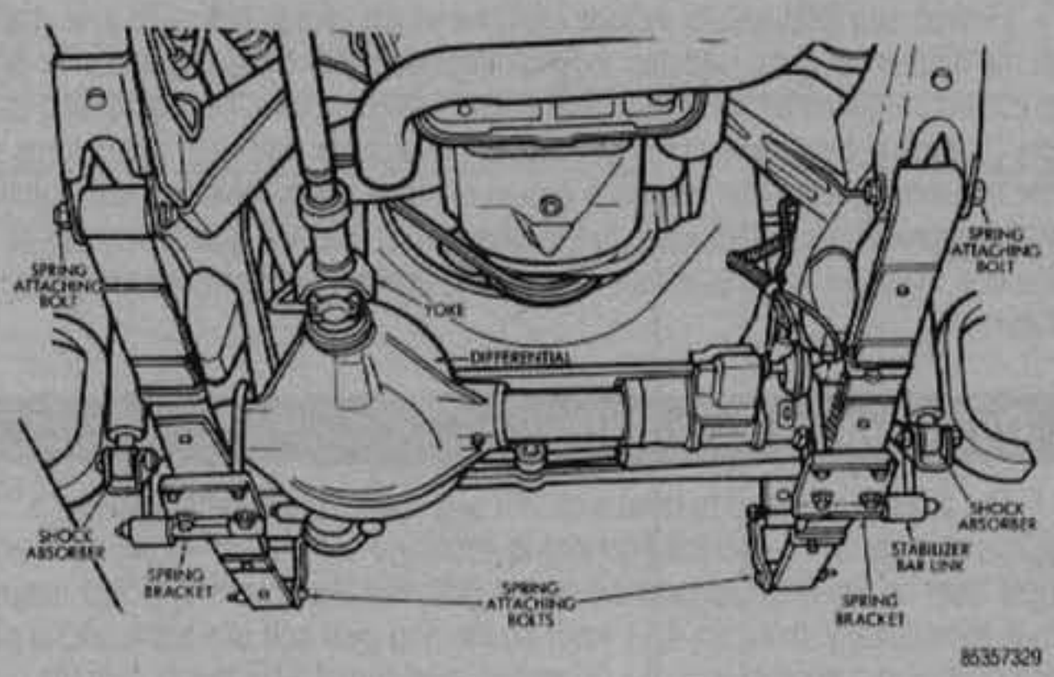

Fig. 68 Front axle unit removal/installation

Command-Trac® Shift Motor and Housing

REMOVAL & INSTALLATION

See Figure 69

1. Raise and support the front end on jackstands.
2. Place a drain pan under the shift motor.
3. Disconnect the vacuum harness at the motor.
4. Remove the attaching bolts and slowly lift off the motor and housing. Matchmark the shift fork and housing for installation reference.
5. Rotate the motor and remove the shift fork and motor snaprings.
6. Remove the motor from the housing and remove and discard the motor O-ring.
7. When installing the motor, always use a new O-ring. Install the motor in the housing and slide the shift fork on the shaft.
8. Position the housing and motor on the axle and add about 5 oz. of axle lubricant to the shift motor housing.
9. Engage the fork in the shift collar and install the attaching bolts. Torque the bolts to 96 inch lbs. (11 Nm).

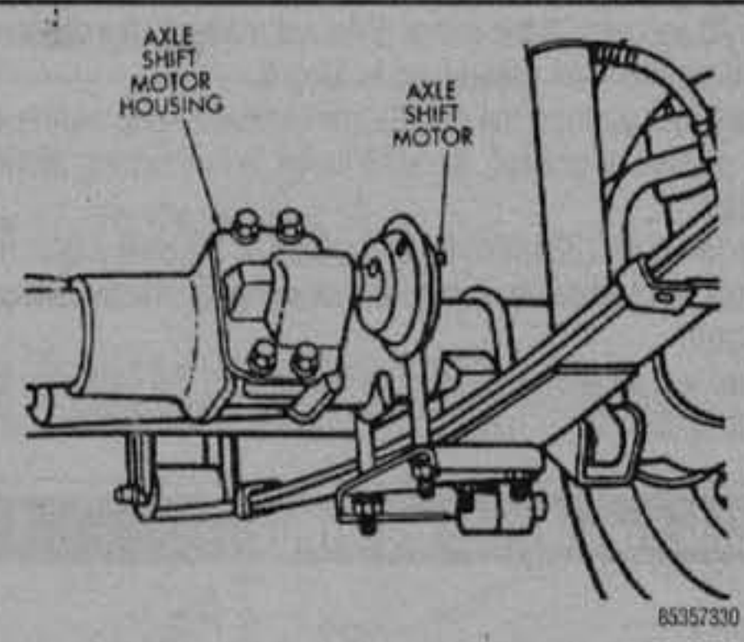

Fig. 69 Front axle shift motor and housing

FUNCTIONAL TEST

See Figures 70 and 71

1. Raise and support the vehicle safely.
2. Disconnect the vacuum harness and connect a hand vacuum pump to the front port. Apply 15 in. Hg (381mm Hg) of vacuum to the front port and rotate the right front wheel to fully disengage axle shafts.
3. The shift motor should maintain the vacuum applied to the front port for a minimum of 30 seconds. If the motor does not maintain the vacuum, replace it. If the motor does maintain vacuum go to Step 4.
4. Connect the vacuum pump to the rear port. Cap the port for the indicator lamp switch and apply 15 in. Hg (381mm Hg).

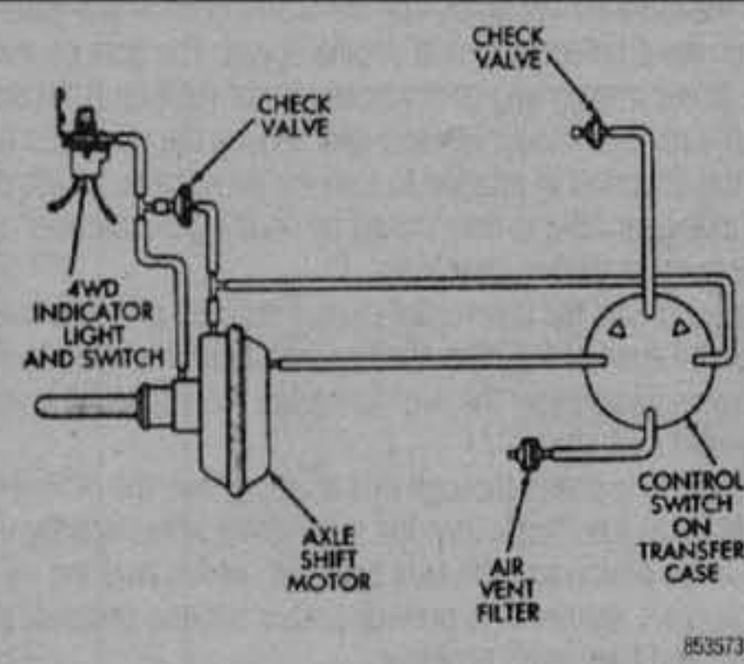

Fig. 70 Command-Trac® vacuum control system

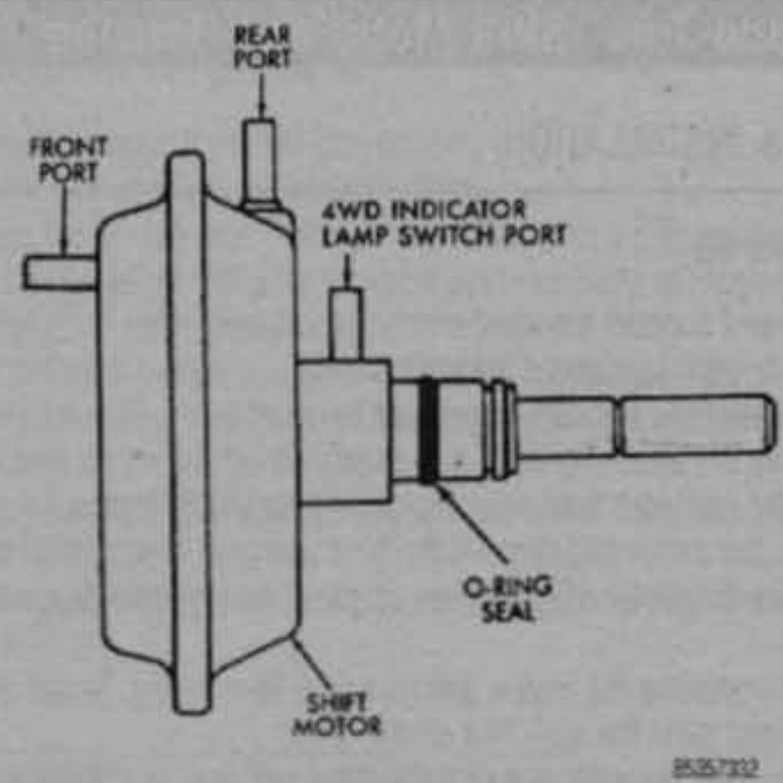

Fig. 71 Command-Trac® vacuum axle shift motor

5. The shift motor should maintain the vacuum applied to the rear port for a minimum of 30 seconds. If the motor does not maintain the vacuum, replace it. If the motor does maintain vacuum go to Step 6.

6. Remove the cap from the port for the indicator lamp switch and determine if vacuum is present. If present, the shift motor is functioning properly. If not, proceed to Step 7.

7. Apply 15 in. Hg (381mm Hg) of vacuum to the shift motor rear port. Rotate the right front wheel to engage the axle shafts. The axles must be completely engaged!

8. Determine if vacuum is present at the port for the indicator lamp switch. If present, the shift motor is functioning properly. If not, replace the shift motor.

Front Hub and Wheel Bearings

ADJUSTMENT

1987–90 Models

➡Sodium-based grease is not compatible with lithium-based grease. Read the package labels and be careful not to mix the two types. If there is any doubt as to the type of grease used, completely clean the old grease from the bearing and hub before replacing.

Before handling the bearings, there are a few things that you should remember to do and not to do.

Remember to DO the following:

- Remove all outside dirt from the housing before exposing the bearing.
- Treat a used bearing as gently as you would a new one.
- Work with clean tools in clean surroundings.
- Use clean, dry canvas gloves, or at least clean, dry hands.
- Clean solvents and flushing fluids are a must.
- Use clean paper when laying out the bearings to dry.
- Protect disassembled bearings from rust and dirt. Cover them up.
- Use clean rags to wipe bearings.
- Keep the bearings in oil-proof paper when they are to be stored or are not in use.
- Clean the inside of the housing before replacing the bearing.

Do NOT do the following:

- Don't work in dirty surroundings.
- Don't use dirty, chipped or damaged tools.
- Try not to work on wooden work benches or use wooden mallets.
- Don't handle bearings with dirty or moist hands.
- Do not use gasoline for cleaning; use a safe solvent.
- Do not spin-dry bearings with compressed air. They will be damaged.
- Do not spin dirty bearings.
- Avoid using cotton waste or dirty cloths to wipe bearings.
- Try not to scratch or nick bearing surfaces.
- Do not allow the bearing to come in contact with dirt or rust at any time.

1. Raise and support the front end on jackstands.
2. Remove the wheel.
3. Dismount the caliper and suspend it out of the way.
4. Remove the rotor.
5. Remove the hub nut pin, cap and nut.
6. Remove the hub.
7. The hub and bearings are usually replaced as a unit. The hub and bearing carrier may, however, be disassembled and the bearings replaced as a set. Once the hub and bearing carrier have been separated, the bearings should not be reused.
8. Pack the hub cavity and bearings with wheel bearing grease and install the hub on the axle shaft. If the carrier was separated from the hub, make sure you install a new carrier seal and inner bearing seal.
9. Install the hub washer and nut. Torque the nut to 175 ft. lbs. (237 Nm) and install the cap and new cotter pin.
10. Install the rotor, caliper and wheel.

REAR AXLE

General Information

The drive axle is a special type of transmission that reduces the speed of the drive from the engine and transmission, then divides the power to the wheels. Power enters the axle from the driveshaft via a companion flange, which is mounted on the drive pinion shaft. The drive pinion shaft and gear which carry the power into the differential turn at engine speed. The gear on the end of the pinion shaft drives a large ring gear whose axis of rotation is 90 degrees away from that of the pinion. The pinion and gear reduce the gear ratio of the axle, and change the direction of rotation to turn the axle shafts, which drive both wheels. The axle gear ratio is determined by dividing the number of pinion gear teeth into the number of ring gear teeth.

The ring gear drives the differential case. This case provides the two mounting points for the ends of a pinion shaft on which are mounted two pinion gears. The pinion gears drive the two side gears, one of which is located on the inner end of each axle shaft.

By driving the axle shafts through this arrangement, the differential allows the outer drive wheel to turn faster than the inner drive wheel in a turn.

The main drive pinion and the side bearings, which bear the weight of the differential case, are shimmed to provide proper bearing preload, and to position the pinion and ring gears properly.

➡Proper adjustment of the relationship between the ring and pinion gears is critical. It should be attempted only by those with extensive equipment and/or experience.

Limited-slip differentials include clutches which tend to link each axle shaft to the differential case. Clutches may be engaged either by spring action or by pressure produced by the torque on the axles during a turn. During turning on a dry pavement, the effects of the clutches are overcome, and each wheel turns at the required speed. When slippage occurs at either wheel, however, the clutches will transmit some of the power to the wheel which has the greater amount of traction. Because of the presence of clutches, limited-slip units require a special lubricant.

Determining Axle Ratio

The drive axle is said to have a certain axle ratio. This number (usually a whole number and a decimal fraction) is actually a comparison of the number of gear teeth on the ring gear and the pinion gear. For example, a 4.11 rear means that, theoretically, there are 4.11 teeth on the ring gear and one tooth on the pinion gear or, put another way, the driveshaft must turn 4.11 times to turn the wheels once. Actually, on a 4.11 rear, there might be 37 teeth on the ring gear and 9 teeth on the pinion gear. By dividing the number of teeth on the pinion

gear into the number of teeth on the ring gear, the numerical axle ratio (4.11) is obtained.

Another method of determining gear ratio is to jack up and support the vehicle so that both rear wheels are off the ground. Make a chalk mark on the rear wheel and the driveshaft. Put the transmission in neutral. Turn the rear wheel one complete turn and count the number of turns that the driveshaft makes. The number of turns that the driveshaft makes in one complete revolution of the rear wheel is an approximation of the rear axle ratio.

Pinion Oil Seal

REMOVAL & INSTALLATION

See Figures 72, 73, 74, 75 and 76

1. Raise and support the vehicle safely.
2. Remove the rear wheels and brake drums.
3. Matchmark and remove the driveshaft.
4. Rotate the pinion gear 3–4 times and measure the amount of torque necessary to rotate the pinion.
5. Measure and note the amount of torque necessary to to rotate the pinion gear with a torque wrench.

It is necessary to note the torque to properly adjust the pinion gear bearing preload torque after seal installation.

6. Use a suitable yoke holding tool and remove the pinion yoke nut and washer.
7. Using a suitable puller, remove the pinion yoke.
8. Matchmark the pinion yoke and gear for installation alignment reference.
9. Carefully remove the pinion gear seal.

To install:

10. Lubricate and install the new pinion seal using a seal driver.
11. Align and install the yoke, washer and pinion nut. Tighten the pinion nut only enough to remove the shaft end-play.

WARNING

Do not overtighten or loosen and retighten the nut.

12. Using a torque wrench, note the amount of torque necessary to rotate the pinion. The required pinion preload torque is equal to the measurement noted in the removal steps, plus 5 inch lbs. (0.5 Nm).
13. Tighten the pinion nut in small increments and continue measuring preload torque until correct.
14. Align and install the driveshaft using new strap bolts. Torque the bolts to 14 ft. lbs. (19 Nm).
15. Install the rear wheels and brake drums.

Axle Shaft, Bearing and Seal

REMOVAL & INSTALLATION

1987–89 Models

See Figures 77, 78, 79, 80 and 81

An arbor press is necessary for this procedure.

1. Jack up the vehicle and remove the wheels.
2. Remove the brake drum spring locknuts and remove the drum.

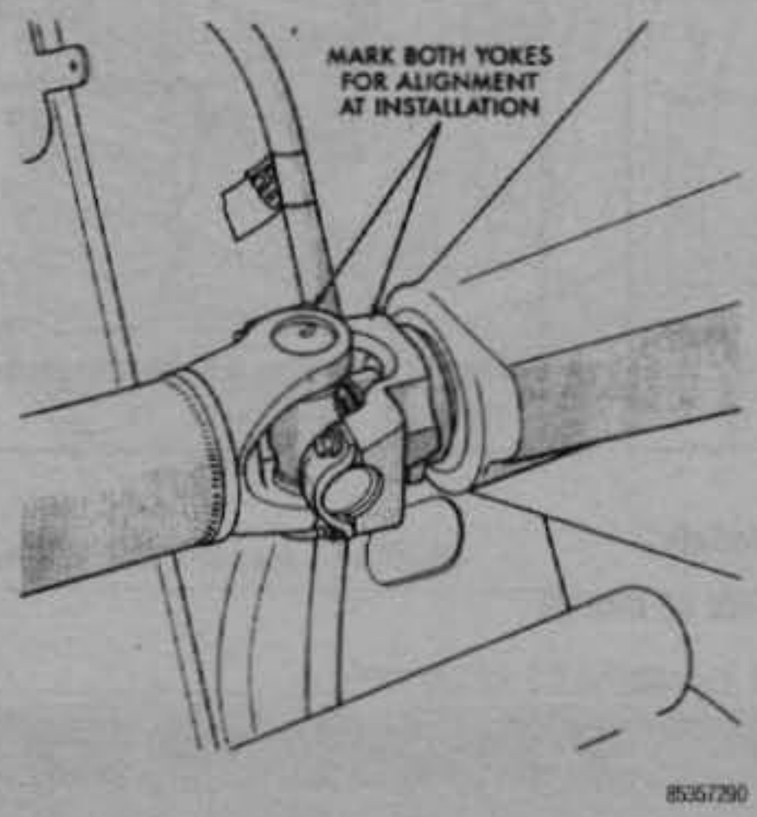

Fig. 72 Marking the yokes for alignment

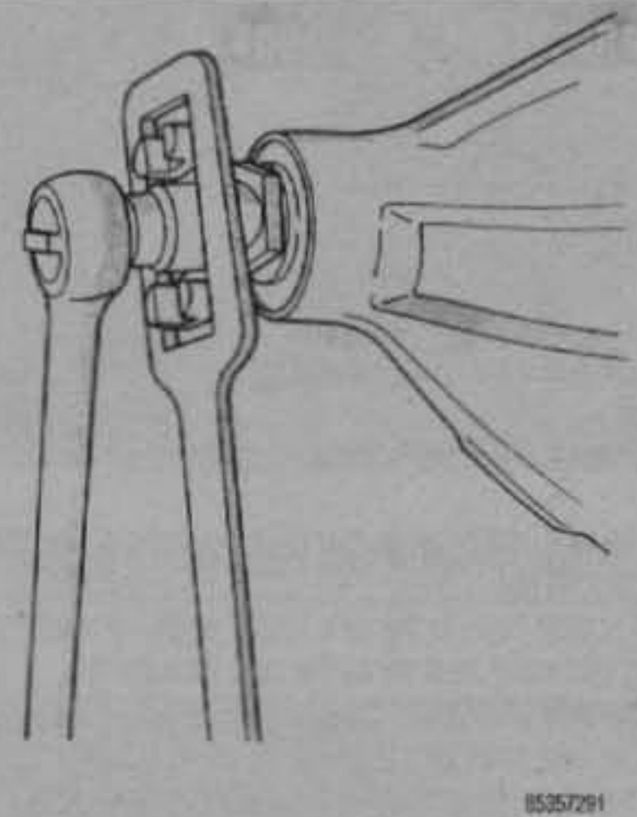

Fig. 73 Removing the pinion nut

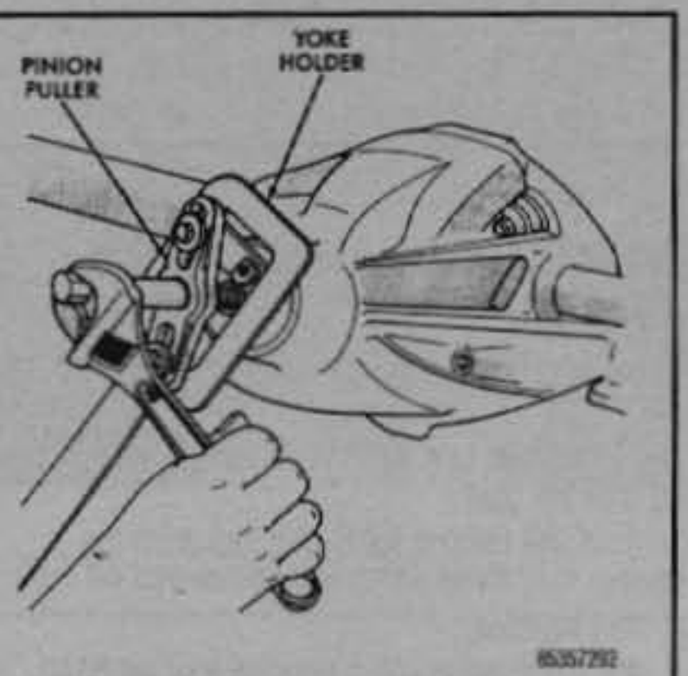

Fig. 74 Removing the pinion yoke

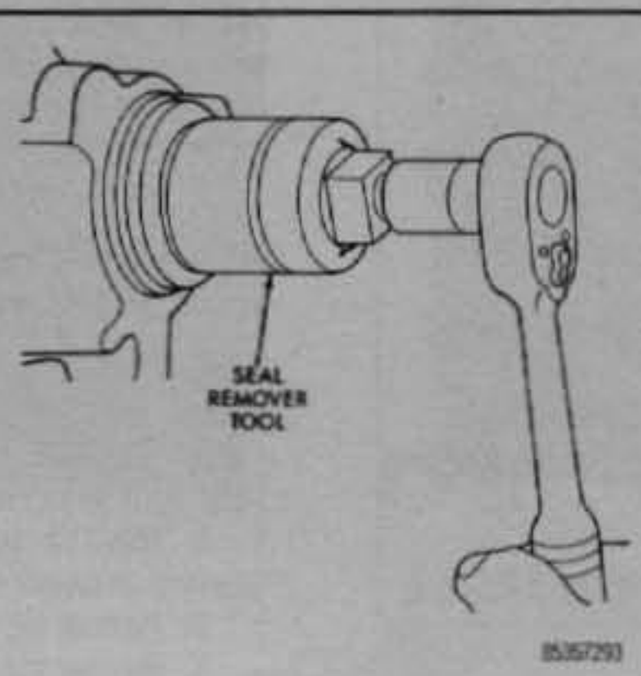

Fig. 75 Removing the pinion seal

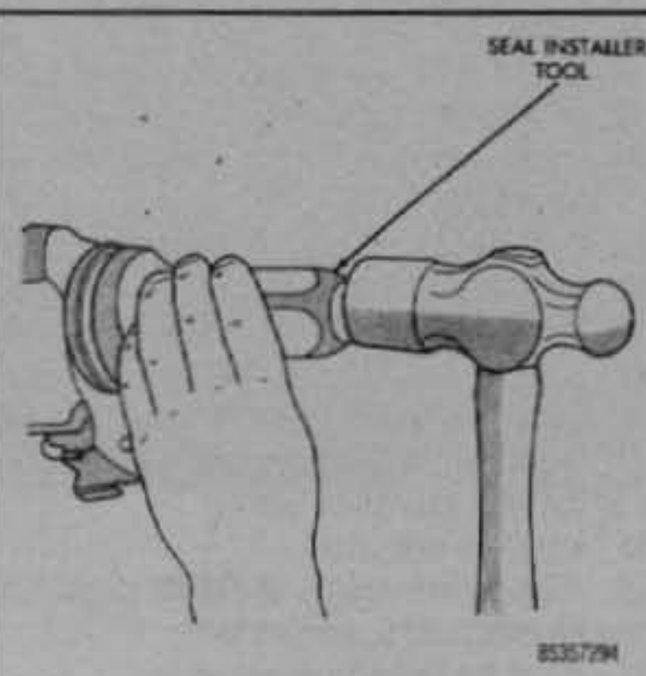

Fig. 76 Installing the pinion seal

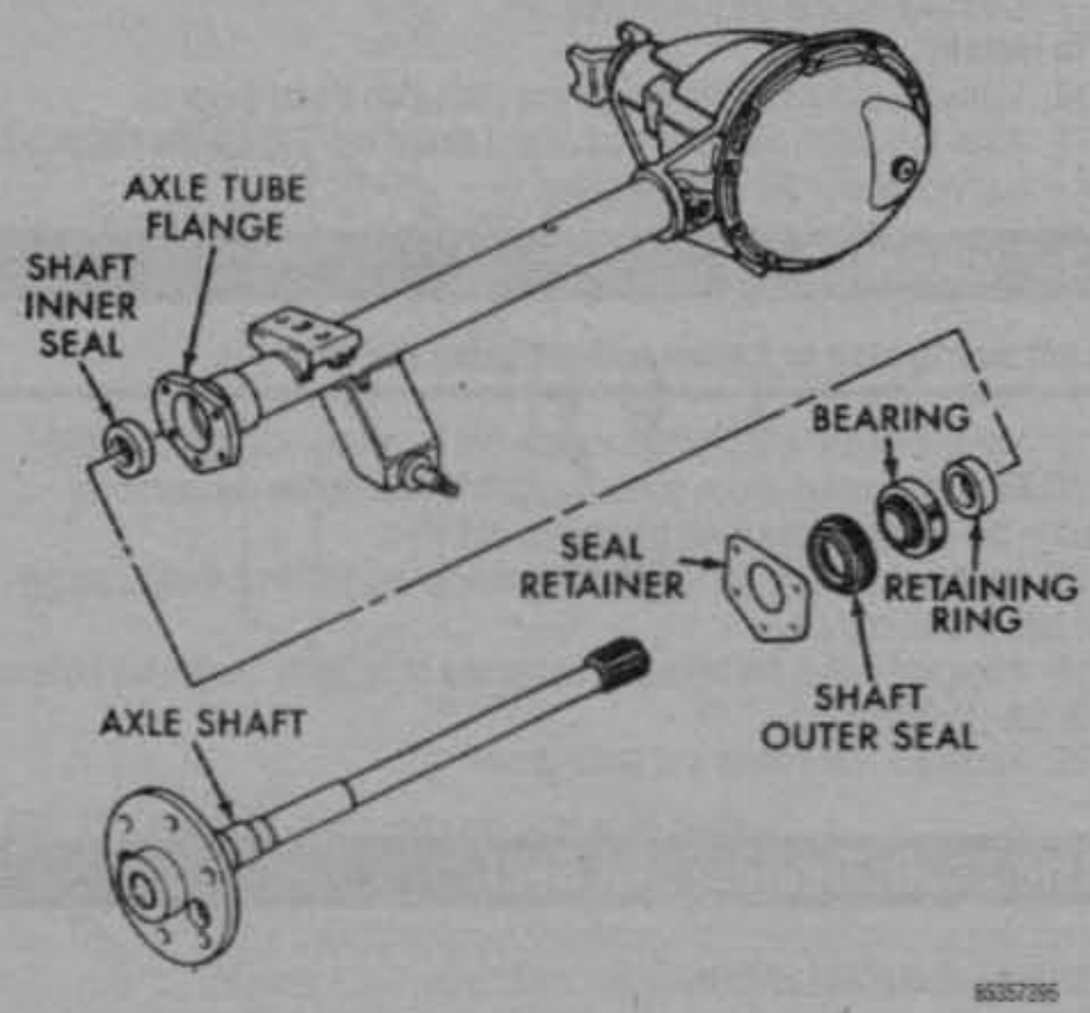

Fig. 77 Axle shaft components—1987–89

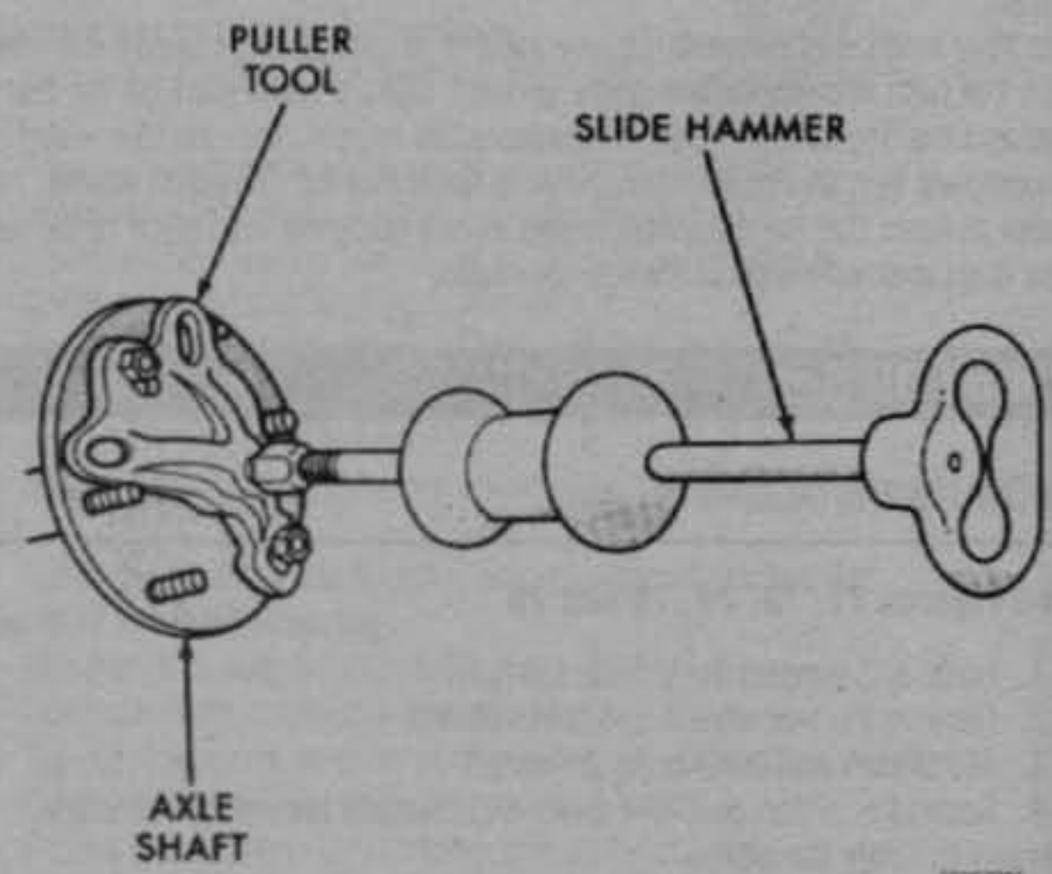

Fig. 78 Axle shaft removal—1987–89

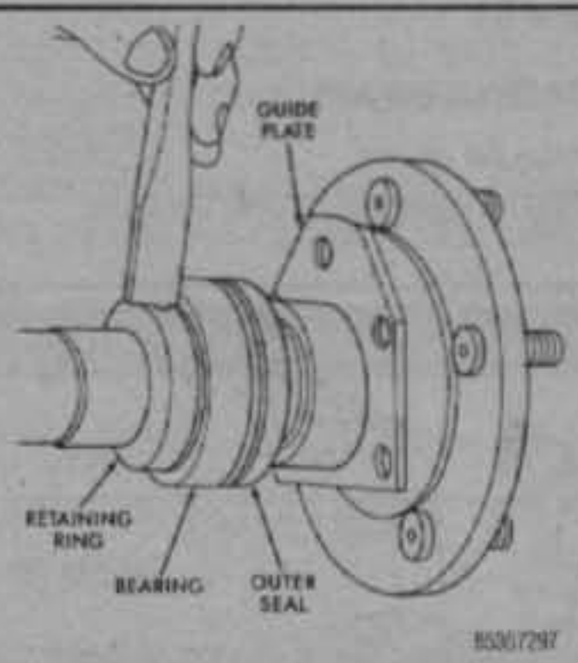

Fig. 79 Removing the bearing retaining ring—1987–89

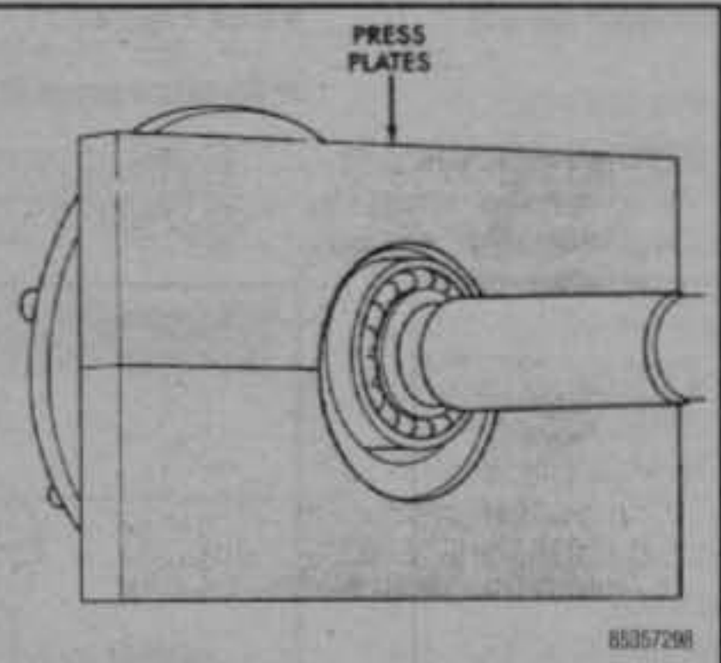

Fig. 80 Removing the shaft bearing—1987–89

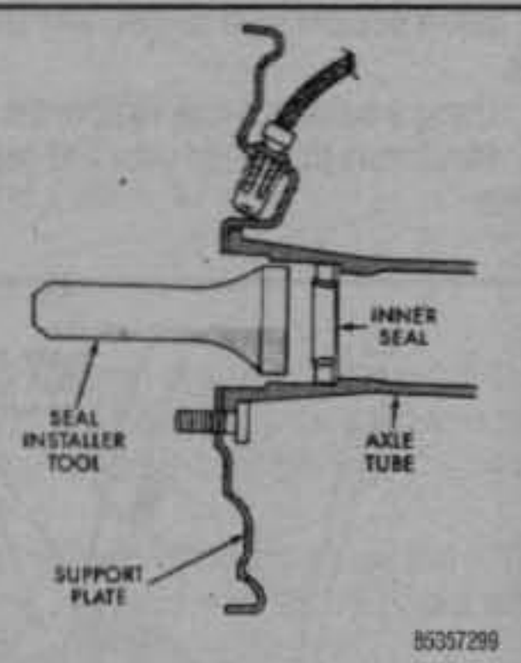

Fig. 81 Installing the shaft inner seal—1987–89

3. Remove the axle shaft flange cup plug by piercing the center with a sharp tool and prying it out.

4. Using the access hole in the axle shaft flange, remove the nuts which attach the backing plate and retainer to the axle tube flange.

5. Remove the axle shaft from the housing with an axle puller.

6. Position the axle shaft in a vise.

7. Remove the retaining ring by drilling a ¼ in. hole about ¾ of the way through the ring, then using a cold chisel over the hole, split the ring.

8. Remove the bearing with an arbor press, discard the seal and remove the retainer plate.

To install:

9. Clean the bearing and seal surfaces in the axle tube, then coat the the surfaces with wheel bearing grease.

10. Lubricate the lips of the of the axle shaft inner and outer seal lips with wheel bearing grease.

11. Install the inner seal in the axle tube, making sure the seal lip faces inward and is fully seated.

12. Install the seal retainer and outer seal on the shaft and make sure the seal lip faces the axle tube.

13. Pack the new bearing with bearing grease and install on the shaft.

14. Press the new bearing on the shaft, then press the new bearing retaining ring on the shaft against the bearing.

15. Install the axle shaft.

16. Align the seal retainer and brake support plate on the studs. Install and tighten the nuts to 32 ft. lbs. (43 Nm).

17. Install the brake drum and wheel.

1990–95 Models

♦ See Figures 82 thru 91

1. Raise and support the vehicle safely.

CAUTION

Brake linings may contain asbestos. Asbestos is a known cancer-causing agent. When working on brakes, remember that dust which accumulates on the parts and/or in the drum may contain asbestos. Always wear a protective face covering, such as a painter's mask, when working on brakes. NEVER blow dust from the brakes or drum! Always use solvents which were made for cleaning brake parts.

2. Remove the wheels and brake assemblies.

➡For vehicles equipped with ABS, please refer to Section 9 for the proper procedures concerning brake removal.

3. Loosen the differential housing cover, drain the lubricant and remove the cover.

4. Rotate the differential so the pinion gear mate shaft lock screw is accessible. Remove the screw along with the shaft.

5. Move the axle shafts inward and remove the C-clip lock from the recessed groove in the axle shaft.

6. Remove the axle shaft from the case.

7. Remove the axle shaft seal and bearing using removal tool set 6310.

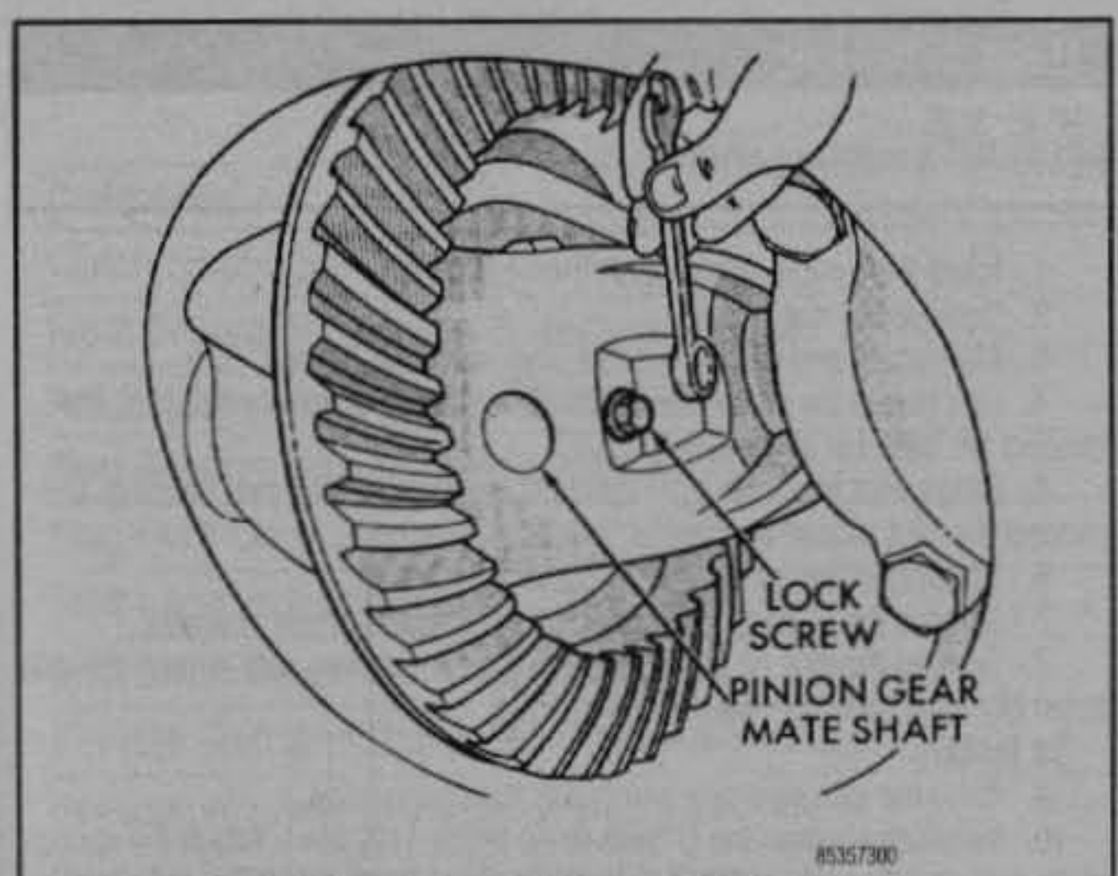

Fig. 82 Mate shaft lock screw location—1990–95

To install:

8. Wipe the bearing bore and axle shaft tube clean.
9. Install the bearing using tools C-4171 and 6436. Seat the bearing against the shoulder in the axle tube.
10. Install the replacement axle shaft seal with tool 6437 and C-4171. When the installation tool face contacts the axle tube, the seal is at the correct depth.
11. Lubricate the bore and the seal lip. Insert the shaft into the tube, engaging its splines with the differential.
12. Install the C-clips and seat the axles by forcing outward.
13. Insert the pinion gear mate shaft into the case, through the thrust washers and the pinion gears. Align the shaft hole with the lock screw hole. Install the lock screw and tighten to 14 ft. lbs. (19 Nm).
14. Apply an ⅛ in. (3mm) bead of RTV to the differential cover after cleaning the differential and cover with solvent.
15. Install the cover and tighten bolts to 35 ft. lbs. (47 Nm).
16. Install the brake assemblies and wheels.

➡For Trac-Loc® differentials, a special limited slip additive is needed.

17. Fill the differential, then lower and test the vehicle.
18. For vehicles equipped with Trac-Loc® differentials, drive the vehicle and make 10 to 12 slow, figure-eight turns to pump lubricant through the clutch discs.

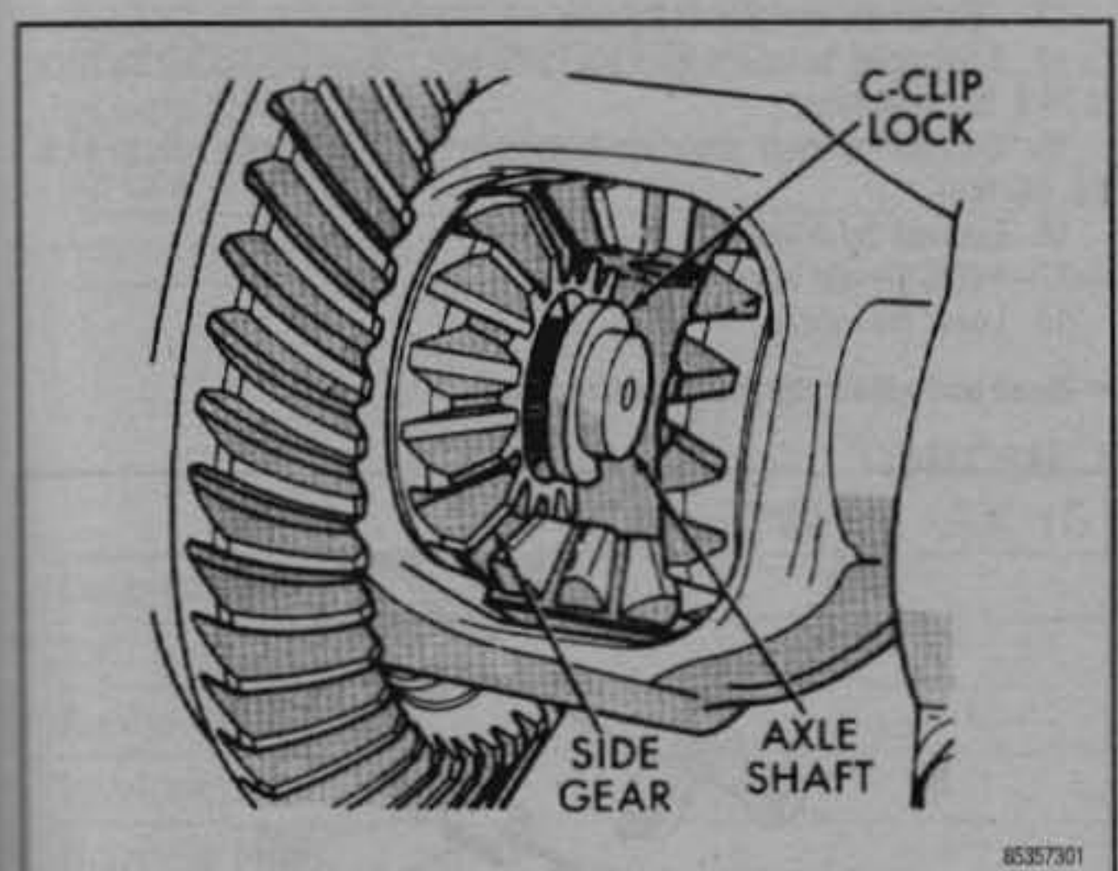

Fig. 83 Axle shaft C-clip lock—1990–95

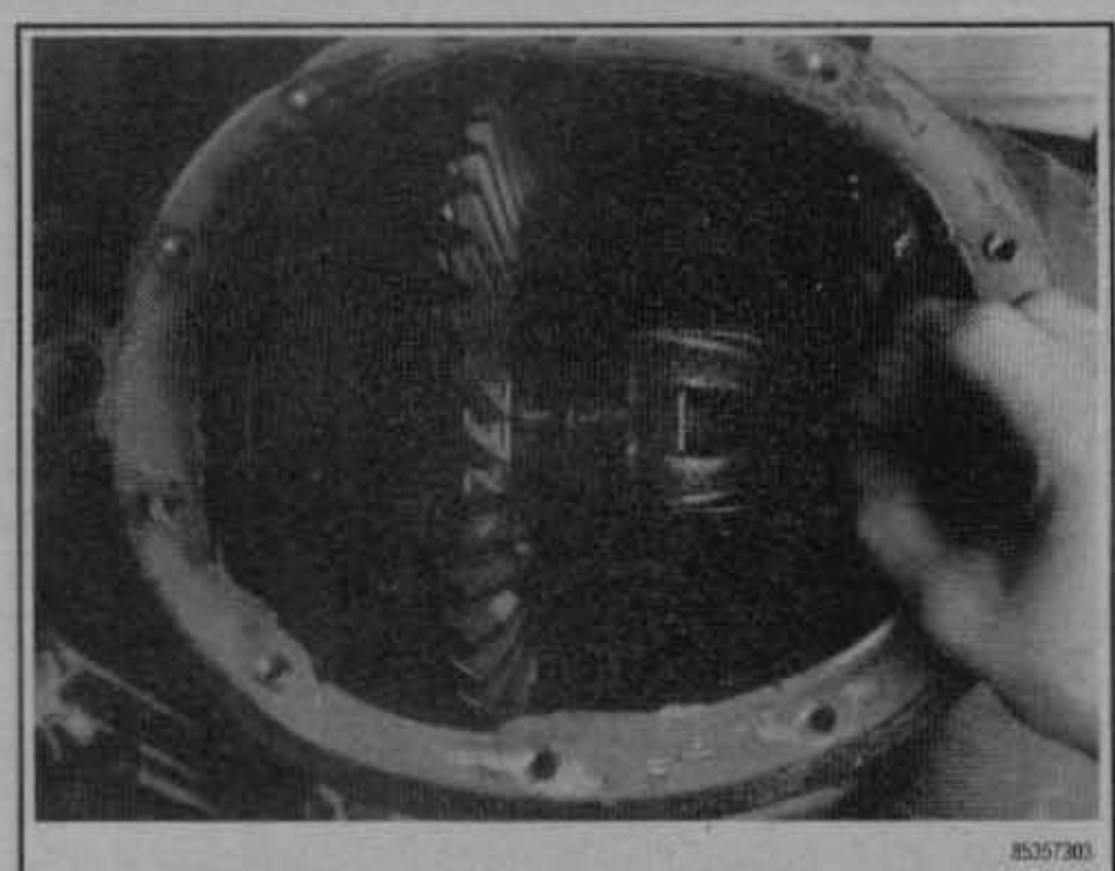

Fig. 85 Removing the mate shaft lock screw—1990–95

Fig. 84 Loosening the mate shaft lock screw—1990–95

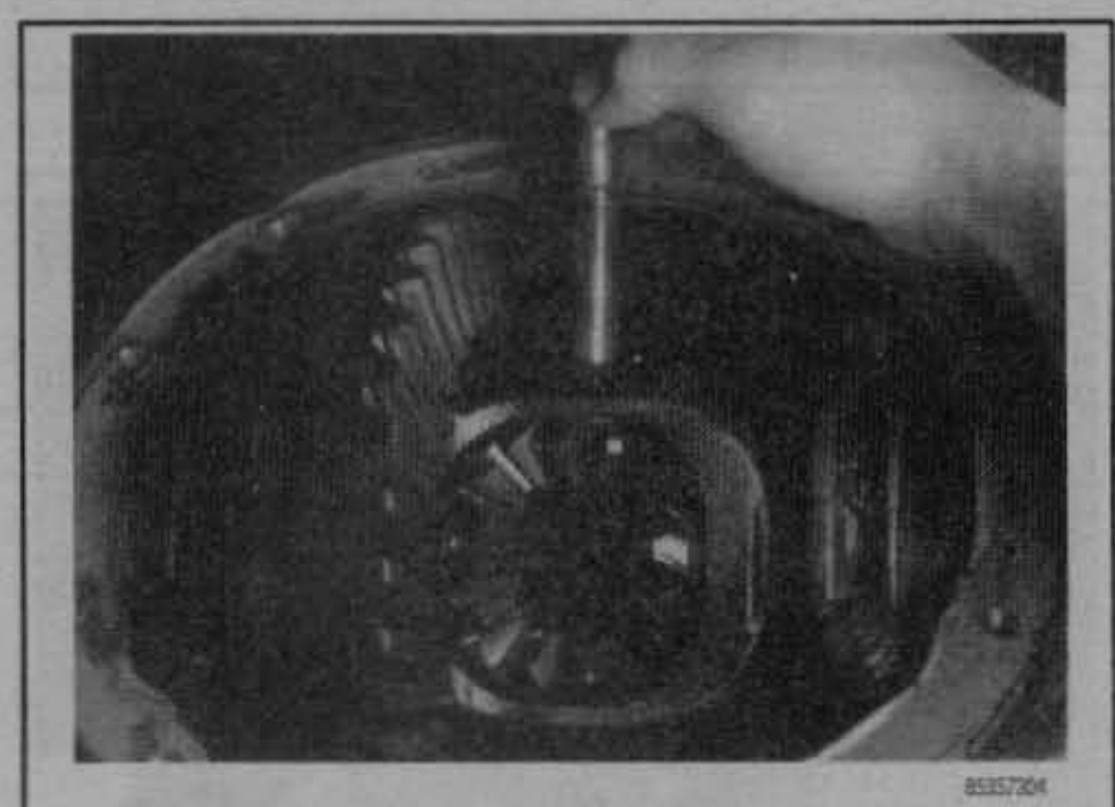

Fig. 86 Removing the mate shaft—1990–95

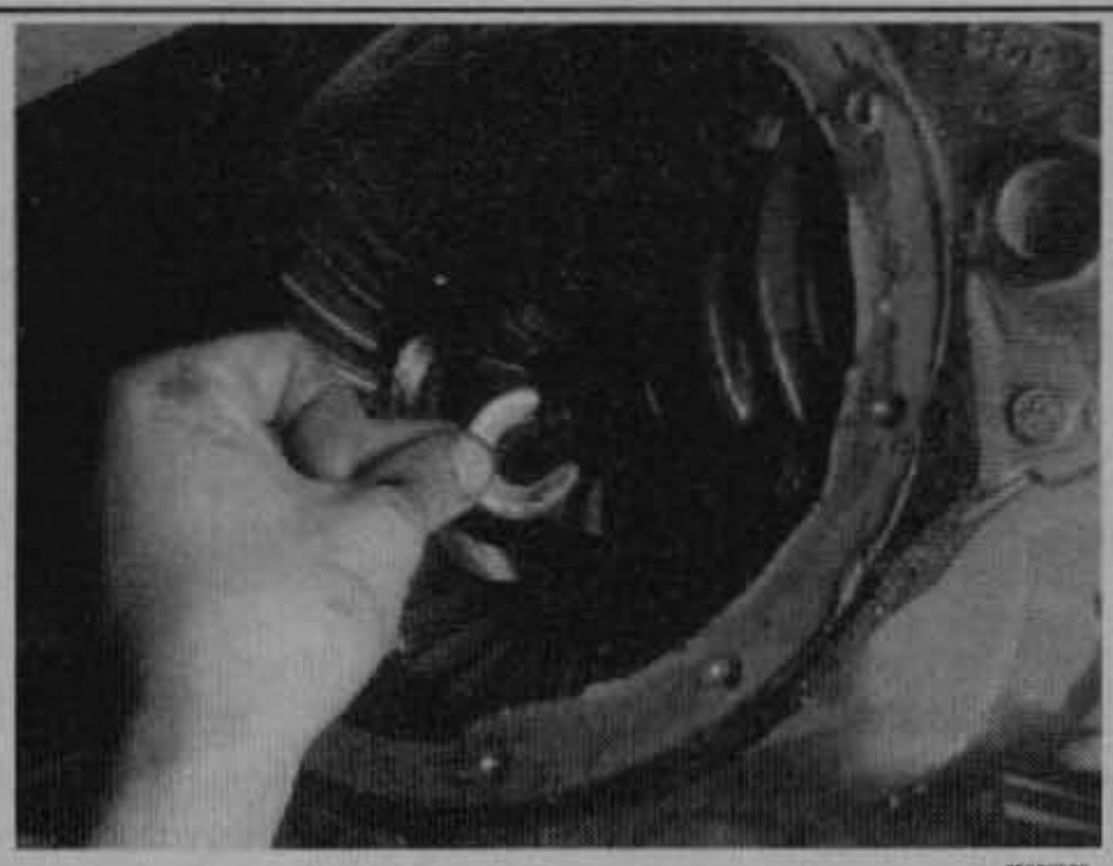

Fig. 87 Removing the axle shaft C-clip lock—1990–95

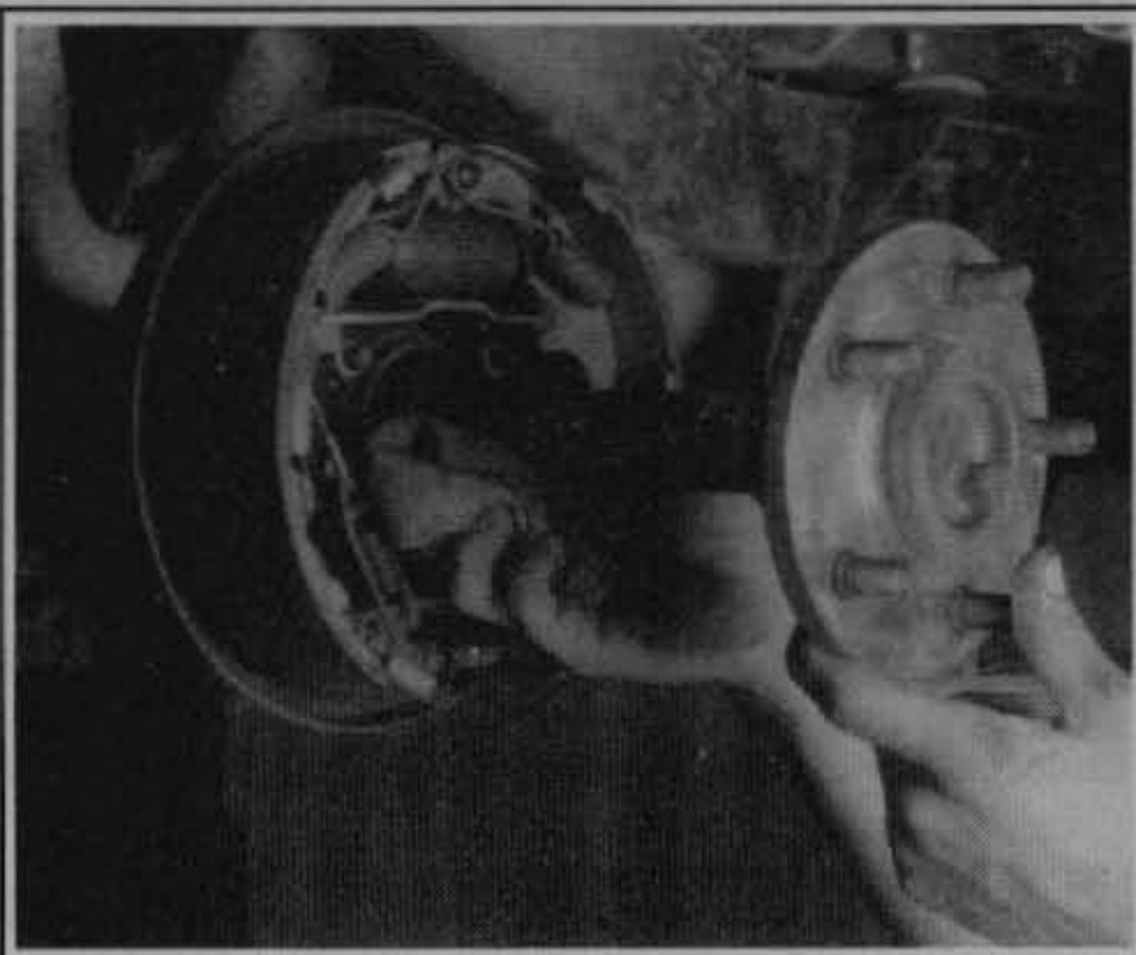

Fig. 88 Removing the axle shaft—1990–95

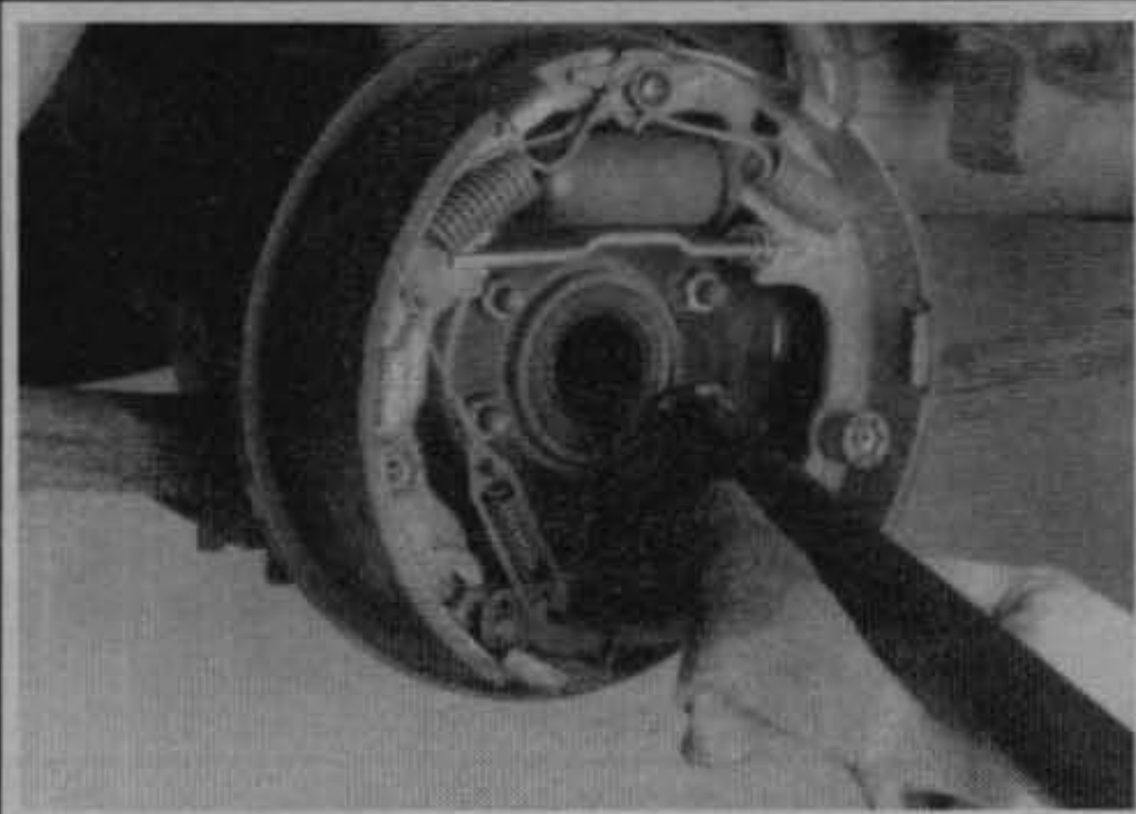

Fig. 89 Removing the axle shaft—1990–95

Rear Axle Unit

REMOVAL & INSTALLATION

1. Raise the vehicle and support it on jackstands.
2. Remove the rear wheels.
3. Matchmark and disconnect the driveshaft from the rear yoke.
4. Disconnect the shock absorbers from the axle tubes. If equipped, disconnect the track bar at the axle bracket.
5. Disconnect the brake hose from the tee fitting on the axle housing. Disconnect the vent tube at the axle.
6. Disconnect the parking brake cable at the frame.
7. Remove the U-bolts. Disconnect the spring at the rear shackle.
8. Support the axle on a jack, remove the spring clips, and remove the axle assembly from under the vehicle.

To install:

9. Raise the axle on a jack and install the spring clips.
10. Install and tighten the U-bolts to 90 ft. lbs. (122 Nm). Attach the spring at the rear shackle and tighten the shackle bolts to 95 ft. lbs. (129 Nm). Torque the spring-to-frame bracket bolts to 105 ft. lbs. (142 Nm).
11. Connect the parking brake cable at the frame mounting.
12. Connect the brake hose at the axle housing tee fitting.
13. Connect the vent tube at the axle.
14. If equipped, fasten the track bar to the axle bracket and tighten the bolts to 74 ft. lbs. (100 Nm).
15. Connect the shock absorbers to the axle tubes. Torque the nuts to 44 ft. lbs. (60 Nm).
16. Connect the driveshaft.
17. Install the rear wheels.
18. Lower the vehicle.

➡Bleed and adjust the brakes accordingly.

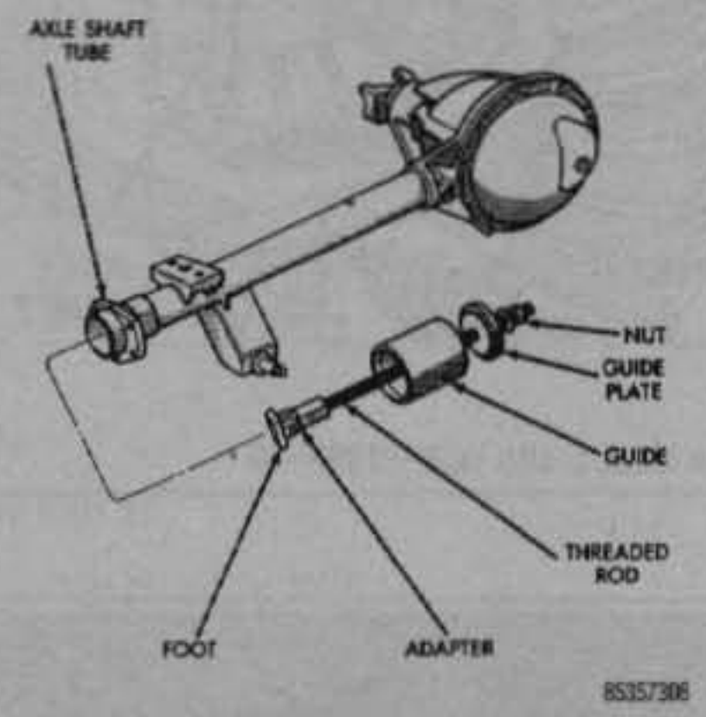

Fig. 90 Axle shaft bearing removal tool—1990–95

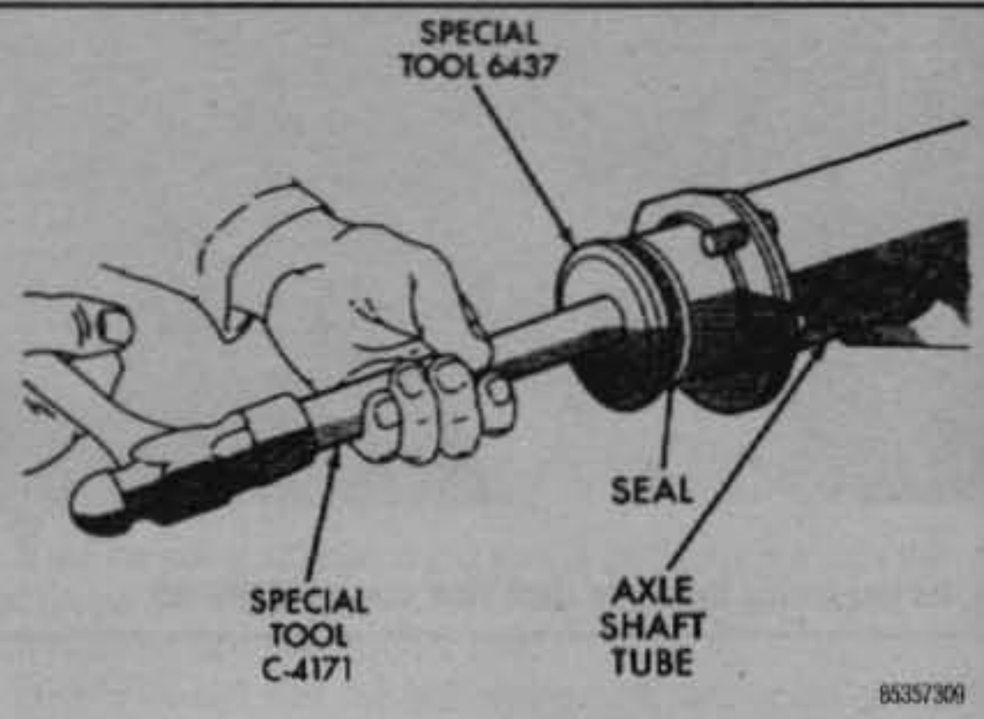

Fig. 91 Axle shaft seal installation—1990–95

TORQUE SPECIFICATIONS
AX 4/5 Transmission

Component	U.S.	Metric
Clutch Housing-to-Transmission Case	27 ft. lbs.	37 Nm
Front Bearing Retainer-to-Transmission Case	13 ft. lbs.	18 Nm
Adapter Housing-to-Transmission Case	27 ft. lbs.	37 Nm
Rear Bearing Retainer-to-Intermediate Plate	13 ft. lbs.	18 Nm
Plug-Shift Lever Shaft-to-Adapter Housing	13 ft. lbs.	18 Nm
Shift Lever Housing-to-Shift Lever Shaft	27 ft. lbs.	37 Nm
Shift Lever Retainer-to-Adapter Housing	13 ft. lbs.	18 Nm
Reverse Shift Arm Bracket-to-Intermediate Plate	13 ft. lbs.	18 Nm
Reverse Idle Gear Shaft-to-Intermediate Plate	13 ft. lbs.	18 Nm
Reverse Restrict Pin-to-Adapter Housing	27 ft. lbs.	37 Nm
Plug-Lock Ball Spring	14 ft. lbs.	19 Nm
Counter Gear Locknut	90 ft. lbs.	122 Nm
Filler/Drain Plug—Transmission Case	27 ft. lbs.	37 Nm
Back-Up Lamp Switch	27 ft. lbs.	37 Nm
Top Gear Switch	27 ft. lbs.	37 Nm
Plug—Oil Lever Sensor	13 ft. lbs.	18 Nm

85357C02

TORQUE SPECIFICATIONS
AX 15 Transmission

Component	U.S.	Metric
Shift Tower Bolts	13 ft. lbs.	18 Nm
Access Plugs	14 ft. lbs.	19 Nm
Interlock/Detent Ball Plugs	14 ft. lbs.	19 Nm
Drain /Fill Plugs	27 ft. lbs.	37 Nm
Gear Case-to-Adapter Housing Bolts	27 ft. lbs.	37 Nm
Back-Up Light Switch	27 ft. lbs.	37 Nm
Front Bearing Retainer Bolts	12 ft. lbs.	17 Nm
Rear Bearing Retainer Bolts	13 ft. lbs.	18 Nm
Shift Fork Set Screws	15 ft. lbs.	20 Nm
Reverse Shift Arm Bracket Bolts	13 ft. lbs.	18 Nm
Shift Arm Set Screw	28 ft. lbs.	38 Nm
Restrictor Pins	14 ft. lbs.	19 Nm

85357C03

TORQUE SPECIFICATIONS
999 Transmission

Component	U.S.	Metric
Cooler Line Fitting	160 inch lbs.	18 Nm
Cooler Line Nut	150 inch lbs.	17 Nm
Converter Drive Plate-to-Crankshaft Bolts	105 ft. lbs.	142 Nm
Converter Drive Plate-to-Torque Converter Bolts	26 ft. lbs.	35 Nm
Adapter Housing-to-Transmission Case Bolt	24 ft. lbs.	33 Nm
Governor Body Bolt	100 inch lbs.	11 Nm
Front Band Adjusting Screw Locknut	35 ft. lbs.	47 Nm
Kickdown Lever Shaft Plug	150 inch lbs.	17 Nm
Rear Band Adjusting Screw Locknut	35 ft. lbs.	47 Nm
Neutral Switch	24 ft. lbs.	33 Nm
Oil Filler Tube Bracket Bolt	150 inch lbs.	17 Nm
Oil Pan Bolt	150 inch lbs.	17 Nm
Oil Pump Housing-to-Transmission Case Bolt	175 inch lbs.	20 Nm
Output Shaft Support Bolt	150 inch lbs.	17 Nm
Overrunning Clutch Cam Setscrew	40 inch lbs.	4 Nm
Pressure Test Port Plug	110 inch lbs.	12 Nm
Reaction Shaft Support-to-Oil Pump Bolt	160 inch lbs.	18 Nm
Transmission-to-Engine Bolt	160 inch lbs.	38 Nm
Valve Body Screw	35 inch lbs.	4 Nm
Valve Body-to-Transmission Case Screw	100 inch lbs.	11 Nm

85357C04

TORQUE SPECIFICATIONS
Rear Axle

Component	U.S.	Metric
Knuckle Ball Stud Nut	75 ft. lbs.	102 Nm
Axle Hub Shaft Nut	175 ft. lbs.	237 Nm
Differential Bearing Cap Bolt	57 ft. lbs.	77 Nm
Hub Assembly To Knuckle Bolt	75 ft. lbs.	101 Nm
Knuckle Slotted Nut	100 ft. lbs.	136 Nm
Pinion Yoke Nut	200 ft. lbs.	271 Nm
Ring Gear Case Bolt	55 ft. lbs.	75 Nm

85357C07

TORQUE SPECIFICATIONS
30RH/32RH Transmission

Component	U.S.	Metric
Cooler Line Fittings	13 ft. lbs.	18 Nm
Converter Bolts		
9.5 in., 3-lug converter	40 ft. lbs.	54 Nm
9.5 in., 4-lug converter	55 ft. lbs.	74 Nm
10.0 in., 4-lug converter	55 ft. lbs.	74 Nm
Crossmember Bolts/Nuts	50 ft. lbs.	68 Nm
Driveplate Bolts	55 ft. lbs.	75 Nm
Extension/Adapter Housing Bolts	32 ft. lbs.	43 Nm
Front Band Pivot Pin Access Plug	13 ft. lbs.	17 Nm
Front Band Adjusting Screw Locknut	25 ft. lbs.	34 Nm
Governor Body-to-Park Gear Bolts	8 ft. lbs.	11 Nm
Converter Clutch Park/Module Screws	35 inch lbs.	4 Nm
Neutral Position Switch	25 ft. lbs.	34 Nm
Oil Filter Screws	35 inch lbs.	4 Nm
Oil Pan Bolts	13 ft. lbs.	17 Nm
Oil Pump Bolts	15 ft. lbs.	20 Nm
Rear Support Bolts	150 inch lbs.	17 Nm
Pressure Test Port Plugs	10 ft. lbs.	14 Nm
Propeller Shaft Clamp Bolts	170 inch lbs.	19 Nm
Reaction Shaft Support Bolts	15 ft. lbs.	10 Nm
Rear Band Adjusting Screw Locknut	30 ft. lbs.	41 Nm
Rear Mount Bolts/Nuts	50 ft. lbs.	68 Nm
Solenoid-to-Transfer Plate Screw	35 inch lbs.	4 Nm
Speedometer Adapter Clamp Bolt	8 ft. lbs.	11 Nm
Valve Body Screws	35 inch lbs.	4 Nm
Valve Body-to-Case Bolts	100 inch lbs.	12 Nm

85357C05

TORQUE SPECIFICATIONS
BA 10/5 Transmission

Component	U.S.	Metric
Front Case Mounting Studs	8 ft. lbs.	10 Nm
Front Case Bolts		
8 mm (5/16 in.)	15 ft. lbs.	20 Nm
7 mm (1/4 in.)	11 ft. lbs.	15 Nm
Intermediate Case-to-Front Case Bolts	13 ft. lbs.	18 Nm
Rear Case-to-Intermediate Case Bolts/Nuts	13 ft. lbs.	18 Nm
Bearing Retainer Studs	16 ft. lbs.	22 Nm
Reverse Gear Nut	41 ft. lbs.	55 Nm
Detent Plugs	10 ft. lbs.	13 Nm
Drain and Fill Plugs	20 ft. lbs.	28 Nm
Backup Light Switch	20 ft. lbs.	28 Nm
Front Case Mounting Stud-to-Clutch Housing Nuts	26 ft. lbs.	35 Nm

85357C01

TORQUE SPECIFICATIONS
231 Transfer Case

Component	U.S.	Metric
Oil Pump Screws	14 inch lbs.	1.6 Nm
Yoke Nut	110 ft. lbs.	149 Nm
Vacuum Switch	20 ft. lbs.	27 Nm
Range Lever Nut	22 ft. lbs.	30 Nm
Front Case-to-Rear Case Bolts	30 ft. lbs.	41 Nm
Rear Retainer Bolts	18 ft. lbs.	24 Nm
Extension Housing Bolts	30 ft. lbs.	41 Nm
Drain/Fill Plugs	35 ft. lbs.	47 Nm
Detent Plug	15 ft. lbs.	20 Nm
Front Bearing Retainer Bolts	16 ft. lbs.	21 Nm

85357C06

FRONT SUSPENSION 8-2
SPRINGS 8-2
REMOVAL AND INSTALLATION 8-2
SHOCK ABSORBERS 8-2
REMOVAL AND INSTALLATION 8-2
STABILIZER BAR 8-3
REMOVAL & INSTALLATION 8-3
TRACK BAR 8-3
REMOVAL AND INSTALLATION 8-3
STEERING KNUCKLE 8-3
REMOVAL AND INSTALLATION 8-3
UPPER BALL JOINT 8-5
REMOVAL AND INSTALLATION 8-5
LOWER BALL JOINT 8-5
REMOVAL AND INSTALLATION 8-5
WHEEL ALIGNMENT 8-5
CASTER 8-5
CAMBER 8-5
TOE 8-5
REAR SUSPENSION 8-6
SPRINGS 8-6
REMOVAL AND INSTALLATION 8-6
SHOCK ABSORBERS 8-7
REMOVAL AND INSTALLATION 8-7
TRACK BAR 8-7
REMOVAL AND INSTALLATION 8-7
STEERING 8-8
STEERING WHEEL 8-8
REMOVAL AND INSTALLATION 8-8
TURN SIGNAL SWITCH 8-9
REMOVAL AND INSTALLATION 8-9
IGNITION SWITCH 8-10
REMOVAL & INSTALLATION 8-10
IGNITION LOCK CYLINDER 8-10
REMOVAL AND INSTALLATION 8-10
MANUAL STEERING GEAR 8-11
REMOVAL AND INSTALLATION 8-11
ADJUSTMENT 8-11
POWER STEERING GEAR 8-12
REMOVAL AND INSTALLATION 8-12
ADJUSTMENT 8-12
POWER STEERING PUMP 8-13
REMOVAL AND INSTALLATION 8-13
THE ROD END 8-14
REMOVAL AND INSTALLATION 8-14
CENTER LINK/CONNECTING ROD/DRAG LINK 8-14
STEERING DAMPER 8-15
REMOVAL AND INSTALLATION 8-15
PITMAN ARM 8-15
REMOVAL AND INSTALLATION 8-15
SPECIFICATIONS CHARTS
WHEEL ALIGNMENT 8-6
TORQUE SPECIFICATIONS 8-15
TROUBLESHOOTING CHART
POWER STEERING PUMP 8-16

8

SUSPENSION AND STEERING

FRONT SUSPENSION 8-2
REAR SUSPENSION 8-6
STEERING 8-8

FRONT SUSPENSION

See Figure 1

All springs should be examined periodically for broken or shifted leaves, loose or missing clips, improper angle of the spring shackles, and incorrect positioning of the springs on the saddles. Springs with shifted leaves do not retain their normal strength. Missing clips may permit the spring leaves to fan out or break on rebound. Broken leaves may make the vehicle hard to handle or permit the axle to shift out of line. Weakened springs may break causing difficulty in steering. Spring attaching clips or bolts must be tight. It is suggested that they be checked at each vehicle inspection.

Springs

REMOVAL & INSTALLATION

See Figure 2

1. Raise and support the vehicle safely.
2. Support the front axle so the weight is relieved.
3. Remove the stabilizer bar link attaching nut.
4. Remove the nuts, U-bolts and bracket from the axle.
5. Remove the nut and bolt attaching the spring front eye to the shackle.
6. Remove the spring from the vehicle.

To install:

7. Position the spring front eye in the shackle.
8. Position the rear eye in the hanger bracket.
9. Install the spring bracket, U-bolts and nuts. Torque the nuts to 90 ft. lbs. (122 Nm).
10. Attach the stabilizer bar links.
11. Remove the axle support.
12. Lower the vehicle.
13. Torque the front shackle plate nut to 100 ft. lbs. (135 Nm).
14. Torque the rear eye bracket nut to 105 ft. lbs. (142 Nm).

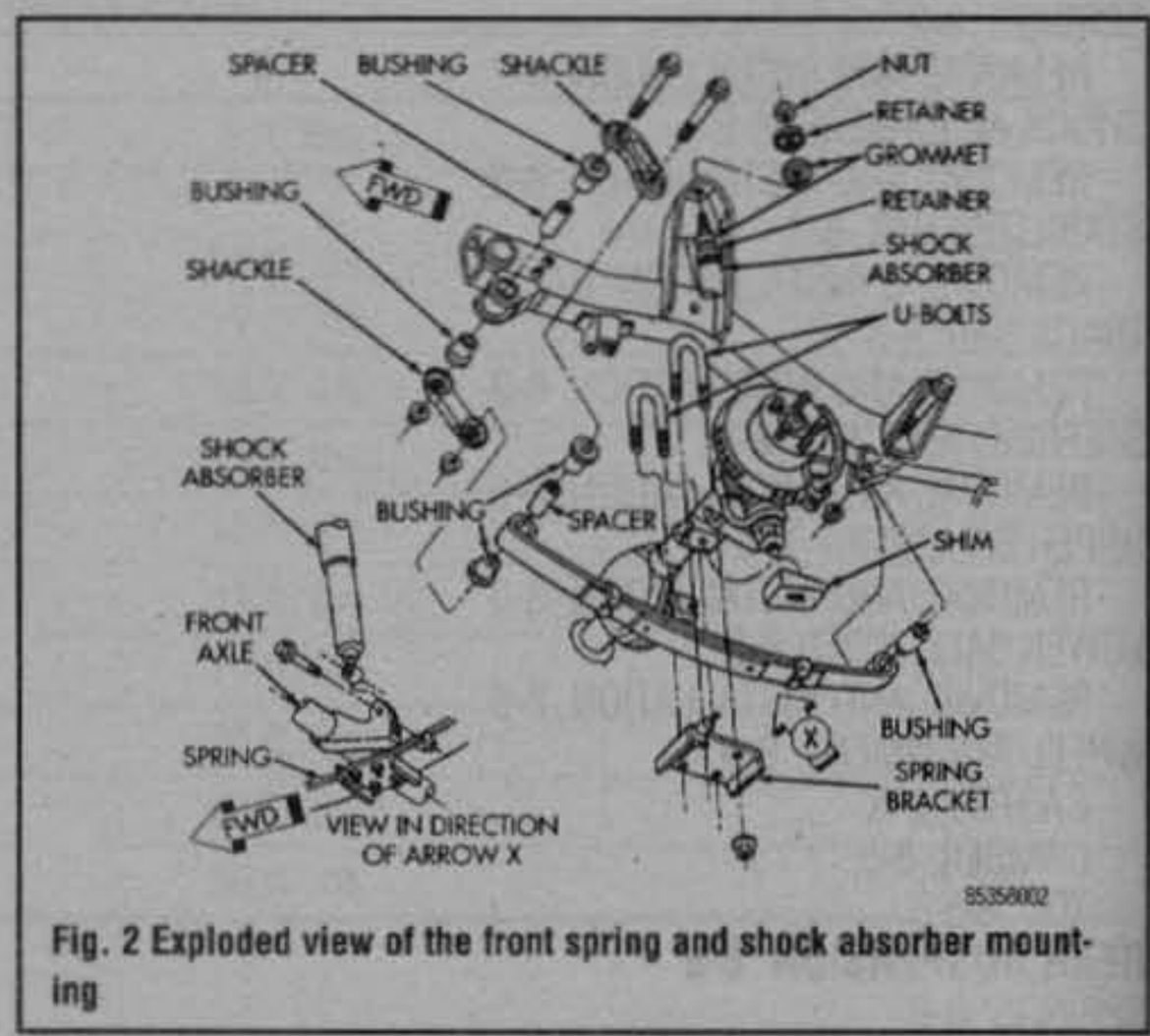

Fig. 2 Exploded view of the front spring and shock absorber mounting

Shock Absorbers

REMOVAL & INSTALLATION

See Figures 2, 3, 4 and 5

1. Hold the upper stem from turning using a wrench or vise grip pliers, then remove the upper end nut, washer and grommet from the shock absorber stem.
2. Raise and support the front end on jackstands.

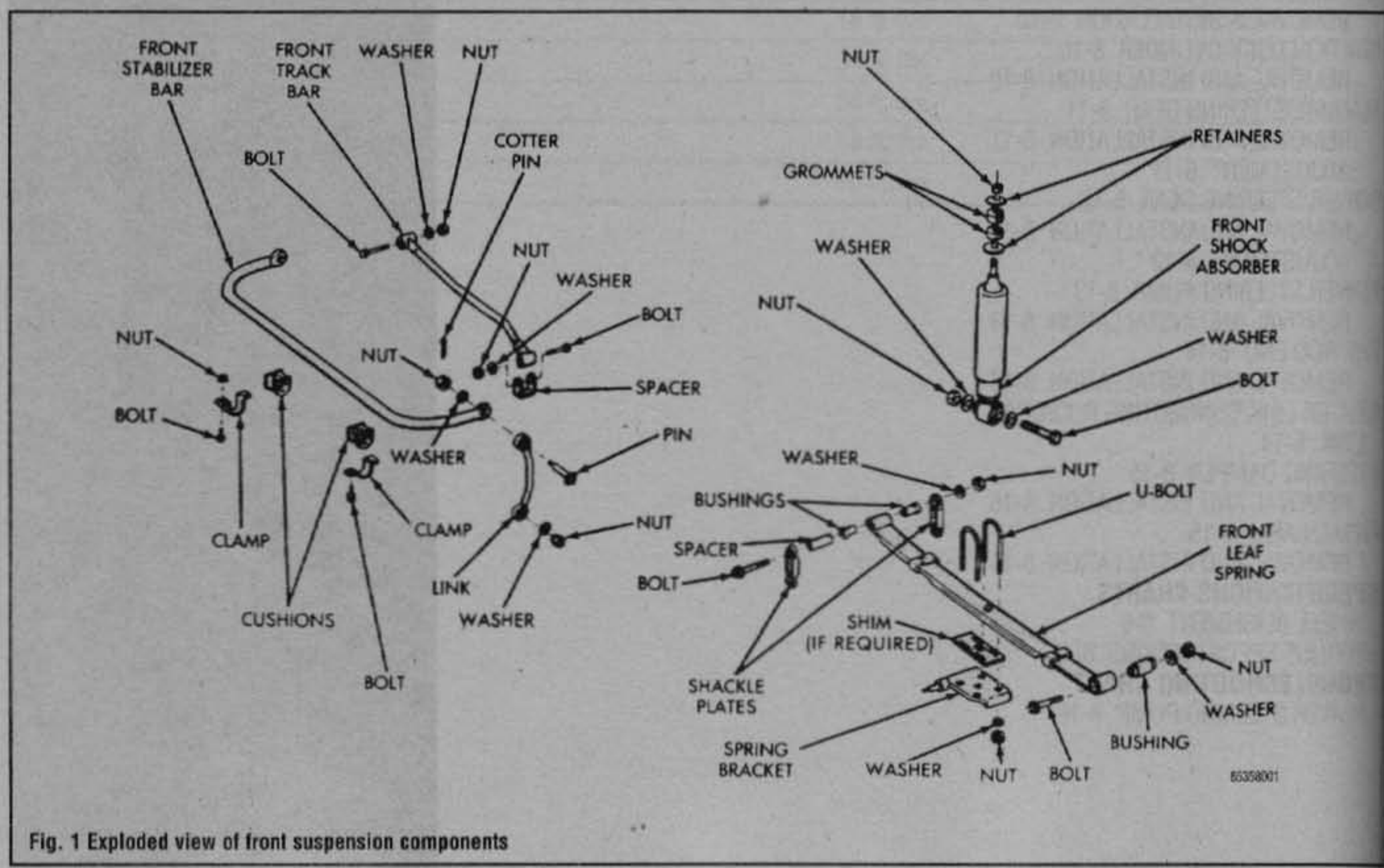

Fig. 1 Exploded view of front suspension components

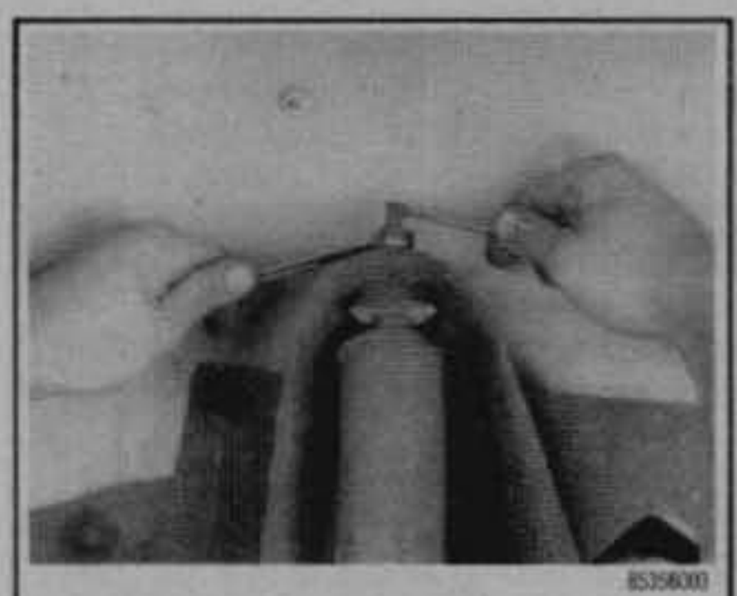

Fig. 3 Use a wrench to hold the upper stem while removing the nut, washer and grommet

Fig. 4 If necessary, vise grip pliers may also be used to keep the shock absorber upper stem from turning

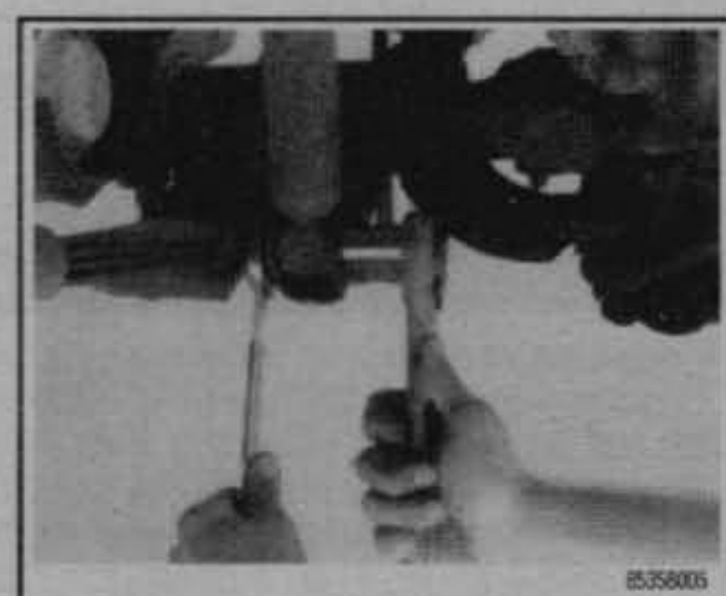

Fig. 5 A back-up wrench should also be used when removing the lower nut, washers and bolt from the shock absorber

3. Unbolt the lower end, then remove the shock absorber.
4. Remove the remaining upper grommet.

To install:

5. If the shock absorbers are being replaced, make sure that you use new grommets at the upper end. If you are reusing the shocks, it's a good idea to replace grommets that show any signs of wear or are more than a year old.
6. Install the lower grommet on the shock stem, with the shoulder facing upwards.
7. Mount the shock at the lower end, with the nut finger-tight.
8. Guide the shock stem into the mounting hole in the frame bracket.
9. Torque the lower end nut to 45 ft. lbs. (61 Nm).
10. Lower the vehicle.
11. Install the upper end grommet with the shoulder facing downwards.
12. Align the shoulders of the two upper end grommets in the frame mounting hole. Install the washer and nut. Torque the nut to 9 ft. lbs. (13 Nm).

➡Squeaking usually occurs when movement takes place between the rubber bushings and the metal parts. The squeaking may be eliminated by placing the bushings under greater pressure. This is accomplished either by adding additional washers where the cotter pins are used or by tightening the locknuts. Do not use mineral lubricant to stop the squeaking as it will deteriorate the rubber.

Stabilizer Bar

REMOVAL & INSTALLATION

See Figures 1 and 6

1. Raise and support the front end on jackstands.
2. Unbolt the stabilizer bar from the vertical links.
3. Unbolt the stabilizer bar from the frame brackets.

To install:

4. Replace any worn or damaged rubber parts.
5. Install the stabilizer bar at the links first, hand-tightening the fasteners.
6. Install the frame brackets, hand-tightening the fasteners.
7. Make sure everything is aligned, then tighten the retainers to specification:
   - Frame bracket bolts: 30 ft. lbs. (41 Nm)
   - Link nuts: 45 ft. lbs. (61 Nm)
8. Lower the vehicle.

Track Bar

REMOVAL & INSTALLATION

See Figures 1 and 7

1. If necessary, raise and safely support the vehicle for access; however, the track bar may normally be removed with the vehicle sitting on its wheels. (In order to assure proper alignment and installation, the suspension should support the vehicle's weight during this procedure.) Make sure the vehicle is on a level surface with the parking brake fully engaged and both the front and rear wheels chocked.

➡The springs must be supporting the weight of the vehicle while the track bar nuts are being torqued. If the springs are not in their normal ride position, vehicle ride comfort could be affected.

2. Unbolt the bar from the frame bracket and the axle bracket.
3. Installation is the reverse of removal. Torque the retaining nut at the axle shaft tube bracket to 74 ft. lbs. (100 Nm). Torque the retaining nut at the frame bracket to 125 ft. lbs. (168 Nm).

Steering Knuckle

REMOVAL & INSTALLATION

1987–89 Vehicles

See Figures 8 and 9

1. Remove the outer axle shaft.
2. Remove the caliper anchor plate from the knuckle.

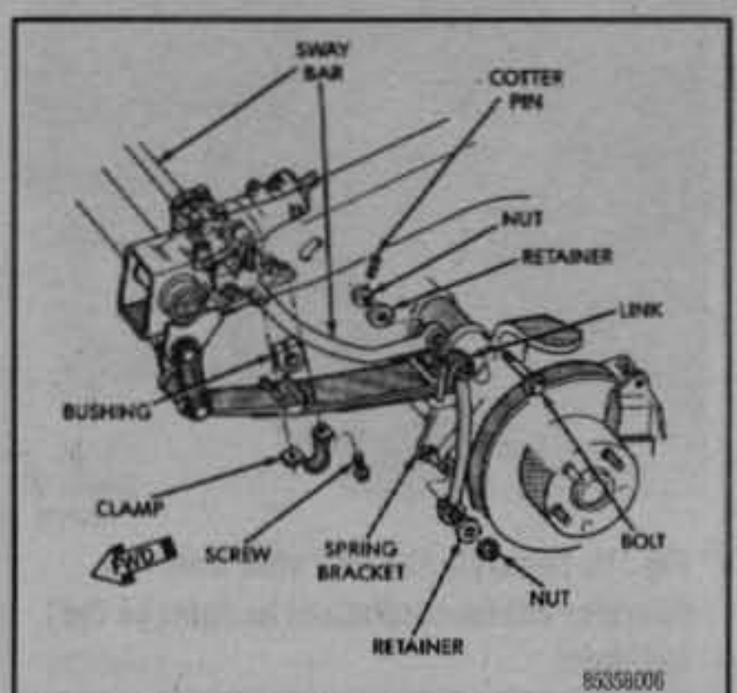

Fig. 6 Stabilizer bar mounting

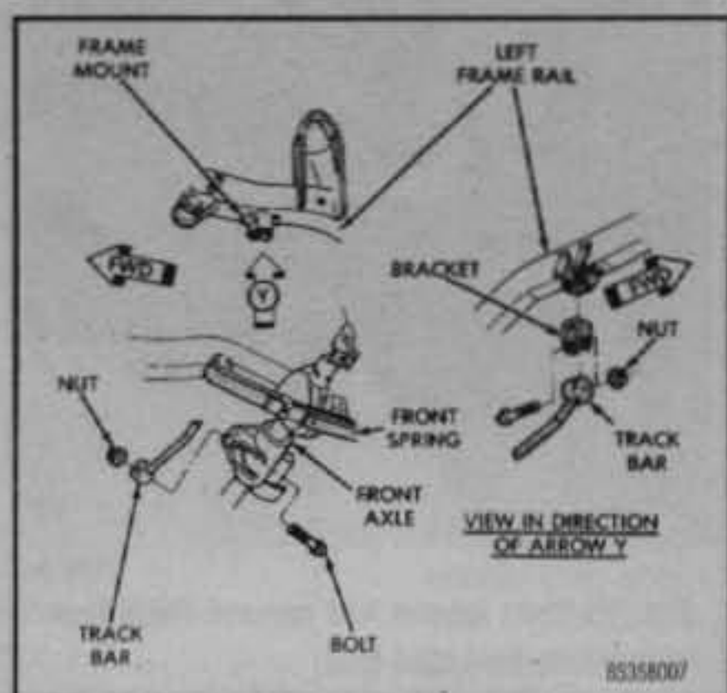

Fig. 7 Track bar mounting

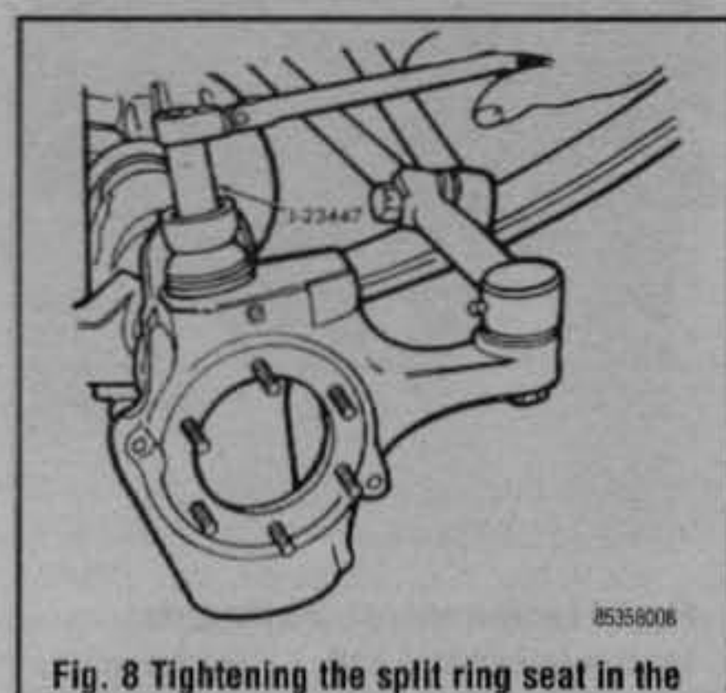

Fig. 8 Tightening the split ring seat in the bottom of the knuckle—1987–89 vehicles

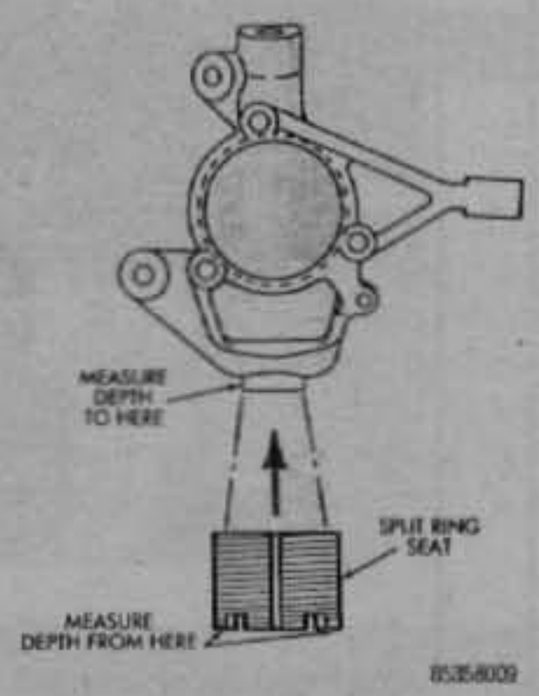

Fig. 9 The split ring seat—1987–89 vehicles

3. Remove the knuckle-to-ball joint cotter pins and nuts.
4. Drive the knuckle out with a brass hammer.
5. A split ring seat is located in the bottom of the knuckle. Remove the split ring seat with tool J23447 or equivalent, as shown.

To install:

➡A split ring seat is located in the bottom of the knuckle. During installation, this ring seat must be set to a depth of 5.23mm (0.206 in.) with tool J23447 or equivalent. Measure the depth at the indicated location on the ring seat to the machined lower outer surface surrounding the steering knuckle ball joint bore as shown.

6. Position the steering knuckle over the ball joint studs and install the knuckle-to-ball joint cotter pins and nuts.
7. Tighten the knuckle retaining nuts to 75 ft. lbs. (101 Nm)
8. Install the caliper anchor plate on the knuckle. Torque the caliper anchor bolts to 77 ft. lbs. (105 Nm).
9. Install the outer axle shaft.

1990–95 Vehicles

▶ See Figures 10 thru 16

1. Raise and safely support the vehicle.
2. Remove the hub bearing and axle shaft.
3. Disconnect the tie rod end or drag link from the steering knuckle.
4. If equipped, remove the ABS sensor wire and bracket.
5. Remove the upper and lower knuckle-to-ball joint cotter pins and nuts.
6. Strike the knuckle with a brass hammer and remove it.

To install:

7. Position the knuckle over the ball joint studs and install the nuts.
8. Tighten the upper ball joint nut to 75 ft. lbs. (101 Nm). Tighten the lower ball joint nut to 75 ft. lbs. (101 Nm) on 1990–91 vehicles or 80 ft. lbs. (109 Nm) on 1992–95 vehicles.
9. Install new cotter pins. If the ball stud hole does not align with the nut castellation, further tighten the nut until the cotter pin can be installed.

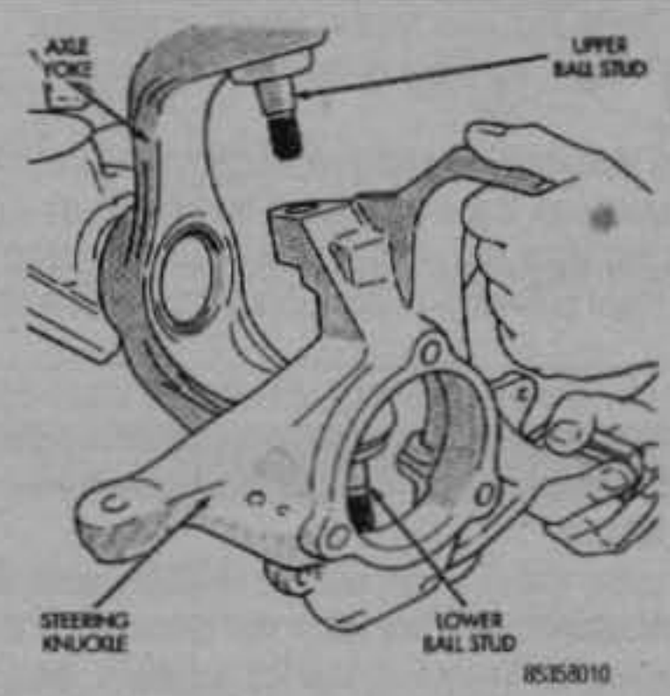

Fig. 10 Steering knuckle mounting—1990–95 vehicles

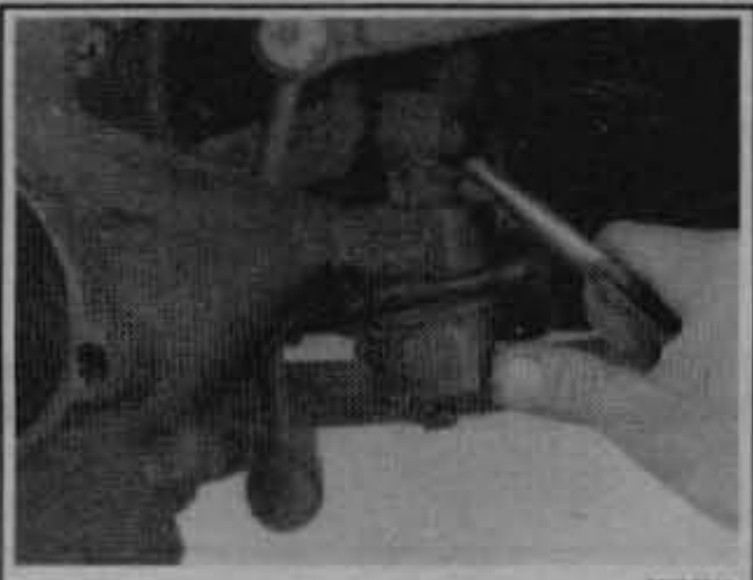

Fig. 11 Remove the cotter pin at the tie rod end or drag link on the steering knuckle

Fig. 12 Once the cotter pin is removed, loosen the retaining nut

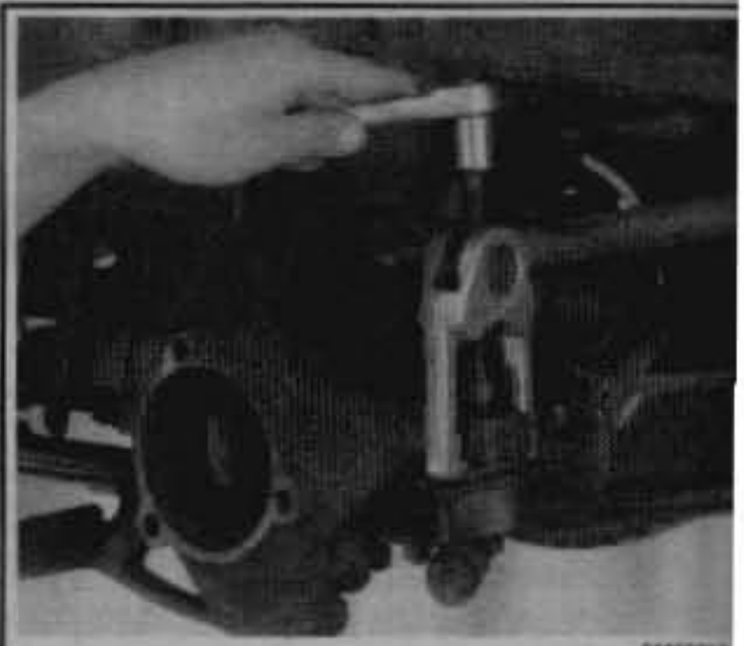

Fig. 13 Use a puller to separate the tie rod end or drag link from the steering knuckle

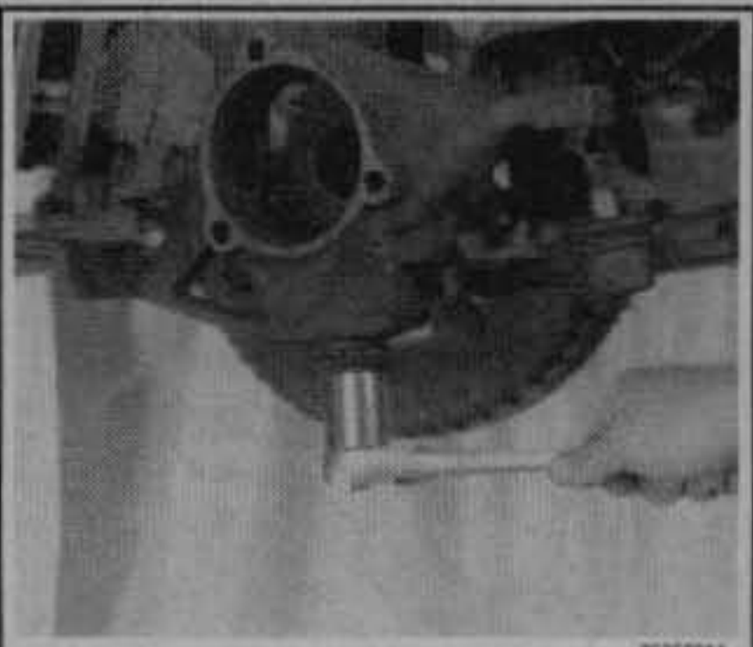

Fig. 14 Loosen and remove the lower knuckle-to-ball stud bolt

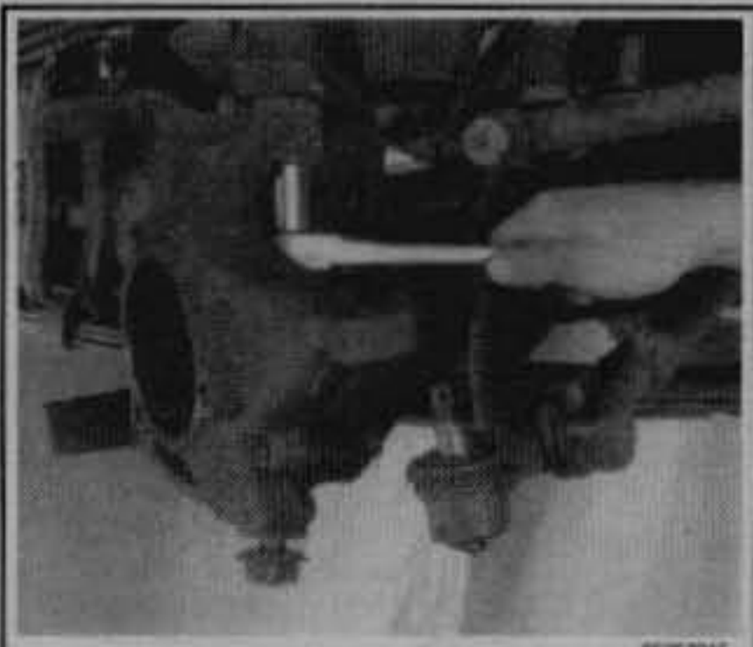

Fig. 15 Then loosen and remove the upper knuckle-to-ball stud bolt

Fig. 16 Separate the ball stud from the knuckle, but be careful not to damage the ball joint

10. Install the hub bearing and axle shaft.
11. Connect the tie rod end or drag link.
12. If equipped, install the ABS sensor wire and bracket.

Upper Ball Joint

REMOVAL & INSTALLATION

See Figure 17

This procedure requires the use of special ball joint pressing tools.

1. Remove the steering knuckle.
2. Position a ball joint removal tool, J-34503-1 and 34503-3 or equivalent, in a C-clamp as shown, and on the upper ball joint.
3. Tighten the clamp screw to remove the joint from the axle yoke.

To install:

4. Use tools J-34503-5 and J-34503-2 or equivalent in a similar manner, as illustrated, to install the ball joint.
5. Install the knuckle.

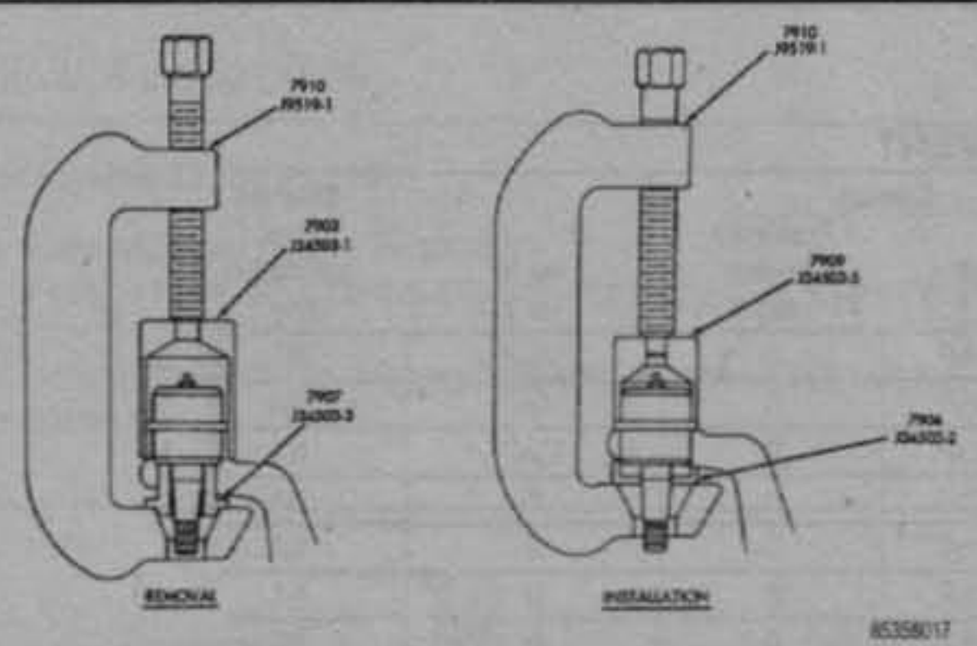

Fig. 17 Upper ball stud removal and installation tools—1990–95 vehicles

Lower Ball Joint

REMOVAL & INSTALLATION

See Figure 18

This procedure requires the use of special ball joint pressing tools.

1. Remove the steering knuckle.
2. Position a ball joint removal tool, J-34503-1 and J-34503-3, as shown, on the lower ball joint.
3. Tighten the clamp screw to remove the joint from the axle yoke.

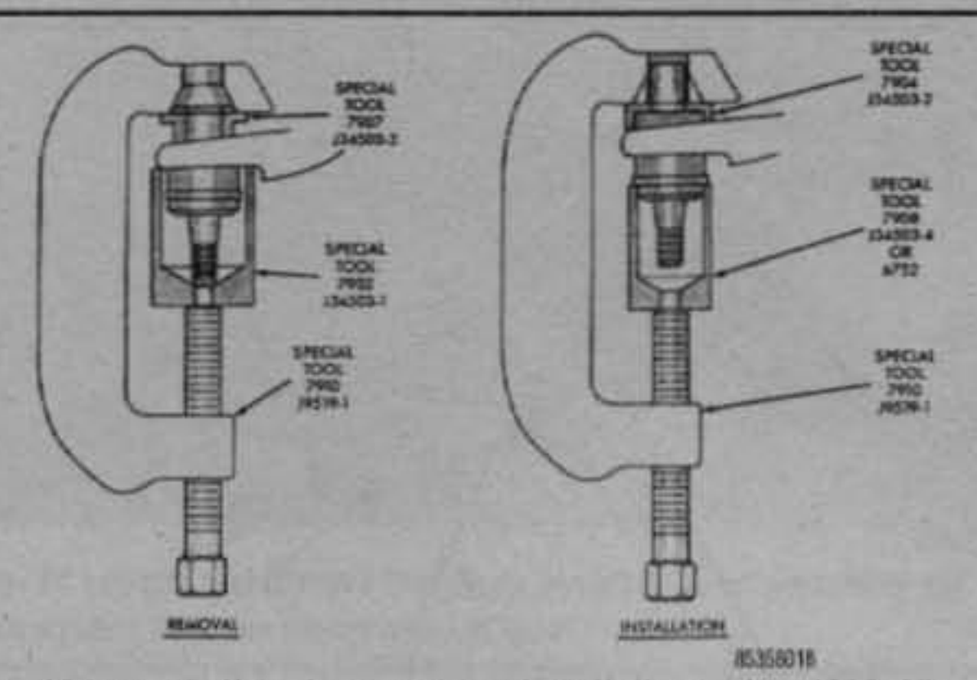

Fig. 18 Lower ball stud removal and installation tools—1990–95 vehicles

To install:

4. Use tool J-34503-4 and J-34503-2 to install the ball joint by reversing the removal procedure.
5. Install the knuckle.

Wheel Alignment

If the tires are worn unevenly, if the vehicle is not stable on the highway or if the handling seems poor, the wheel alignment should be checked. If an alignment problem is suspected, first check for improper tire inflation and other possible causes. These can be worn suspension or steering components, accident damage or even unmatched tires. If any worn or damaged components are found, they must be replaced before the wheels can be properly aligned. Wheel alignment requires very expensive equipment and involves minute adjustments which must be accurate; it should only be performed by a trained technician. Take your vehicle to a properly equipped shop.

Following is a description of the alignment angles which are adjustable on most vehicles and how they affect vehicle handling. Although these angles can apply to both the front and rear wheels, usually only the front suspension is adjustable.

CASTER

See Figure 19

Looking at a vehicle from the side, caster angle describes the steering axis rather than a wheel angle. The steering knuckle is attached to the axle yoke through ball joints or king pins. The wheel pivots around the line between these points to steer the vehicle. When the upper point is tilted back, this is described as positive caster. Having a positive caster tends to make the wheels self-centering, increasing directional stability. Excessive positive caster makes the wheels hard to steer, while an uneven caster will cause a pull to one side. Overloading the vehicle or sagging rear springs will affect caster, as will raising the rear of the vehicle. If the rear of the vehicle is lower than normal, the caster becomes more positive.

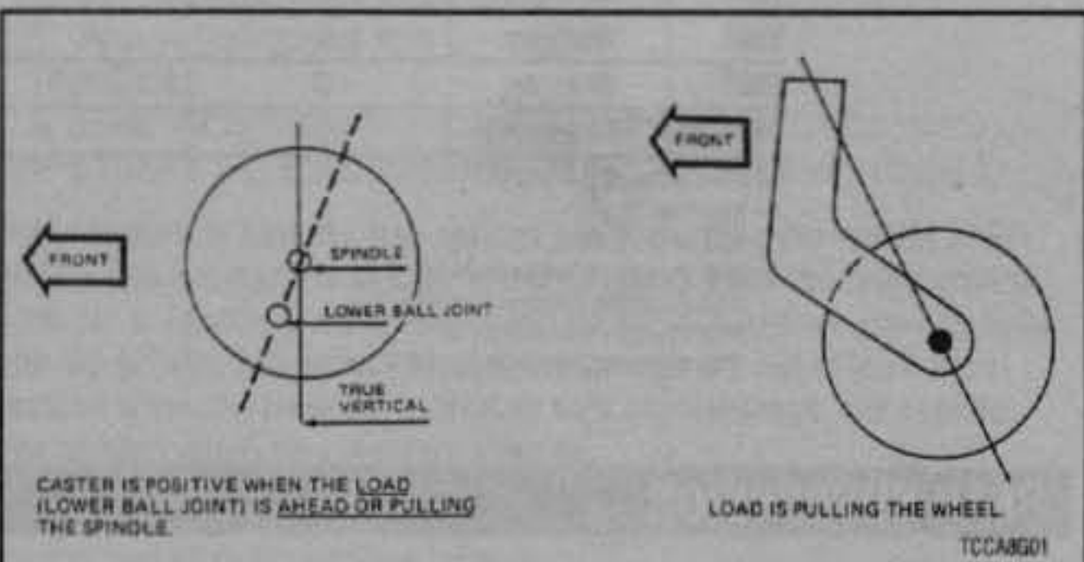

Fig. 19 Caster affects straight-line stability. Caster wheels used on shopping carts, for example, employ positive caster

CAMBER

See Figure 20

Looking from the front of the vehicle, camber is the inward or outward tilt of the top of wheels. When the tops of the wheels are tilted in, this is negative camber; if they are tilted out, it is positive. In a turn, a slight amount of negative camber helps maximize contact of the tire with the road. However, too much negative camber compromises straight-line stability, increases bump steer and torque steer.

TOE

See Figure 21

Looking down at the wheels from above the vehicle, toe angle is the distance between the front of the wheels relative to the distance between the back of the wheels. If the wheels are closer at the front, they are said to be toed-in or to have negative toe. A small amount of negative toe enhances directional stability and provides a smoother ride on the highway.

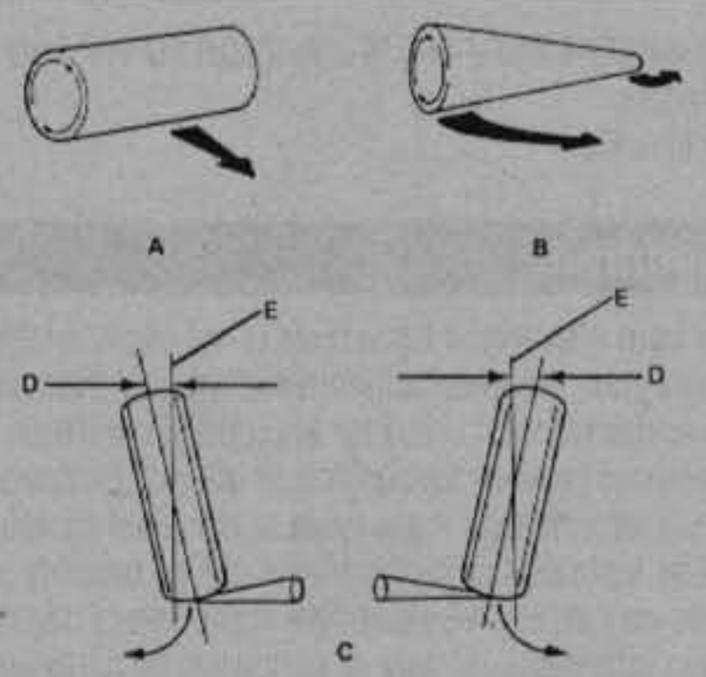

A A CYLINDER WILL ROLL STRAIGHT AHEAD
B A CONE WILL ROLL IN A CIRCLE TOWARD THE SMALL END
C TIRE CONTACTS THE ROAD SURFACE
D POSITIVE CAMBER ANGLE
E VERTICAL

TCCA8G02

Fig. 20 Camber influences tire contact with the road

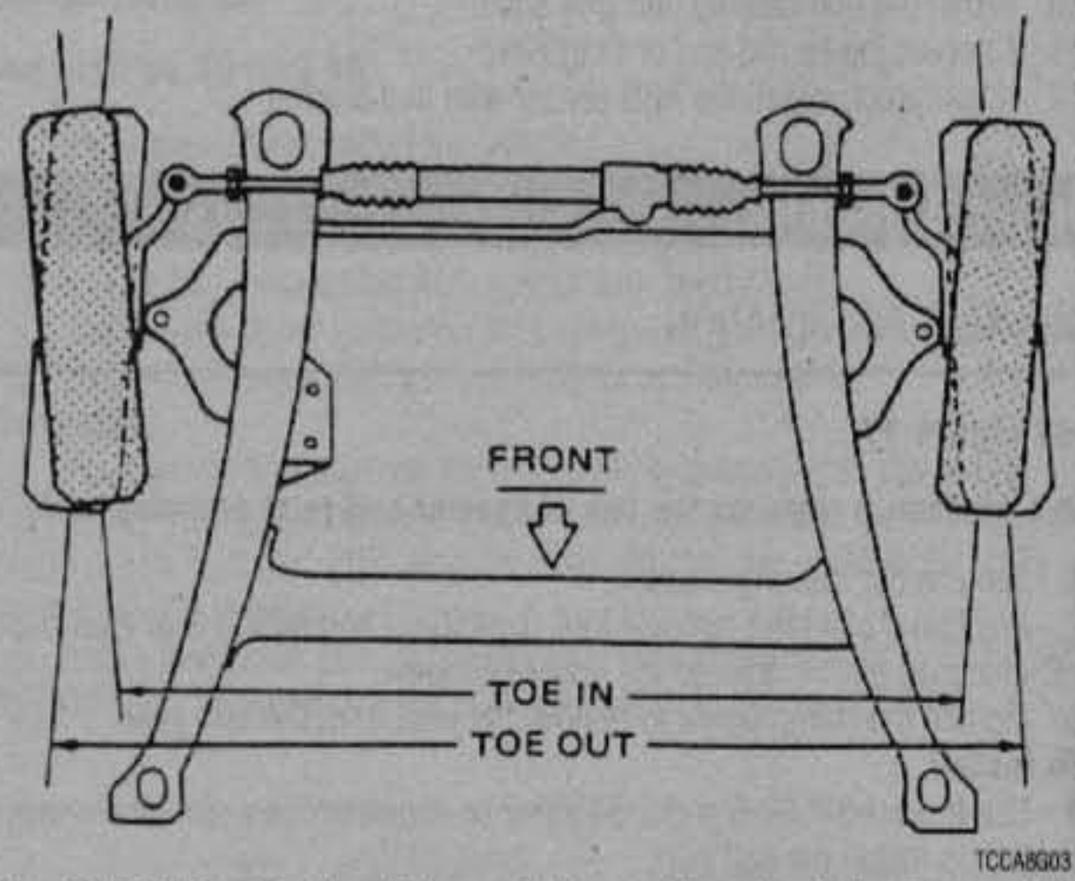

Fig. 21 With toe-in, the distance between the wheels is closer at the front than at the rear

WHEEL ALIGNMENT

Year	Model	Caster Range (deg.)	Caster Preferred Setting (deg.)	Camber Range (deg.)	Camber Preferred Setting (deg.)	Toe-in (in.)	Steering Axis Inclination (deg.)
1987	Wrangler	①	①	½N-½P	0	1/32P	NA
1988	Wrangler	①	①	½N-½P	0	1/32P	NA
1989	Wrangler	①	②	½N-½P	0	1/32P	NA
1990	Wrangler	①	②	½N-½P	0	0	NA
1991	Wrangler	①	②	½N-½P	0	0	NA
1992	Wrangler	①	②	½N-½P	0	0	NA
1993	Wrangler	①	②	½N-½P	0	0	NA
1994-95	Wrangler	①	②	½N-½P	0	0	NA

NA—Not available
N—Negative
P—Positive
① With manual transmission: 7½P-8½P
With automatic transmission: 6P-7P
② With manual transmission: 8P
With automatic transmission: 6½P

85358C01

REAR SUSPENSION

All springs should be examined periodically for broken or shifted leaves, loose or missing clips, improper angle of the spring shackles, and incorrect positioning of the springs on the saddles. Springs with shifted leaves do not retain their normal strength. Missing clips may permit the spring leaves to fan out or break on rebound. Broken leaves may make the vehicle hard to handle or permit the axle to shift out of line. Weakened springs may break causing difficulty in steering. Spring attaching clips or bolts must be tight. It is suggested that they be checked at each vehicle inspection.

Springs

REMOVAL & INSTALLATION

See Figure 22

1. Raise the vehicle with a jack under the axle. Place a jackstand under the frame side rail. Then lower the axle jack so the load is relieved from the spring and the wheels just touch the floor.
2. Disconnect the shock absorber from the axle shaft tube bracket.
3. Remove the U-bolt nuts, the U-bolts and the spring bracket from the axle shaft tube.
4. Remove the bolts attaching the spring eyes to the rear shackle plate and the front frame bracket.
5. Remove the spring from the vehicle.
6. Inspect the bushings in the eye of the main spring leaf and the bushings of the spring shackle for excessive wear. Replace if necessary.
7. The spring can be disassembled to replace an individual spring leaf, by removing the clips and the center bolts.

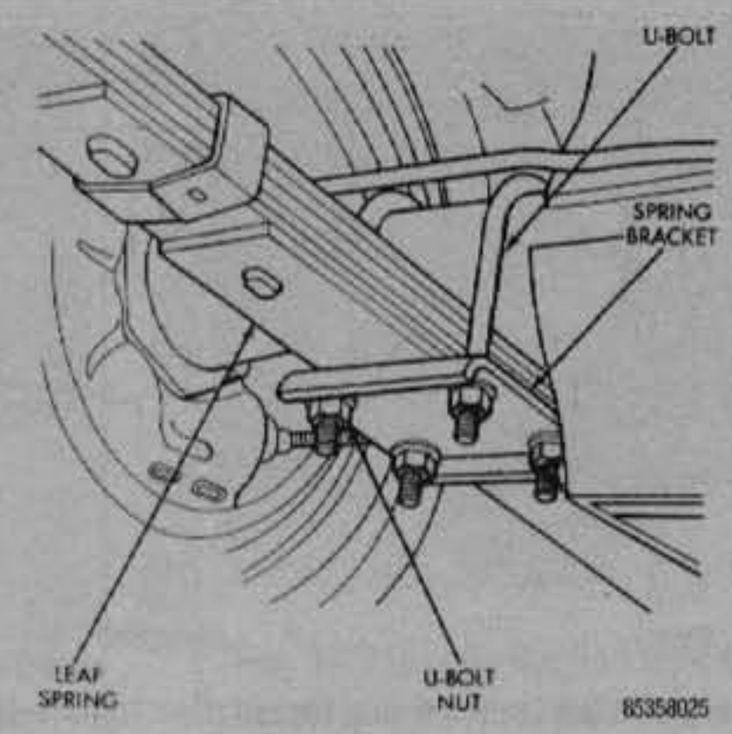

Fig. 22 Rear spring mounting

To install:

8. Install the spring spring eyes at the rear shackle plate and the front frame bracket.
9. Install the spring eye attaching bolts and nuts and only finger-tighten the nuts at this time.
10. Move the axle into position on the spring by lowering the axle jack. Place the spring center bolt in the axle saddle hole.

➡Be sure that the center bolt is properly centered in the axle saddle.

11. Install the spring bracket, the U-bolts and the U-bolt nuts. Tighten the nuts to 90 ft. lbs. (122 Nm).
12. Connect the shock absorber to the axle tube bracket and tighten the nut to 75 ft. lbs. (102 Nm).
13. Install the wheel/tires and tighten the lug nuts to 75 ft. lbs. (102 Nm).
14. Remove the jack and allow the weight of the vehicle to seat the bushings in their operating positions. Tighten the front spring eye-to-shackle plate bolt to 95 ft. lbs. (129 Nm)
15. Tighten the rear spring eye-to-frame bracket bolt to 105 ft. lbs. (142 Nm)

Shock Absorbers

REMOVAL & INSTALLATION

See Figures 23, 24 and 25

1. Raise and safely support the vehicle.
2. Position a jack under the rear axle and raise it enough to relieve the axle weight from the rear springs.
3. Remove the shock absorber upper attaching nut and washer from the frame bracket stud.

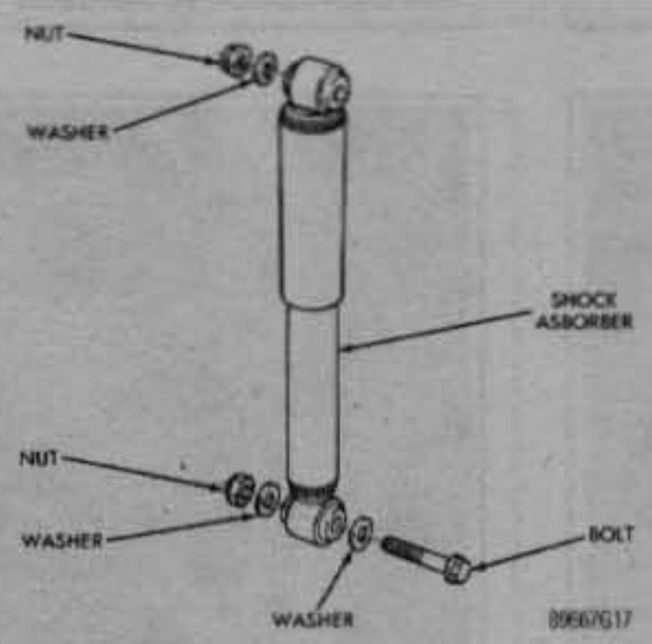

Fig. 23 Rear shock absorber

Fig. 24 Loosen and remove the shock absorber upper attaching nut and washer from the frame bracket stud

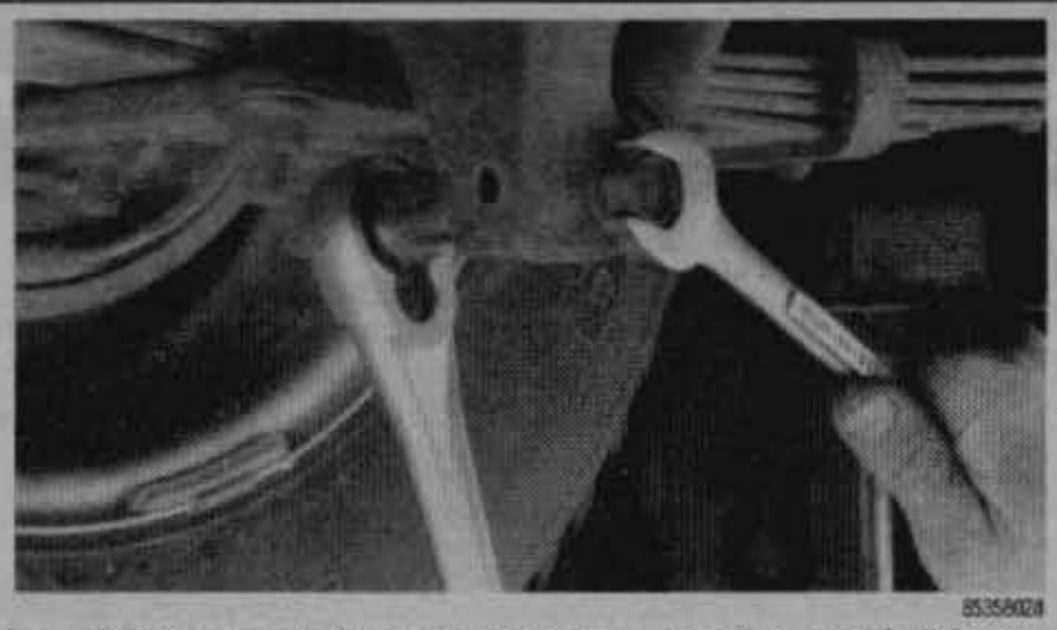

Fig. 25 Then remove the lower attaching nut washers and bolt from the axle shaft tube bracket

4. Remove the shock absorber lower attaching nut washers and bolt from the axle shaft tube bracket, and remove the shock absorber.
5. Install the shocks in reverse order of the removal procedure. Torque the upper nut and lower bolt to 44 ft. lbs. (60 Nm).

Track Bar

REMOVAL & INSTALLATION

See Figure 26

1. If necessary for access, raise and safely support the vehicle.
2. If the vehicle is raised for access, position a jack under the rear axle and raise it enough to relieve the axle weight from the rear springs.
3. Unbolt the bar from the frame bracket.
4. Unbolt the bar from the axle tube.
5. Remove the track bar from the vehicle.

To install:

6. Lower the vehicle to its normal ride position. Make sure the vehicle's parking brake is fully engaged and both the front and rear wheels chocked.

➡It is important that the rear springs are supporting the weight of the vehicle (the springs are at their usual position) when the replacement track bar is installed, otherwise it will be difficult to align the bolt hole with the bracket bolt holes. Also, if the springs are not at their usual position when the track bar attaching nuts are tightened, the vehicle ride comfort could be adversely affected.

7. Position the ends of the replacement track bar in the frame and axle brackets and insert the track bar bolts.
8. Install and tighten the track bar attaching nuts to 125 ft. lbs. (168 Nm).

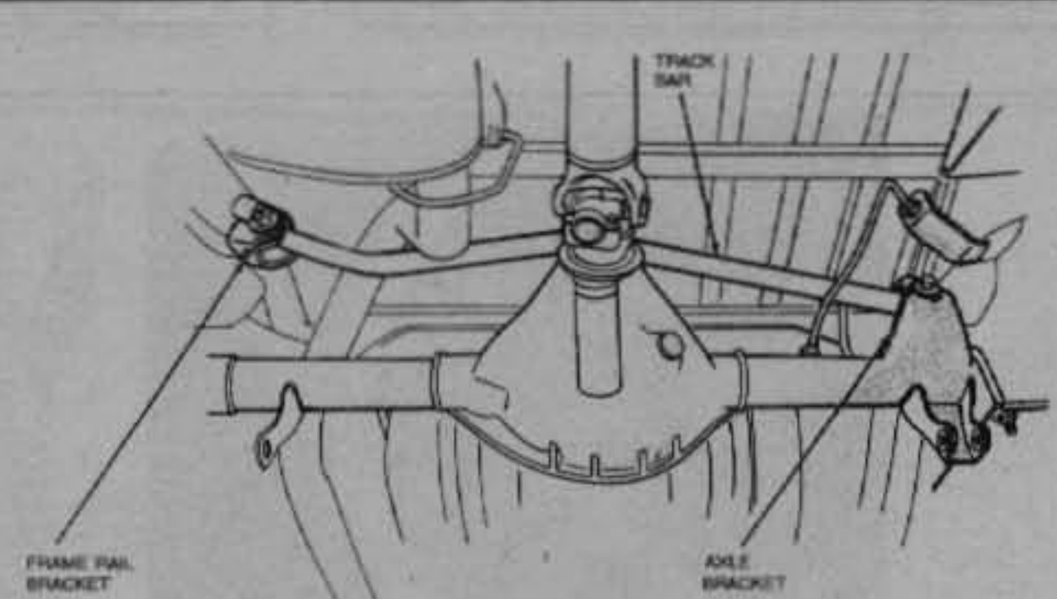

Fig. 26 Rear track bar

STEERING

Steering Wheel

REMOVAL & INSTALLATION

See Figures 27 thru 34

1. Disconnect the negative battery cable.
2. Place the front wheels in the straight-ahead position.
3. Remove the horn pad from the steering wheel.
4. Remove the steering wheel retaining nut.
5. Remove the horn contact components: bushing, receiver, flexplate and insulator.
6. Remove the horn contact pin and bushing from the steering wheel.
7. Paint or scribe alignment marks on the steering wheel and shaft for reference during assembly.
8. Remove the steering wheel using a puller.

To install:

9. Position the steering wheel on the shaft, aligning the scribed marks.
10. Install the horn contact pin and bushing.
11. Install the horn contact components: bushing, receiver, flexplate and insulator.
12. Install the steering wheel nut and washer. Tighten the nut to 25 ft. lbs. (34 Nm).
13. Install the horn pad.
14. Connect the negative battery cable.

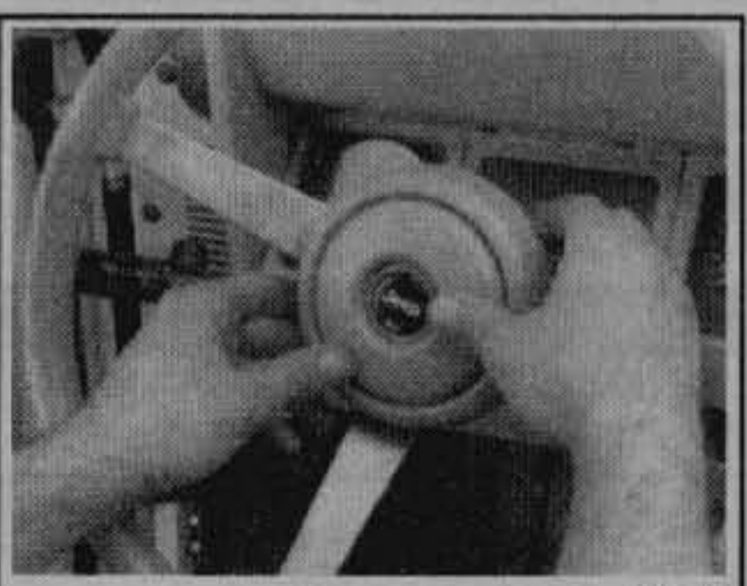

85358030

Fig. 27 The horn pad is usually removed from the steering wheel by prying carefully—1992 Wrangler shown

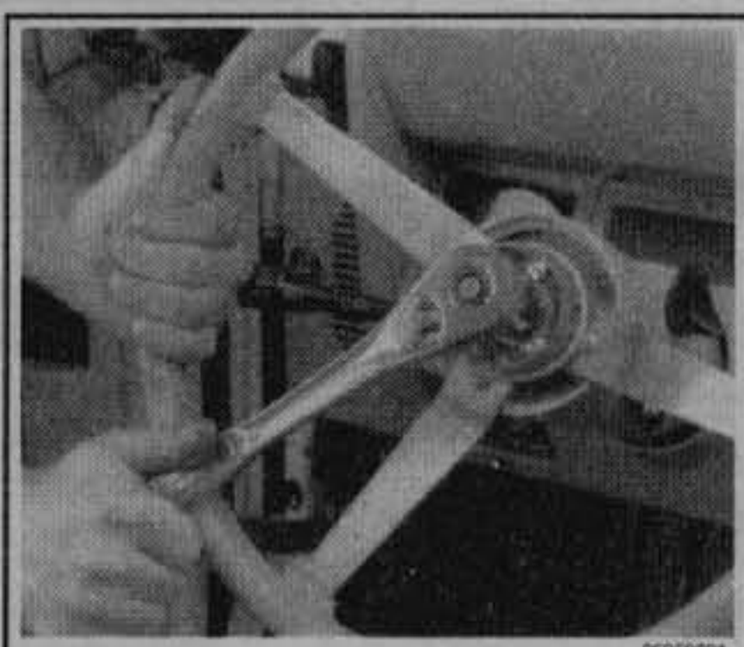

85358031

Fig. 28 Remove the steering wheel retaining nut

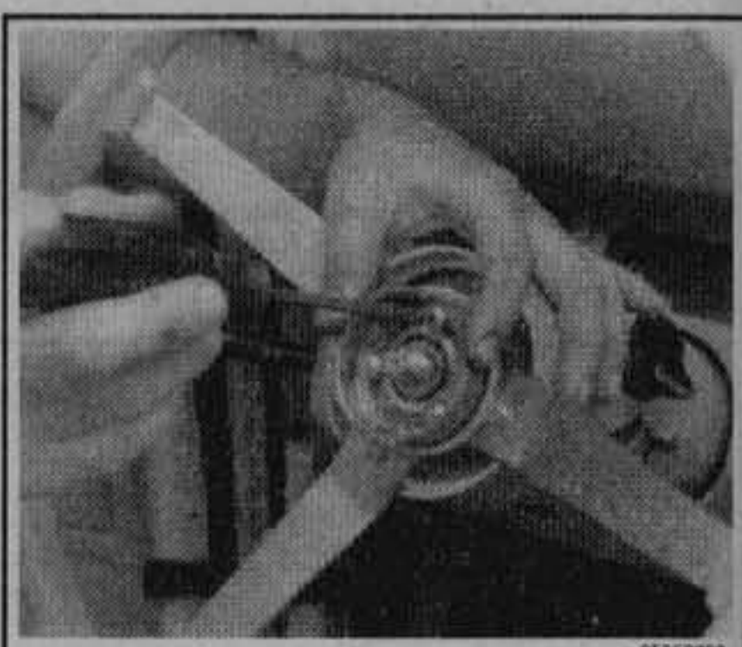

85358032

Fig. 29 Then remove the screws retaining the horn contact components

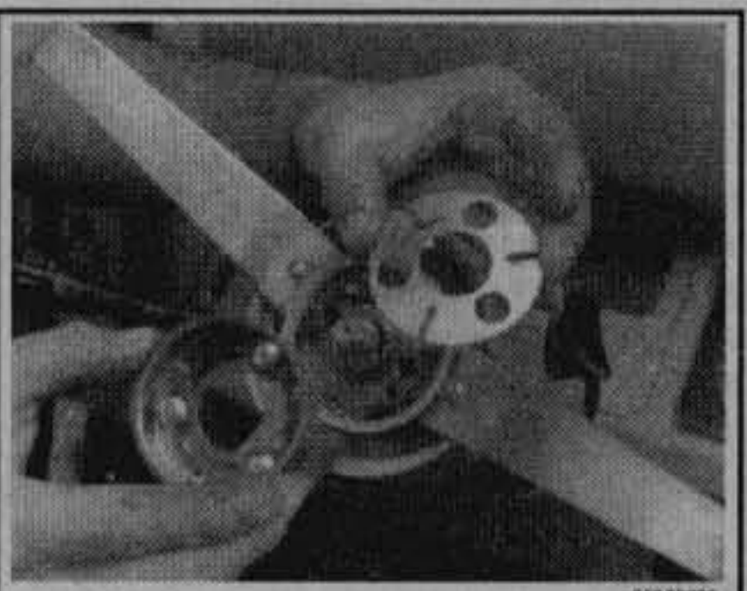

85358033

Fig. 30 With the screws unthreaded, remove the bushing, receiver and flexplate

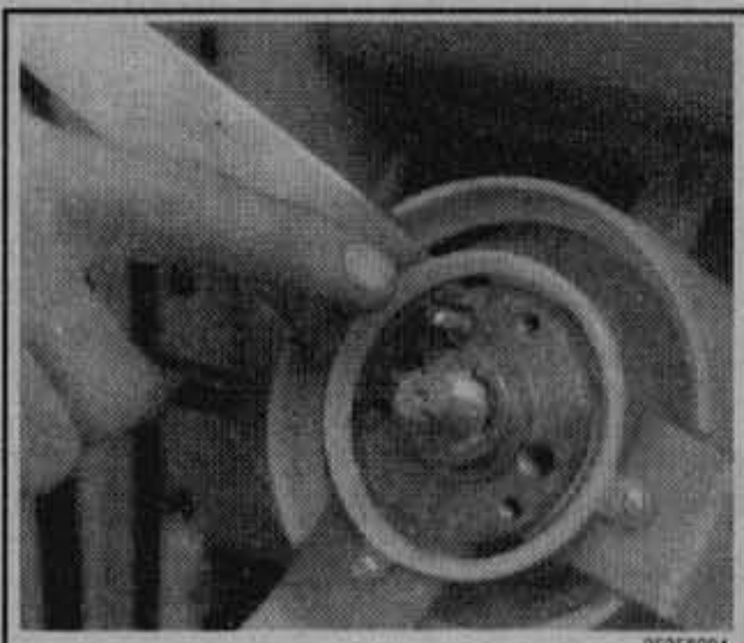

85358034

Fig. 31 Be sure to remove and keep track of the horn contact pin and bushing

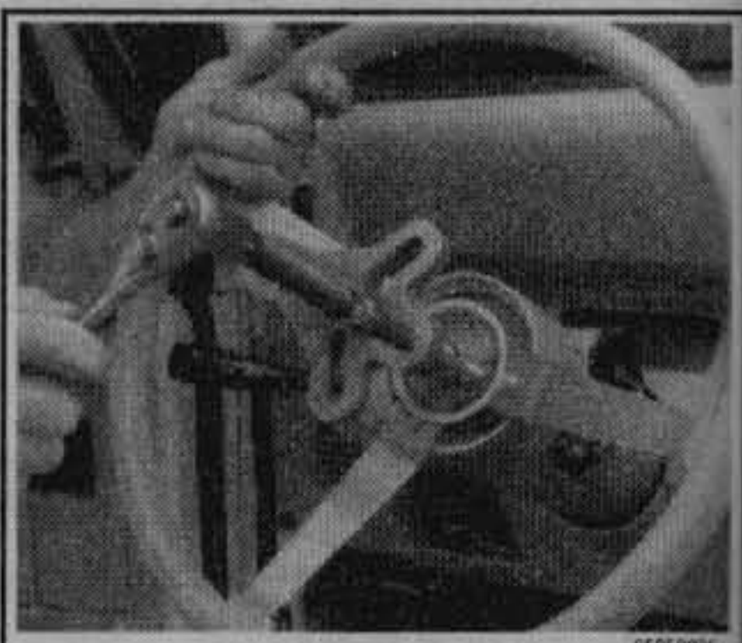

85358035

Fig. 32 Remove the steering wheel using a suitable threaded puller

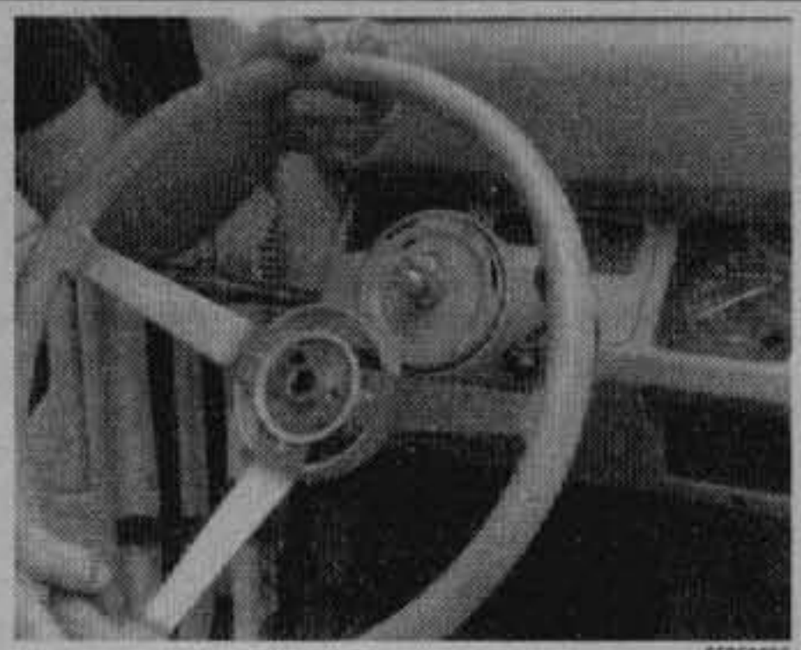

85358036

Fig. 33 Once the wheel is loosened, remove the puller and lift the wheel from the steering shaft

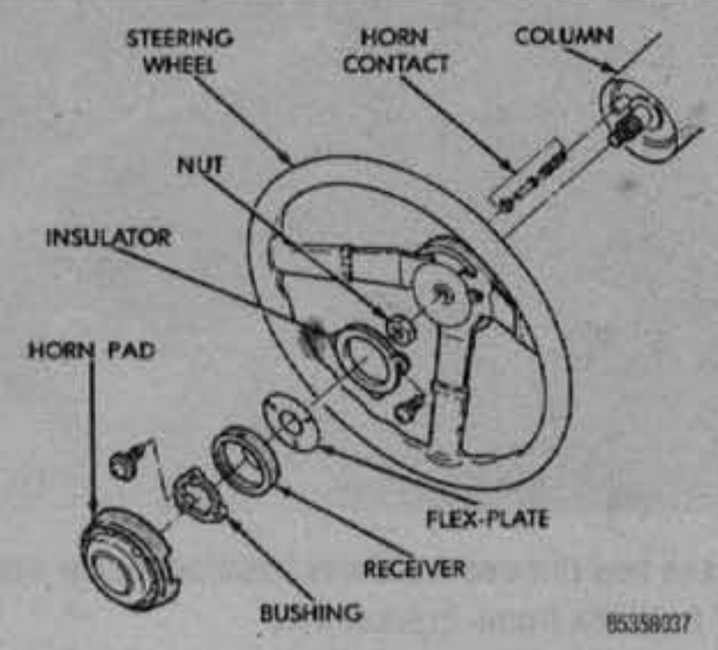

Fig. 34 Exploded view of a common steering wheel and related components

Turn Signal Switch

REMOVAL & INSTALLATION

See Figures 34 thru 41

1. Disconnect the battery ground.
2. Cover the painted areas of the column.
3. Remove the column-to-dash bezel.
4. With tilt columns, place the column in the non-tilt position.
5. Turn the key to the **LOCK** position, then remove the steering wheel and horn components.
6. Remove the lockplate cover.
7. Compress the lockplate using tool C4156 or equivalent, and unseat the steering shaft snapring.

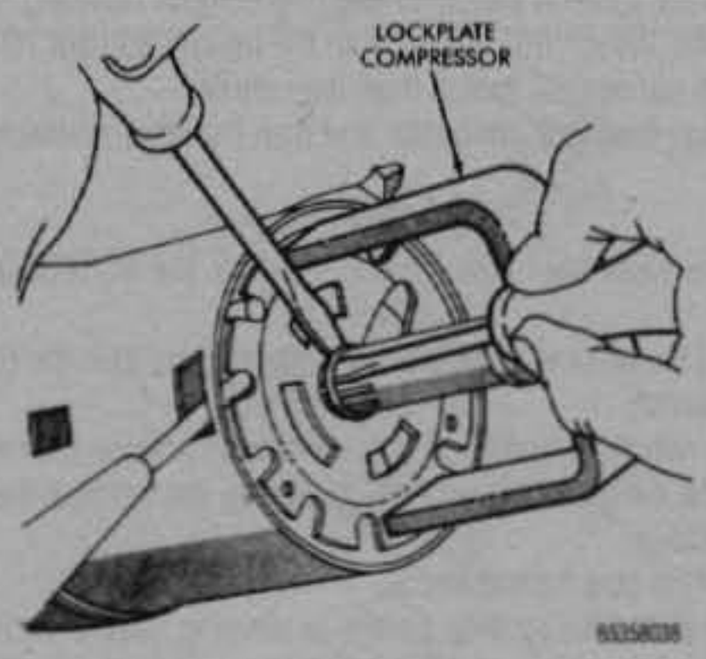

Fig. 35 Lockplate removal

CAUTION

Do not attempt to remove the lockplate without compressor tool C4156 as the lockplate is under heavy spring pressure.

8. Remove the compressor and snapring.
9. Remove the lockplate, canceling cam and upper bearing preload spring. Remove the horn button components from the cancelling cam.
10. Remove the hazard warning knob. Press the knob inward and turn counterclockwise to remove it.
11. Remove the actuator arm attaching screw.
12. Remove the turn signal switch attaching screw.
13. Remove the five lower steering column shroud screws and slide the shroud towards the steering wheel. Apply upward pressure to the shroud and downward pressure to the indicator panel in order to release the holding tabs.
14. Remove the cover under the column.
15. If the vehicle is equipped with a column shift, remove the indicator (PRNDL) cable clip.
16. Remove the nuts (usually 2) holding the steering column bracket to the brake sled, then remove the bolts (usually 4) holding the steering column bracket to the column.
17. Loosen the column brace mounting nut at the driver's side kick panel, this will allow the column to drop.
18. Push the upper connector up and out of the turn signal connector.
19. Pry up the locking tabs of the turn signal connector and remove the connector from the column bracket.
20. Remove the plastic harness cover by pulling upward and slide the cover off the harness.
21. Remove the turn signal switch by pulling straight out of the housing.
22. Installation is the reverse of removal, but keep the following in mind:
    a. When installing the turn signal switch, make sure the wires are laying flat on the bottom inside of the column.
    b. Compress the lockplate using tool C4156 or equivalent, and install the steering shaft snapring.

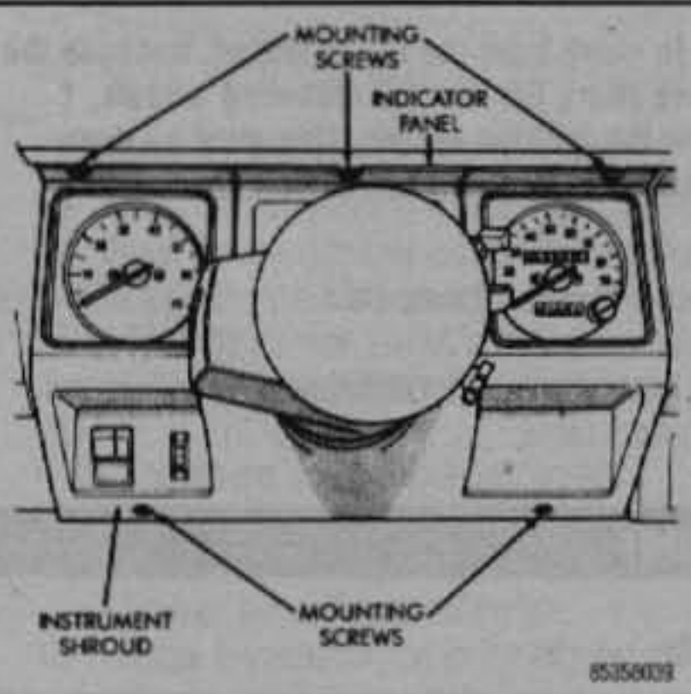

Fig. 36 Instrument shroud mounting

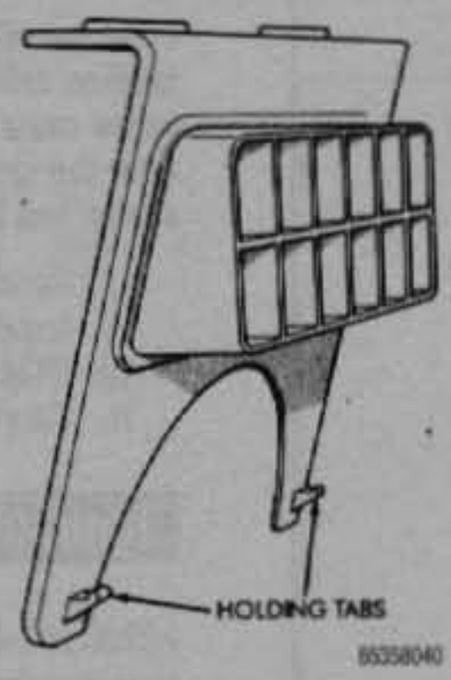

Fig. 37 Indicator panel mounting

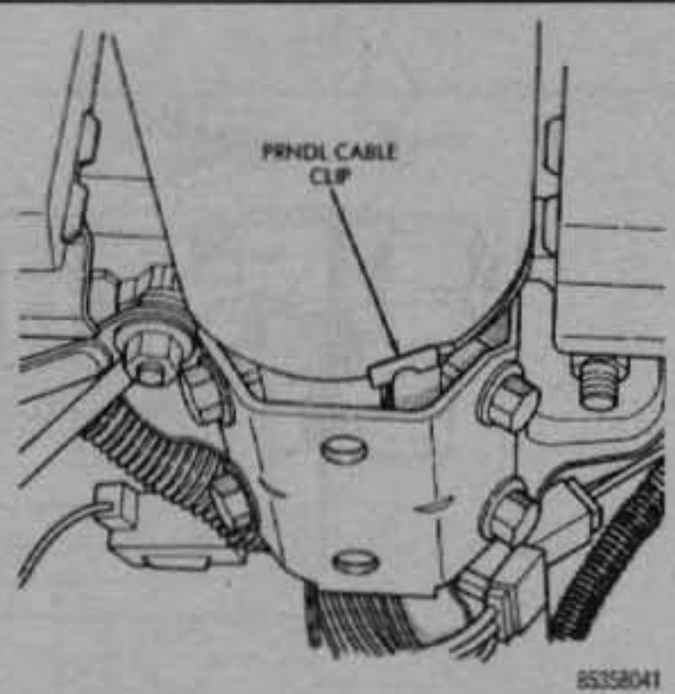

Fig. 38 PRNDL cable clip mounting

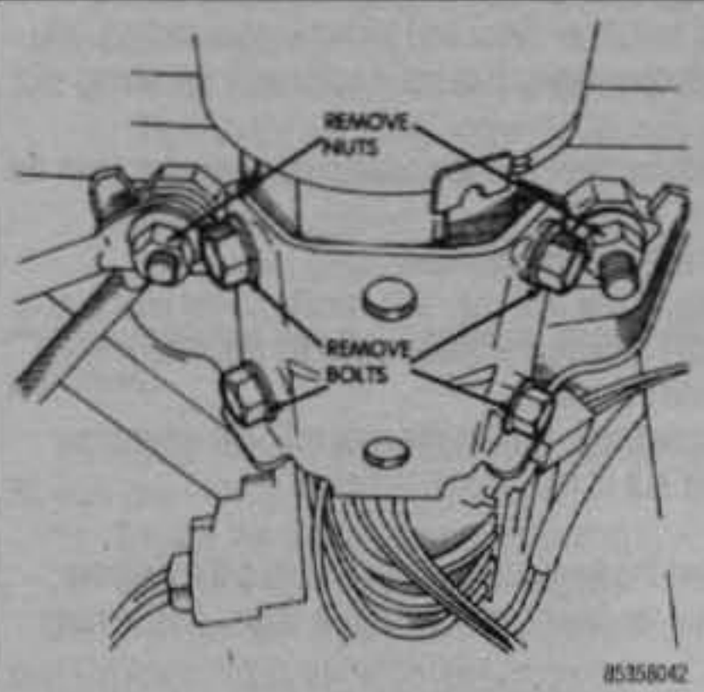

Fig. 39 Lower steering column retainers

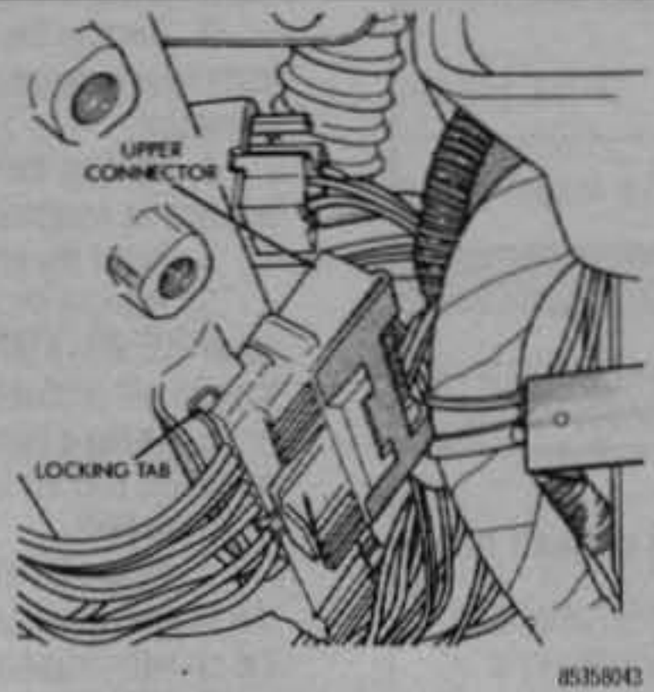

Fig. 40 Turn signal connector

Fig. 41 Plastic harness cover

c. On vehicles equipped with column shift, install the indicator (PRNDL) cable clip with the shift indicator on N. Move the selector through the range and make sure it lines up with each letter.

Ignition Switch

REMOVAL & INSTALLATION

1987–91 Vehicles

See Figures 42 and 43

1. Disconnect the negative battery cable.
2. Place the ignition lock in the **LOCK** position.
3. Remove the switch mounting screws (usually 2).
4. Disconnect the switch from the remote rod.
5. Disconnect the wiring and remove the switch.

To install:

6. With the actuator rod disconnected, hold the ignition switch in its installed position.
7. Move the slider to the extreme left **ACC** position.
8. For non-tilt columns:
   a. Position the actuator rod in the slider hole and install the switch to the steering column by finger-tightening the retaining screws. Be careful not to move the slider out of detent.
   b. Secure the key in the **ACC** position and push the switch down the column slightly to remove the slack in the actuator rod.
9. For tilt columns:
   a. Position the actuator rod into the slider hole.
   b. Loosely install the ignition switch to the column using the attaching screws.
   c. Push the switch down the steering column to remove the lash in the actuator rod while holding the key in the **ACC** position. Be careful not to move the slider out of detent.

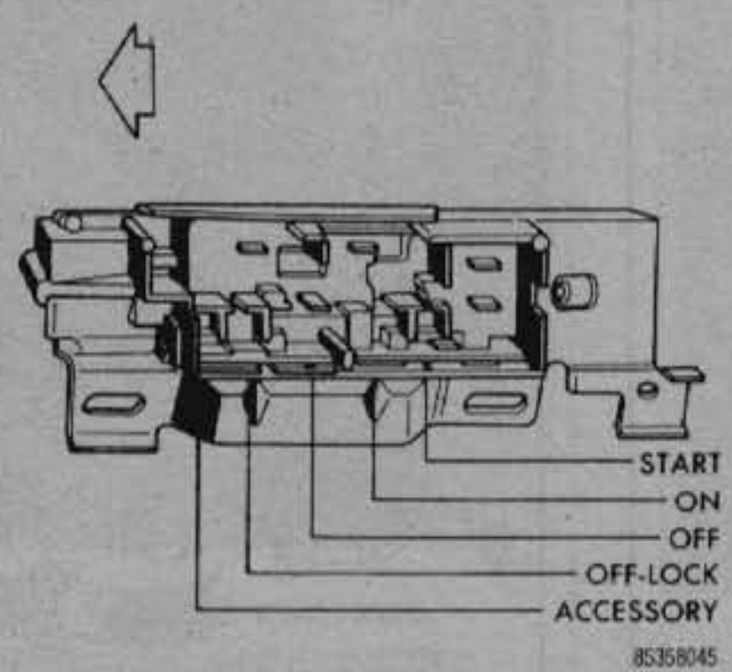

Fig. 42 Ignition switch detent positions—standard column

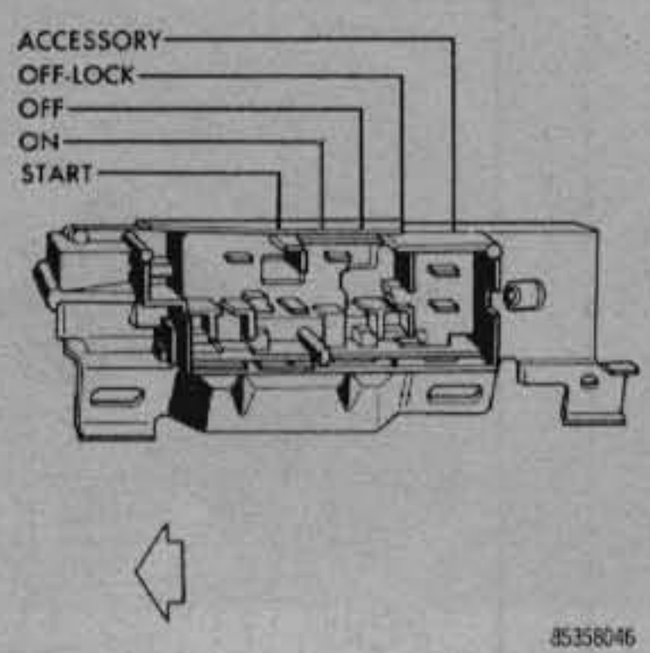

Fig. 43 Ignition switch detent positions—tilt column

10. Tighten the attaching screws.
11. Engage the white connector and then the black connector to the switch.
12. Connect the negative battery cable.

1992–95 Vehicles

See Figures 42 and 43

1. Disconnect the negative battery cable.
2. If equipped, remove the windshield wiper intermittent control module and its bracket.
3. Turn the ignition to the **ACC** position.
4. Remove the headlamp dimmer switch attaching nuts.
5. Lift the switch from the steering column while disengaging the actuator rod.
6. Tape the ignition and dimmer switch actuator rods to the steering column to prevent disengagement from the upper position of the steering column.
7. Remove the ignition switch-to-steering column retaining screws.
8. Disengage the ignition switch from the remote actuator rod by lifting straight up, then remove the switch from the column.
9. Disengage the black connector and then the other connector from the switch.

To install:

10. Place the slider bar in the ignition switch to the ACCESSORY detent position.
11. Connect the colored (non-black) connector and then the black connector to the ignition switch.
12. Slip the remote actuator rod into the access hole on the switch.
13. Install the switch to the column, be careful not to move the slider bar out of the detent position.
14. Remove the tape from the rods.
15. Loosely install the ignition switch-to-steering column screws.
16. While holding the key in the **ACC** position, slide the ignition switch up towards the steering wheel (non-tilt column) or down away from the steering wheel (tilt steering column) in order to remove slack from the switch. Tighten the attaching screws.

➡Do not allow the ignition to move from the ACC position. Because the ignition and dimmer switches share the same 2 mounting screws, 1 screw must be removed from the ignition switch. This must be done after the ignition switch has been adjusted and before the dimmer switch has been installed.

17. Remove 1 screw, but do not remove the stud/nut.
18. Install and adjust the dimmer switch.
19. If equipped, install the intermittent wiper control module and bracket.
20. Connect the negative battery cable.

Ignition Lock Cylinder

REMOVAL & INSTALLATION

See Figures 44 and 45

1. Disconnect the battery ground cable.
2. Remove the turn signal switch as described earlier in this section. You don't have to remove the switch completely, just set it aside with the wiring still connected.
3. Remove the wiper switch harness and any additional harnesses from the column, as necessary.
4. Insert the key and turn it to the **ON** position.
5. Remove the key warning buzzer and clip, with needle nosed pliers, or a paper clip with a 90° bend. Don't remove the buzzer and clip separately, since the clip will probably fall into the column.
6. Using a thin bladed screwdriver, remove the lock cylinder retaining screw and pull the lock cylinder out of the column housing.

To install:

7. Before installation, insert the key into the cylinder. Hold the cylinder sleeve so it won't turn and rotate the key clockwise until it stops. This retracts the cylinder actuator.
8. Align the lock cylinder tab with the housing keyway.

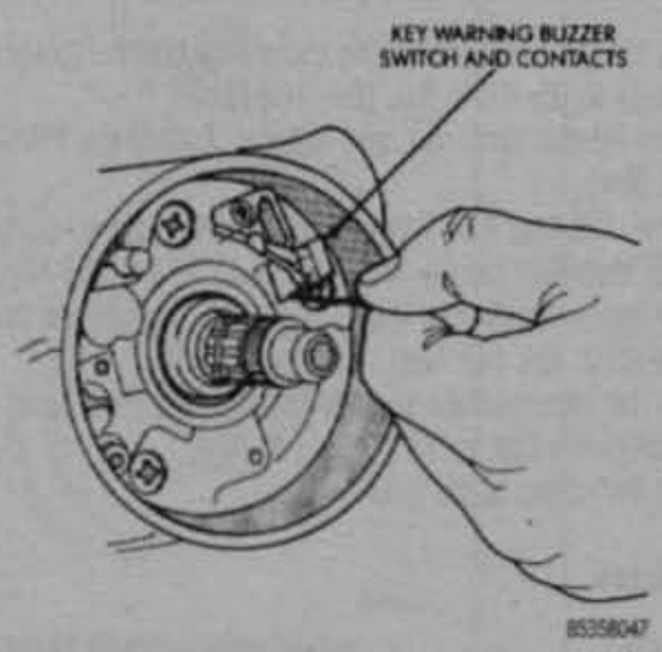

Fig. 44 Key warning buzzer/contacts removal

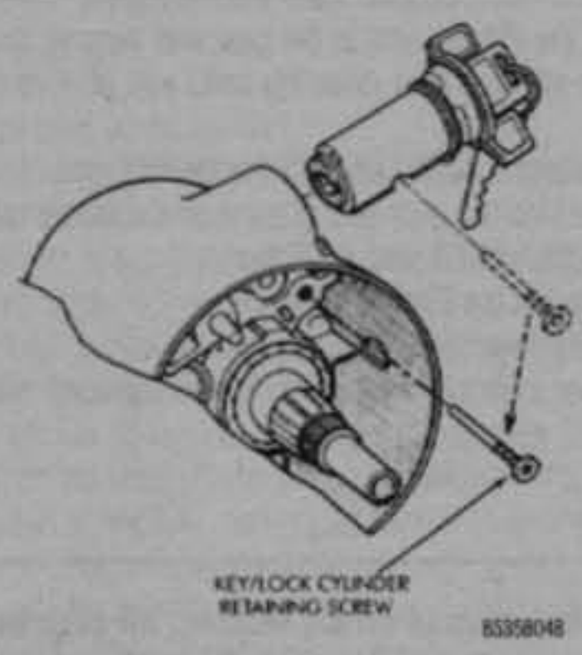

Fig. 45 Key/lock cylinder mounting

9. Push the cylinder into the housing until it bottoms.
10. Install the cylinder retaining screw and torque it to 40 inch lbs. (4.5 Nm).
11. Turn the key to **ON**.
12. Install the key warning buzzer switch and clip.
13. When installing the ignition switch, engage the actuator rod in the bottom of the switch. Install the switch on the column and tighten the screws.
14. Adjust the ignition switch as follows:
    a. Insert the key and turn the lock cylinder to the **OFF/UNLOCK** position.
    b. Loosen the switch mounting screws.
    c. Move the switch down the column to eliminate any play and tighten the screws to 35 inch lbs. (4 Nm).
    d. Engage the wiring to the switch.
15. Engage the actuator rod in the dimmer switch, then install the switch on the column.
16. Untape the rod.
17. Adjust the dimmer switch as follows:
    a. Compress the switch slightly and insert a 3/32 in. (2.4mm) drill bit in the switch adjusting hole.
    b. Move the switch towards the steering wheel to remove any play.
    c. Tighten the attaching screws to 35 inch lbs. (4 Nm).
    d. Connect the battery ground.
    e. Remove the drill bit.
    f. Check the operation of the switch.

➡If your vehicle has a tilt column, check the switch operation in all positions.

18. Install the turn signal switch and attaching screws. Torque the screws to 35 inch lbs. (4 Nm).
19. Engage the wiring harness connectors.
20. Install the wiring harness protectors.
21. With the turn signal switch in the neutral position, install the hazard warning knob. Press the knob inward and turn clockwise to install it.
22. Install the lever. Torque the attaching screws to 35 inch lbs. (4 Nm).
23. Install the upper bearing preload spring.
24. Install the canceling cam.
25. Install the lockplate.
26. Using the compressor, install the snapring.
27. Install the lockplate cover.
28. Install the steering wheel.
29. Loosen the toe plate screws.
30. Install the column-to-dash bezel.
31. Connect the battery ground.

Manual Steering Gear

REMOVAL & INSTALLATION

▶ See Figure 46

1. Remove the intermediate shaft-to-wormshaft coupling clamp bolt and disconnect the intermediate shaft.
2. Raise and support the front end on jackstands.
3. Disconnect the center link from the Pitman arm.
4. Remove the front stabilizer bar.
5. Remove the Pitman arm nut and washer.
6. Matchmark the Pitman arm and shaft, then remove the Pitman arm with a puller, such as J-6632-01 or equivalent.
7. Remove the mounting bolts and the gear.

To install:

8. Position the gear on the frame and install the mounting bolts. Torque the gear-to-frame bolts to 65–78 ft. lbs. (88–108 Nm).
9. Install the Pitman arm. Torque the Pitman arm nut to 185 ft. lbs. (251 Nm) and stake it in two places.
10. Install the front stabilizer bar. Torque the stabilizer bar-to-frame bolts to 55 ft. lbs. (75 Nm). Torque the stabilizer bar-to-link bolts to 27 ft. lbs. (37 Nm).
11. Connect the center link to the Pitman arm. Torque the center link-to-Pitman arm nut to 55 ft. lbs. (75 Nm).
12. Install the intermediate shaft-to-wormshaft coupling clamp bolt. Torque the bolt to 33 ft. lbs. (45 Nm).

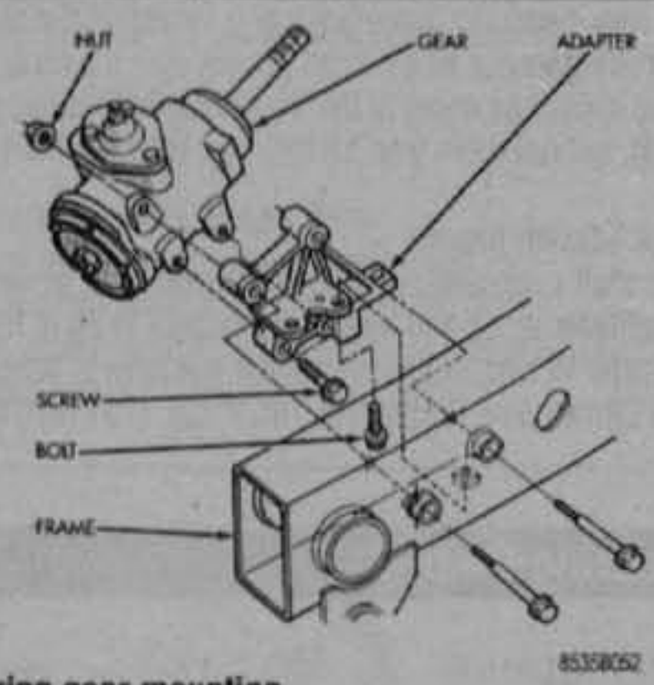

Fig. 46 Steering gear mounting

ADJUSTMENT

▶ See Figure 47

⚠ WARNING

Adjustments must be made in the order given. Failure to following sequence could result in damage to the gear.

Worm Bearing Preload

1. Check that the steering gear mounting bolts are properly torqued.
2. If necessary, remove the front stabilizer bar.
3. Matchmark and remove the Pitman arm.

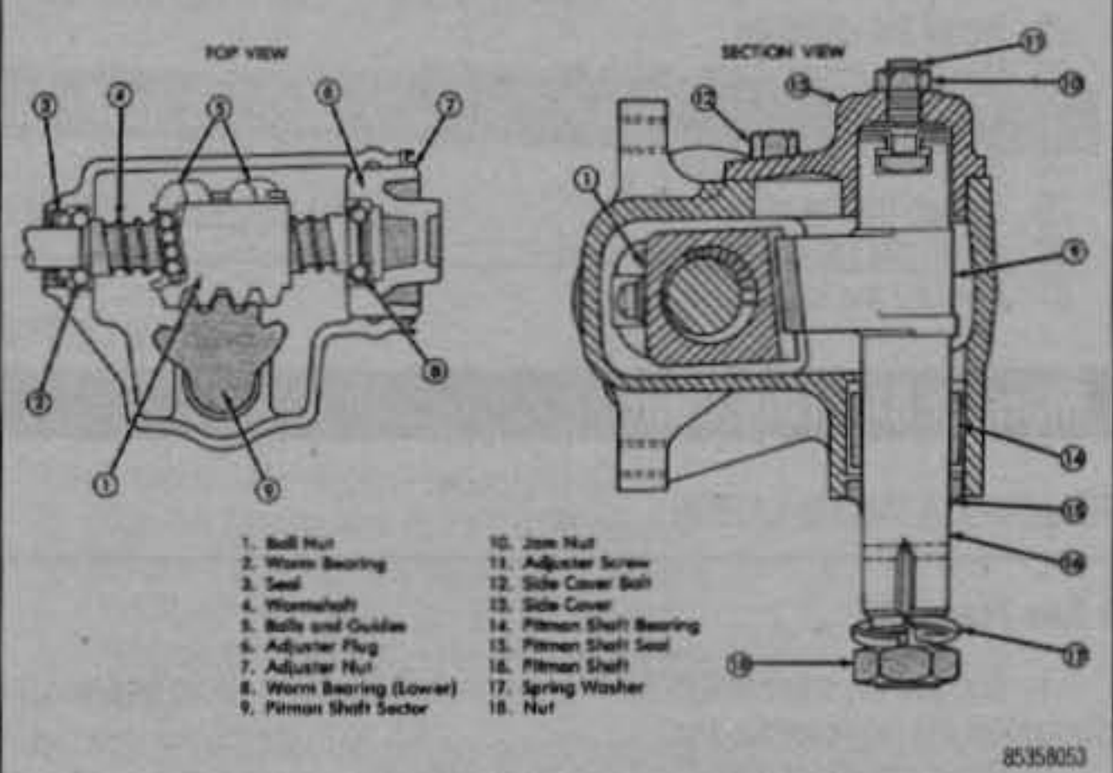

Fig. 47 Cross-sectional view of a common manual steering gear

4. Remove the horn button and cover. Attach an inch-pound torque wrench and socket to steering wheel nut, then turn the shaft to the extreme right or left, gently, until you hit the stop. Rotate it back from the stop ½ turn.

5. Turn the torque wrench through a 90° arc and check the torque reading. Torque should be 5–8 inch lbs. If not, proceed with Steps 4 and 5.

6. Loosen the adjuster locknut. Tighten the worm bearing adjuster until the torque wrench shows 5–8 inch lbs. within ½ turn of either extreme.

7. Tighten the adjuster locknut to 50 ft. lbs. (68 Nm) and recheck the torque reading on the shaft.

Pitman Shaft Overcenter

1. With the Pitman shaft removed, rotate the wormshaft from stop-to-stop and count the number of turns.

2. Rotate the wormshaft back from the stop, ½ the total number of turns.

3. Install an inch-pound torque wrench and socket on the steering wheel nut. Check the rotating torque as the shaft passes over the center point of travel. Overcenter torque should be equal to the worm bearing preload plus 4–10 inch lbs. (0.5–1.0 Nm), but not more than 18 inch lbs. (2 Nm). If not, proceed with steps 4–6.

4. Loosen the adjuster locknut.

5. Rotate the shaft over center and tighten the adjuster as necessary.

6. Hold the adjuster screw and tighten the locknut to 25 ft. lbs. (34 Nm). Do not allow the adjuster to turn, or the adjustment will have to be made over again!

7. Install the Pitman arm, torque it to 185 ft. lbs. (251 Nm) and stake it in two places.

Power Steering Gear

REMOVAL & INSTALLATION

1987–91 Vehicles

See Figure 46

1. Place the wheels in a straight-ahead position.

2. Place a drain pan under the steering gear.

3. Disconnect the hoses at the gear. Secure the hose ends in an upward position, higher than the gear. Cap the open ends.

4. Disconnect the intermediate shaft from the steering gear shaft.

5. Raise and support the front end on jackstands.

6. Matchmark the Pitman arm and shaft.

7. Disconnect the center link from the Pitman arm.

8. Remove the stabilizer bar.

9. Remove the Pitman arm nut and washer. Using a puller, remove the Pitman arm.

10. Remove the mounting bolts and remove the gear.

To install:

11. Position the gear and install the mounting bolts. Torque the steering gear-to-frame bolts to 65–78 ft. lbs. (88–108 Nm).

12. Install the Pitman arm, nut, and washer. Torque the Pitman arm nut to 185 ft. lbs. (251 Nm).

13. Install the stabilizer bar. Torque the stabilizer bar-to-frame bolts to 30 ft. lbs. (41 Nm); the stabilizer bar-to-link nuts to 45 ft. lbs. (61 Nm).

14. Connect the center link to the Pitman arm. Torque the center link-to-Pitman arm nuts to 35 ft. lbs. (47 Nm).

15. Connect the intermediate shaft to the steering gear shaft. Torque the intermediate shaft pinch bolt to 33 ft. lbs. (45 Nm)

16. Connect the hoses at the gear.

1992–95 Vehicles

See Figure 46

1. Place the wheels in the straight-ahead position.

2. Disconnect and cap the power steering lines from the steering gear.

3. Remove the column coupler shaft from the gear.

4. Matchmark the Pitman arm to the gear and remove the Pitman arm.

5. Remove the steering gear retaining bolts and remove the gear.

To install:

6. Align the column coupler shaft to the steering gear.

7. Position the steering gear and bracket on the frame rail and install the bolts. Torque the bolts to 78 ft. lbs. (105 Nm).

8. Align and install the Pitman arm.

9. Connect the power steering lines.

10. Fill the power steering reservoir to the proper level with fluid and bleed the system.

ADJUSTMENT

➡The gear must be adjusted off the vehicle. All adjustments must be made in the sequence described below. Worm bearing preload is always adjusted first!

Worm Bearing Preload

See Figures 48, 49, 50 and 51

1. Mount the gear assembly in a vise.

2. Torque the adjuster plug to 20 ft. lbs. (27 Nm).

3. Mark the gear housing in line with one of the adjuster plug holes.

4. Measure counterclockwise 3/16–¼ in. (5–6mm) and make another mark.

5. Turn the adjuster plug counterclockwise to align the hole with the second mark.

6. Hold the adjuster plug and torque the locknut to 85 ft. lbs. (115 Nm). Do not allow the adjuster to turn.

7. Rotate the stub shaft clockwise to its stop, then back ¼ turn.

8. Using a torque wrench of no more than 50 inch lbs. (6 Nm) capacity and a 12-point deep socket, check the rotating torque at the splined end of the stub shaft at or near a vertical position. Torque should be 4–10 inch lbs. (0.5–1.0 Nm).

9. If the torque cannot be adjusted within these limits, the gear will have to be rebuilt.

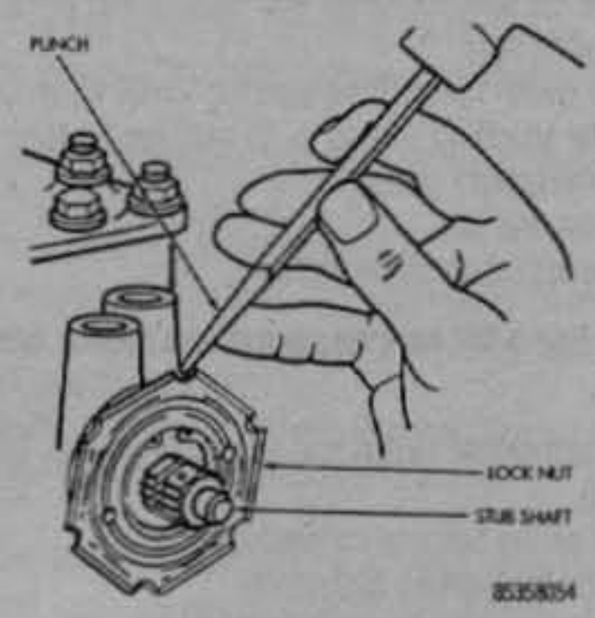

Fig. 48 Loosen the adjuster locknut on the gear by driving it counterclockwise

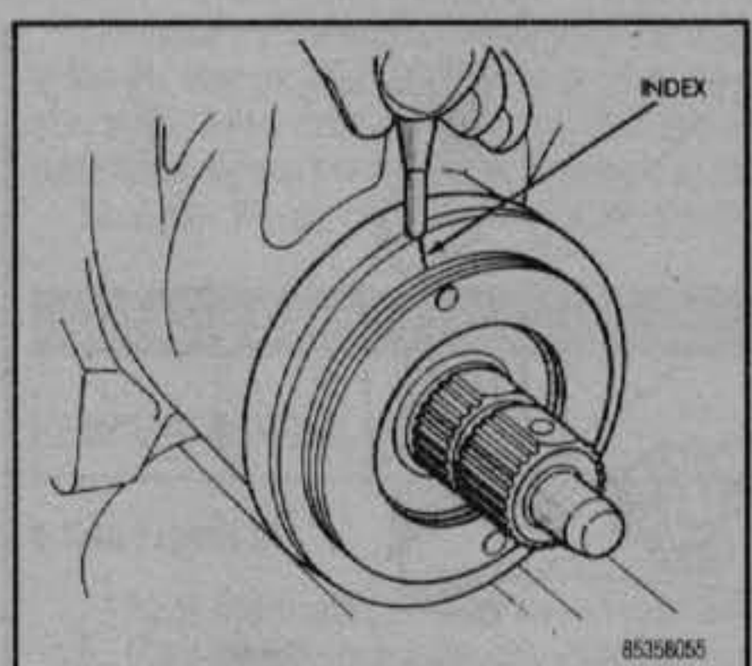

Fig. 49 Matchmark the housing to the adjuster plug hole

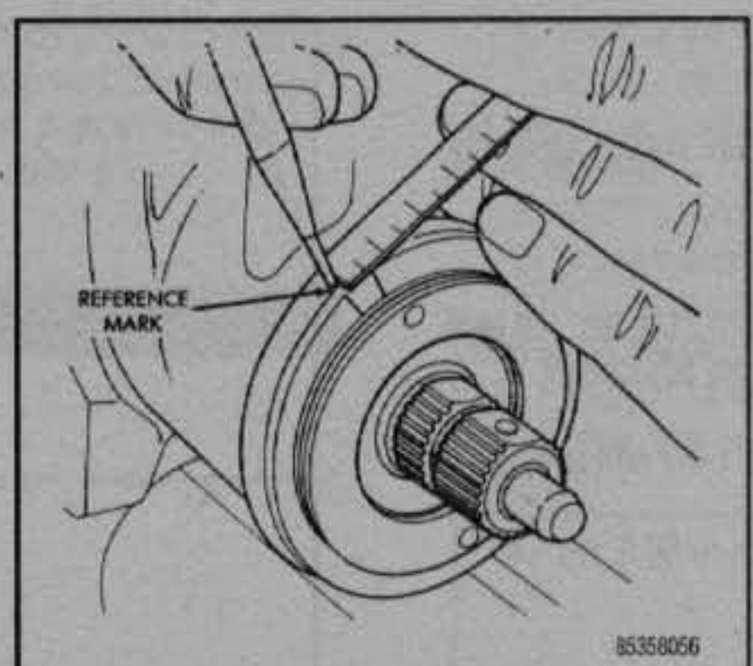

Fig. 50 Measure back (counterclockwise) and scribe a second mark

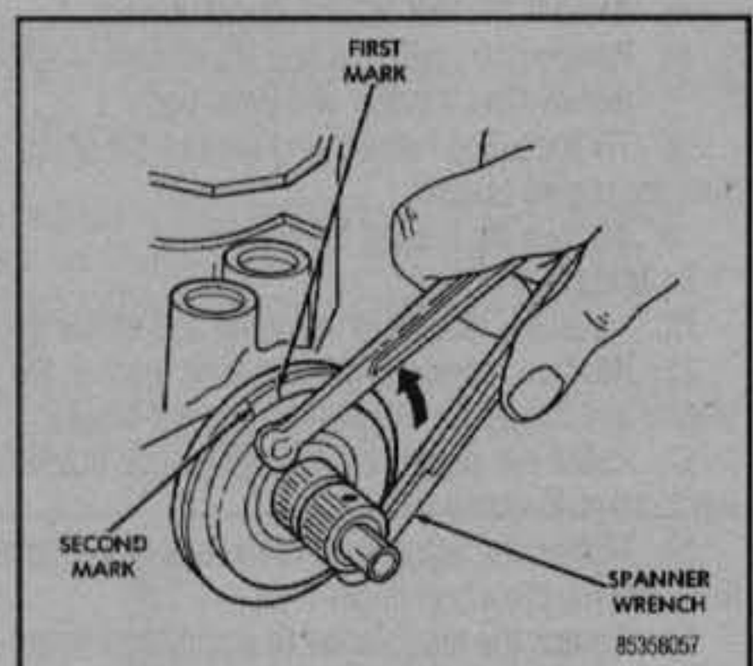

Fig. 51 Use a spanner wrench to align the adjuster plug with the second mark

Pitman Shaft Overcenter

See Figures 52 and 53

1. Loosen the adjuster screw locknut.
2. Turn the adjuster screw counterclockwise until the screw is fully extended. Turn the screw back in one full turn.
3. Count the number of turns to rotate the stub shaft from stop-to-stop.
4. Rotate the shaft back ½ the number of turns. At this point the flat surface of the stub shaft should be upward and the master spline on the Pitman shaft should be aligned with the adjuster screw.
5. Install a 50 inch lbs. (6 Nm) torque wrench and deep 12-point socket on the splined end of the stub shaft. Place the torque wrench in a vertical position.
6. Rotate the torque wrench 45 degrees to each side and record the highest torque at or near center. Record this reading.
7. Adjust the torque by turning the adjuster screw clockwise:
   a. Adjustment for 1987–91 vehicles is: the recorded reading plus 4–8 inch lbs. (0.5–0.9 Nm) for new gears or the previously recorded reading plus 4–5 inch lbs. (0.5–0.6 Nm) for used gears. BUT, on both either new or used gears, DO NOT exceed 18 inch lbs. (2 Nm) for a combined total adjustment.
   b. Adjustment for 1992–95 vehicles is the recorded reading plus 6–10 inch lbs. (0.7–1.0 Nm).
8. Tighten the adjuster screw locknut to 20 ft. lbs. (27 Nm) while holding the adjuster screw for 1987–92 vehicles. Tighten the jam nut to 36 ft. lbs. (49 Nm) for 1993–95 vehicles.
9. Install the gear.

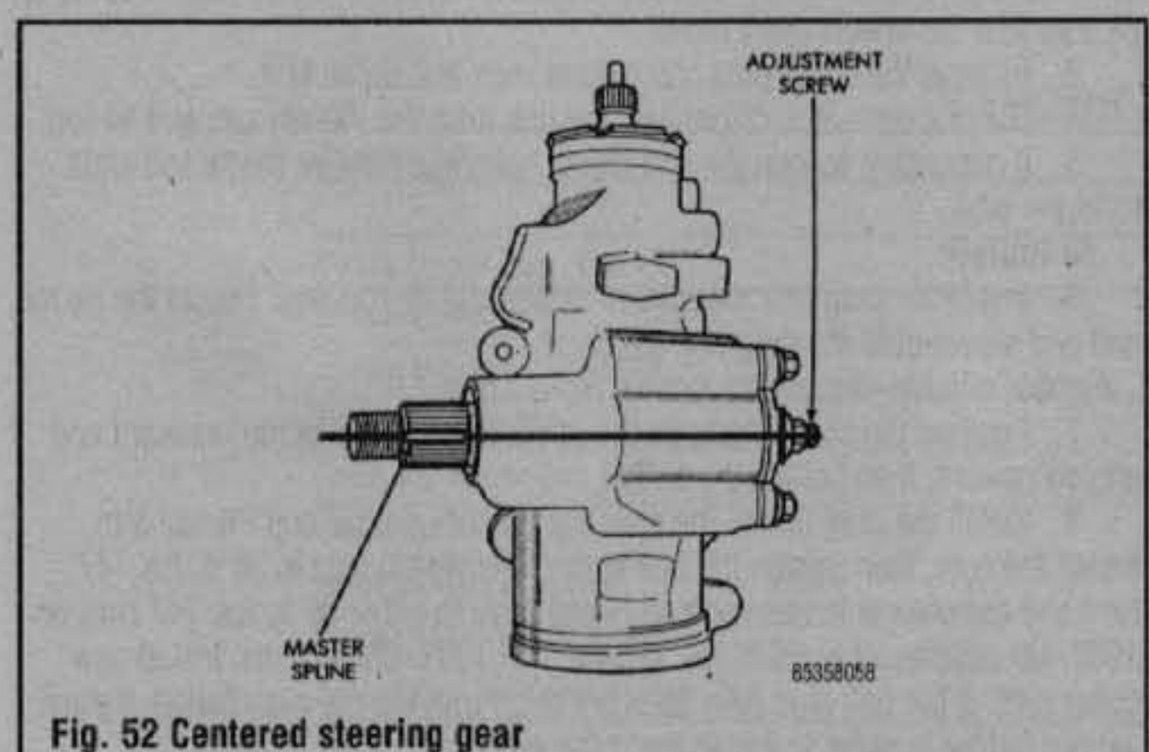

Fig. 52 Centered steering gear

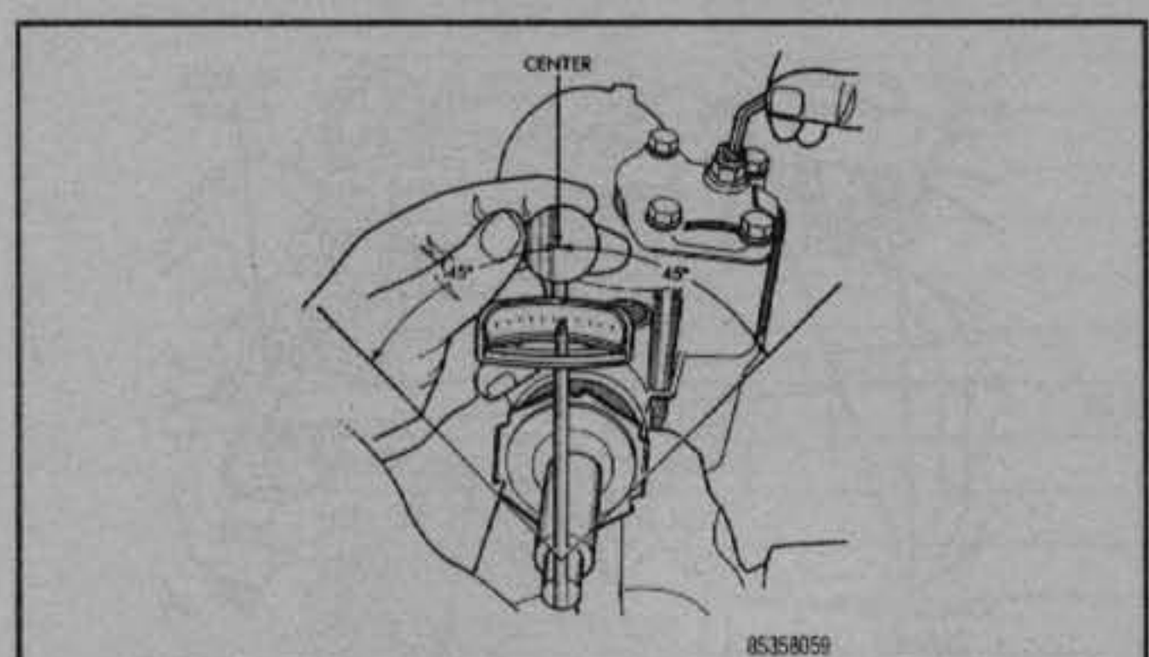

Fig. 53 Check the overcenter rotational torque with an inch lbs. wrench

Power Steering Pump

REMOVAL & INSTALLATION

See Figure 54

➡If the power steering pump has to be removed to service another component, it is usually not necessary to remove the hoses from the pump. Just disconnect the mounting fixtures, lift the pump away from the engine and position it out of the way. The hoses must be removed from the power steering pump only when the pump is being completely removed from the vehicle for service or replacement.

With Serpentine Drive Belt

1. Disconnect the negative battery cable.
2. Loosen and remove the serpentine drive belt.
3. Place a drain pan under the power steering pump.
4. Clamp the power steering pump pressure and return fluid lines, then disconnect the lines from the hose from the pump.

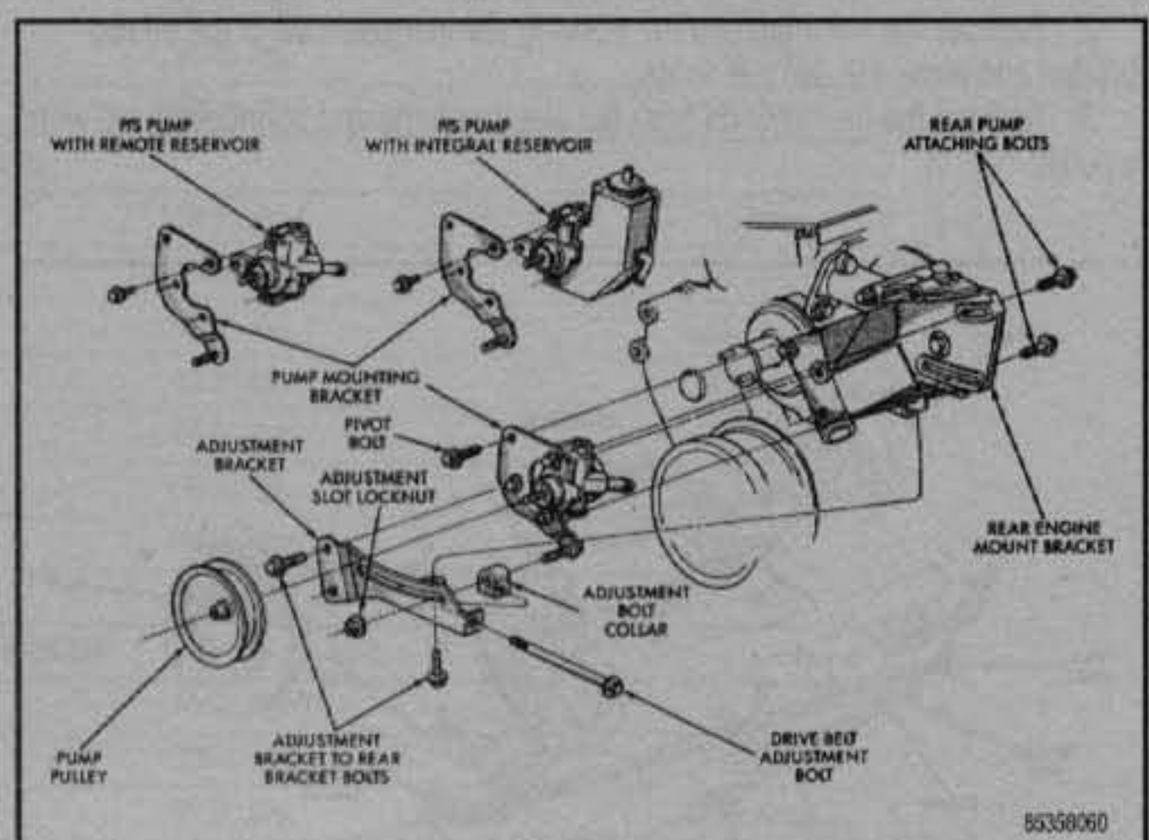

Fig. 54 Power steering pump and brackets—1991–95 vehicles shown

5. Remove the rear bracket-to-pump bolts.
6. Remove the lower nut and adjustment bracket.
7. Remove the adjuster and pivot bolts.
8. Tilt the pump forward and remove the pump and front bracket assembly from the engine bracket.
9. Remove the bracket from the pump.

To install:

10. Install the bracket to the pump and torque the bolts to 21 ft. lbs. (28 Nm).
11. Position the pump with the front bracket, the adjacent adjustment bracket and the pulley, adjacent to the rear bracket.
12. Install the adjustment bracket-to-rear bracket bolts, pivot bolt and, the rear bracket-to-pump bolts.
13. Tighten the adjustment bracket-to-rear bracket bolts to 30 ft. lbs. (40 Nm), and the pivot bolt finger-tight.
14. Tighten the rear bracket to pump bolts finger-tight.
15. Install the serpentine belt.
16. Connect the power steering lines and remove the clamps.
17. Fill the pump reservoir to the proper level with fluid.
18. Connect the negative battery cable.
19. Bleed the system.

With V-Type Drive Belt

1. Disconnect the negative battery cable.
2. Remove the drive belt.
3. Remove the air cleaner.
4. Disconnect the hoses at the pump and cap the hose ends.
5. Remove the front bracket-to-engine bolts.
6. Support the pump and remove the pump-to-rear bracket nuts.
7. Lift out the pump.

To install:

8. Position the pump in the rear mounting bracket, install the retaining bolts and nuts, then tighten to 20 ft. lbs. (27 Nm).
9. Install the front bracket-to-engine bolts and tighten to 20 ft. lbs. (27 Nm).
10. Connect the hoses.
11. Install the air cleaner.
12. Install the drive belt.
13. Connect the negative battery cable.
14. Bleed the system.

Tie Rod End

REMOVAL & INSTALLATION

See Figures 55 and 56

1. Remove the cotter pins and retaining nuts at both ends of the tie rod and from the end of the connecting rod where it attaches to the tie rod.
2. Remove the nut attaching the steering damper pushrod to the tie rod bracket and move the damper aside.
3. Remove the tie rod ends from the steering arms and connecting rod with a puller.

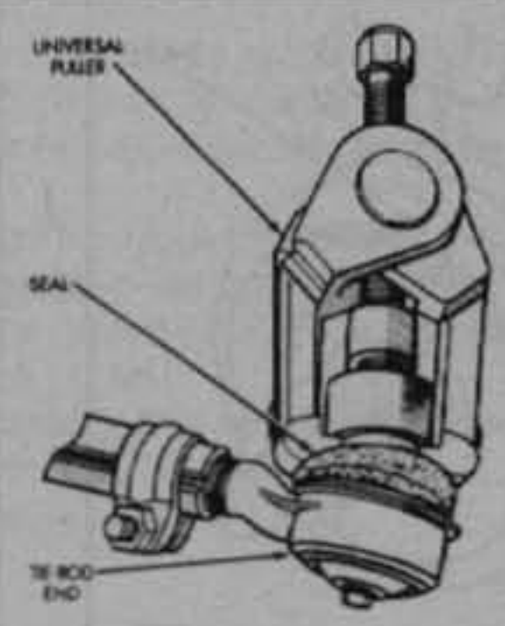

Fig. 56 Remove the tie rod ends from the steering arms and connecting rod with a puller

4. Count the number of threads showing on the tie rod before removing the ends, as a guide to installation.
5. Loosen the adjusting tube clamp bolts and unthread the ends.
6. Installation is the reverse of removal. Torque the steering damper-to-tie rod nut and the ball stud-to-drag link to 55 ft. lbs. (75 Nm); ball stud nut-to-the steering knuckle to 35 ft. lbs. (47 Nm).
7. Adjust toe-in, if necessary.

Center Link/Connecting Rod/Drag Link

REMOVAL & INSTALLATION

See Figures 55 and 57

1. Raise and support the front end on jackstands
2. Place the wheels in the straight-ahead position with the Pitman arm parallel with the vehicle centerline. Matchmark the Pitman arm and gear housing to be sure that the wheels don't move.
3. Remove the cotter pins and nuts at each end of the link.
4. Using a separator, disconnect the link from the Pitman arm and tie rod.
5. If necessary, loosen the end clamp bolts and remove the tie rod ends from the tube.

To install:

6. Install the drag link adjustment sleeve and tie rod end. Thread the tie rod end and sleeve onto the drag link the same number of turns required to remove the old ones.
7. Position the clamp bolts so the threaded ends are facing rearward and angled upward, then tighten the bolts.
8. Install the drag link to the steering knuckle, tie rod and Pitman arm. Install the nuts, then tighten the one at the steering knuckle to 35 ft. lbs. (47 Nm) and the ones at the tie rod and Pitman arm to either 35 ft. lbs. (47 Nm) on 1987–90 vehicles or to 55 ft. lbs. (75 Nm) on 1991–95 vehicles. Install new cotter pins. If the ball stud hole does not align with the nut castellation, tighten the nut further in order to install the cotter pin.

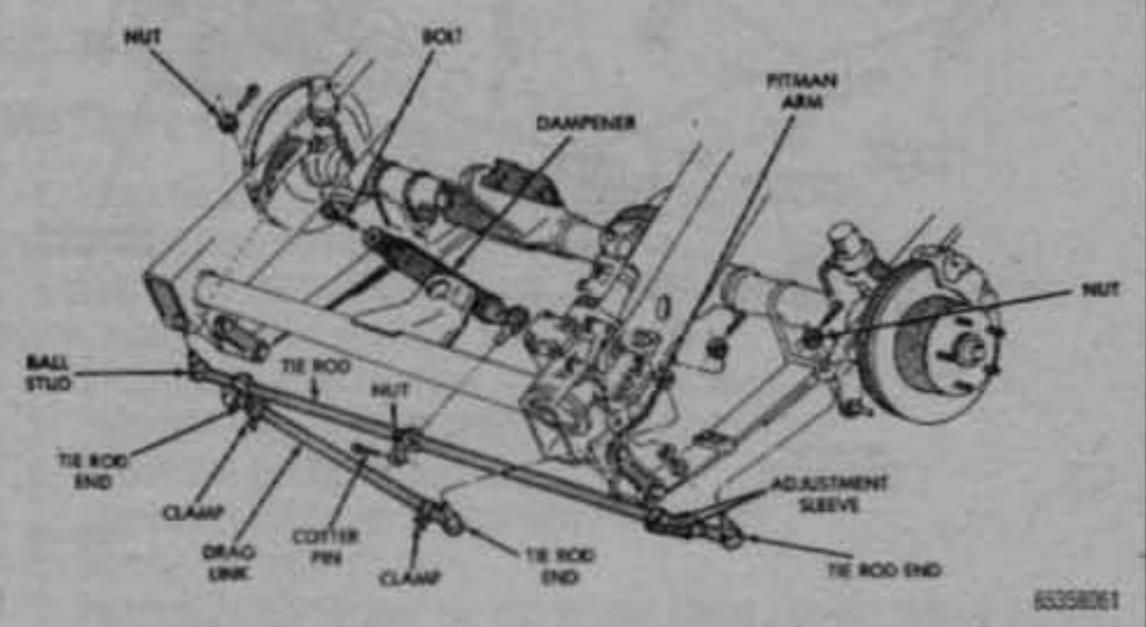

Fig. 55 Steering linkage

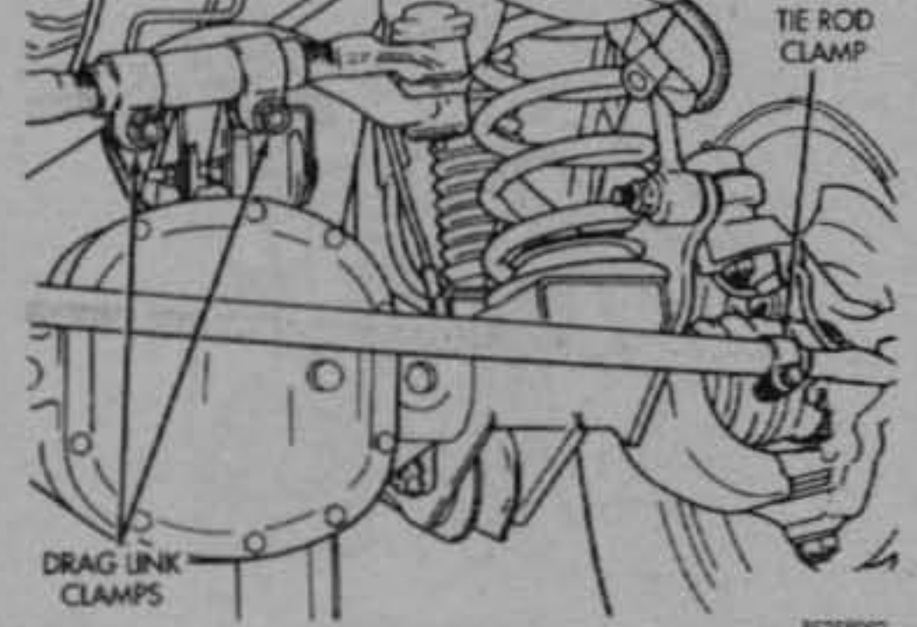

Fig. 57 Rod/drag link clamp bolts

9. Install the steering dampener onto the drag link and tighten the nut to 35 ft. lbs. (47 Nm) on 1987–90 vehicles or 55 ft. lbs. (75 Nm) on 1991–95 vehicles. Install a new cotter pin. If the ball stud hole does not align with the nut castellation, tighten the nut further in order to install the cotter pin.
10. Lower the vehicle and check the toe adjustment.

Steering Damper

REMOVAL & INSTALLATION

See Figure 55

1. Raise and support the front end on jackstands.
2. Place the wheels in a straight-ahead position.
3. Remove the attaching nut at each end of the damper and remove the damper.
4. Install the damper, making sure that the wheels are still in the straight-ahead position. Torque the nuts as follows:
   - Tie rod end: 55 ft. lbs. (74 Nm)
   - Axle end: 55 ft. lbs. (74 Nm)

Pitman Arm

REMOVAL & INSTALLATION

See Figures 55 and 58

1. Raise and support the front end on jackstands.
2. Place the wheels in a straight-ahead position.
3. Matchmark the Pitman arm and gear housing.
4. Disconnect the connecting rod/drag link from the arm.
5. Matchmark the Pitman arm and shaft.
6. Remove the Pitman arm nut and washer.
7. Using a puller, remove the Pitman arm from the gear. Never hammer on the arm or use a wedge tool to remove it!

To install:

8. Install the Pitman arm aligning the matchmarks on the arm and shaft.
9. Install the washer and nut. Torque the nut to 185 ft. lbs. (251 Nm).
10. Connect the connecting rod/drag link, or knuckle, to the Pitman arm. Observe the following torques:
    - Pitman arm-to-knuckle nut: 55 ft. lbs. (74 Nm)
    - Pitman arm-to-drag link nut: 35 ft. lbs. (47 Nm)

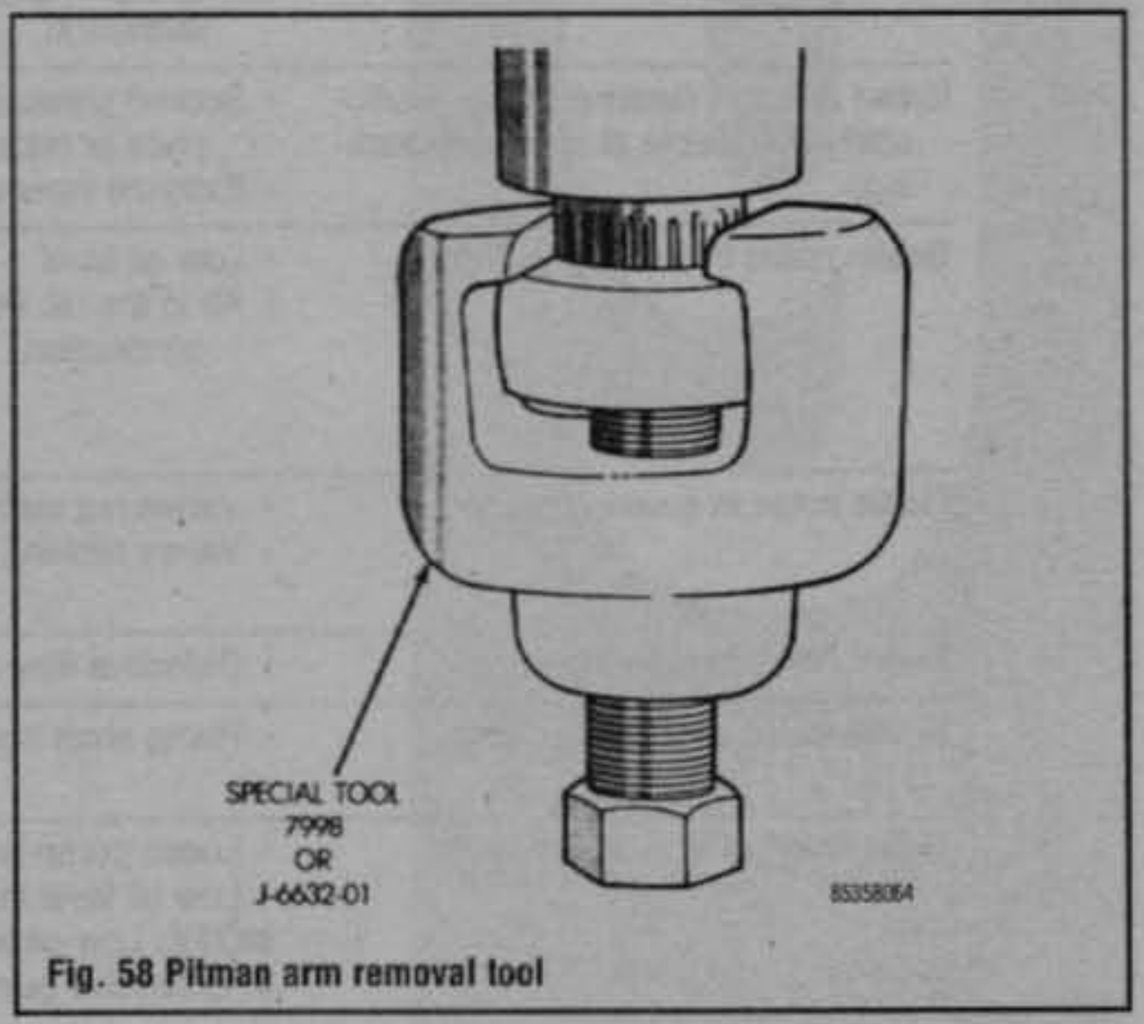

Fig. 58 Pitman arm removal tool

TORQUE SPECIFICATIONS

Component	U.S.	Metric
FRONT SUSPENSION		
Shock Upper Nut 9 ft. lbs.	9 ft. lbs.	13 Nm
Shock Lower Bolt	45 ft. lbs.	61 Nm
Spring Bracket U-Bolt Nut	90 ft. lbs.	122 Nm
Track Bar Axle Nut	74 ft. lbs.	100 Nm
Track Bar Frame Nut Bolt	125 ft. lbs.	168 Nm
Stabilizer Bar To Frame	55 ft. lbs.	75 Nm
Stabilizer Bar Link Bolt	45 ft. lbs.	61 Nm
Spring Eye Shackle To Bolt	95 ft. lbs.	129 Nm
Spring Eye To Frame Bracket Bolt	105 ft. lbs.	142 Nm
STEERING		
Adjustment Sleeve Clamp Bolt	34 ft. lbs.	42 Nm
Link End To Tie Rod Nut	70 ft. lbs.	95 Nm
Link End To Pitnam Arm Nut	60 ft. lbs.	81 Nm
Tie Rod To Steering Knuckle Nut	35 ft. lbs.	47 Nm
Drag Link To Pitnam Arm Nut	60 ft. lbs.	81 Nm
Tie Rod To Drag Link Nut	55 ft. lbs.	75 Nm
Pitman Arm Shaft Nut	185 ft. lbs.	251 Nm
Tie Rod Clamp Bolt	25 ft. lbs.	34 Nm
REAR SUSPENSION		
Shock Upper And Lower Nut/Bolt	44 ft. lbs.	60 Nm
Track Bar Frame And Axle Bolt	125 ft. lbs.	168 Nm
Spring U-Bolt Nut	90 ft. lbs.	122 Nm
Spring Eye Shackle To Bolt	95 ft. lbs.	129 Nm
Spring Eye To Frame Bracket Bolt	105 ft. lbs.	142 Nm

85358C02

Troubleshooting the Power Steering Pump

Problem	Cause	Solution
Chirp noise in steering pump	• Loose belt	• Adjust belt tension to specification
Belt squeal (particularly noticeable at full wheel travel and stand still parking)	• Loose belt	• Adjust belt tension to specification
Growl noise in steering pump	• Excessive back pressure in hoses or steering gear caused by restriction	• Locate restriction and correct. Replace part if necessary.
Growl noise in steering pump (particularly noticeable at stand still parking)	• Scored pressure plates, thrust plate or rotor • Extreme wear of cam ring	• Replace parts and flush system • Replace parts
Groan noise in steering pump	• Low oil level • Air in the oil. Poor pressure hose connection.	• Fill reservoir to proper level • Tighten connector to specified torque. Bleed system by operating steering from right to left—full turn.
Rattle noise in steering pump	• Vanes not installed properly • Vanes sticking in rotor slots	• Install properly • Free up by removing burrs, varnish, or dirt
Swish noise in steering pump	• Defective flow control valve	• Replace part
Whine noise in steering pump	• Pump shaft bearing scored	• Replace housing and shaft. Flush system.
Hard steering or lack of assist	• Loose pump belt • Low oil level in reservoir **NOTE:** Low oil level will also result in excessive pump noise • Steering gear to column misalignment • Lower coupling flange rubbing against steering gear adjuster plug • Tires not properly inflated	• Adjust belt tension to specification • Fill to proper level. If excessively low, check all lines and joints for evidence of external leakage. Tighten loose connectors. • Align steering column • Loosen pinch bolt and assemble properly • Inflate to recommended pressure
Foaming milky power steering fluid, low fluid level and possible low pressure	• Air in the fluid, and loss of fluid due to internal pump leakage causing overflow	• Check for leaks and correct. Bleed system. Extremely cold temperatures will cause system aeriation should the oil level be low. If oil level is correct and pump still foams, remove pump from vehicle and separate reservoir from body. Check welsh plug and body for cracks. If plug is loose or body is cracked, replace body.
Low pump pressure	• Flow control valve stuck or inoperative • Pressure plate not flat against cam ring	• Remove burrs or dirt or replace. Flush system. • Correct
Momentary increase in effort when turning wheel fast to right or left	• Low oil level in pump • Pump belt slipping • High internal leakage	• Add power steering fluid as required • Tighten or replace belt • Check pump pressure. (See pressure test)
Steering wheel surges or jerks when turning with engine running especially during parking	• Low oil level • Loose pump belt • Steering linkage hitting engine oil pan at full turn • Insufficient pump pressure	• Fill as required • Adjust tension to specification • Correct clearance • Check pump pressure. (See pressure test). Replace flow control valve if defective.

909ABC02

BRAKE OPERATING SYSTEM 9-2
BASIC OPERATING PRINCIPLES 9-2
DISC BRAKES 9-2
DRUM BRAKES 9-2
ADJUSTMENTS 9-3
DRUM BRAKES 9-3
BRAKE PEDAL FREE-PLAY 9-3
BRAKE LIGHT SWITCH 9-3
REPLACEMENT 9-3
ADJUSTMENT 9-3
MASTER CYLINDER 9-3
REMOVAL & INSTALLATION 9-3
OVERHAUL 9-3
POWER BRAKE BOOSTER 9-5
REMOVAL & INSTALLATION 9-5
COMBINATION/PROPORTIONING VALVE 9-5
REMOVAL & INSTALLATION 9-5
BRAKE HOSES AND LINES 9-5
INSPECTION 9-5
REMOVAL & INSTALLATION 9-6
BLEEDING BRAKE SYSTEM 9-6
FRONT DISC BRAKES 9-6
BRAKE PADS 9-6
REMOVAL & INSTALLATION 9-6
BRAKE CALIPER 9-8
REMOVAL & INSTALLATION 9-8
OVERHAUL 9-10
BRAKE DISC (ROTOR) 9-11
REMOVAL & INSTALLATION 9-11
INSPECTION AND MEASUREMENT 9-11
REAR DRUM BRAKES 9-12
BRAKE DRUMS 9-12
REMOVAL & INSTALLATION 9-12
INSPECTION 9-12
BRAKE SHOES 9-12
REMOVAL & INSTALLATION 9-12
WHEEL CYLINDERS 9-14
OVERHAUL 9-14
PARKING BRAKE 9-15
CABLES 9-15
REMOVAL & INSTALLATION 9-15
ADJUSTMENT 9-16
ANTI-LOCK BRAKE SYSTEM 9-17
DESCRIPTION AND OPERATION 9-17
DIAGNOSTIC PROCEDURES 9-17
FRONT WHEEL SENSOR 9-18
REMOVAL & INSTALLATION 9-18
REAR WHEEL SENSOR 9-18
REMOVAL & INSTALLATION 9-18
ELECTRONIC CONTROL UNIT (ECU) 9-19
REMOVAL & INSTALLATION 9-19
HYDRAULIC CONTROL UNIT (HCU) 9-19
REMOVAL & INSTALLATION 9-19
MASTER CYLINDER 9-20
REMOVAL & INSTALLATION 9-20
POWER BRAKE BOOSTER 9-20
REMOVAL & INSTALLATION 9-20
COMBINATION VALVE 9-20
REMOVAL & INSTALLATION 9-20
ABS BLEEDING 9-21
SPECIFICATION CHARTS
BRAKE SPECIFICATIONS 9-21
TORQUE SPECIFICATIONS 9-22

9

BRAKES

BRAKE OPERATING SYSTEM 9-2
FRONT DISC BRAKES 9-6
REAR DRUM BRAKES 9-12
PARKING BRAKE 9-15
ANTI-LOCK BRAKE SYSTEM 9-17

BRAKE OPERATING SYSTEM

Basic Operating Principles

Hydraulic systems are used to actuate the brakes of all modern automobiles. The system transports the power required to force the frictional surfaces of the braking system together from the pedal to the individual brake units at each wheel. A hydraulic system is used for two reasons.

First, fluid under pressure can be carried to all parts of an automobile by small pipes and flexible hoses without taking up a significant amount of room or posing routing problems.

Second, a great mechanical advantage can be given to the brake pedal end of the system, and the foot pressure required to actuate the brakes can be reduced by making the surface area of the master cylinder pistons smaller than that of any of the pistons in the wheel cylinders or calipers.

The master cylinder consists of a fluid reservoir along with a double cylinder and piston assembly. Double type master cylinders are designed to separate the front and rear braking systems hydraulically in case of a leak. The master cylinder coverts mechanical motion from the pedal into hydraulic pressure within the lines. This pressure is translated back into mechanical motion at the wheels by either the wheel cylinder (drum brakes) or the caliper (disc brakes).

Steel lines carry the brake fluid to a point on the vehicle's frame near each of the vehicle's wheels. The fluid is then carried to the calipers and wheel cylinders by flexible tubes in order to allow for suspension and steering movements.

In drum brake systems, each wheel cylinder contains two pistons, one at either end, which push outward in opposite directions and force the brake shoe into contact with the drum.

In disc brake systems, the cylinders are part of the calipers. At least one cylinder in each caliper is used to force the brake pads against the disc.

All pistons employ some type of seal, usually made of rubber, to minimize fluid leakage. A rubber dust boot seals the outer end of the cylinder against dust and dirt. The boot fits around the outer end of the piston on disc brake calipers, and around the brake actuating rod on wheel cylinders.

The hydraulic system operates as follows: When at rest, the entire system, from the piston(s) in the master cylinder to those in the wheel cylinders or calipers, is full of brake fluid. Upon application of the brake pedal, fluid trapped in front of the master cylinder piston(s) is forced through the lines to the wheel cylinders. Here, it forces the pistons outward, in the case of drum brakes, and inward toward the disc, in the case of disc brakes. The motion of the pistons is opposed by return springs mounted outside the cylinders in drum brakes, and by spring seals, in disc brakes.

Upon release of the brake pedal, a spring located inside the master cylinder immediately returns the master cylinder pistons to the normal position. The pistons contain check valves and the master cylinder has compensating ports drilled in it. These are uncovered as the pistons reach their normal position. The piston check valves allow fluid to flow toward the wheel cylinders or calipers as the pistons withdraw. Then, as the return springs force the brake pads or shoes into the released position, the excess fluid reservoir through the compensating ports. It is during the time the pedal is in the released position that any fluid that has leaked out of the system will be replaced through the compensating ports.

Dual circuit master cylinders employ two pistons, located one behind the other, in the same cylinder. The primary piston is actuated directly by mechanical linkage from the brake pedal through the power booster. The secondary piston is actuated by fluid trapped between the two pistons. If a leak develops in front of the secondary piston, it moves forward until it bottoms against the front of the master cylinder, and the fluid trapped between the pistons will operate the rear brakes. If the rear brakes develop a leak, the primary piston will move forward until direct contact with the secondary piston takes place, and it will force the secondary piston to actuate the front brakes. In either case, the brake pedal moves farther when the brakes are applied, and less braking power is available.

All dual circuit systems use a switch to warn the driver when only half of the brake system is operational. This switch is usually located in a valve body which is mounted on the firewall or the frame below the master cylinder. A hydraulic piston receives pressure from both circuits, each circuit's pressure being applied to one end of the piston. When the pressures are in balance, the piston remains stationary. When one circuit has a leak, however, the greater pressure in that circuit during application of the brakes will push the piston to one side, closing the switch and activating the brake warning light.

In disc brake systems, this valve body also contains a metering valve and, in some cases, a proportioning valve. The metering valve keeps pressure from traveling to the disc brakes on the front wheels until the brake shoes on the rear wheels have contacted the drums, ensuring that the front brakes will never be used alone. The proportioning valve controls the pressure to the rear brakes to lessen the chance of rear wheel lock-up during very hard braking.

Warning lights may be tested by depressing the brake pedal and holding it while opening one of the wheel cylinder bleeder screws. If this does not cause the light to go on, substitute a new lamp, make continuity checks, and, finally, replace the switch as necessary.

The hydraulic system may be checked for leaks by applying pressure to the pedal gradually and steadily. If the pedal sinks very slowly to the floor, the system has a leak. This is not to be confused with a springy or spongy feel due to the compression of air within the lines. If the system leaks, there will be a gradual change in the position of the pedal with a constant pressure.

Check for leaks along all lines and at wheel cylinders. If no external leaks are apparent, the problem is inside the master cylinder.

DISC BRAKES

Instead of the traditional expanding brakes that press outward against a circular drum, disc brake systems utilize a disc (rotor) with brake pads positioned on either side of it. An easily-seen analogy is the hand brake arrangement on a bicycle. The pads squeeze onto the rim of the bike wheel, slowing its motion. Automobile disc brakes use the identical principle but apply the braking effort to a separate disc instead of the wheel.

The disc (rotor) is a casting, usually equipped with cooling fins between the two braking surfaces. This enables air to circulate between the braking surfaces making them less sensitive to heat buildup and more resistant to fade. Dirt and water do not drastically affect braking action since contaminants are thrown off by the centrifugal action of the rotor or scraped off the by the pads. Also, the equal clamping action of the two brake pads tends to ensure uniform, straight line stops. Disc brakes are inherently self-adjusting. There are three general types of disc brake:

1. A fixed caliper.
2. A floating caliper.
3. A sliding caliper.

The fixed caliper design uses two pistons mounted on either side of the rotor (in each side of the caliper). The caliper is mounted rigidly and does not move.

The sliding and floating designs are quite similar. In fact, these two types are often lumped together. In both designs, the pad on the inside of the rotor is moved into contact with the rotor by hydraulic force. The caliper, which is not held in a fixed position, moves slightly, bringing the outside pad into contact with the rotor. There are various methods of attaching floating calipers. Some pivot at the bottom or top, and some slide on mounting bolts. In any event, the end result is the same.

DRUM BRAKES

Drum brakes employ two brake shoes mounted on a stationary backing plate. These shoes are positioned inside a circular drum which rotates with the wheel assembly. The shoes are held in place by springs. This allows them to slide toward the drums (when they are applied) while keeping the linings and drums in alignment. The shoes are actuated by a wheel cylinder which is mounted at the top of the backing plate. When the brakes are applied, hydraulic pressure forces the wheel cylinder's actuating links outward. Since these links bear directly against the top of the brake shoes, the tops of the shoes are then forced against the inner side of the drum. This action forces the bottoms of the two shoes to contact the brake drum by rotating the entire assembly slightly (known as servo action). When pressure within the wheel cylinder is relaxed, return springs pull the shoes back away from the drum.

Most modern drum brakes are designed to self-adjust themselves during application when the vehicle is moving in reverse. This motion causes both shoes to rotate very slightly with the drum, rocking an adjusting lever, thereby causing rotation of the adjusting screw. Some drum brake systems are designed to self-adjust during application whenever the brakes are applied. This on-board adjustment system reduces the need for maintenance adjustments and keeps both the brake function and pedal feel satisfactory.

Adjustments

DRUM BRAKES

Release the parking brake, then centralize the brake shoes in the drums by firmly depressing, then releasing the brake pedal.

Initial Brake Shoe Adjustment

See Figure 1

If the brake assemblies have been disassembled, an initial adjustment must be made before the drum is installed. It may also be necessary to back off the adjustment to remove the drums.

When the brake parts have been installed in their correct position, adjust the adjusting screw assemblies to a point where approximately 3/8 in. (9.5mm) of threads are exposed between the star wheel and the star wheel nut.

1. Raise and safely support the vehicle on jackstands.
2. Remove the access slot cover and, using a brake adjusting tool or screwdriver, rotate the star wheel until the wheel is locked and cannot be turned in the clockwise direction.
3. Back off the star wheel until the wheel rotates freely. To back off the star wheel on the brake, insert a thin screwdriver in the adjusting screw slot to hold the automatic adjusting lever away from the star wheel. Do not attempt to back off on the adjusting screw without holding the adjusting lever away from the star wheel as the adjuster will be damaged.

BRAKE PEDAL FREE-PLAY

Free-play is not adjustable; however it can be measured for compliance. The free-play should be 1/16-1/4 in. (1.6–6.4mm). If free-play does not meet this specification, check for and replace the worn or damaged parts.

Brake Light Switch

REPLACEMENT

1987–90 Vehicles

See Figure 2

The brake light switch is attached to the pedal and pushrod with a bolt.The brake light switch is not adjustable.

1. Remove the lower trim panel and ducts as necessary to gain access to the brake light switch.
2. Remove the pushrod bushings and nut.
3. Installation is the reverse of removal. Install new nuts on the rod bolt and tighten the inner nut to 25 ft. lbs. (34 Nm) and the outer nut to 75 inch lbs. (8.5 Nm).

1991–95 Vehicles

See Figure 3

The brake light switch is mounted in the pedal support bracket and is operated by the pedal. The switch is secured in the bracket with a retainer.

1. Disconnect the switch wires.
2. Thread the switch out of the retainer or rock the switch up and down and pull it rearward out of the retainer.
3. Installation is the reverse of removal. Adjust as necessary. Refer to the procedure which follows.

ADJUSTMENT

1991–95 Vehicles

1. Move the brake pedal forward by hand and check operation of switch plunger. The plunger should be fully extended when the pedal free play is taken up and the brake application begins. There should be a 1/8 inch clearance between the plunger and the pedal at this point. If the switch-to-pedal clearance is OK and the brake lights operate correctly, adjustment is not necessary.
2. If the switch plunger does not fully extend and the clearance between the pedal and the switch barrel is insufficient, adjust the switch position as follows:
   a. Grasp the brake pedal and pull it rearward as far as possible. The pedal should contact the switch barrel. Push it rearward in the retaining clip and stop it at the correct position.
   b. Verify the brake light switch operation and proper clearance between switch and brake pedal.

WARNING

Make sure the brake pedal returns to the fully released position after adjustment. The switch can interfere with full pedal return if it is too far forward, which will result in brake drag.

Master Cylinder

REMOVAL & INSTALLATION

See Figures 4, 5 and 6

The following procedure applies only to vehicles which are equipped with the standard hydraulic braking system, NOT to vehicles equipped with ABS.

For all vehicles equipped with Anti-lock Brake Systems (ABS), please refer to the master cylinder removal and installation procedure found later in the Anti-lock Brake portion of this section.

1. Disconnect and plug the brake lines.
2. Disconnect the wires from the stoplight switch.
3. Remove all attaching bolts and nuts and lift the assembly from the vehicle.

To install:

4. Position the master cylinder and install the mounting bolts. Torque the mounting bolts to 15 ft. lbs. (21 Nm).
5. Connect the brake lines and bleed the master cylinder and brake system.

OVERHAUL

See Figures 7, 8, 9, 10 and 11

1. Remove the master cylinder from the vehicle and remove the cover and diaphragm seal. Drain the brake fluid from the reservoir and mount it in a vise.

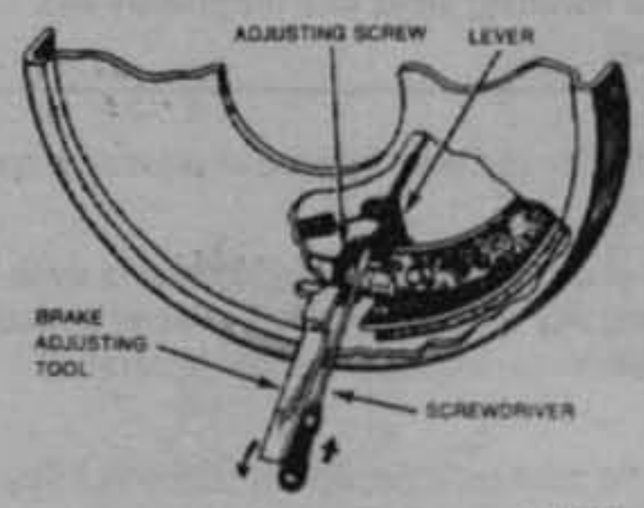

Fig. 1 For initial brake shoe adjustment, hold the adjuster away from the star wheel

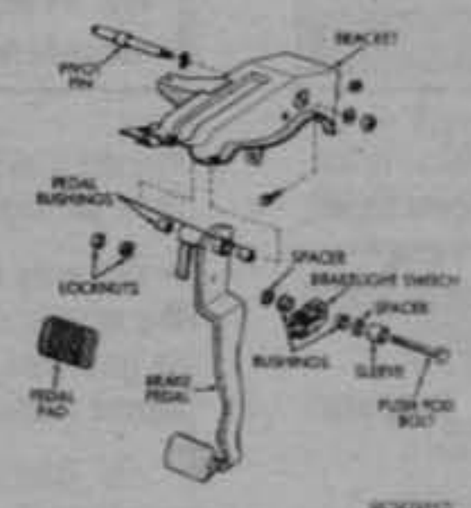

Fig. 2 Brake light switch installation—1987–90

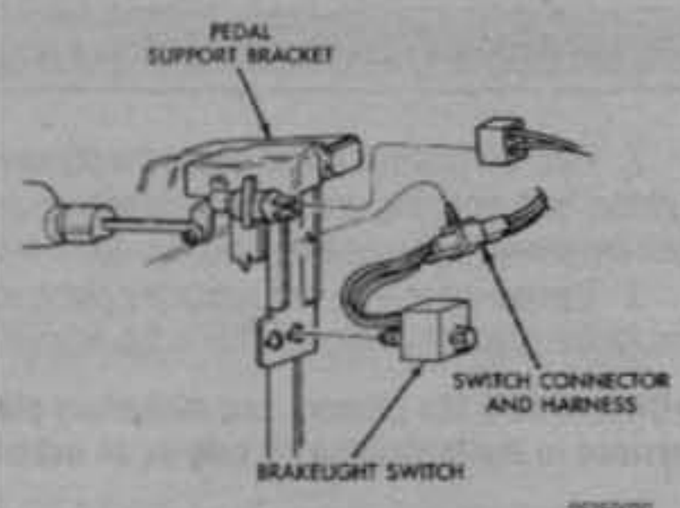

Fig. 3 Brake light switch installation—1991–95

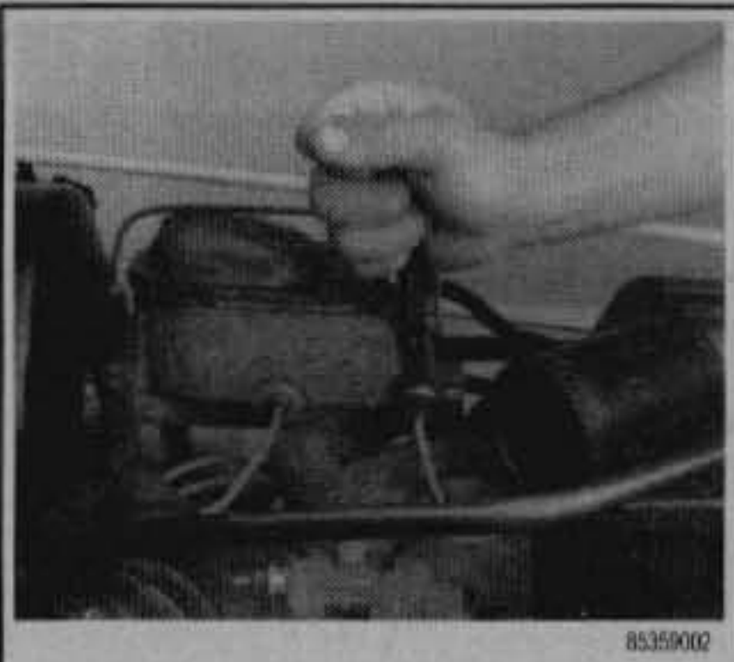

85359002

Fig. 4 Disconnecting a brake line from the master cylinder

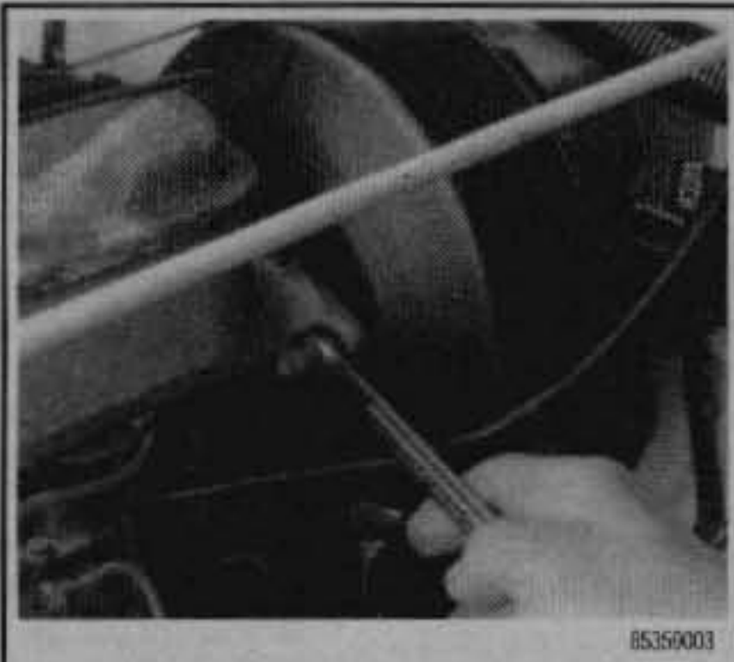

85359003

Fig. 5 Unfastening the master cylinder attaching nuts at the brake booster

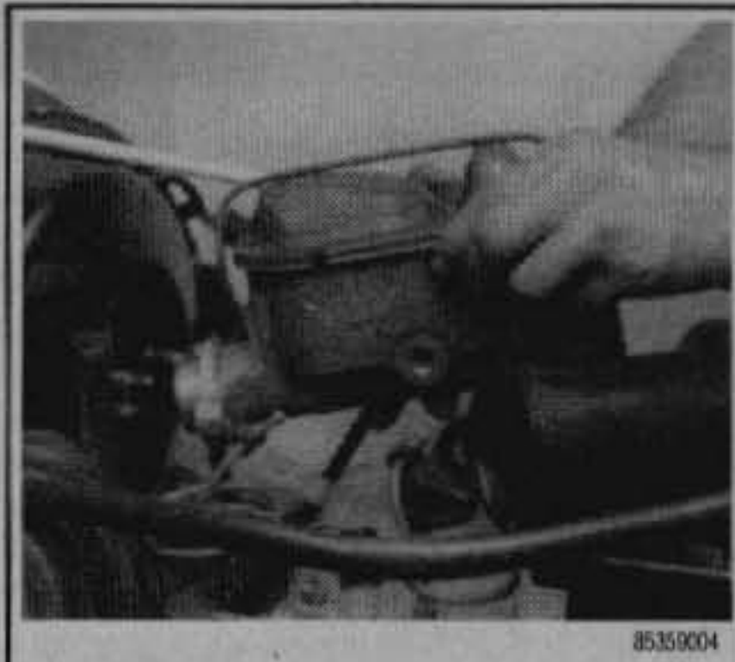

85359004

Fig. 6 Removing the master cylinder from the brake booster

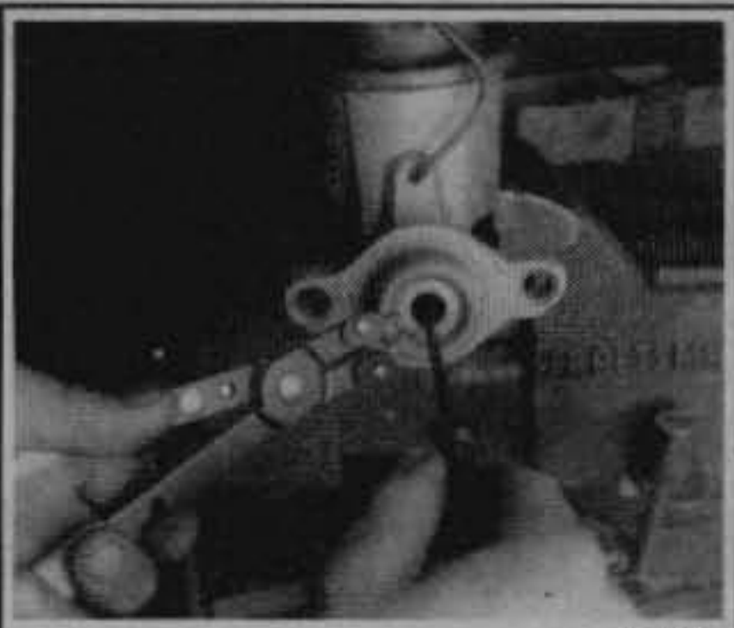

85359005

Fig. 7 Depress the pushrod and unseat the primary piston snapring

85359006

Fig. 8 Removing the primary piston snapring

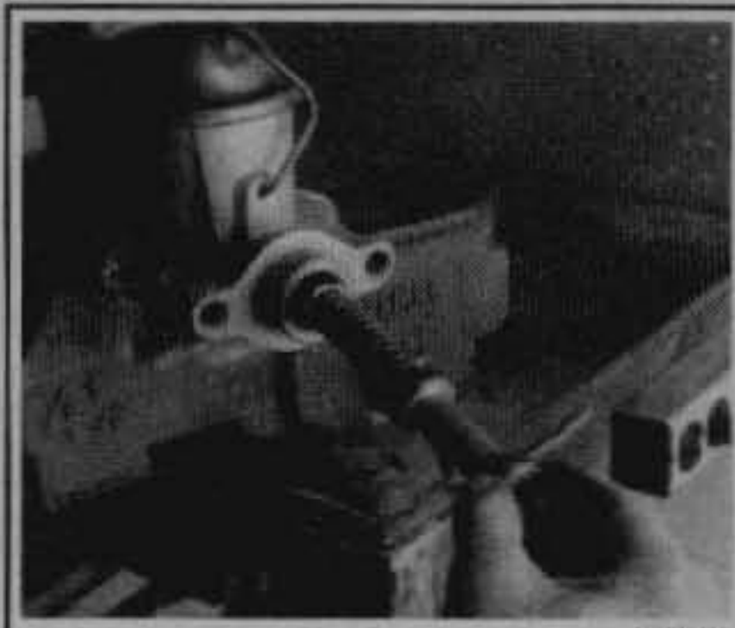

85359007

Fig. 9 Removing the primary piston assembly

85359008

Fig. 10 Removing the secondary piston assembly

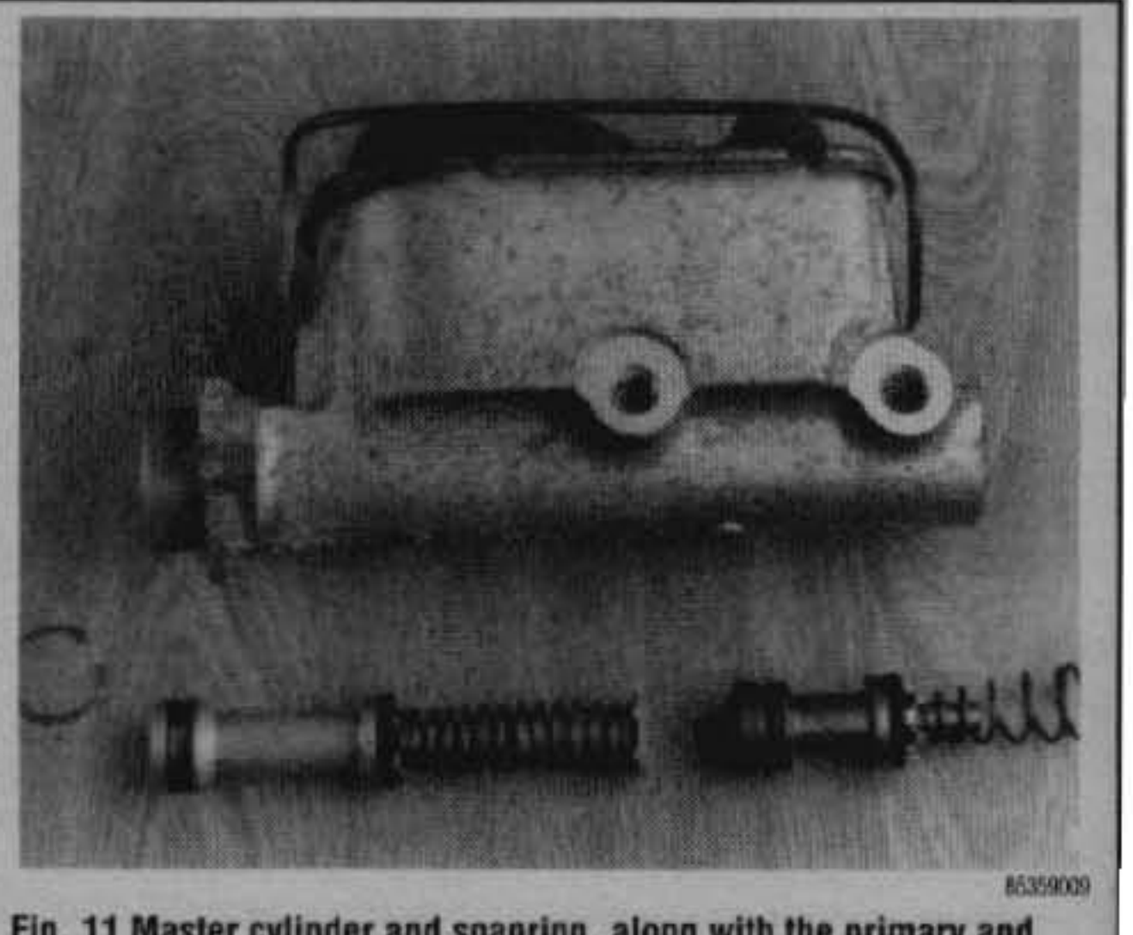

85359009

Fig. 11 Master cylinder and snapring, along with the primary and secondary piston assemblies

2. Push the pushrod in and unseat the primary piston snapring. Remove the pushrod, boot, snapring, and pushrod retainer as an assembly. With power brakes, push the primary piston in with a wooden dowel and remove the piston snapring.

3. Remove the primary and secondary piston assemblies. Air pressure applied through the piston stop hole will help in the removal of the secondary piston.

➡Discard both the primary and secondary piston assemblies. They are serviced in the rebuilding kit only as an assembly.

4. Clean and inspect the master cylinder. Replace the master cylinder body if the bore is severely scored, corroded, or pitted, cracked, porous, or is otherwise damaged. Check the by-pass and compensator ports to make sure that they are open and not plugged or dirty. Use brake fluid and air pressure to open these passages. Do not use wire.

➡Use only clean brake fluid or an approved cleaning solvent to wash the master cylinder. Do not use any solvent containing mineral oil such as gasoline, kerosene, alcohol, or carbon tetrachloride. Mineral oil harms rubber components.

5. Check the tube seats in the outlet ports. Replace the seats only if they are cracked, scored, cocked in the bore, or loose.

6. Install the replacement tube seats, if removed, using spare tube fitting nuts to press the seats into place. Be careful that the seats don't become cocked

during installation. Make sure that the seats are bottomed. Remove the tube fitting nuts and check for burrs or chips. Rinse the master cylinder in brake fluid and blow out all passages with compressed air.

7. Lubricate the master cylinder bore and secondary piston seal and cups with brake fluid and install the secondary piston assembly in the cylinder bore.
8. Lubricate the seals on the primary piston assembly with brake fluid and install the assembly in the master cylinder bore.
9. Push the primary piston inward with a wooden dowel and install the retaining snapring in the groove of the master cylinder bore.
10. Push in and install the piston snapring.
11. Fill the master cylinder reservoirs with brake fluid.
12. Fabricate and install bleed tubes in the master cylinder. Make sure the tube ends are submerged in brake fluid. Tubes can be fabricated from copper tubing and spare brake line fittings.
13. Using the pushrod or wooden dowel, press the pistons into the bore; then allow them to return under spring pressure. Repeat this operation until all air bubbles cease to appear in the fluid.
14. Remove the bleed tubes. Cap the outlet ports and install the diaphragm seal on the master cylinder cover.
15. Install the master cylinder in the vehicle. Bleed the system.

Power Brake Booster

REMOVAL & INSTALLATION

Without ABS

See Figures 12 and 13

For vehicles equipped with an Anti-lock Brake System (ABS), please refer to removal and installation of the power brake booster in the Anti-lock Brake portion of this section.

1. Loosen, but do not remove, the nuts attaching the master cylinder to booster.
2. Remove the instrument panel lower trim cover.
3. Remove the retaining clip attaching the booster pushrod to the brake pedal.
4. Disconnect the stoplight switch electrical connector.
5. Remove the bolts and nuts attaching the booster to the dash panel and remove the vacuum hose.
6. Remove the master cylinder from the booster and carefully position it aside, being careful not to damage the brake lines. Remove the booster.

To install:

7. Install the check valve and grommet in the booster. Position the booster on the vehicle and install the attaching nuts and bolts.
8. Attach the booster pushrod to the brake pedal. Tighten the booster mounting bolts and nuts to 22–30 ft. lbs. (30–41 Nm).
9. Connect the stoplight switch electrical connector and reinstall the trim panels.
10. Install the master cylinder on the booster and tighten the nuts to 15–25 ft. lbs. (21–34 Nm). Top off the master cylinder, connect the vacuum hose and check for proper operation of the system.

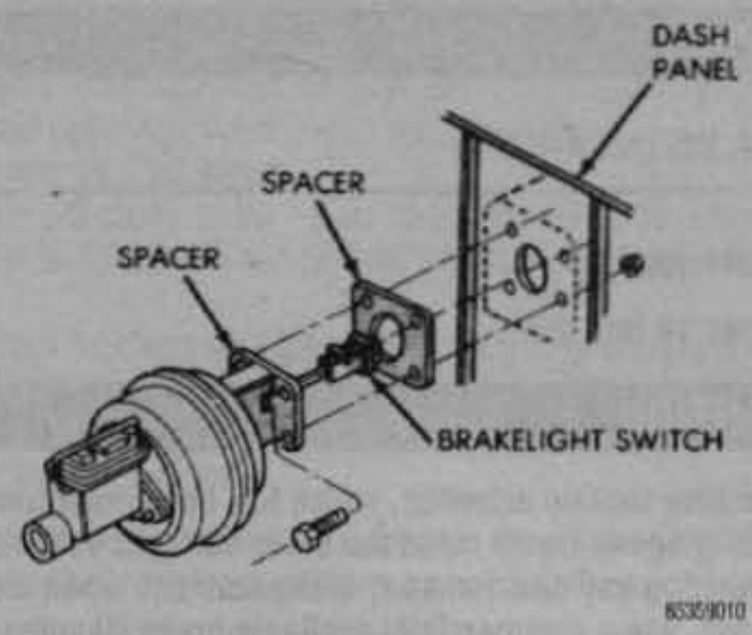

Fig. 12 Power brake booster mounting—early models without ABS

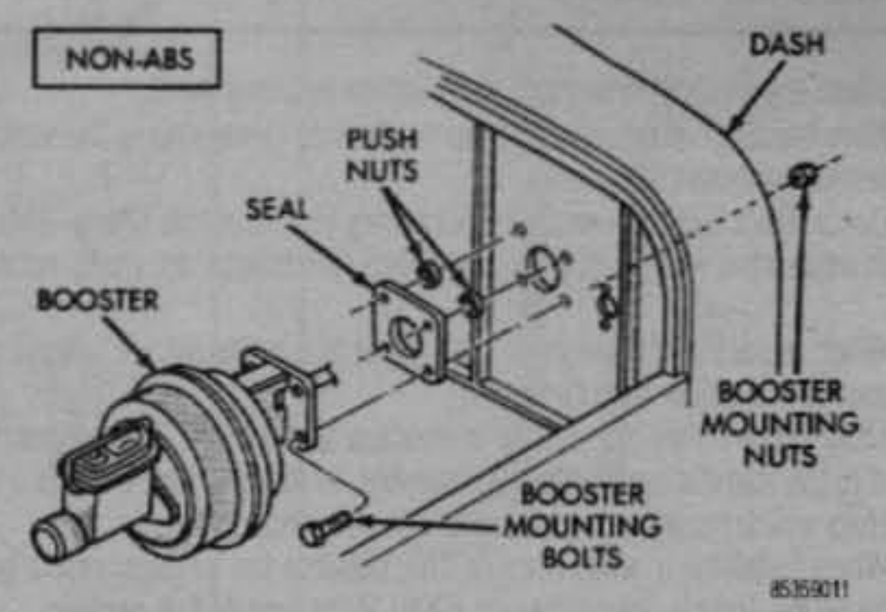

Fig. 13 Power brake booster mounting—later models without ABS

Combination/Proportioning Valve

The combination/proportioning valve is actually a three-part unit, containing a metering valve, pressure differential valve and brake pressure warning switch. If any of these functions fails, the unit must be replaced. It is not repairable.

The valve is located on the left fender panel, just below the master cylinder.

REMOVAL & INSTALLATION

Without ABS

See Figure 14

For vehicles equipped with an Anti-lock Brakes System (ABS), please refer to removal and installation of the Combination Valve in the Anti-lock Brake portion of this section.

1. Disconnect the brake lines at the valve and plug them.
2. Unbolt and remove the valve.
3. Installation is the reverse of removal. Bleed the system.

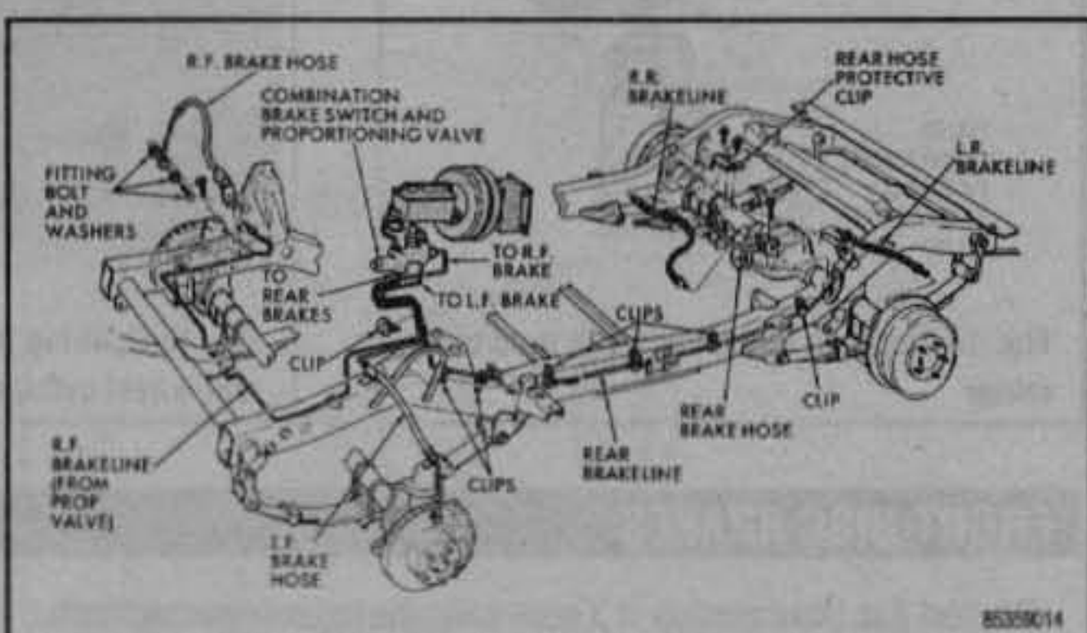

Fig. 14 Brake line routing and combination/proportioning valve location—without ABS

Brake Hoses and Lines

See Figure 14

INSPECTION

1. Inspect all connections for signs of leakage.
2. Replace any hose that shows signs of wear, scuffing or loss of rubber coating.
3. Replace any hose or line that becomes kinked or creased.
4. Replace any hose that shows signs of cracking or cutting.
5. Replace any hose that appears swollen.
6. Replace any line that shows signs of corrosion.

REMOVAL & INSTALLATION

1. Clean the connections thoroughly before opening them.
2. Have handy some means of capping the line remaining in the vehicle so as to prevent excessive fluid loss.
3. Use a wrench of the exact size necessary to loosen the fitting. Avoid using an adjustable wrench or pliers, as brake line fittings are easily rounded off.
4. When replacing a brake hose connected to a brake caliper, always replace the copper gasket under the union.
5. Front brake hoses are usually connected to the metal line at a junction attached to the frame or a suspension member. In many cases, there is a U-shaped clip which must be driven out to free the junction.
6. When installing a brake hose or line, observe the torques, where possible. Refer to the Torque Specifications Chart at the end of this section.

Bleeding Brake System

See Figures 15, 16 and 17

➡Vehicles equipped with an Anti-lock Brake System (ABS) require a special bleeding procedure. Please refer to ABS Bleeding, later in this section.

The hydraulic brake system must be bled whenever a fluid line has been disconnected because air gets into the system. A leak in the system may sometimes be indicated by a spongy brake pedal. Air trapped in the system is compressible and does not permit the pressure applied to the brake pedal to be transmitted solidly through the brakes. The system must be absolutely free from air at all times. If the master cylinder has been overhauled or a new cylinder has been installed, bleed the cylinder on a bench before installation. When bleeding brakes, bleed at the wheel most distant from the master cylinder first, the next most distant second, and so on. During the bleeding operation the master cylinder must be kept at least ¾ full of brake fluid.

1. Bleed the brake system in the following sequence:
   a. Master cylinder
   b. Right rear wheel
   c. Left rear wheel
   d. Right front wheel
   e. Left front wheel

To bleed the brakes, first carefully clean all dirt from around the master cylinder filler cap. Remove the filler cap and fill the master cylinder with DOT 3 brake fluid to the lower edge of the filler neck.

Bleed the master cylinder first. Have a helper operate the brake pedal while bleeding each master cylinder fluid outlet line. Do not allow the master cylinder to to run out of fluid,as this will allow additional air to be drawn into the cylinder.

Clean off the bleeder connections at all four wheel cylinders. Attach the bleeder hose to the right rear wheel cylinder bleeder screw and place the end of the tube in a glass jar, submerged in brake fluid. Open the bleeder valve ½–¾ of a turn. Have an assistant depress the brake pedal slowly and allow it to return. Continue this pumping action to force any air out of the system. When bubbles cease to appear at the end of the bleeder hose, close the bleeder valve and remove the hose.

Check the level of fluid in the master cylinder reservoir and replenish as necessary.

After the bleeding operation at each wheel cylinder has been completed, fill the master cylinder reservoir and replace the filler plug.

Do not reuse the fluid which has been removed from the lines through the bleeding process because it contains air bubbles and dirt.

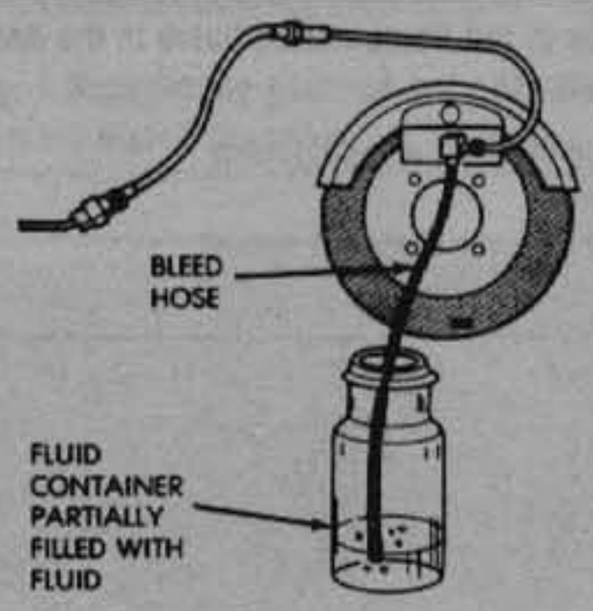

Fig. 15 Common bleed hose and fluid container

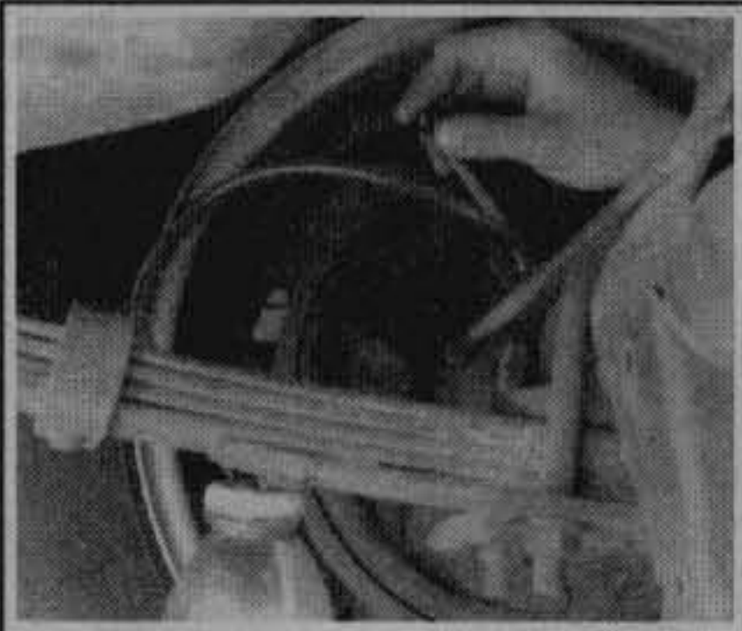

Fig. 16 Opening the bleed screw at the rear wheel cylinder

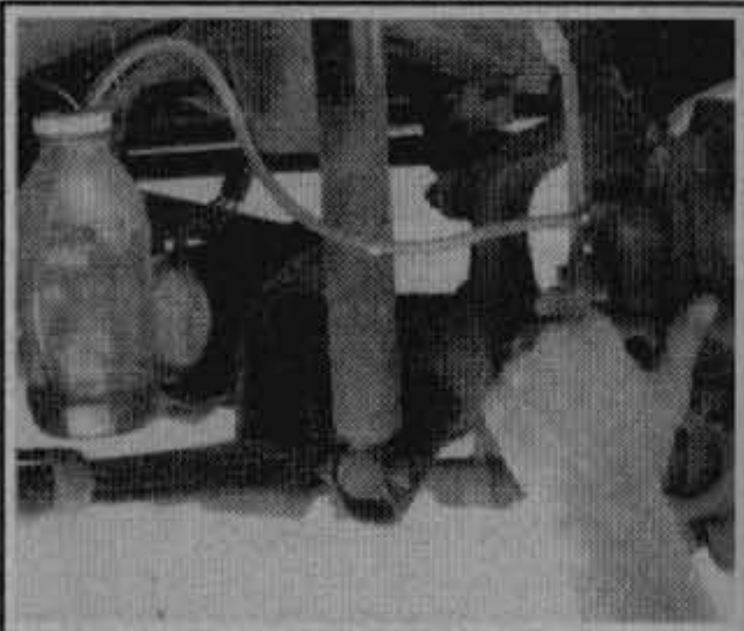

Fig. 17 Opening the bleed screw at the front brake caliper

FRONT DISC BRAKES

The front disc brake consists of 3 assemblies: the caliper assembly, the hub and rotor assembly, and the support and shield assembly.

The caliper is a single piston sliding type, of one piece casting construction with the inboard side containing the single piston, piston bore and the bleeder screw and fluid inlet holes. There are two brake pads within the caliper, positioned on either side of the rotor. The brake pads take the place of brake shoes on drum brakes and the rotor takes the place of brake drums. The pads themselves actually consist of two parts: the metal shoe and the composition lining which is bonded or riveted to the shoe.

The significant operating feature of the single piston caliper is that it is free to slide laterally on the anchor plate. The pressure applied to the piston is transmitted to the inboard brake pad, forcing the lining of the pad against the inboard rotor surface. The pressure applied to the inboard end or bottom of the piston bore forces the caliper to slide toward the inboard side. This inward movement of the caliper causes the outboard section of the caliper to apply pressure against the lining of the outboard pad, forcing the lining of the outboard pad, forcing the lining against the outboard surface of the rotor. As hydraulic pressure builds within the brake lines, due to the increased application of pressure at the brake pedal, the brake pad assemblies press against the rotor surfaces with increasing force, thus slowing the rotation of the rotor.

Brake Pads

REMOVAL & INSTALLATION

1987–89 Vehicles

See Figures 18 thru 25

CAUTION

Brake shoes may contain asbestos, which has been determined to be a cancer causing agent. Never clean the brake surfaces with compressed air! Avoid inhaling any dust from any brake surface! When cleaning brake surfaces, use a commercially available brake cleaning fluid.

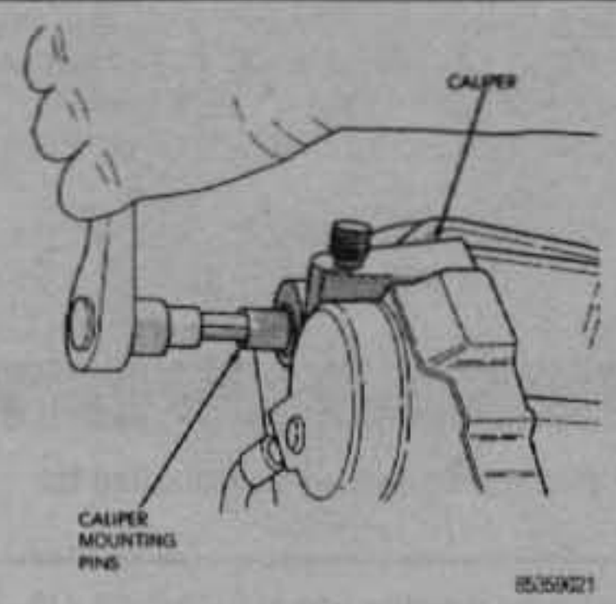

Fig. 18 Removing the caliper mounting pins

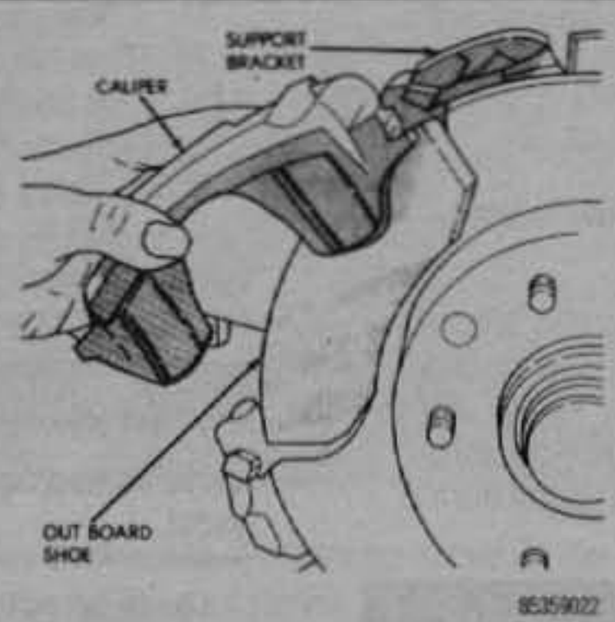

Fig. 19 Removing the caliper from the support bracket

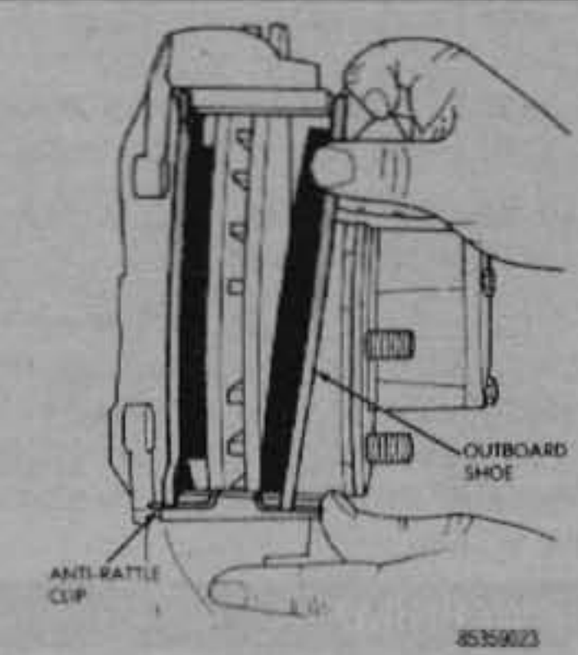

Fig. 20 Removing the outboard shoe

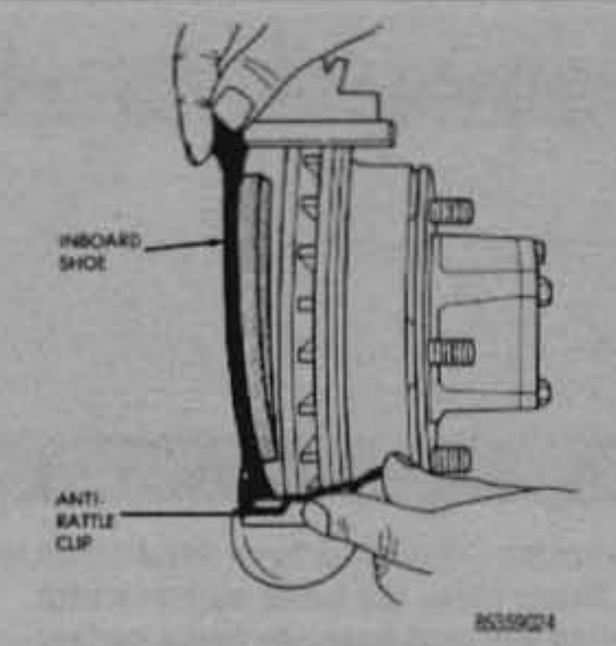

Fig. 21 Removing the inboard shoe

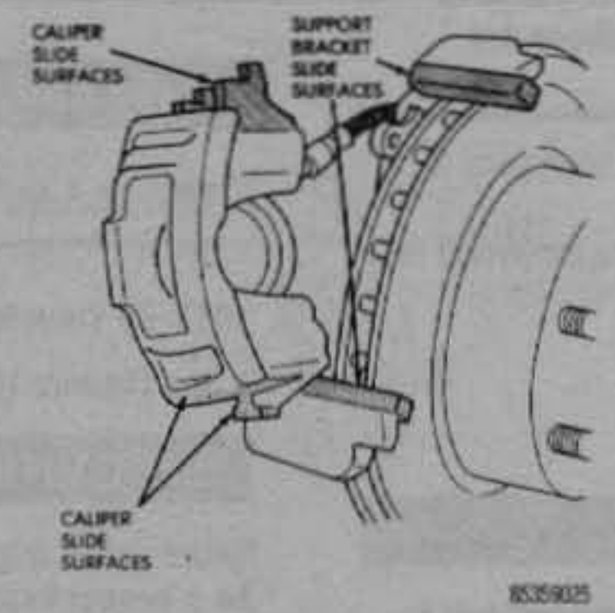

Fig. 22 Clean and lubricate the slide surfaces

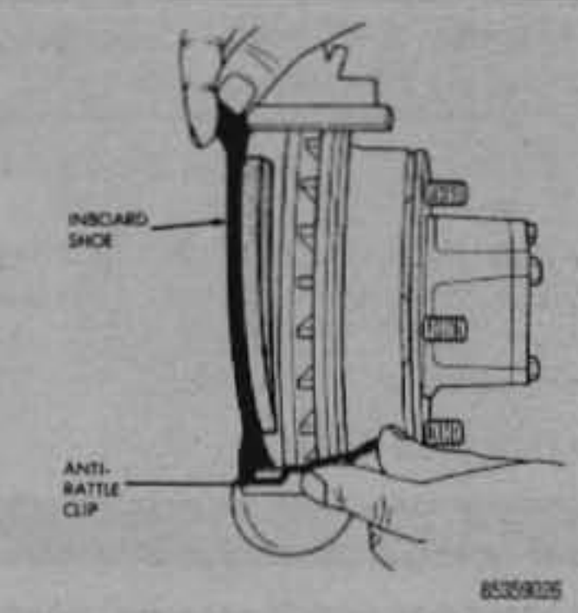

Fig. 23 Installing the anti-rattle clip and inboard brake shoe

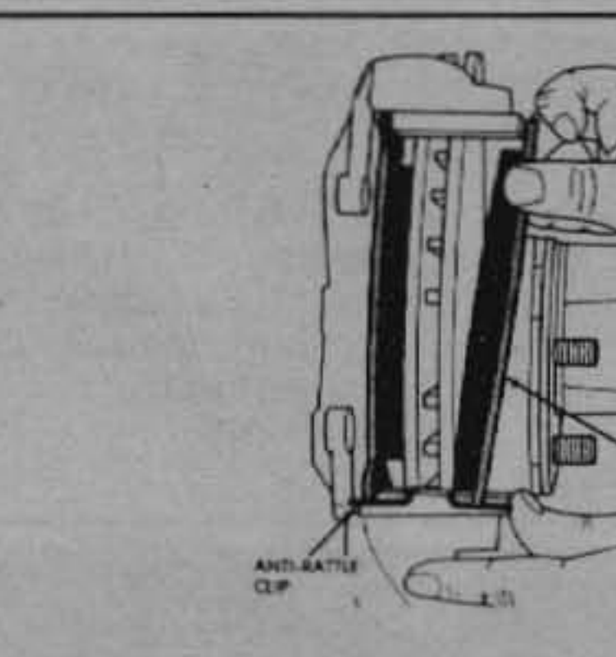

Fig. 24 Installing the outboard brake shoe

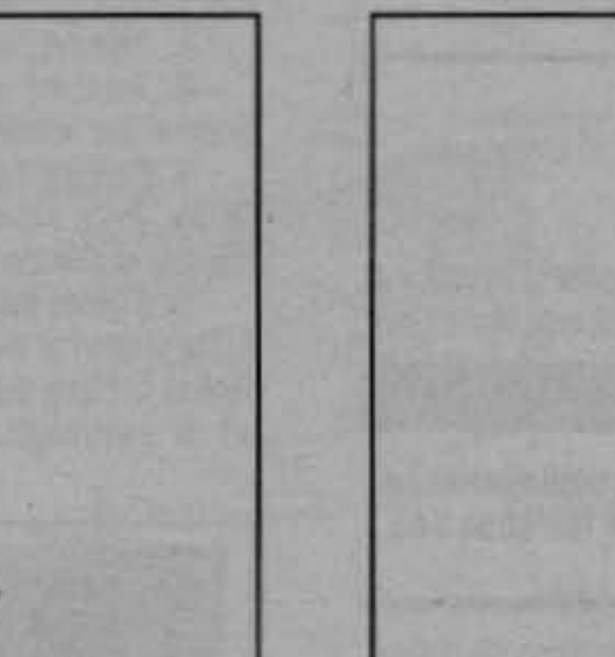

Fig. 25 Caliper components

1. Raise and support the vehicle safely. Remove the wheel(s) on the side to be worked on.
2. Drain a small amount of the brake fluid from the front reservoir. Use the bleeder screw at the front outlet port to drain the fluid.
3. Remove the front wheels.
4. Place a C-clamp on the caliper so that the solid end contacts the back of the caliper and the screw end contacts the metal part of the outboard brake pad.
5. Tighten the clamp until the caliper moves far enough to force the piston to the bottom of the piston bore. This will back the brake pads off of the rotor surface to facilitate the removal and installation of the caliper assembly.
6. Remove the C-clamp.

➡Do not push down on the brake pedal or the piston and brake pads will return to their original positions up against the rotor.

7. Remove both of the Allen head mounting bolts. Tilt the top of the caliper outward and lift off the rotor.
8. Hold the anti-rattle clip against the caliper anchor plate and remove the outboard brake pad.
9. Remove the inboard pad and its anti-rattle clip.
10. Use a piece of wire to support the caliper so that no tension is placed on the brake hose. DO NOT allow the caliper to hang by the brake hose.

To install:

11. Clean all the mounting holes and bushing grooves in the caliper ears. Clean the mounting bolts. Replace the bolts if they are corroded or if the threads are damaged. Wipe the inside of the caliper clean, including the exterior of the dust boot. Inspect the dust boot for cuts or cracks and for proper seating in the piston bore. If evidence of fluid leakage is noted, the caliper should be rebuilt.

➡Do not use abrasives on the bolts, in order not to destroy their protective plating. You should not use compressed air to clean the inside of the caliper, as it may unseat the dust boot seal.

12. Install the inboard anti-rattle clip on the trailing end of the anchor plate. The split end of the clip must face away from the rotor.

13. Install the inboard pad in the caliper. The pad must lay flat against the piston.
14. Install the outboard pad in the caliper while holding the anti-rattle clip.
15. With the pads installed, position the caliper over the rotor.

➡Before securing the caliper, ensure the brake hose is not twisted, kinked or touching any chassis parts.

16. Lubricate the caliper pins and bushings with silicone grease. Line up the mounting holes in the caliper and the support bracket and insert the mounting bolts. Make sure that the bolts pass under the retaining ears on the inboard shoes. Push the bolts through until they engage the holes of the outboard pad and caliper ears. Thread the bolts into the support bracket and tighten them to 30 ft. lbs. (41 Nm).

WARNING

On models without anti-lock brakes, pump the pedal until the caliper pistons and brake shoes are seated. On models with anti-lock brakes, turn the ignition ON and allow the booster pump to build pressure, then pump the brake pedal until the shoes are seated and the indicator lights turn off.

17. Fill the master cylinder with brake fluid and pump the brake pedal to seat the pads.
18. Install the wheel assembly and lower the vehicle. Check the level of the brake fluid in the master cylinder and fill as necessary.

1990–95 Vehicles

See Figures 26 thru 38

CAUTION

Brake shoes may contain asbestos, which has been determined to be a cancer causing agent. Never clean the brake surfaces with compressed air! Avoid inhaling any dust from any brake surface! When cleaning brake surfaces, use a commercially available brake cleaning fluid.

1. Remove ⅔ of the brake fluid from the front reservoir.
2. Raise the vehicle so that the wheel to be worked on is off the ground. Support the vehicle with jackstands.
3. Remove the front wheels.
4. Place a C-clamp on the caliper so that the solid end contacts the back of the caliper and the screw end contacts the metal part of the outboard brake pad.

WARNING

Do not allow the clamp screw to bear directly on the outboard shoe retainer spring. Use a wood or metal spacer between the shoe and clamp screw.

5. Tighten the clamp until the caliper moves far enough to force the piston to the bottom of the piston bore. This will back the brake pads off the rotor surface to facilitate the removal and installation of the caliper assembly.
6. Remove the C-clamp.

➡Do not push down on the brake pedal or the piston and brake pads will return to their original positions up against the rotor.

7. Remove the caliper slide pins (bolts) and lift off the caliper. Don't disconnect the brake line! Don't allow the brake line to support the weight of the caliper! Attach a support wire to the caliper and hang it from the vehicle suspension.
8. To remove the outboard shoe, press one end of the shoe inward to disengage the shoe lug and rotate the shoe upward until the spring retainer clears the caliper. Then press the opposite end of the shoe inward to disengage the opposite shoe lug and rotate the shoe up and out of the caliper.
9. Remove the inboard pad, grasp the ends of the shoe and tilt the shoe outward to release the springs from the caliper piston, then remove the pad from the caliper.
10. Clean the caliper with a rag and solvent made for cleaning brake surfaces. Avoid disturbing the dust boot.
11. If there are any indications of fluid leakage, the caliper must be rebuilt.
12. Clean the anchor plate and caliper mounting surfaces with a wire brush.
13. Coat the mounting surfaces with a light coating of caliper lubricant.
14. Lubricate the caliper mounting bolts and bushings with GE 661 or Dow 111 or equivalent silicone grease.
15. Install the inboard, then the outboard pads. Check the position of the springs. Make sure that they are seated properly and that the spring ends are in contact with the pad mounting ears.

WARNING

Avoid damaging the caliper piston dust boot while installing the pads!

16. Install the caliper and tighten the mounting pins to 7–15 ft. lbs. (10–20 Nm).
17. Fill the master cylinder and press firmly on the brake pedal to seat the pads.
18. Install the wheels, and lower the vehicle.

Brake Caliper

REMOVAL & INSTALLATION

1987–89 Vehicles

See Figures 18 and 19

CAUTION

Brake shoes may contain asbestos, which has been determined to be a cancer causing agent. Never clean the brake surfaces with compressed air! Avoid inhaling any dust from any brake surface! When cleaning brake surfaces, use a commercially available brake cleaning fluid.

1. Remove ⅔ of the brake fluid from the front reservoir.
2. Raise the vehicle so that the wheel to be worked on is off the ground. Support the vehicle with jackstands.
3. Remove the front wheels.
4. Place a C-clamp on the caliper so that the solid end contacts the back of the caliper and the screw end contacts the metal part of the outboard brake pad.
5. Tighten the clamp until the caliper moves far enough to force the piston to the bottom of the piston bore. This will back the brake pads off the rotor surface to facilitate the removal and installation of the caliper assembly.
6. Remove the C-clamp.

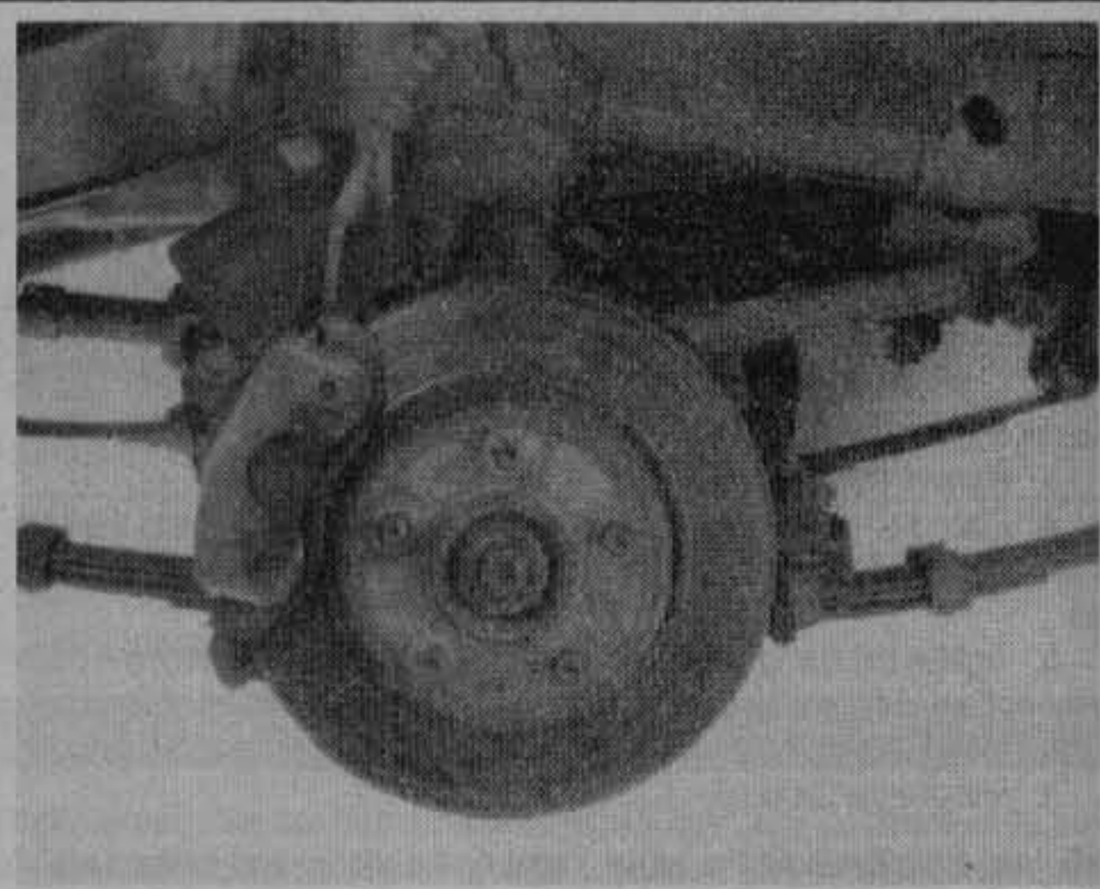

Fig. 26 View of the brake caliper and rotor assembly

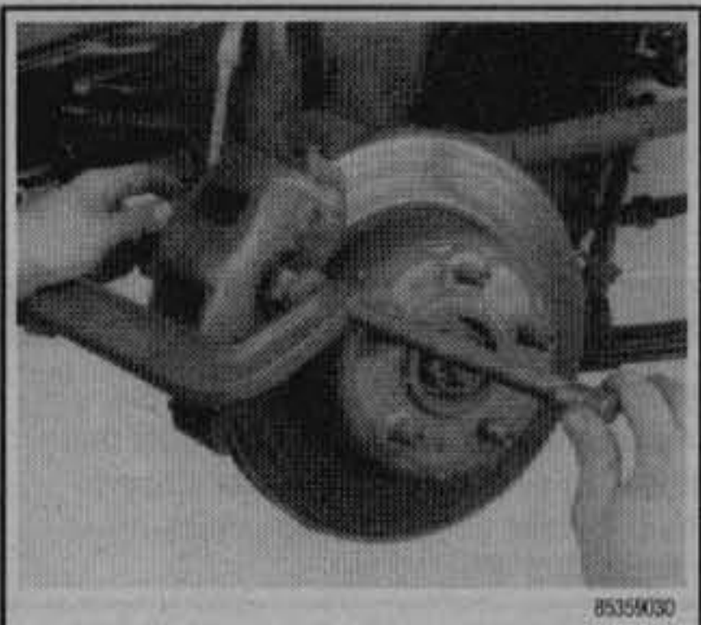

85359030

Fig. 27 C-clamp attachment for bottoming the caliper piston in the bore

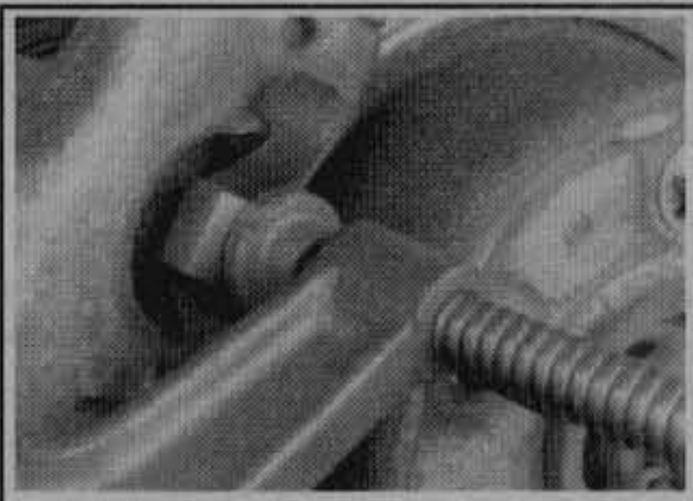

85359031

Fig. 28 Position the C-clamp screw on the outboard shoe as shown, using a spacer between the shoe retainer spring and the clamp screw

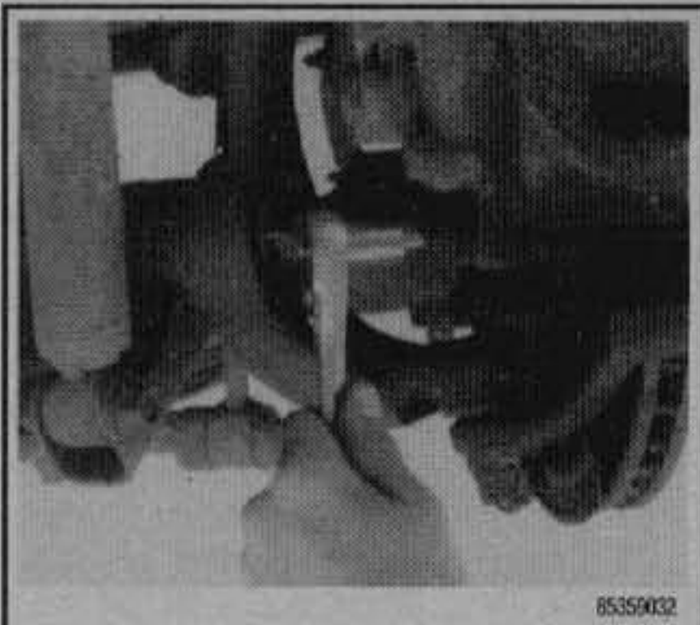

85359032

Fig. 29 Use a socket to loosen the caliper slide pins (mounting bolts)

85359033

Fig. 30 Removing the caliper slide pins (mounting bolts)

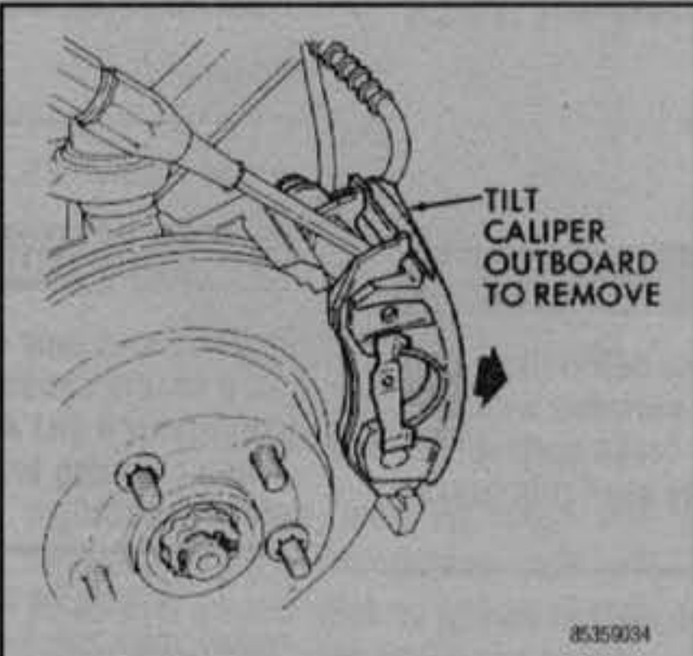

85359034

Fig. 31 Tilt the caliper outboard to remove

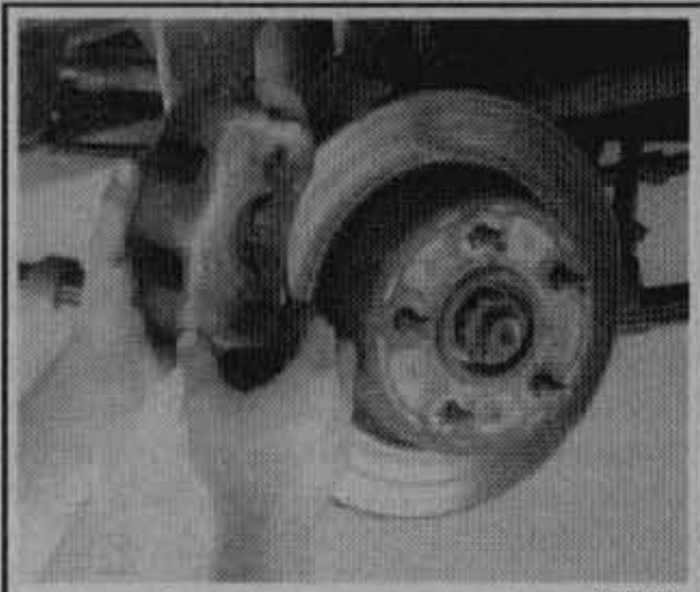

85359035

Fig. 32 Carefully lift the caliper off the rotor and knuckle

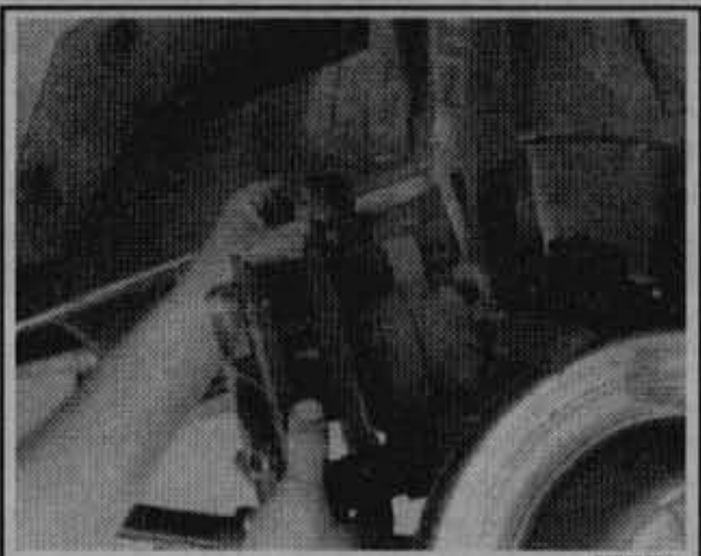

85359036

Fig. 33 Attach a support wire to the caliper and hang it from the vehicle suspension to relieve tension on the brake hose

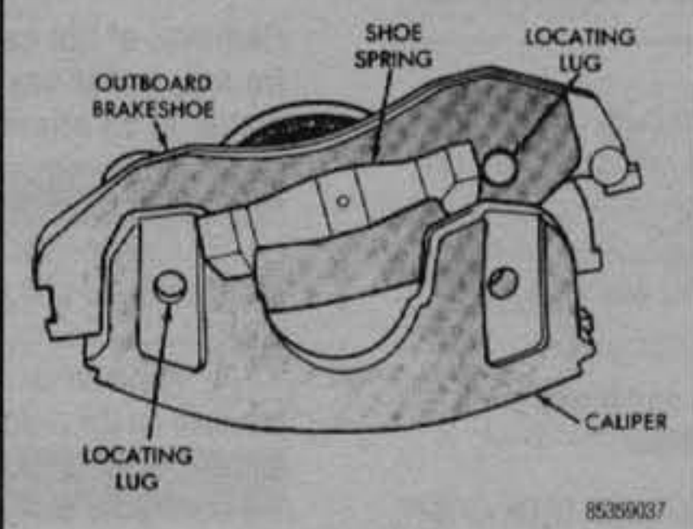

85359037

Fig. 34 Removing the outboard brake shoe

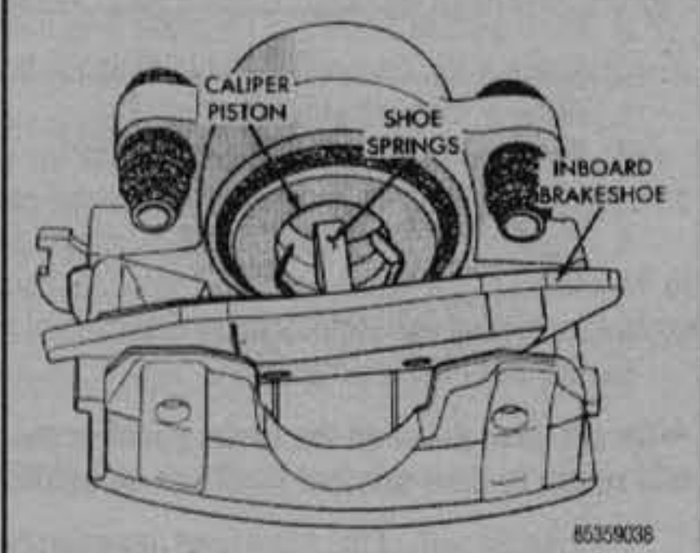

85359038

Fig. 35 Removing the inboard brake shoe

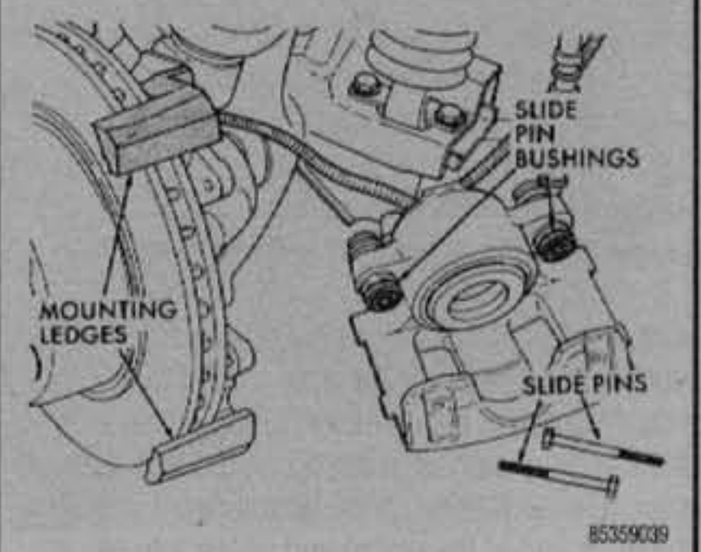

85359039

Fig. 36 Caliper lubrication points

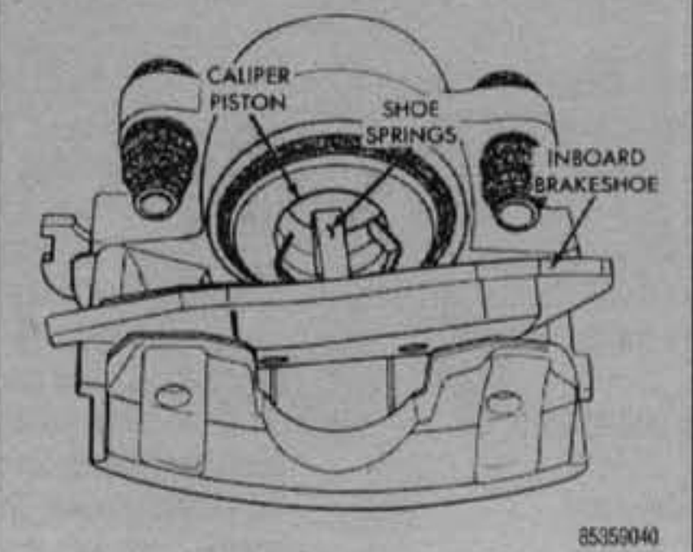

85359040

Fig. 37 Installing the inboard brake shoe

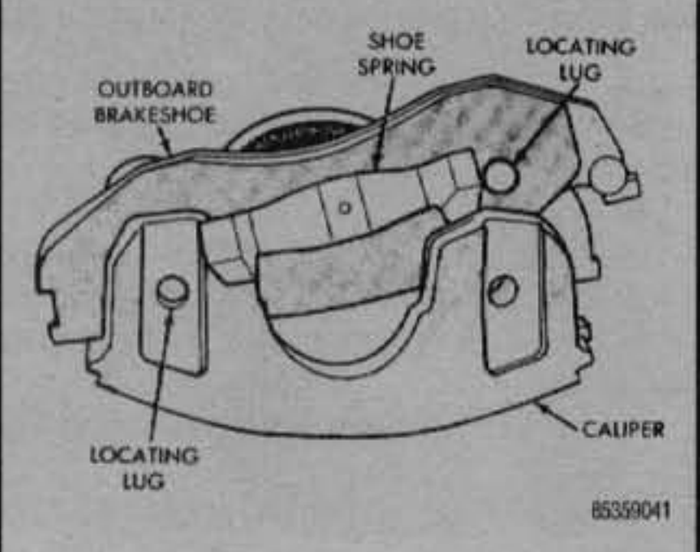

85359041

Fig. 38 Installing the outboard brake shoe

➡Do not push down on the brake pedal or the piston and brake pads will return to their original positions up against the rotor.

7. Remove the caliper mounting pins and lift off the caliper. Don't disconnect the brake line unless the caliper is being removed for service! Don't allow the brake line to support the weight of the caliper! If you disconnect the brake line, cap it to prevent fluid loss.
8. Clean the caliper with a rag and solvent made for cleaning brake surfaces. Avoid disturbing the dust boot.
9. If there are any indications of fluid leakage, the caliper must be rebuilt.
10. Clean the anchor plate and caliper mounting surfaces with a wire brush.
11. Coat the mounting surfaces with a light coating of caliper lubricant.
12. Install the caliper and tighten the mounting pins to 30 ft. lbs. (41 Nm).
13. Connect the hose to the caliper, using a new copper gasket under the hose union. Torque the bolt to 25 ft. lbs. (34 Nm).
14. Fill the master cylinder and press firmly on the brake pedal to seat the pads.
15. Install the wheels, and lower the vehicle.

➡If the brake fluid hose was disconnected, it will be necessary to bleed the hydraulic system.

1990–95 Vehicles

• See Figures 29, 30, 31, 32 and 33

CAUTION

Brake shoes may contain asbestos, which has been determined to be a cancer causing agent. Never clean the brake surfaces with compressed air! Avoid inhaling any dust from any brake surface! When cleaning brake surfaces, use a commercially available brake cleaning fluid.

1. Raise and support the vehicle safely. Remove the wheel(s) on the side to be worked on.

➡For vehicles equipped with an Anti-lock Brake System (ABS), refer to the proper procedures concerning brake system servicing.

2. Drain a small amount of the brake fluid from the front reservoir. Use the bleeder screw at the front outlet port to drain the fluid.
3. Remove the front wheels.
4. Place a C-clamp on the caliper so that the solid end contacts the back of the caliper and the screw end contacts the metal part of the outboard brake pad.
5. Tighten the clamp until the caliper moves far enough to force the piston to the bottom of the piston bore. This will back the brake pads off of the rotor surface to facilitate the removal and installation of the caliper assembly.
6. Remove the C-clamp.

➡Do not push down on the brake pedal or the piston and brake pads will return to their original positions up against the rotor.

7. Remove both of the Allen head mounting bolts. Tilt the top of the caliper outward and lift off the rotor.
8. Remove the brake pads from the caliper.

➡If the caliper is not being removed for overhaul, it is not necessary to remove the caliper assembly entirely from the vehicle. DO NOT remove the brake line. Suspend the caliper with a piece of wire. DO NOT allow the brake hose to support the weight of the caliper.

9. Remove the caliper fitting bolt and disconnect the front brake line at the caliper. Discard the fitting bolt washers, they are not reusable. Cap or tape the open ends of the hose to keep dirt out.

To Install:

10. Clean all the mounting holes and bushing grooves in the caliper ears. Clean the mounting bolts. Do not use abrasives on the bolts it will destroy their protective plating. Replace the bolts if they are corroded or if the threads are damaged.
11. Reconnect the brake hose to the caliper. Tighten the bolt to 23 ft. lbs. (31 Nm).
12. Install the brake pads and position the caliper over the rotor.

➡Before securing the caliper, ensure the brake hose is not twisted, kinked or touching any chassis parts.

13. Lubricate the caliper pins and bushings with silicone grease. Line up the mounting holes in the caliper and the support bracket and insert the mounting bolts. Make sure that the bolts pass under the retaining ears on the inboard shoes. Push the bolts through until they engage the holes of the outboard pad and caliper ears. Thread the bolts into the support bracket and tighten them to 30 ft. lbs. (41 Nm).

CAUTION

On models without anti-lock brakes, pump the pedal until the caliper pistons and brake shoes are seated. On models with anti-lock brakes, turn the ignition ON and allow the booster pump to build pressure, then pump the brake pedal until the shoes are seated and the indicator lights turn off.

14. Fill the master cylinder with brake fluid and pump the brake pedal to seat the pads.
15. Install the wheel assembly and lower the vehicle. Check the level of the brake fluid in the master cylinder and fill as necessary.

OVERHAUL

• See Figures 25, 39 thru 44

CAUTION

Brake shoes may contain asbestos, which has been determined to be a cancer causing agent. Never clean the brake surfaces with compressed air! Avoid inhaling any dust from any brake surface! When cleaning brake surfaces, use a commercially available brake cleaning fluid.

1. Remove the caliper assembly and the brake pads. If the pads are to be reused, mark their location in the caliper.
2. Wash the exterior with clean brake fluid, then drain any residual fluid from the caliper and place it on a clean work surface.

CAUTION

Removal of the caliper piston requires the use of compressed air. Do not, under any circumstances, place your fingers in front of the piston in an attempt to catch or protect it, instead use several clean cloths.

3. Pad the interior of the caliper with clean cloths. Use several cloths and pad the interior well to avoid damaging the piston when it comes out of the bore.
4. Insert an air nozzle into the inlet hole in the caliper and gently apply air pressure on the piston to push it out of the bore. Use only enough air pressure to ease the piston out of the bore.
5. Pry the dust boot out of the bore with a screwdriver. Use caution during this operation to prevent scratching the bore. Discard the dust boot.
6. Remove the piston seal from the piston bore and discard the seal. Use only non-scratching implements such as a wooden stick or a piece of plastic to remove the seal. Do not use a metal tool as it could very easily scratch the bore.
7. Remove the bleeder screw. Remove and discard the sleeves and rubber bushings from the mounting ears.
8. Clean all parts with clean brake fluid. Blow out all of the passages in the caliper and bleeder valve. Use only dry and filtered compressed air.
9. Examine the piston for defects. Replace the piston if it is nicked, scratched, corroded. Examine the caliper piston bore for the same defects as the piston. Minor stains or corrosion can be polished with a fiber brush.
10. Lubricate the bore and new seal with brake fluid and install the seal in the groove in the bore.
11. Lubricate the piston with brake fluid and install the new dust boot into the piston groove so that the fold in the boot faces the open end of the piston. Slide the metal portion of the dust boot over the open end of the piston and push the retainer toward the back of the piston until the lip on the fold seats in the piston groove. Then push the retainer portion of the boot forward until the boot is flush with the rim at the open end of the piston and snaps into place.
12. Insert the piston in the bore, being careful not to unseat the piston seal. Push the piston to the bottom of the bore.

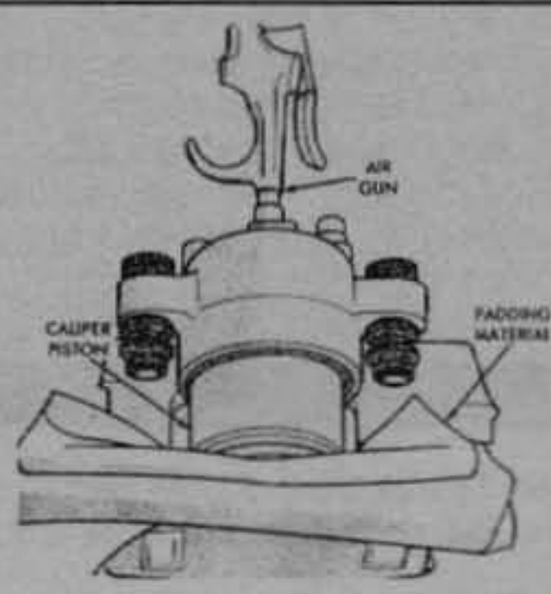

Fig. 39 Removing the caliper piston with compressed air

Fig. 40 Removing the caliper piston—1990–95 shown

Fig. 41 Carefully pry loose the piston dust boot

Fig. 42 Removing the piston dust boot

Fig. 43 Carefully pry loose the caliper piston seal using a non-scratching implement (such as a wooden stick or a piece of plastic). A metal tool, such as the one shown, could very easily scratch the bore

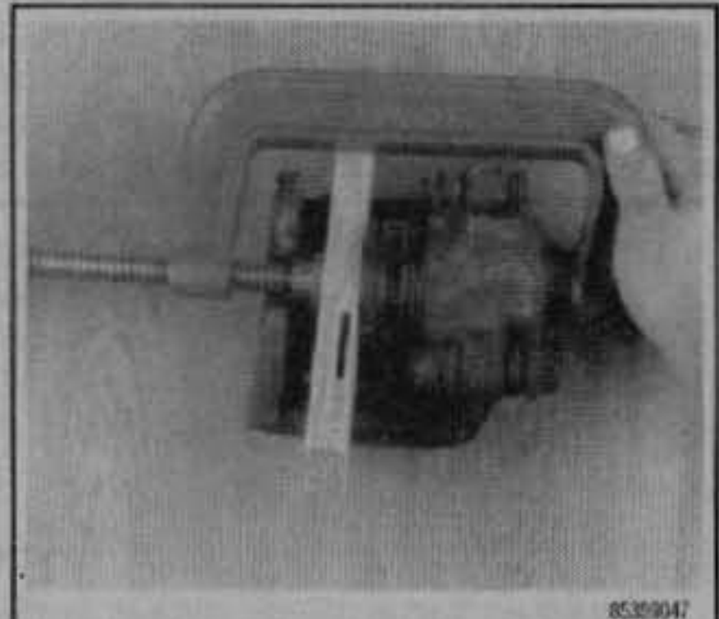

Fig. 44 Installing and seating the caliper piston and dust boot

13. Install the bleeder screw.
14. Connect the brake line to the caliper using new gaskets.
15. Install the brake pads.
16. Install the caliper. Bleed the hydraulic system.

Brake Disc (Rotor)

REMOVAL & INSTALLATION

See Figures 45, 46 and 47

CAUTION

Brake shoes may contain asbestos, which has been determined to be a cancer causing agent. Never clean the brake surfaces with compressed air! Avoid inhaling any dust from any brake surface!

When cleaning brake surfaces, use a commercially available brake cleaning fluid.

1. Raise and support the front end on jackstands.
2. Remove the wheels.
3. Remove the caliper as outlined earlier, but don't disconnect the brake line. Suspend the caliper out of the way by wiring it to the front spring.
4. Remove the rotor retainers and remove the rotor from the hub.

To install:

5. Inspect the rotor, clean the mounting surfaces and install it on the hub with the retainers.
6. Install the caliper and wheel.

INSPECTION AND MEASUREMENT

Check the rotor for surface cracks, nicks, broken cooling fins and scoring of both contact surfaces. Some scoring of the surfaces may occur during normal

Fig. 45 Removing one of the rotor retainers

Fig. 46 After removing the rotor retainers, slide the rotor off the studs

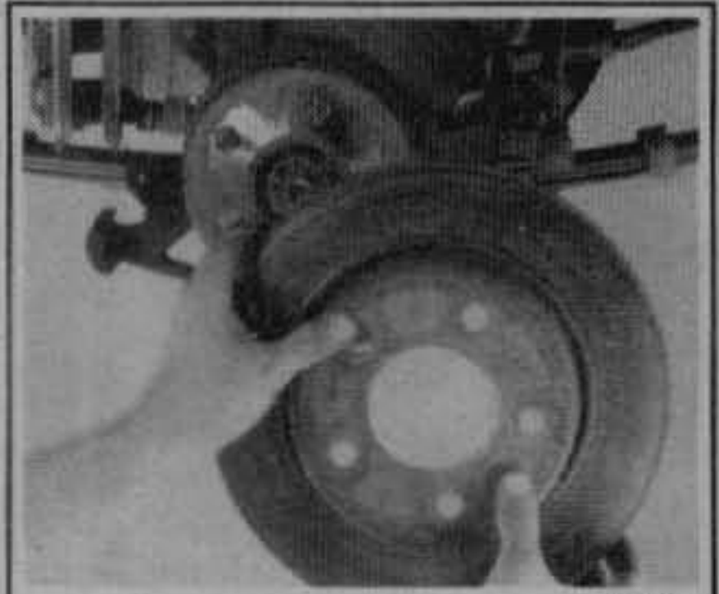

Fig. 47 Removing the rotor from the vehicle

use. Scoring that is 0.009 in. (0.23mm) deep or less is not detrimental to the operation of the brakes.

If the rotor surface is heavily rusted or scaled, clean both surfaces on a disc brake lathe using flat sanding discs before attempting any measurements.

With the hub and rotor assembly mounted on the spindle of the vehicle or a disc brake lathe and all play removed from the wheel bearings, assemble a dial indicator so that the stem contacts the center of the rotor braking surface. Zero the dial indicator before taking any measurements. Lateral run-out must not exceed 0.005 in. (0.13mm). Excessive run-out will cause the rotor to wobble and knock the piston back into the caliper causing increased pedal travel, noise and vibration.

After the rotor has been refinished, the minimum thickness of 0.815 in. (20.7mm) for 1987–89 models, 0.940 in. (24mm) for 1990 models and 0.890 in. (22.7 mm) for 1991–95 models is acceptable. Discard the rotor if the thickness is less.

REAR DRUM BRAKES

Brake Drums

REMOVAL & INSTALLATION

CAUTION

Brake shoes may contain asbestos, which has been determined to be a cancer causing agent. Never clean the brake surfaces with compressed air! Avoid inhaling any dust from any brake surface! When cleaning brake surfaces, use a commercially available brake cleaning fluid.

The brake drums are held in position by spring clip type locknuts or by three drum-to-hub retaining screws, depending on the model and year. After the spring type locknuts or retaining screws are removed, the drum can be slid off the axle shaft or hub and brake shoes. It may be necessary to back off the brake shoe adjustment so that any lip on the inside of the brake drum clears the brake shoes.

INSPECTION

Using a brake drum micrometer, check all drums. Should a brake drum be scored or rough, it may be reconditioned by grinding or turning on a lathe. Do not remove more than 0.030 in. (0.8mm) thickness of metal.

Use a clean cloth to clean dirt from the brake drums. If further cleaning is required, use soap and water. Do not use brake fluid, gasoline, kerosene or any other similar solvents.

Brake Shoes

REMOVAL & INSTALLATION

See Figures 48 thru 65

CAUTION

Brake shoes may contain asbestos, which has been determined to be a cancer causing agent. Never clean the brake surfaces with compressed air! Avoid inhaling any dust from any brake surface! When cleaning brake surfaces, use a commercially available brake cleaning fluid.

An inexpensive brake spring removal tool, available at most auto parts stores, will make this procedure much easier.

1. Jack the vehicle up and safely support it so that the wheels to be worked on are off the ground.

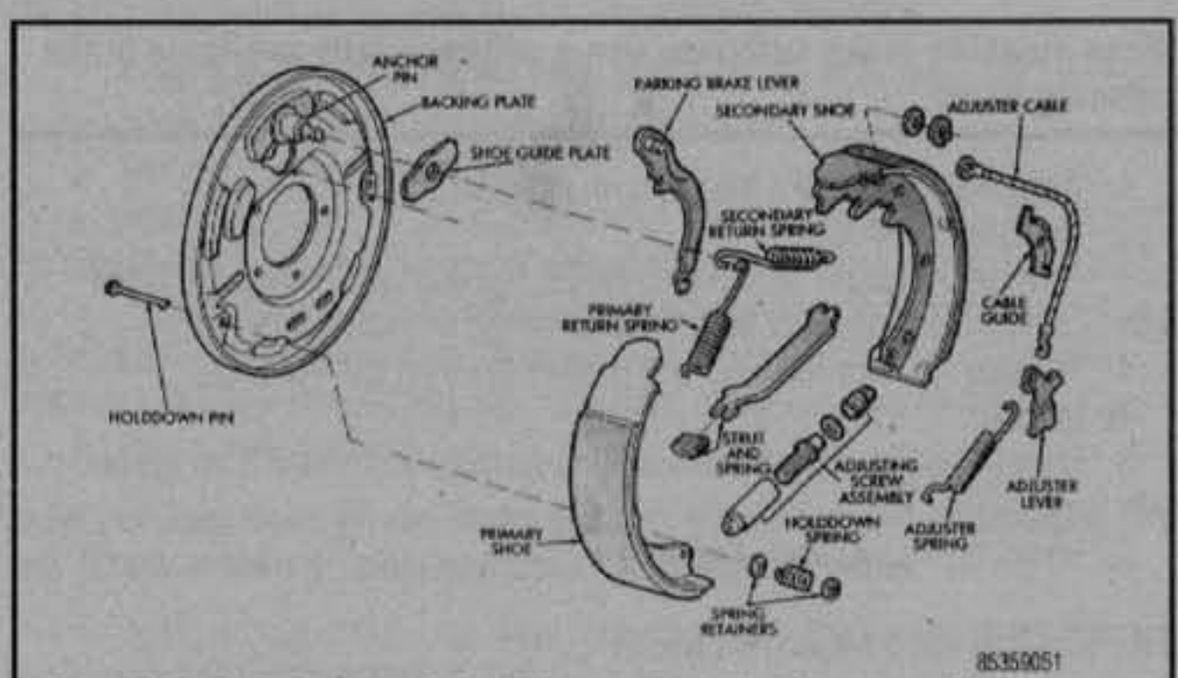

Fig. 48 Exploded view of the left rear drum brake assembly—1987–89

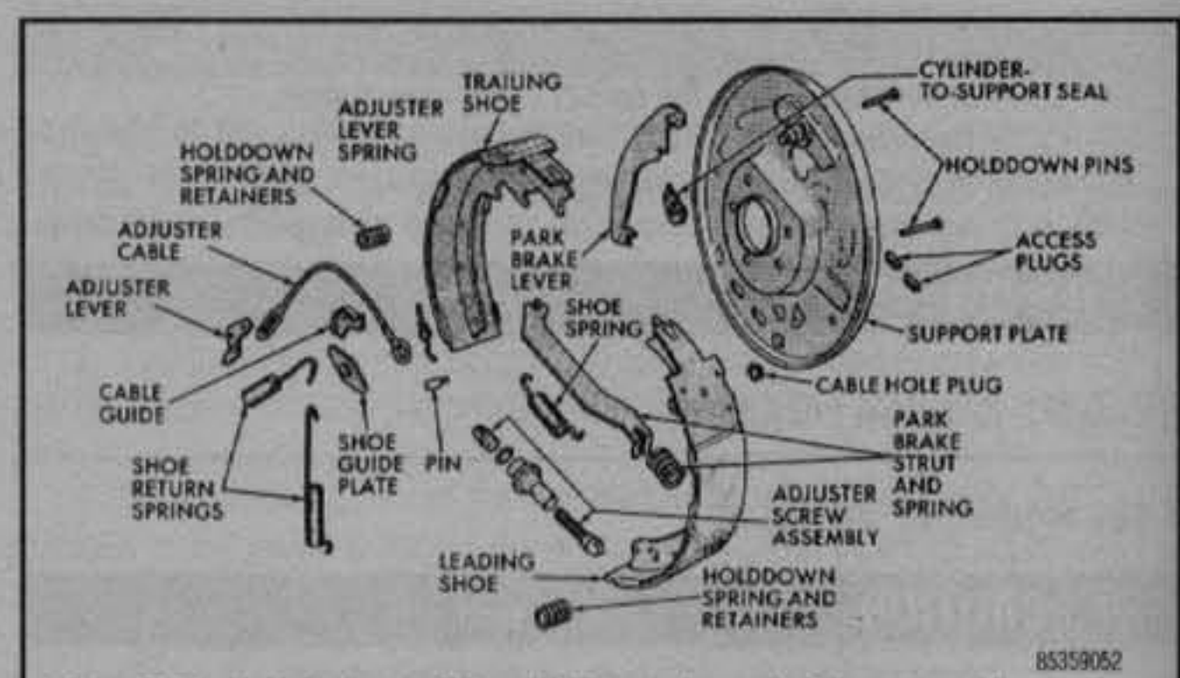

Fig. 49 Exploded view of the right rear drum brake assembly—1990–95

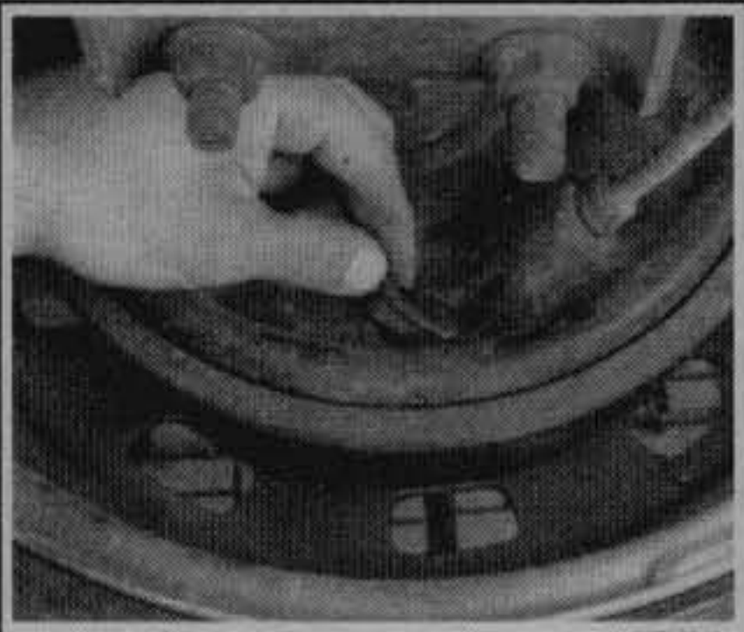

Fig. 50 Removing the adjuster access plug on the rear drum backing plate

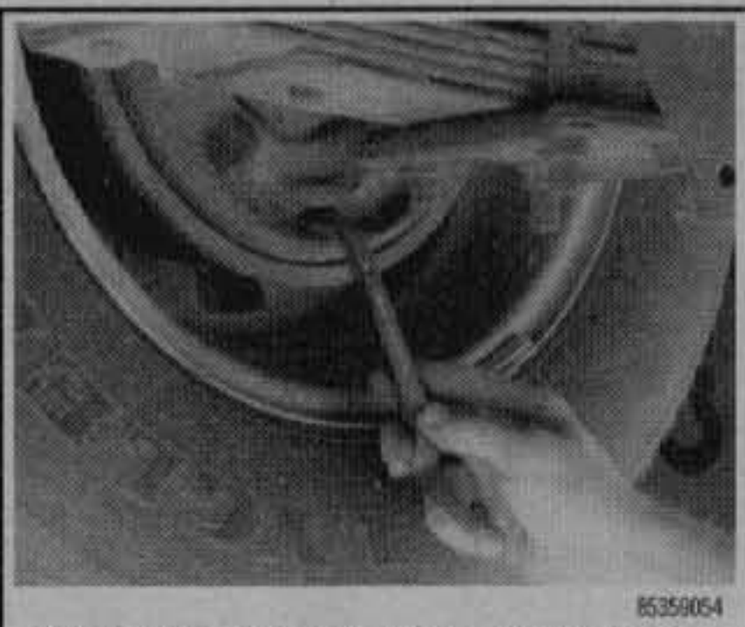

Fig. 51 Using an adjuster tool to back off the star wheel. This will allow the adjuster screw assembly and brake shoes to retract

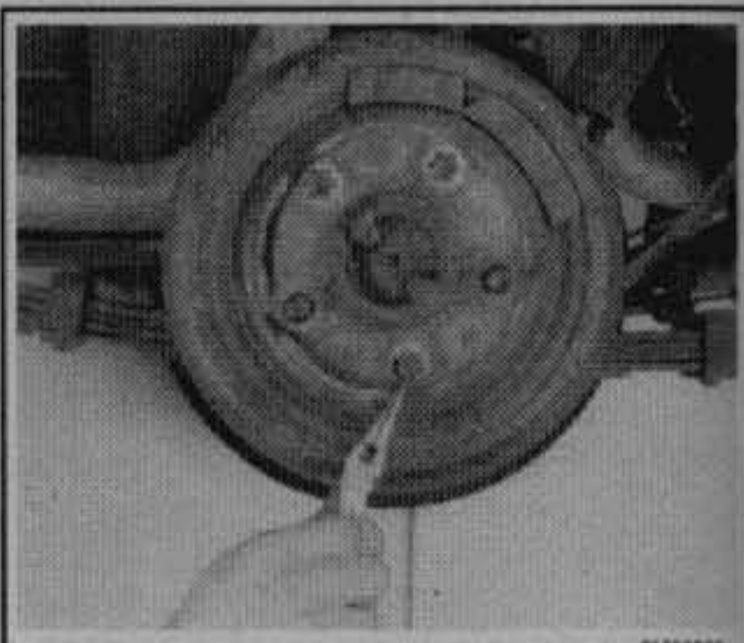

Fig. 52 Removing the drum retaining spring nuts

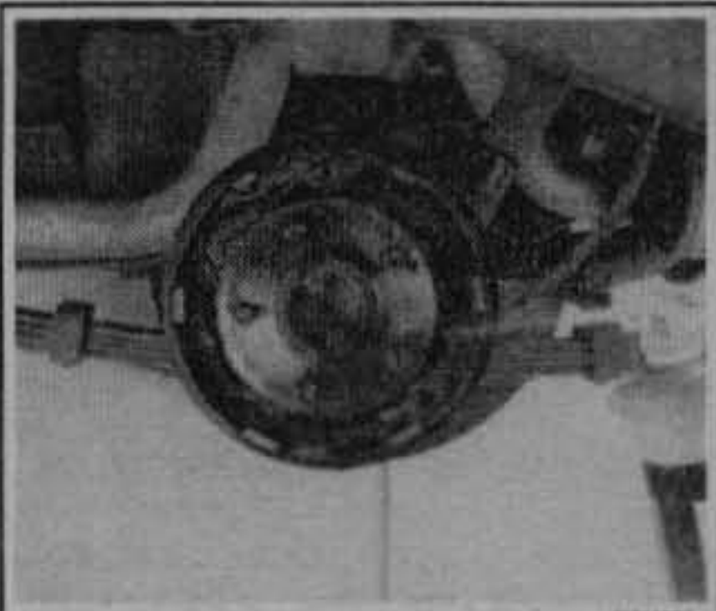

Fig. 53 It's a good idea to spray the brake assembly with a brake parts cleaner

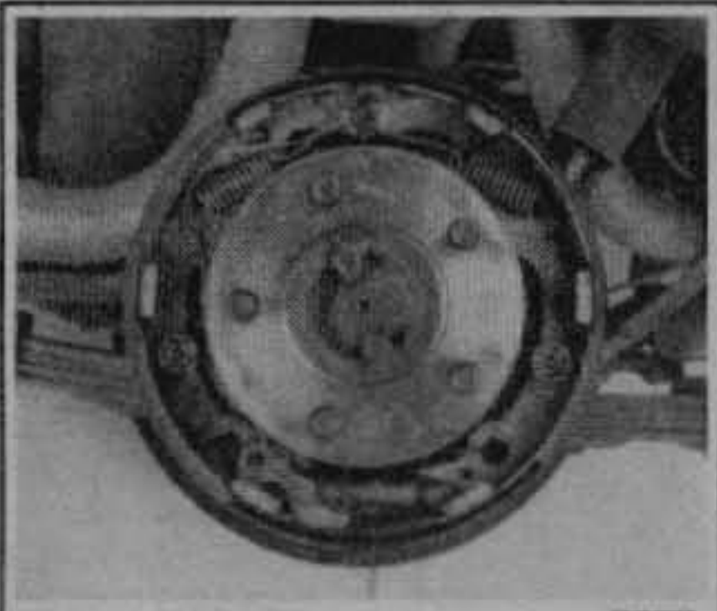

Fig. 54 Assembled view of the rear drum brake assembly

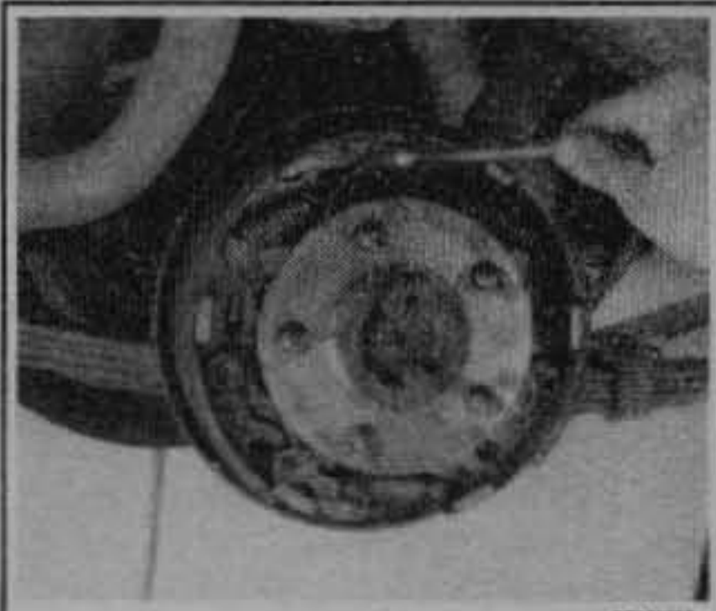

Fig. 55 Unhooking the return springs from the anchor pin using a spring remover tool

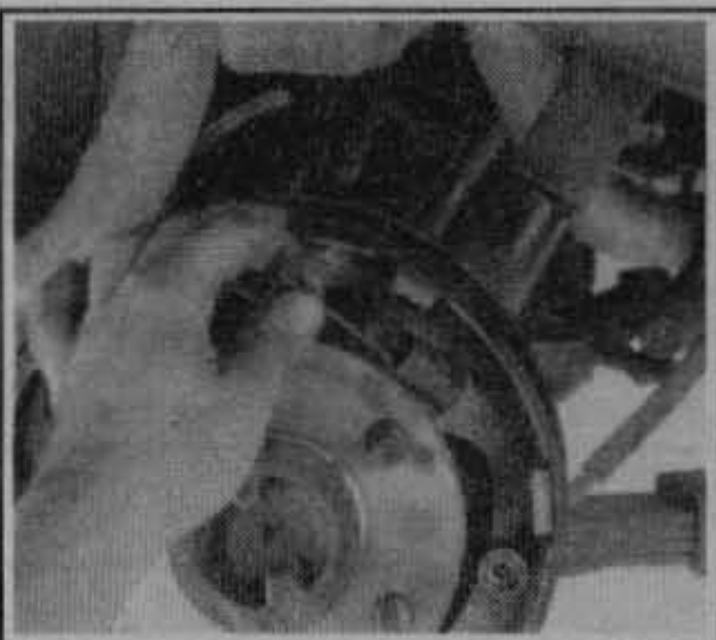

Fig. 56 Removing the return springs

Fig. 57 Removing the adjuster cable and cable guide from the anchor pin

Fig. 58 Removing the shoe guide plate from the anchor pin

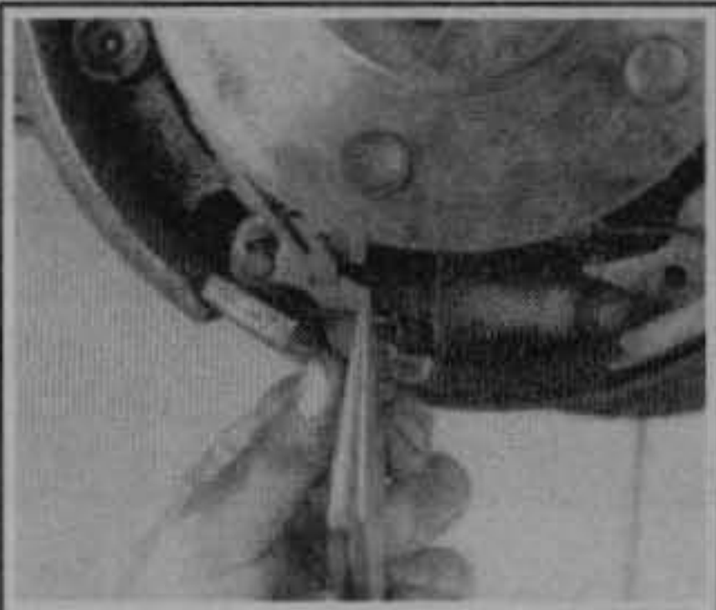

Fig. 59 Disconnecting the adjuster tension spring from the adjuster lever

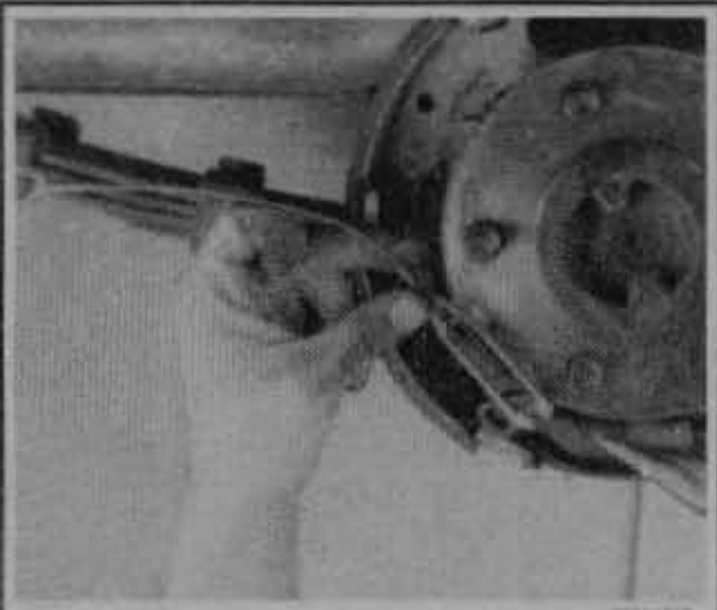

Fig. 60 Disconnecting the adjuster cable from the adjuster lever

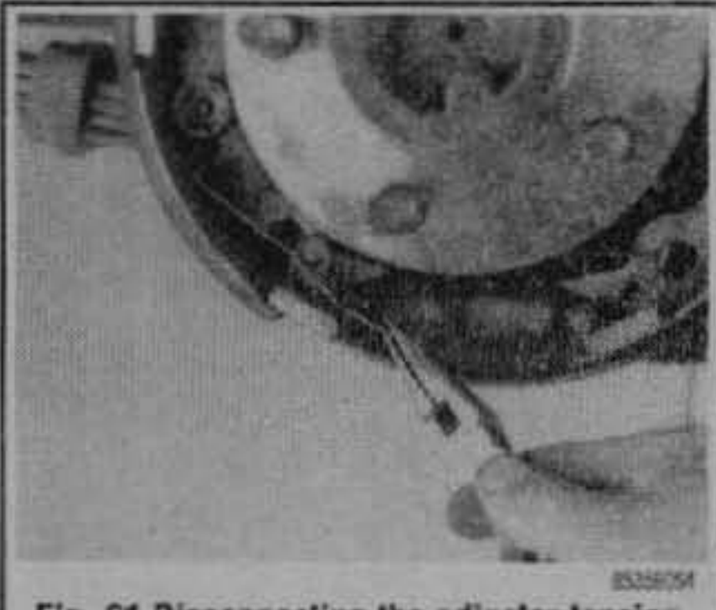

Fig. 61 Disconnecting the adjuster tension spring from the adjuster lever and brake shoe

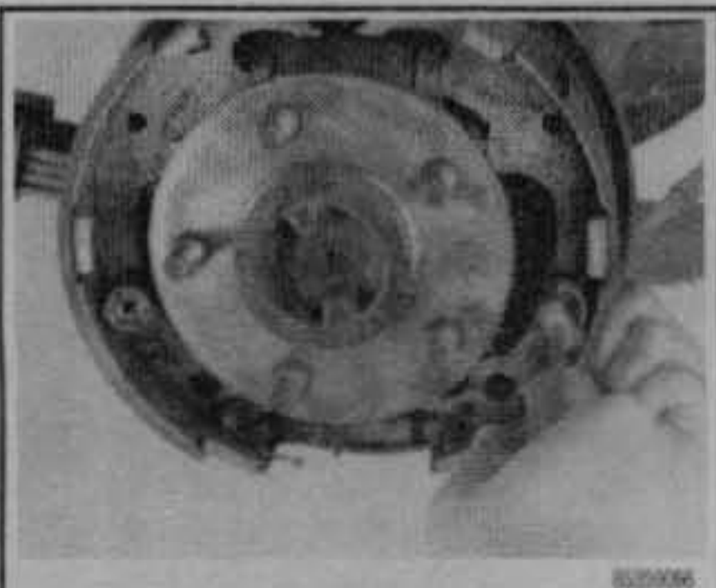

Fig. 62 Use a special brake tool to compress, turn and release the brake shoe hold-down springs

Fig. 63 Removing brake shoe hold-down spring retainers, springs and pins

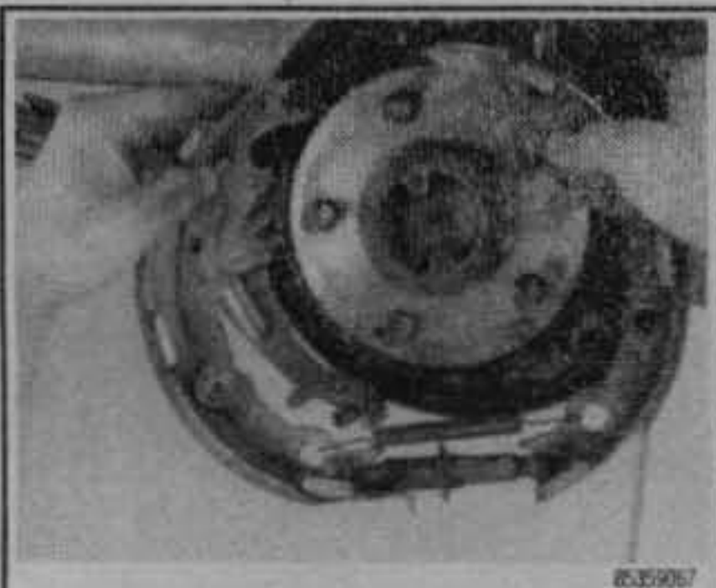

Fig. 64 With the adjuster and lower shoe spring intact, both shoes may be removed together

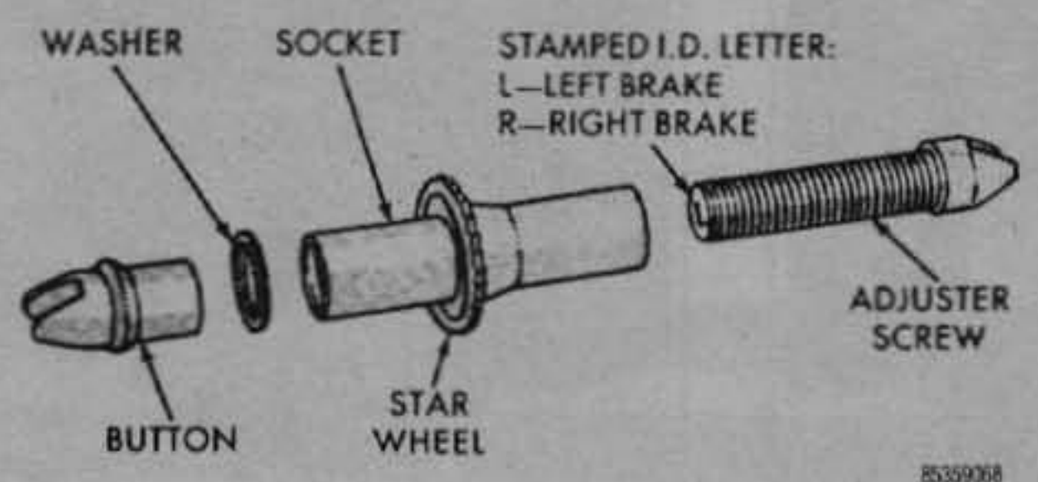

Fig. 65 Adjuster screw assembly components

2. Turn the adjuster screw's star wheel, so that the brake shoes are retracted from the brake drum.
3. Remove the wheels and brake drums to give access to the brake shoes.
4. Install wheel cylinder clamps to retain the wheel cylinder pistons in place and prevent leakage of brake fluid while replacing the shoes.
5. Remove the return springs with a brake spring remover tool.
6. Remove the adjuster cable, cable guide, adjuster lever and adjuster springs.
7. Remove the hold-down washers and springs, then remove the brake shoes.

To install:

8. Clean the backing plate with a brush or cloth. Place a dab of Lubriplate® on each spot where the brake shoes rub on the backing plate.

➡Always replace brake linings in axle sets. Never replace the linings on one side or on only one wheel.

9. Thoroughly clean the backing plate.
10. Apply a thin coat of multi-purpose chassis lube to the mounting pads on the backing plate.
11. Transfer the parking brake actuating lever to the new secondary shoe.
12. Position the brake shoes on the backing plate and install the hold-down springs. Don't forget to engage the parking brake lever with the cable.
13. Install the parking brake actuating bar and spring between the parking brake lever and primary shoe.
14. Install the self-adjusting cable, cable guide and upper return springs.
15. Thoroughly clean the adjuster screw assembly and lightly lubricate the threads with lithium based grease.
16. Install the adjuster screw assembly.
17. Install the self-adjusting cam and lower spring. A big pair of locking pliers is good for this job.
18. Check the surface of the brake shoes for any grease that may have gotten on them.
19. Install the drum and reach through the adjusting opening in the back plate with a brake adjusting tool. Turn the star wheel outward so that the brakes lock the drum, then, holding the adjusting cam with a thin screwdriver, turn the star wheel back so that the drum is free and no drag is felt.
20. Once the wheels are on and the vehicle is down, Back it up several times, applying the brakes to actuate the self-adjusters.

Wheel Cylinders

CAUTION

Brake shoes may contain asbestos, which has been determined to be a cancer causing agent. Never clean the brake surfaces with compressed air! Avoid inhaling any dust from any brake surface! When cleaning brake surfaces, use a commercially available brake cleaning fluid.

OVERHAUL

See Figures 66 thru 75

Wheel cylinder rebuilding kits are available for reconditioning wheel cylinders. The kits usually contain new cup springs, cylinder cups and in some, new

Fig. 66 Remove the outer boots from the wheel cylinder

Fig. 67 Compressed air can be used to remove the pistons and seals

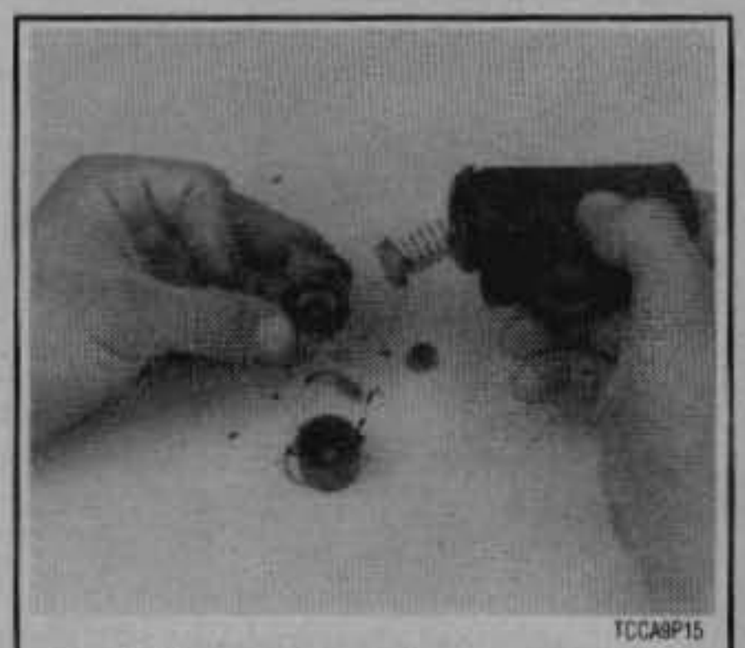

Fig. 68 Remove the pistons, cup seals and spring from the cylinder

Fig. 69 Use brake fluid and a soft brush to clean the pistons . . .

Fig. 70 . . . and the bore of the wheel cylinder

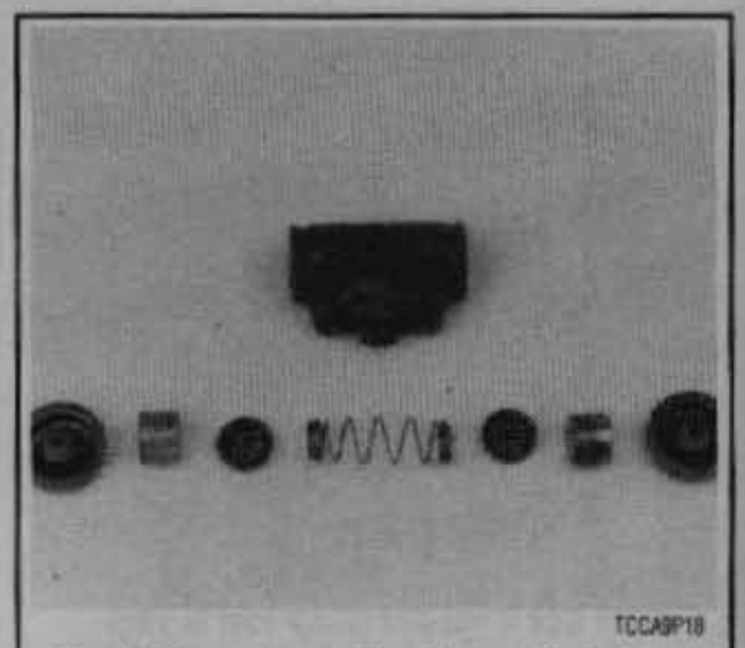

Fig. 71 Once cleaned and inspected, the wheel cylinder is ready for assembly

Fig. 72 Lubricate the cup seals with brake fluid

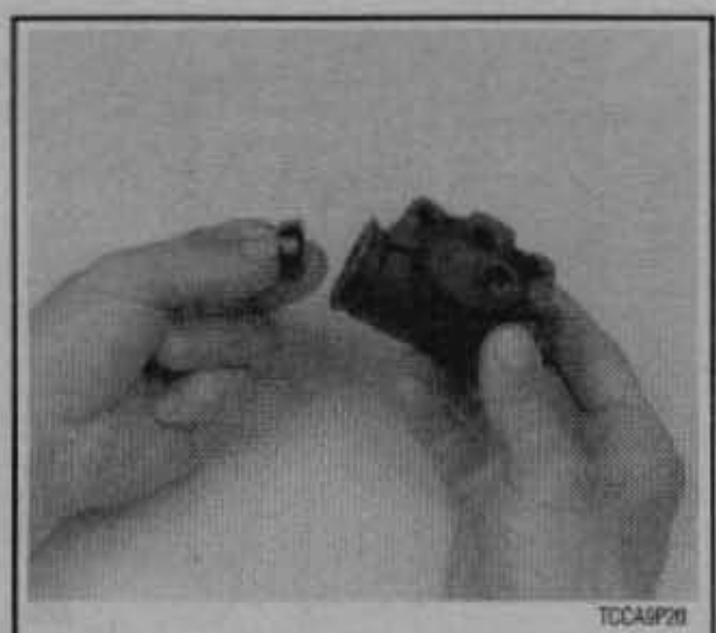

Fig. 73 Install the spring, then the cup seals in the bore

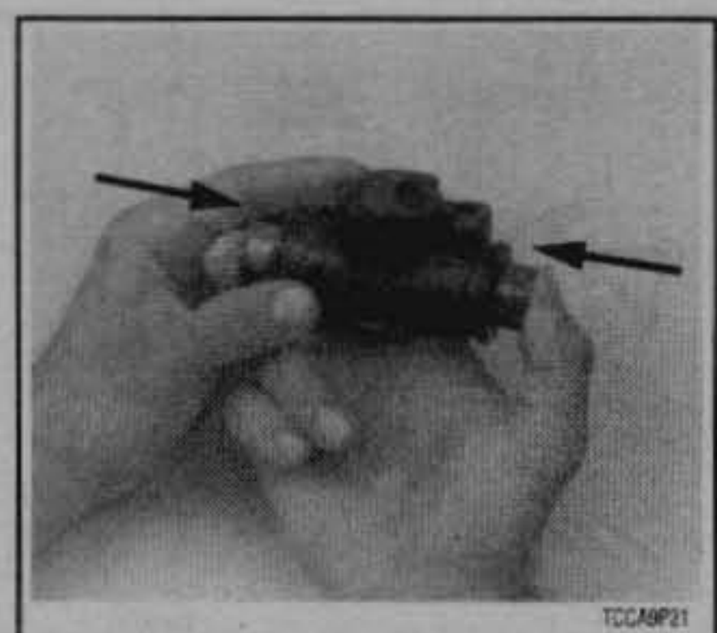

Fig. 74 Lightly lubricate the pistons, then install them

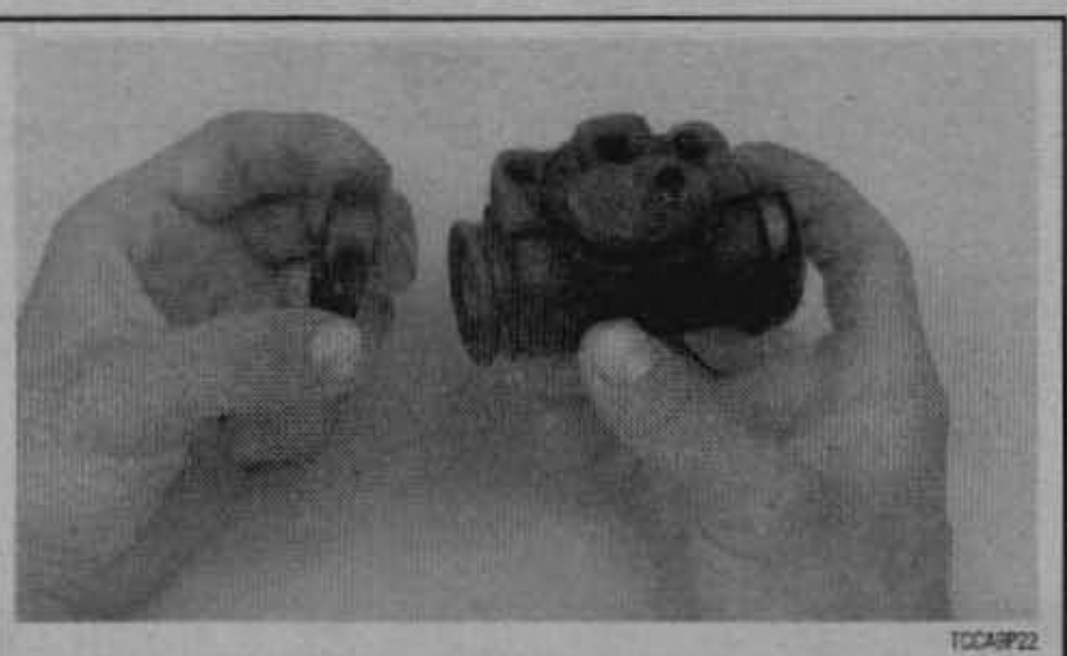

Fig. 75 The boots can now be installed over the wheel cylinder ends

boots. The most important factor to keep in mind when rebuilding wheel cylinders is cleanliness. Keep all dirt away from the wheel cylinders when you are reassembling them.

1. To remove the wheel cylinder, jack up the vehicle and remove the drum.
2. Disconnect the brake line at the fitting on the brake backing plate.
3. Remove the brake assemblies.
4. Remove the screws or nuts that hold the wheel cylinder to the backing plate and remove the wheel cylinder from the vehicle.
5. Remove the rubber dust covers on the ends of the cylinder. Remove the pistons and piston cups and the spring. Remove the bleeder screw and make sure it is not plugged.
6. Discard all of the parts that the rebuilding kit will replace.
7. Examine the inside of the cylinder. If it is severely rusted, pitted or scratched, then the cylinder must be replaced as the piston cups won't be able to seal against the walls of the cylinder.
8. Using emery cloth or crocus cloth, polish the inside of the cylinder. Do not polish in a lengthwise direction. Polish by rotating the wheel cylinder around the polishing cloth supported on your fingers. The purpose of this is to put a new surface on the inside of the cylinder. Keep the inside of the cylinder coated with brake fluid while polishing.

➡Honing the wheel cylinders is not recommended due to the possibility of removing too much material from the bore, making it too large to seal.

9. Wash out the cylinder with clean brake fluid after polishing.
10. When reassembling the cylinder dip all of the parts in clean brake fluid. Reassemble in the reverse order of removal. Torque the wheel cylinder-to-backing plate fasteners to 90 inch lbs. (10 Nm). Torque the brake line-to-wheel cylinder connection to 160 inch lbs. (18 Nm).

PARKING BRAKE

Cables

REMOVAL & INSTALLATION

Front Cable

▸ See Figures 76 and 77

1. Raise and safely support the vehicle.
2. Remove the equalizer nuts.
3. Disconnect the front cable at the equalizer.
4. Remove the cable-to-frame bracket clip.
5. Lower the vehicle.
6. Move the carpeting away from the pedal. Compress the clip that retains the cable to the pedal frame. A small hose clamp is good for this purpose.
7. Disconnect the cable from the pedal retainer and remove the cable.
8. Remove the grommet from the old cable and transfer it to the new cable.

To install:

9. Install the new cable in the floor pan and connect it to the pedal assembly.
10. Seat the cable grommet in the floor pan.
11. Raise and safely support the vehicle.
12. Install the cable-to-frame retaining clip.
13. Install the cable in the equalizer and install the equalizer washer and nuts.
14. Adjust the parking brakes as outlined in this section.

Rear Cables

▸ See Figures 78, 79 and 80

1. Raise and safely support the vehicle.
2. Loosen the equalizer nuts.
3. Detach the cables from any body clips.
4. Remove the wheel and brake drum.

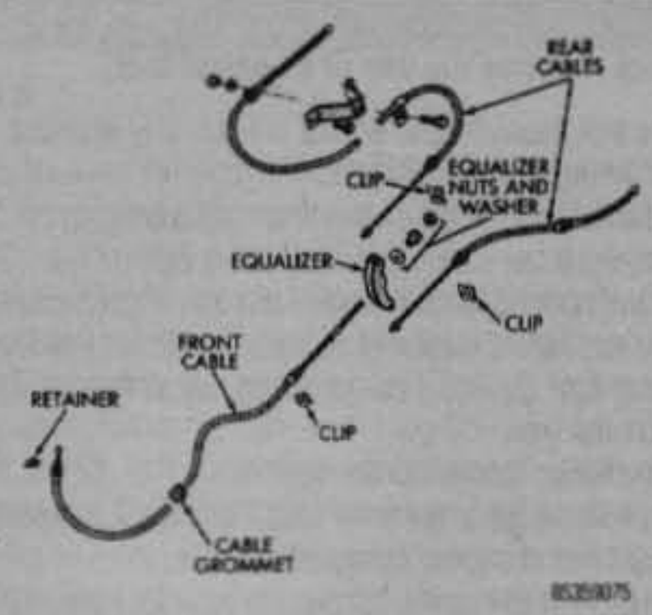

Fig. 76 Parking brake cables—1987–90

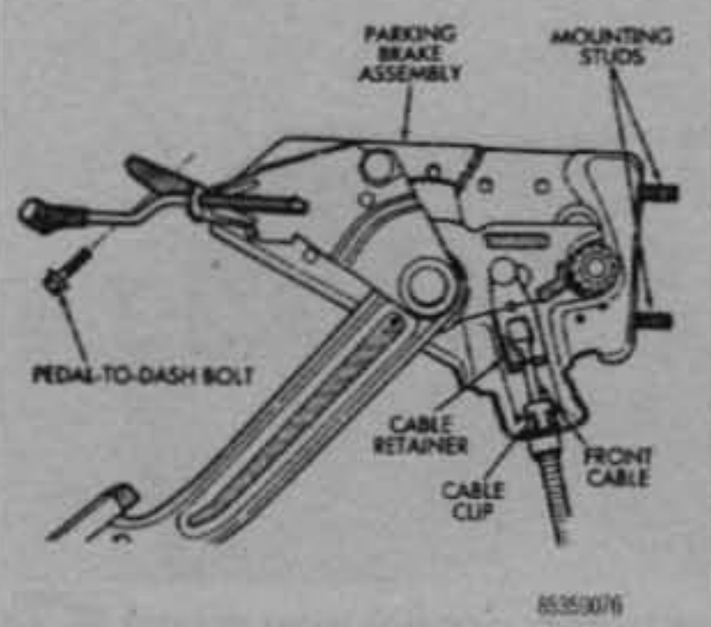

Fig. 77 Parking brake pedal assembly and cable attachment—1987–90

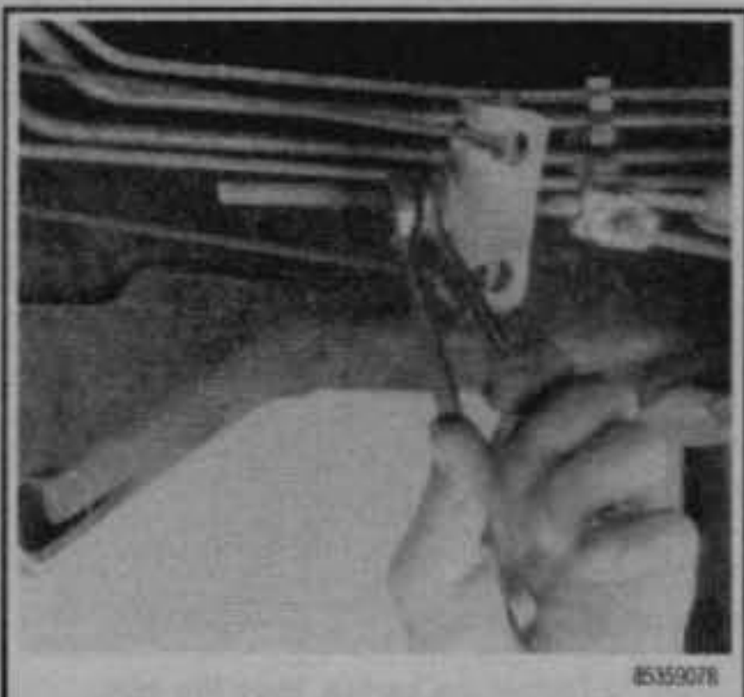

Fig. 78 Loosen the equalizer nuts

Fig. 79 Disconnecting the cable from the actuating lever

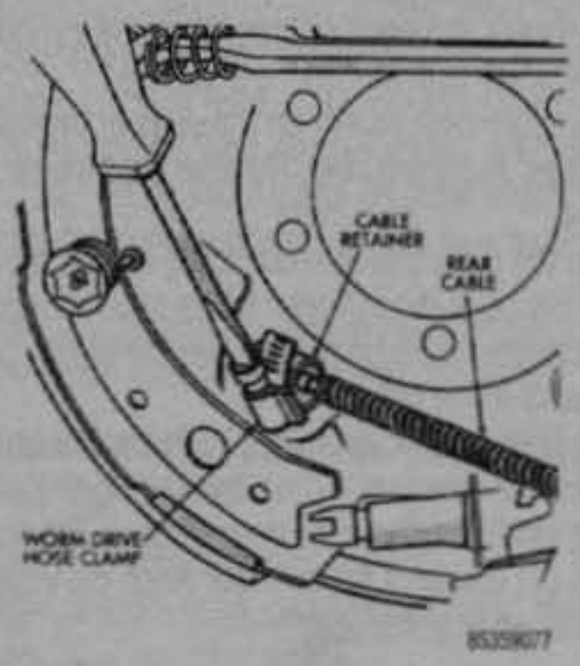

Fig. 80 Compressing the rear cable retainer

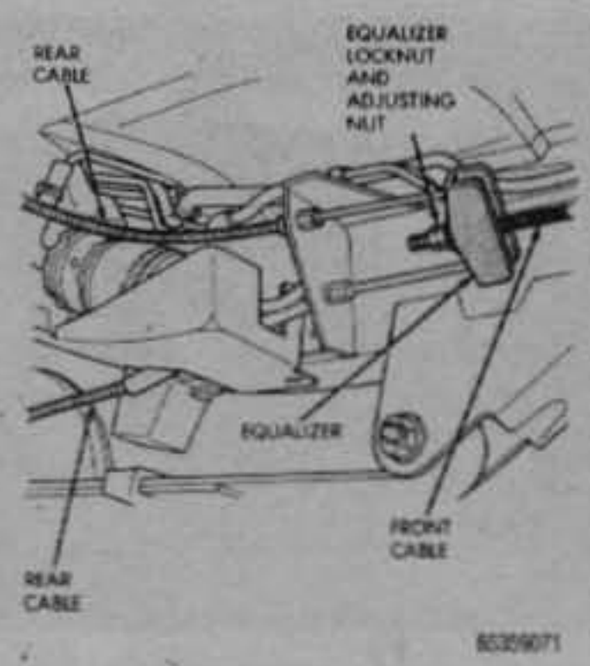

Fig. 81 Parking brake equalizer and cables—1987–90

5. Remove the secondary brake shoe and disconnect the cable ends at the actuating levers.
6. Compress the locking tabs that secure the cables to the backing plates with a hose clamp and slide the cable from the plates.

To install:

7. Install the new cable in the backing plate. Make sure the locking tabs are secure at the backing plate.
8. Install the secondary brake shoe.
9. Adjust the brake shoes to the drum and install the drum and wheel.
10. Install the cable in the equalizer. Secure the cable with the retainer and cotter pin.
11. Install the cable clips.
12. Adjust the parking brake.

ADJUSTMENT

1987–90 Vehicles

See Figures 81 and 82

This procedure requires the use of a special tool.

1. Make sure that the hydraulic brakes are properly adjusted. Fully apply and release the parking brake five times.
2. Raise and safely support the vehicle on jackstands.
3. Loosen the equalizer locknut and adjusting nut.
4. Using an inch pound torque wrench and adjustment adapter J-34651 or equivalent, apply and hold a torque of 50 inch lbs. (6 Nm) on the front cable.
5. If necessary, turn the equalizer adjusting nut so that the gauge pointer is in the OK band on the tool.
6. Remove the tools, then lower the vehicle.
7. Apply and release the brake lever fully, five times, and recheck the adjustment. If adjustment has changed, readjust the cable.
8. When adjustment is correct, tighten the locknut against the adjusting nut.

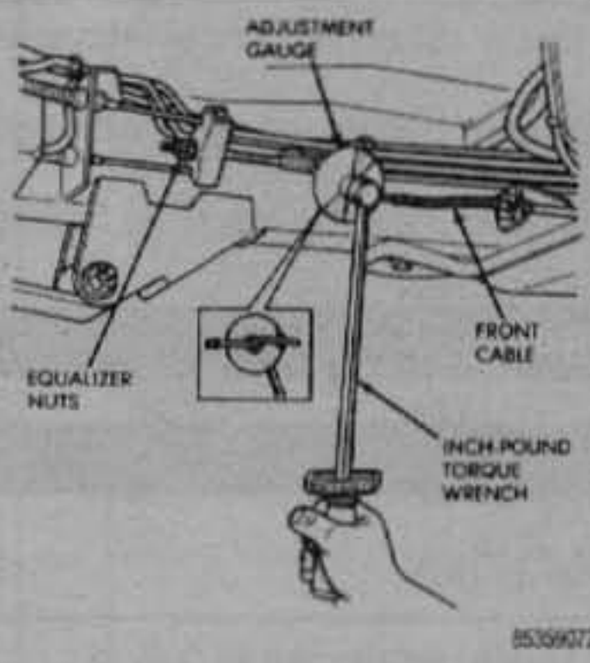

Fig. 82 Parking brake cable adjustment—1987–90

1991–93 Vehicles

See Figure 83

1. Adjust the rear brake shoes to drum clearance, if necessary.
2. Fully apply the parking brakes.
3. Raise and safely support the vehicle.
4. Loosen the front cable locknut.
5. Tighten the front cable adjusting nut approximately ½ inch (13mm). This will apply the necessary force to the front cable tensioner.
6. Hold the cable adjusting nut in position and tighten the cable locknut.
7. Lower the vehicle until the rear wheels are about 6–8 inches (15–20cm) off the floor.
8. Release the parking brake pedal and verify that the rear wheels rotate freely without drag.
9. Lower the vehicle.

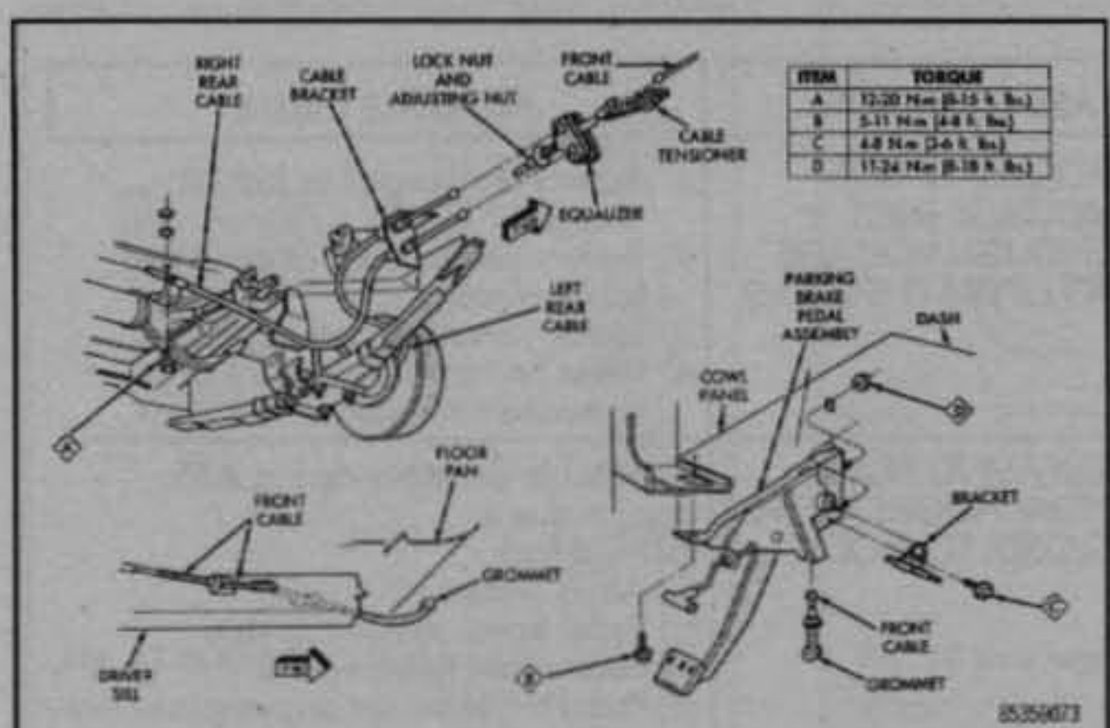

ITEM	TORQUE
A	12-20 N·m (8-15 ft. lbs.)
B	5-11 N·m (44 in. lbs.)
C	4.8 N·m (3-6 ft. lbs.)
D	11-24 N·m (8-18 ft. lbs.)

Fig. 83 Parking brake equalizer and cables—1991–95

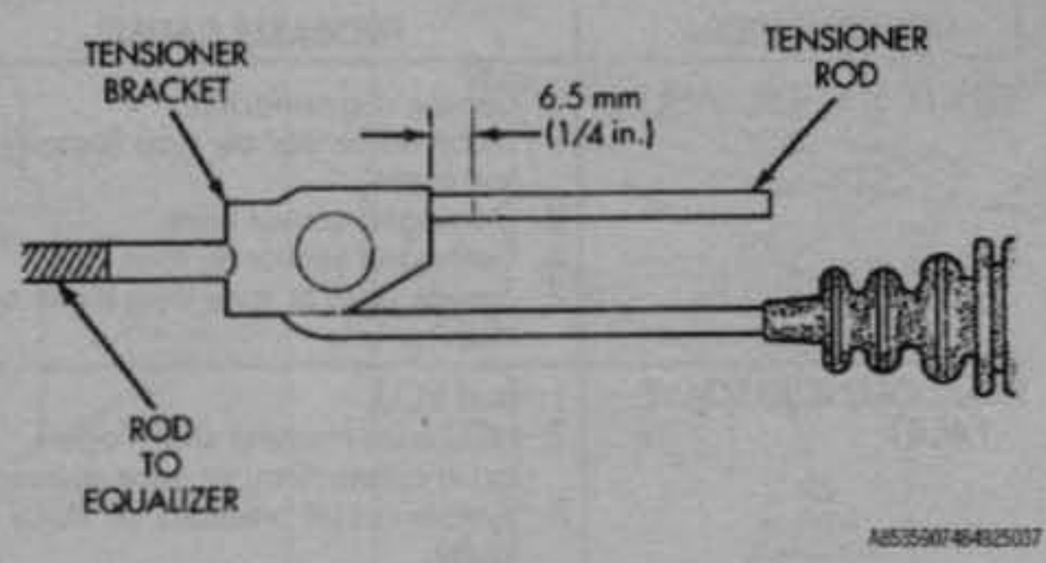

Fig. 84 Placing the adjustment mark on the tensioner rod—1994–95

1994–95 Vehicles

See Figures 83 and 84

Parking brake adjustment is only necessary when the tensioner, or a cable has been replaced or disconnected for service.

1. Raise and safely support the vehicle.
2. Back off the tensioner adjusting nut to create slack in the cables.
3. Remove the rear wheel/tire assemblies and remove the brake drums.
4. Check the rear brake shoe-to-drum adjustment.
5. Verify that there is no parking brake cable binding condition.
6. Reinstall the rear wheel/tire assemblies.
7. Lower the vehicle enough for access to the parking brake lever or foot pedal.
8. Fully apply the parking brakes.
9. Raise and safely support the vehicle again.
10. Mark the tensioner rod ¼ inches (6.5mm) from the tensioner bracket.
11. Tighten the adjusting nut at the equalizer until the mark on the tensioner rod moves into alignment.
12. Lower the vehicle until the rear wheels are about 6–8 inches (15–20cm) off the floor.
13. Release the parking brake pedal and verify that the rear wheels rotate freely without drag.
14. Lower the vehicle.

ANTI-LOCK BRAKE SYSTEM

Description and Operation

See Figure 85

The Teves Anti-lock Brake System (ABS) is an electronically operated, all wheel brake control system that became available on the Wrangler beginning in 1993. The major components include the master cylinder, vacuum power brake booster, Electronic Control Unit (ECU), Hydraulic Control Unit (HCU) and various control sensors.

The anti-lock system is designed to retard wheel lockup during periods of high wheel slip when braking. Retarding wheel lockup is accomplished by modulating fluid pressure to the wheel brake units.

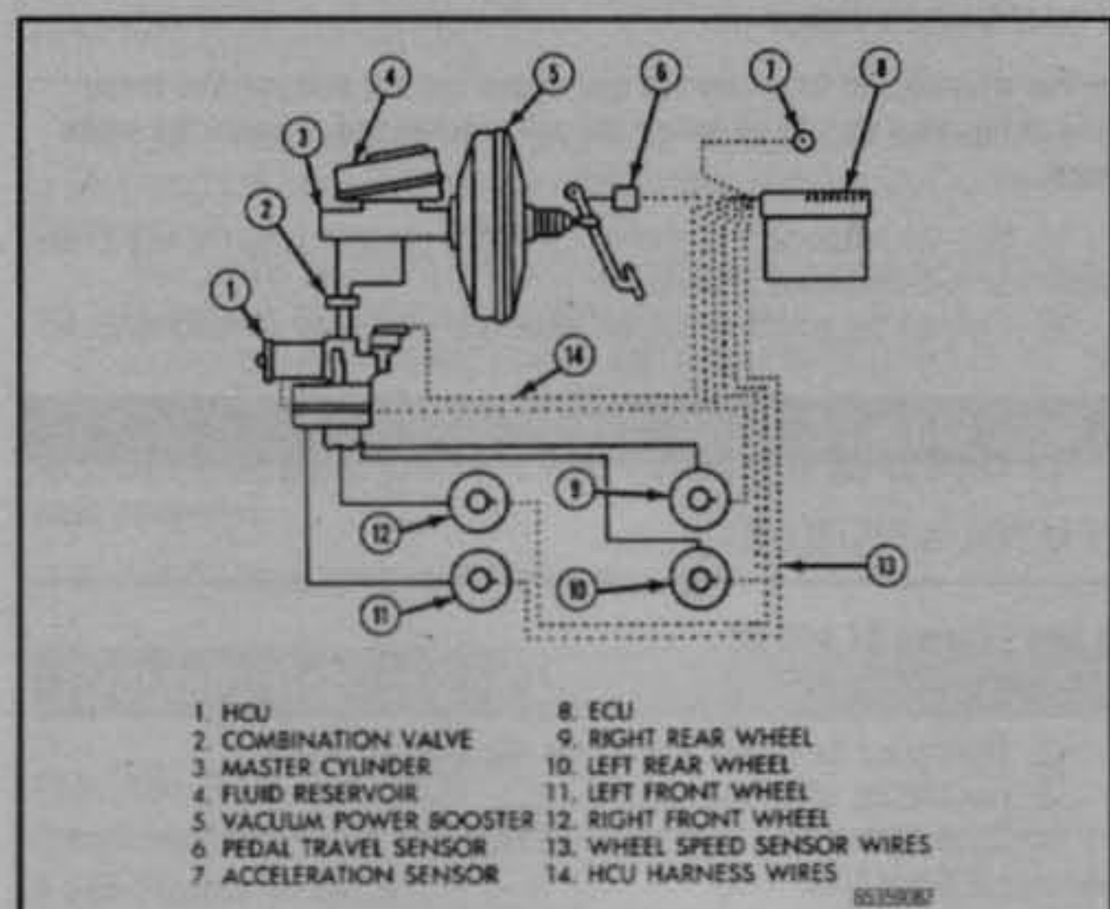

Fig. 85 Anti-lock brake system schematic

The ABS electronic control system is separate from other electrical circuits in the vehicle. A specially programmed ECU is used to operate the system components. The system components include the following:

- Electronic Control Unit (ECU)
- Wheel speed sensors and axle shaft tone rings
- Hydraulic Control Unit (HCU)
- Tandem master cylinder with central valves
- Vacuum power brake unit
- Pedal travel sensor
- Acceleration switch
- Main relay and pump motor relay
- ABS warning light
- Pump motor sensor

ABS components not repairable and are serviced as assemblies only. The axle shaft tone rings are not serviceable. If a tone ring becomes damaged, it will be necessary to replace the axle shaft.

Wheel brake components (such as the calipers, brake shoes, wheel cylinders, rotors and drums) are all serviced in the same manner as standard brake system components.

Diagnostic Procedures

See Figure 86

ABS diagnosis involves three basic steps. The first is observing the warning light display. Two warning lights are used and are visible in the instrument cluster. The standard brake system light is red and the anti-lock system light is amber. The amber ABS light is in a circuit with the ECU, and operates independently of the red brake light. The amber light indicates anti-lock system condition. It is in a circuit with the valve body solenoids and the main relay. The light flashes at start-up for self check, then goes out when the self-check program determines the system operation is normal. If an ABS fault code occurs either during the start-up self-check, or during normal operation, the amber light remains on until the fault is corrected.

The second step is a visual examination for low fluid, leaks, parking brakes applied or obvious damaged system components or wires.

The final diagnostic step involves the use of a Diagnostic Readout Box (DRB II) scan tool which is designed to determine the specific circuit or component at

ABS CONDITION	PROBABLE CAUSE
WHEEL SENSOR FAULT	1. Sensor disconnected. 2. Incorrect sensor air gap (usually too large). 3. Damaged sensor wire. 4. Damaged sensor or tone ring. 5. Sensor and/or tone ring loose or misaligned.
HCU SOLENOID VALVE FAULT	1. Bad ECU. 2. HCU wire harness short, open loose connection, or wire damage. 3. System circuit breakers (in PDC) faulty. 4. Relay fault.
PUMP MOTOR FAULT	1. Fuse or wire harness problem. 2. Relay malfunction. 3. Pump motor sensor malfunction. 4. Pedal travel sensor fault (short, open, mismatched). 5. Pump motor malfunction.
MAIN RELAY FAULT	1. Short or open in relay. 2. Short or open in relay wiring. 3. Inadequate feed voltage (less than 9 volts).
ABS LIGHT ON BUT NO FAULT CODE SET	1. ABS fuse blown. 2. Inadequate feed voltage to ECU (less than 9 volts). 3. ECU ground wire damage or loose connection. 4. Main relay inoperative.
INADEQUATE FEED VOLTAGE (NOT ENOUGH VOLTAGE TO OPERATE SYSTEM)	1. Battery discharged or low on charge. 2. Battery cables loose or corroded (at terminals). 3. Loose, corroded system ground. 4. Loose harness connections or corroded connections.
DECREASING BRAKE PEDAL HEIGHT (MOVES CLOSER TO FLOOR)	Noticeable decrease during ABS stops is due to: (a) Fluid leak. (b) Air in system. (c) Pedal travel sensor cap and booster are mismatched. (d) Pedal travel sensor or pump malfunction.
INCREASING BRAKE PEDAL HEIGHT, PUMP RUNS CONTINUOUSLY DURING ABS STOP (PEDAL FARTHER FROM FLOOR)	1. Pump motor wire harness problem (short, open, ground, loose, damaged). 2. Pedal travel sensor fault.
ACCELERATION SWITCH FAULT	1. Switch wires loose, damaged. 2. Switch malfunction. 3. Switch mounted upside down.

85359088

Fig. 86 ABS Fault Diagnosis Chart

fault. The tester consists of a small microcomputer and a cartridge containing all tests it must perform. The tester is connected to the ABS diagnostic connector, located at the driver's side of the center console, under the instrument panel, in the passenger compartment. Reference to the DRB II scan tool manual must be made for the test procedures. Initial faults should be cleared and the vehicle road tested to reset any faults that remain in the system. Fault codes can be cleared with the DRB II scan tool.

➡Except for the second diagnostic step (which involves a visual examination for low fluid, leaks, and obvious damage to system components or wires), diagnosing the ABS must be performed with the use of a Diagnostic Readout Box (DRB II) scan tool or its equivalent. This tool was specifically designed for this purpose and is recommended by Chrysler Corporation.

Refer to the ABS Fault Diagnosis Chart as a guide for potential system faults.

Front Wheel Sensor

REMOVAL & INSTALLATION

1. Raise and safely support the vehicle. Turn the front wheel outward for easier access to the sensor.
2. Before disassembly, note sensor wire routing including location of all clips and retainers. The sensor wire must be routed correctly during reassembly to avoid damage from moving parts.
3. Carefully remove the sensor wire from the mounting brackets.
4. If the sensor is coated with mud, slush, etc., clean the sensor and surrounding area. This will prevent damage to the sensor and tone wheel during removal.
5. Remove the sensor attaching bolt and remove the sensor from the steering knuckle.
6. Loosen the grommet holding the sensor wire from the wheel arch panel.
7. In the engine compartment, disconnect the sensor wire connector from the ABS harness. Carefully remove the sensor and harness from the vehicle.

To install:

8. Apply Loctite® 242 or equivalent, to the sensor attaching bolt. Replace the original bolt if worn or damaged.
9. Position the sensor on the steering knuckle and install the attaching bolt finger tight.
10. Hold the sensor in this position and tighten the retaining bolt to 11 ft. lbs (14 Nm).
11. Attach the sensor wire to the steering knuckle bracket with grommets on the sensor wire.
12. Route the sensor wire to the outer sill bracket. Make sure it is not twisted or kinked.
13. Attach the sensor wire to the outer sill bracket with grommet. Make sure it is not twisted or kinked.

➡The wire should loop forward and above the sill bracket; the loose end of the wire should be below the sill bracket and towards the brake hose.

14. Seat the sensor wire grommet in the body panel and clip the wire to the brake line at the grommet location.
15. Connect the sensor wire to the harness in the engine compartment.

Rear Wheel Sensor

REMOVAL & INSTALLATION

• See Figures 87 and 88

1. Raise and safely support the vehicle.
2. Disconnect the sensor wires at the rear axle connectors.
3. Remove the wheel and brake drum.
4. Carefully remove the clips holding the sensor wires to the brake lines or rear axle and rear brake hose.
5. Loosen or unseat the backing plate grommet holding the sensor wire.
6. Remove the bolt holding the sensor to the bracket. Remove the sensor by pulling the wire through the grommet hole in the backing plate.

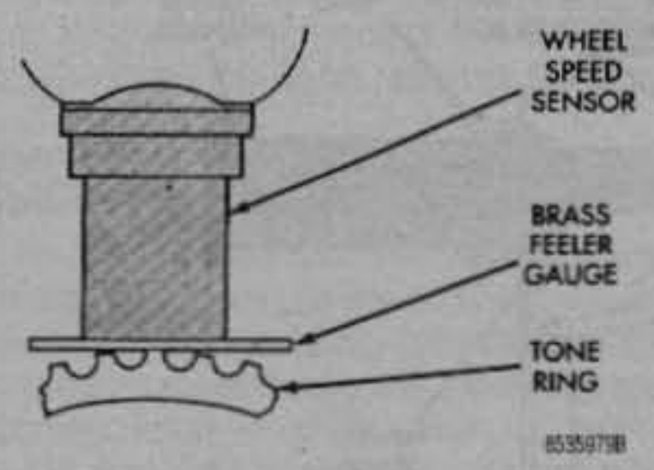

Fig. 87 Setting the air gap on the original rear sensor

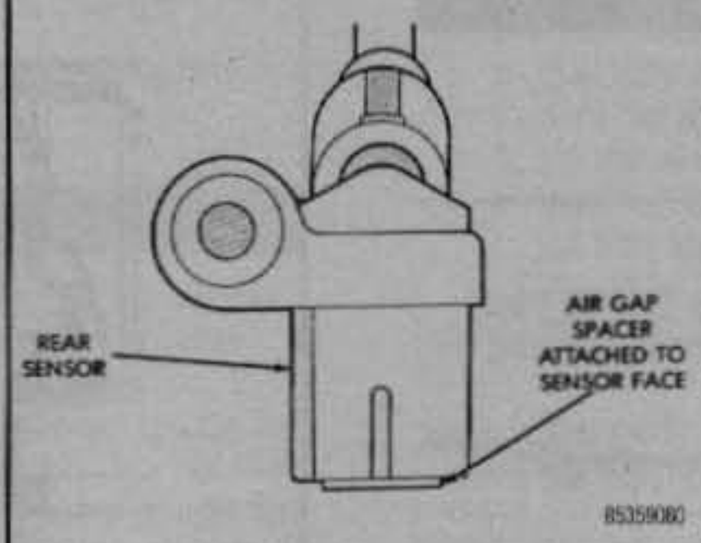

Fig. 88 New rear sensor with air gap spacer

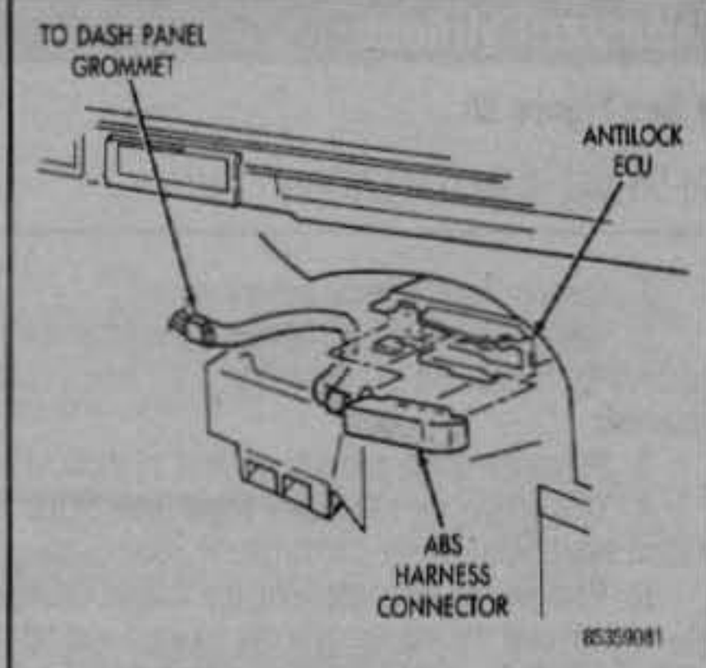

Fig. 89 ECU location

To install:

7. Feed the sensor wire through the grommet hole in the backing plate and seat the grommet in the plate.
8. Apply Loctite® 242 or equivalent, to the sensor attaching bolt. Replace the original bolt if worn or damaged.
9. Install the attaching bolt finger tight at this time.
10. Set the sensor air gap as follows:
   a. If the original sensor is being installed, remove any remaining pieces of cardboard spacer from the sensor pickup face. After the sensor is loosely held in position by the retaining bolt, use a brass feeler gauge to set the air gap from the sensor to the tone ring. Correct air gap is 0.043 in. (1.1mm). Tighten the retaining bolt to 11 ft. lbs. (14 Nm) and recheck the air gap with the feeler gauge.
   b. If a new sensor is being installed, push the cardboard spacer on the sensor face, against the tone ring. Tighten the retaining bolt to 6 ft. lbs. (8 Nm). Correct air gap will be established as the tone ring rotates and peels the spacer off the sensor face.
   c. Verify sensor air gap adjustment. If adjustment has changed after tightening the bolt, readjust the air gap as needed.
11. Connect the sensor wires to the connectors at the rear axle and feed through the access hole. Seat the sensor wire grommets in the floorpan.
12. Make sure the sensor wiring is secured to the brake lines and rear axle with clips. Make certain that the wiring is clear of all moving and/or hot components.
13. Install the brake drum and wheel. Lower the vehicle to the ground.

Electronic Control Unit (ECU)

See Figure 89

REMOVAL & INSTALLATION

The ECU is attached to the dash panel inside the passenger compartment. It is positioned just above the heater/air conditioner plenum housing, inline with the glove box.

1. From inside the engine compartment, loosen and remove the ECU retaining bolts and nuts, located just to the right of the battery.
2. Disconnect the ECU wiring harness, then remove the ECU from the vehicle.

If equipped with air conditioning, it will be necessary to remove the air conditioning fascia panel and ducts for access to the ECU and harness connector.

3. Installation is the reverse of removal.

Hydraulic Control Unit (HCU)

REMOVAL & INSTALLATION

See Figures 90 and 91

1. Place shop towels or a small container under the master cylinder reservoir hoses and disconnect those hoses at the HCU.

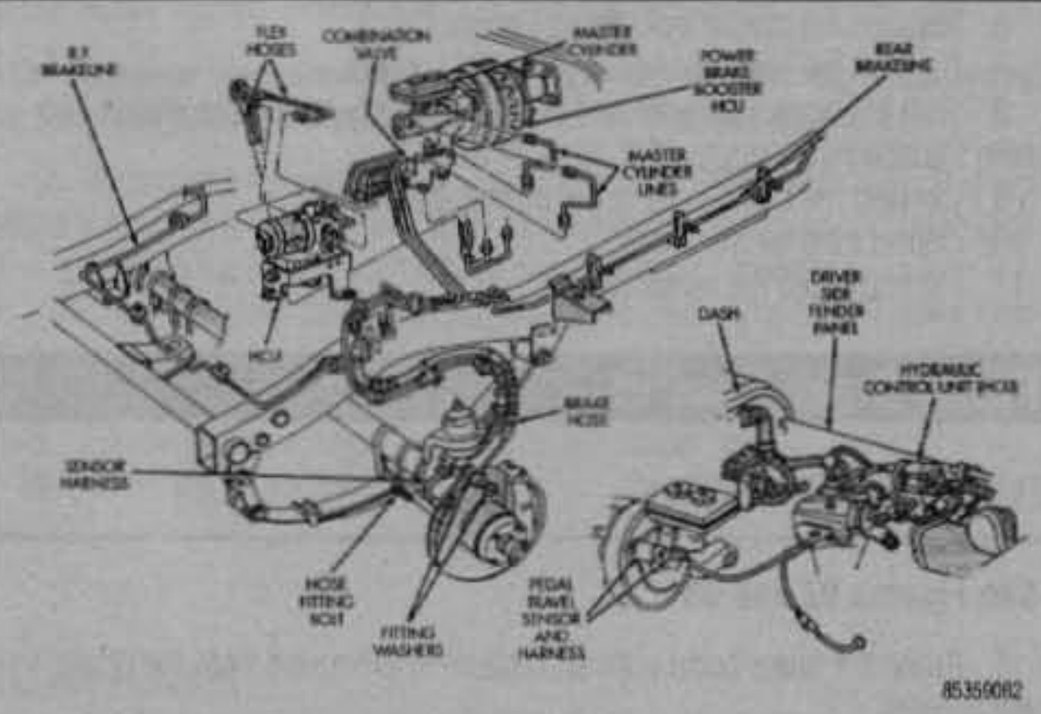

Fig. 90 ABS hydraulic component locations

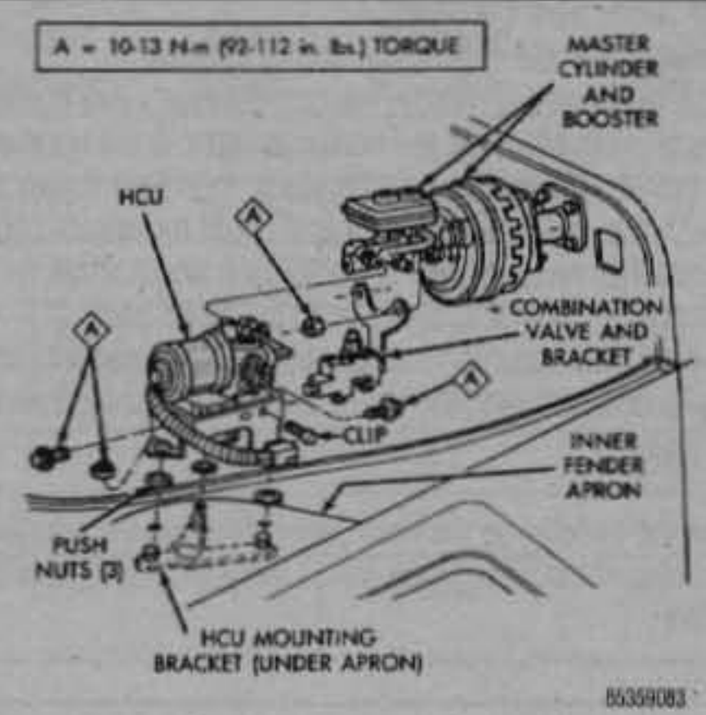

Fig. 91 HCU mounting

2. Disconnect all sensor and harness wires at the HCU.
3. Mark or tag or installation reference, then disconnect the brake lines at the ECU.
4. Remove the bolt and nuts attaching the HCU mounting bracket to the fender apron and remove the HCU.

To install:

5. Position the HCU mounting bracket to the fender apron and install the bolt and nuts.
6. Connect the brake lines to the ECU.
7. Connect all sensor and harness wires to the HCU.
8. Connect the master cylinder reservoir hoses to the HCU.
9. Fill and bleed the brake system.

Master Cylinder

See Figure 90

REMOVAL & INSTALLATION

1. Disconnect the pedal sensor wires.
2. Remove the clamps that attach the reservoir hoses to the HCU pipes, remove the hoses and allow them to drain into a container before removing the reservoir.
3. Pump the brake pedal to exhaust all vacuum from the power brake booster.
4. Disconnect the necessary brake lines at the master cylinder and combination valve. Remove the combination valve bracket bolt.
5. Remove the nuts attaching the master cylinder to the booster mounting studs, then pull the master cylinder forward and off the studs.

To install:

If a new master cylinder is being installed, bleed the cylinder on a bench before installation.

6. Position the master cylinder to the booster.
7. Connect the reservoir hoses to the HCU pipes.
8. With the master cylinder and booster properly connected, install and tighten the attaching nuts to 25 ft. lbs. (34 Nm).
9. Connect the brake lines to the master cylinder.
10. Connect the sensor wires.
11. Fill and bleed the brake system.

Power Brake Booster

REMOVAL & INSTALLATION

See Figures 92 and 93

1. Pump the brake pedal until all vacuum is exhausted from the power brake booster.
2. Disconnect the pedal travel sensor.
3. Remove the air cleaner and hoses.
4. Remove the clamps that secure the reservoir hoses to the HCU pipes, then remove the hoses from the pipes.
5. Disconnect the brake lines at the master cylinder.
6. It may be necessary to remove the combination valve bracket bolt.
7. Remove the nuts attaching the master cylinder to the booster mounting studs. Pull the cylinder forward and off the studs, then work it past the combination valve, brake lines, pedal travel sensor and out of the engine compartment.
8. Disconnect the vacuum hose at the booster check valve.
9. Disconnect the booster pushrod from the brake pedal.
10. Remove the nuts attaching the booster to the passenger compartment side of the engine compartment, then slide the booster forward and out of the engine compartment.

To install:

11. Position the booster on the dash panel, aligning the booster mounting studs with the holes in the panel, then install the attaching nuts and tighten to 30 ft. lbs. (41 Nm).

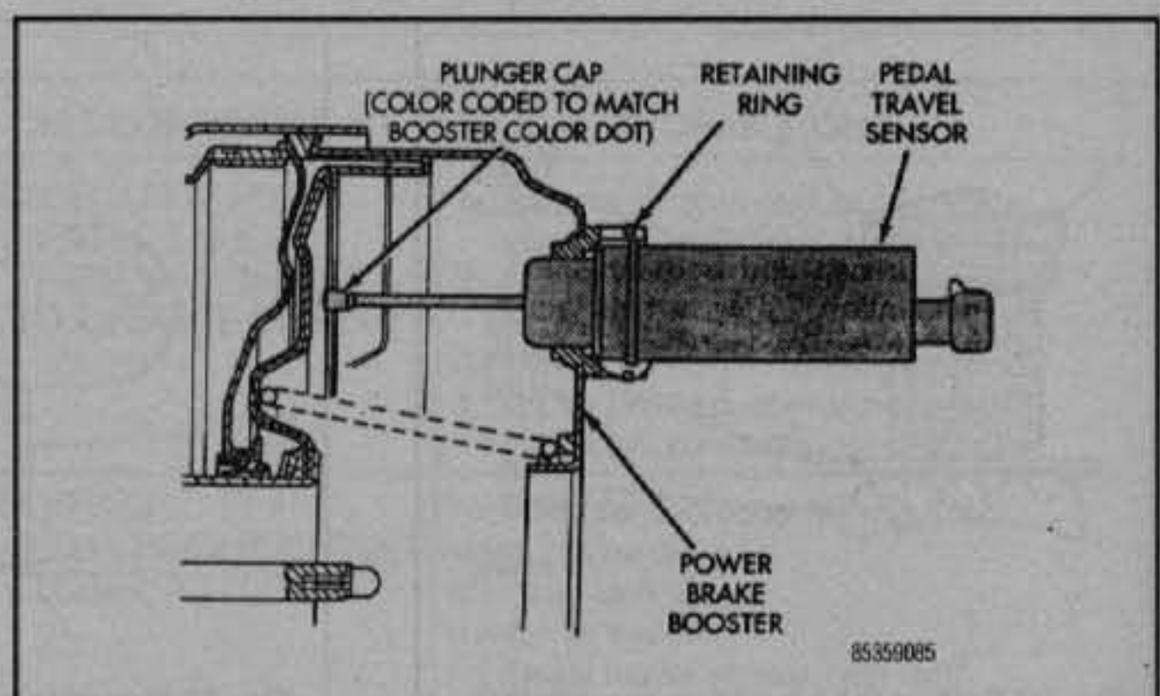

Fig. 93 Brake pedal sensor mounting—with ABS

12. Install the seal on the master cylinder.
13. If installing a new pedal travel sensor on the original booster, the color dot on the booster shell must be the same as the color of the cap on the sensor. If the colors do not match, select the color cap from the kit supplied with the new sensor and install it on the end of the sensor plunger.

➡The cap on the sensor plunger and the dot on the shell are color coded for identification, to ensure they are used as matched sets.

14. Install the O-ring on the pedal travel sensor.
15. Install and firmly seat the sensor retaining ring on the booster flange.
16. Insert the sensor into the booster, making sure it is firmly seated and engaged in the retaining ring.
17. Connect the booster pushrod to the brake pedal.
18. Connect the vacuum hose at the booster check valve.
19. Install the master cylinder to the booster mounting studs. and tighten the nuts to 220–267 inch lbs. (25–30 Nm).
20. Connect the brake lines to the master cylinder.
21. Install the combination valve bracket bolt, if removed.
22. Install the clamps and secure the reservoir hoses to the HCU pipes.
23. Connect the pedal travel sensor wires.
24. Bleed the brakes as outlined in the ABS portion of this section.
25. Install the air cleaner and hoses.

Combination Valve

REMOVAL & INSTALLATION

See Figure 94

The valve is located on the left fender panel just below the master cylinder.

1. Disconnect the harness wires from the combination valve switch.
2. Disconnect the brake lines at the valve and plug them.

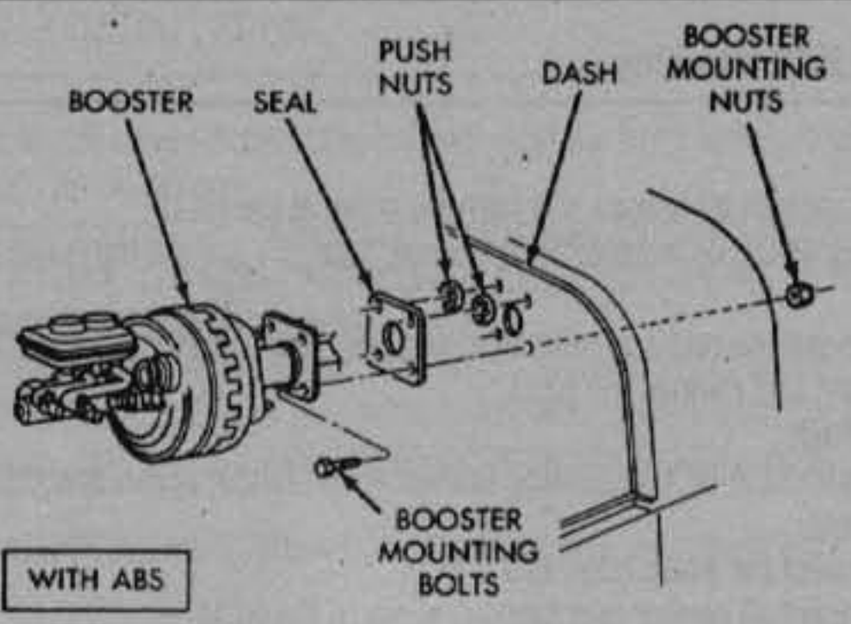

Fig. 92 Power brake booster mounting—with ABS

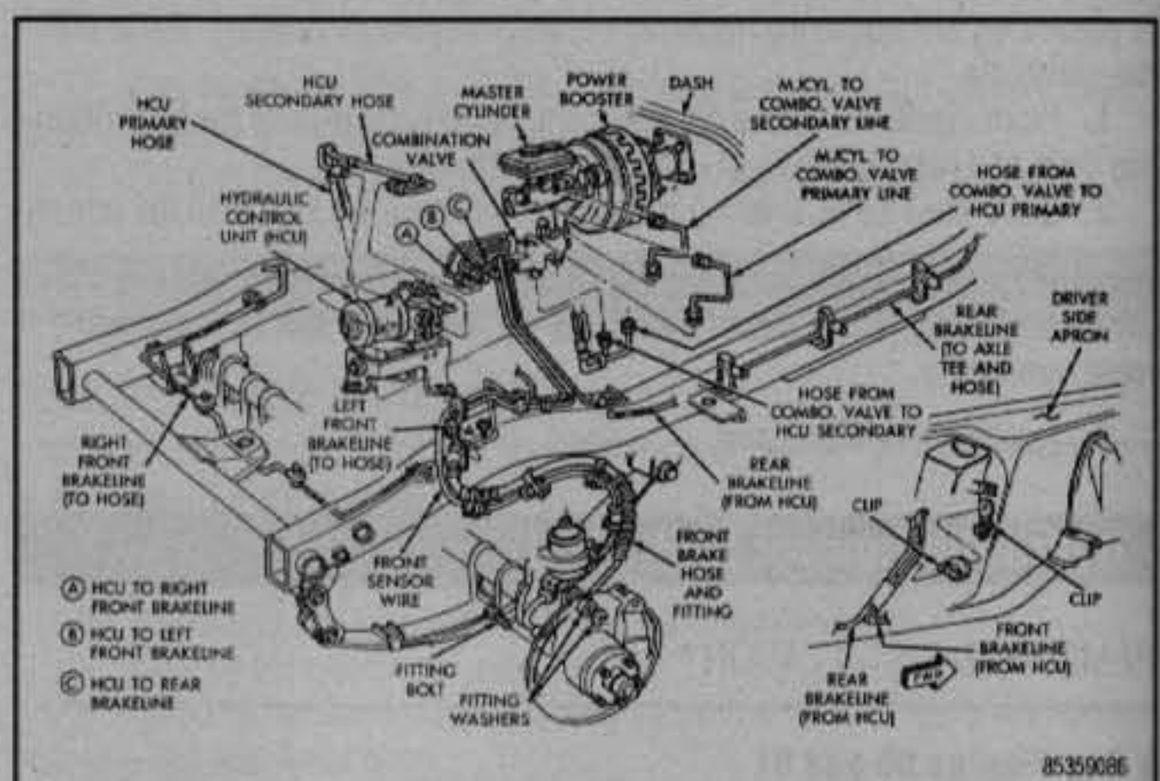

Fig. 94 Front brake line routing and combination/proportioning valve location—with ABS

3. Remove the nuts attaching the valve to the master cylinder mounting studs and remove the valve and bracket as an assembly.

4. Installation is the reverse of removal. Tighten the valve retaining nuts to 92–112 inch lbs. (10–13 Nm.) Bleed the brake system.

ABS Bleeding

The hydraulic brake system must be bled whenever a fluid line has been disconnected because air gets into the system. A leak in the system may sometimes be indicated by a spongy brake pedal. Air trapped in the system is compressible and does not permit the pressure applied to the brake pedal to be transmitted solidly through the brakes. The system must be absolutely free from air at all times. If the master cylinder has been overhauled or a new cylinder has been installed, bleed the cylinder on a bench before installation. When bleeding brakes, bleed at the wheel most distant from the master cylinder first, the next most distant second, and so on. During the bleeding operation the master cylinder must be kept at least ¾ full of brake fluid.

The ABS bleeding procedure is different from the conventional method. It consists of the following three steps:

Step 1: Conventional manual brake bleed.

Step 2: Bleeding the system using the DRB scan tool.

Step 3: An additional conventional manual brake bleed.

The recommended ABS bleeding procedure is as follows:

1. To bleed the brakes, first carefully clean all dirt from around the master cylinder filler cap. Remove the filler cap and fill the master cylinder with DOT 3 brake fluid to the lower edge of the filler neck.

2. Bleed the master cylinder first. Have a helper operate the brake pedal while bleeding each master cylinder fluid outlet line. Do not allow the master cylinder to to run out of fluid,as this will allow additional air to be drawn into the cylinder.

3. Bleed the brake system in the following sequence:
   a. Master cylinder
   b. HCU valve body (at fluid lines)
   c. Right rear wheel
   d. Left rear wheel
   e. Right front wheel
   f. Left front wheel

4. Clean off the bleeder connections at all four wheel cylinders. Attach the bleeder hose to the right rear wheel cylinder bleeder screw and place the end of the tube in a glass jar, submerged in brake fluid.

5. Open the bleeder valve ½–¾ of a turn.

6. Have an assistant depress the brake pedal slowly and allow it to return. Continue this pumping action to force any air out of the system. When bubbles cease to appear at the end of the bleeder hose, close the bleeder valve and remove the hose.

7. Check the level of fluid in the master cylinder reservoir and replenish as necessary.

8. After the bleeding operation at each wheel cylinder has been completed, fill the master cylinder reservoir and replace the filler plug.

➡Do not reuse the fluid which has been removed from the lines through the bleeding process because it contains air bubbles and dirt.

9. Perform the "Bleed Brake" procedure with the DRB II scan tool. This procedure is described in the DRB II software information and diagnostic manual.
   a. Attach the DRB II scan tool to the diagnostic connector.
   b. Run the Bleed Brake procedure as described in the DRB II tester manual.

10. Repeat the conventional bleeding procedure as previously outlined.

11. Fill the master cylinder reservoir to the proper level.

12. Check the brake operation.

BRAKE SPECIFICATIONS

All measurements in inches unless noted.

Year	Model	Master Cylinder Bore	Brake Disc Original Thickness	Brake Disc Minimum Thickness	Brake Disc Maximum Runout	Brake Drum Diameter Original Inside Diameter	Brake Drum Diameter Max. Wear Limit	Brake Drum Diameter Maximum Machine Diameter	Minimum Lining Thickness Front	Minimum Lining Thickness Rear
1987	Wrangler	0.937	NA	0.815	0.004	10.0	10.06	NA	0.031	0.031
1988	Wrangler	0.937	NA	0.815	0.004	10.0	10.06	NA	0.031	0.031
1989	Wrangler	0.937	NA	0.815	0.004	10.0	10.06	NA	0.031	0.031
1990	Wrangler	0.937	NA	0.940	0.005	9.50	9.55	NA	0.031	0.031
1991	Wrangler	0.937	NA	0.890	0.005	9.0	9.05	NA	0.031	0.031
1992	Wrangler	0.937	NA	①	0.003	NA	②	NA	NA	NA
1993	Wrangler	NA	NA	0.890	0.005	NA	②	NA	NA	NA
1994–95	Wrangler	NA	NA	0.890	0.005	NA	②	NA	NA	NA

NA—Not available

① Minimum usable thickness is either cast or stamped on rotor hub face

② Maximum diameter is listed on outside of drum

85369C01

TORQUE SPECIFICATIONS

Component	U.S.	Metric
Acceleration Sensor Bracket Screws	13–18 inch lbs.	1–2 Nm
Acceleration Sensor Screws	71–83 inch lbs.	8–9 Nm
Brakeline Fitting at Master Cylinder	180 inch lbs.	20 Nm
Brakeline Fitting at Proportioning Valve	160–210 inch lbs.	18–24 Nm
Brakeline Fitting at Wheel Cylinder	160 inch lbs.	18 Nm
Brake Pedal Pivot Bolt Nuts		
Man. Trans.	20 ft. lbs.	27 Nm
Auto. Trans.	26 ft. lbs.	35 Nm
Front Brakeline-to-Brake Hose Fitting	130–160 inch lbs.	15–18 Nm
Rear Brake Hose T-Fitting Retainer Bolt	60–80 inch lbs.	7–9 Nm
Rear Brake Support Plate Bolts	32 ft. lbs.	43 Nm
Caliper Anchor Bracket Bolts (2WD Models)	77 ft. lbs.	105 Nm
Caliper Brake Hose Fitting Bolt	216–336 inch lbs.	24–38 Nm
Caliper Mounting Bolts	7–15 ft. lbs.	10–20 Nm
ECU Bracket Nuts	85–125 inch lbs.	10–14 Nm
ECU Harness Connector Bolt	85–125 inch lbs.	10–14 Nm
ECU-to-Bracket Screws	75–115 inch lbs.	8–13 Nm
HCU Brakeline Fittings	160–200 inch lbs.	18–23 Nm
HCU Mounting Bracket Bolt and Nuts	92–112 inch lbs.	10–13 Nm
Master Cylinder Mounting Stud Nuts	115–220 inch lbs.	13–25 Nm
Power Booster Nuts	30 ft. lbs.	41 Nm
Parking Brake Pedal Assembly Nuts/Bolts		
Nuts	11 ft. lbs.	15 Nm
Bolts	7 ft. lbs.	10 Nm
Wheel Bearing Nuts	175 ft. lbs.	237 Nm
Wheel Cylinder Mounting Bolts	6–13 ft. lbs.	8–18 Nm
Wheel Lug Nuts	75 ft. lbs.	102 Nm
Wheel Speed Sensor Adjusting Bolt	11 ft. lbs.	14 Nm

8535/9C02

EXTERIOR 10-2
DOORS 10-2
REMOVAL & INSTALLATION 10-2
DOOR HINGE ADJUSTMENT 10-2
HOOD 10-3
REMOVAL & INSTALLATION 10-3
ALIGNMENT 10-3
TAILGATE 10-3
REMOVAL & INSTALLATION 10-3
LIFTGATE 10-4
REMOVAL & INSTALLATION 10-4
FRONT BUMPER 10-4
REMOVAL & INSTALLATION 10-4
REAR BUMPER 10-4
REMOVAL & INSTALLATION 10-4
FRONT FASCIA AND SKID PLATE 10-5
REMOVAL & INSTALLATION 10-5
REAR FASCIA AND SKID PLATE 10-5
REMOVAL & INSTALLATION 10-5
GRILLE AND GRILLE PANEL 10-6
REMOVAL & INSTALLATION 10-6
OUTSIDE MIRRORS 10-6
REMOVAL & INSTALLATION 10-6
ANTENNA 10-7
REMOVAL & INSTALLATION 10-7
FENDERS 10-7
REMOVAL & INSTALLATION 10-7
FRONT FENDER EXTENSION PANEL 10-8
REMOVAL & INSTALLATION 10-8
SPORT BAR 10-8
REMOVAL & INSTALLATION 10-8
SOFT TOP 10-9
REMOVAL & INSTALLATION 10-9
HARDTOP 10-10
REMOVAL & INSTALLATION 10-10
EXTERNAL SPARE TIRE CARRIER 10-11
REMOVAL & INSTALLATION 10-11
INTERIOR 10-11
INSTRUMENT PANEL 10-11
REMOVAL & INSTALLATION 10-11
FLOOR CONSOLE 10-11
REMOVAL & INSTALLATION 10-11
DOOR TRIM PANEL 10-12
REMOVAL & INSTALLATION 10-12
HEADLINER 10-13
REMOVAL & INSTALLATION 10-13
DOOR LATCH 10-13
REMOVAL & INSTALLATION 10-13
TAILGATE LATCH AND RELEASE HANDLE 10-13
REMOVAL & INSTALLATION 10-13
WINDSHIELD FRAME 10-14
REMOVAL & INSTALLATION 10-14
WINDSHIELD GLASS 10-14
REMOVAL & INSTALLATION 10-14
DOOR GLASS 10-14
REMOVAL & INSTALLATION 10-14
WINDOW REGULATOR 10-15
REMOVAL & INSTALLATION 10-15
QUARTER GLASS WINDOW 10-15
REMOVAL & INSTALLATION 10-15
INSIDE REARVIEW MIRROR 10-15
REMOVAL & INSTALLATION 10-15
SEATS 10-16
REMOVAL & INSTALLATION 10-16
SEAT AND SHOULDER BELTS 10-16
REMOVAL & INSTALLATION 10-16

10

BODY AND TRIM

EXTERIOR 10-2
INTERIOR 10-11

EXTERIOR

Doors

REMOVAL & INSTALLATION

Half Metal With Soft Top

See Figures 1, 2 and 3

1. Open the door and disconnect the restraint strap from the pin.
2. Turn the window retaining sleeves ¼ turn to the left and pull them up and out of the door.
3. Remove the door hinge-to-body screws and lift off the door.

To install:

4. Position the door on the vehicle and install the door hinge-to-body screws.
5. Install the window retaining sleeves.
6. Install the restraint strap.

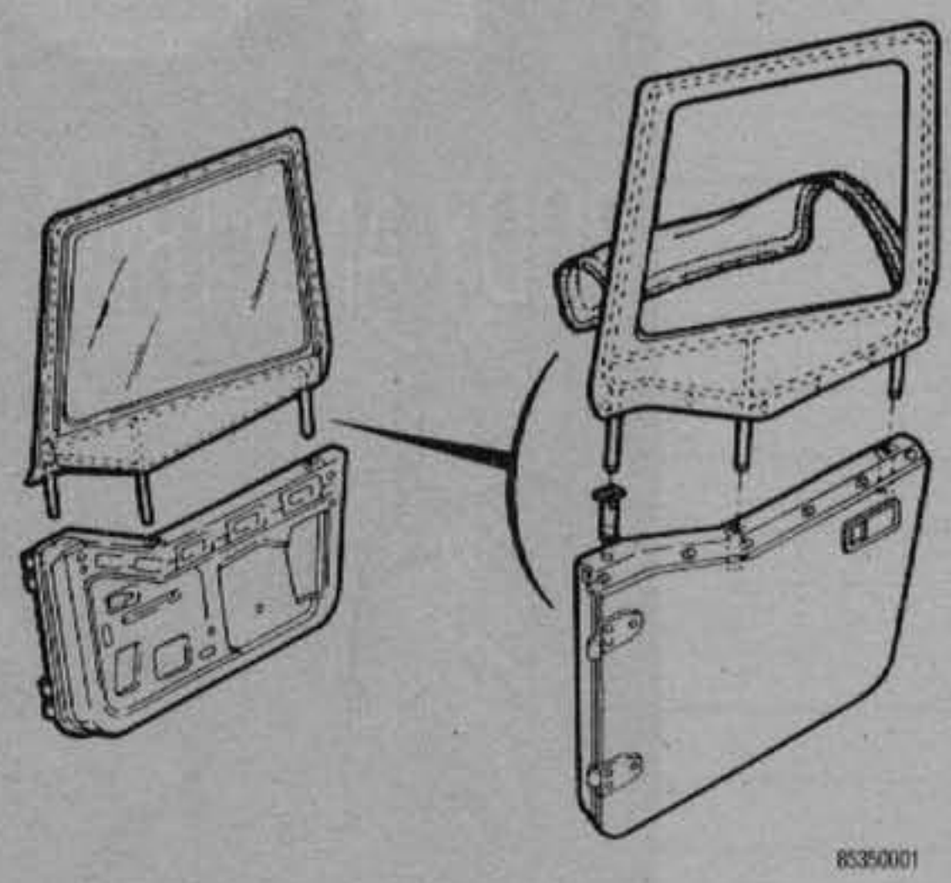

Fig. 1 Soft top window removal

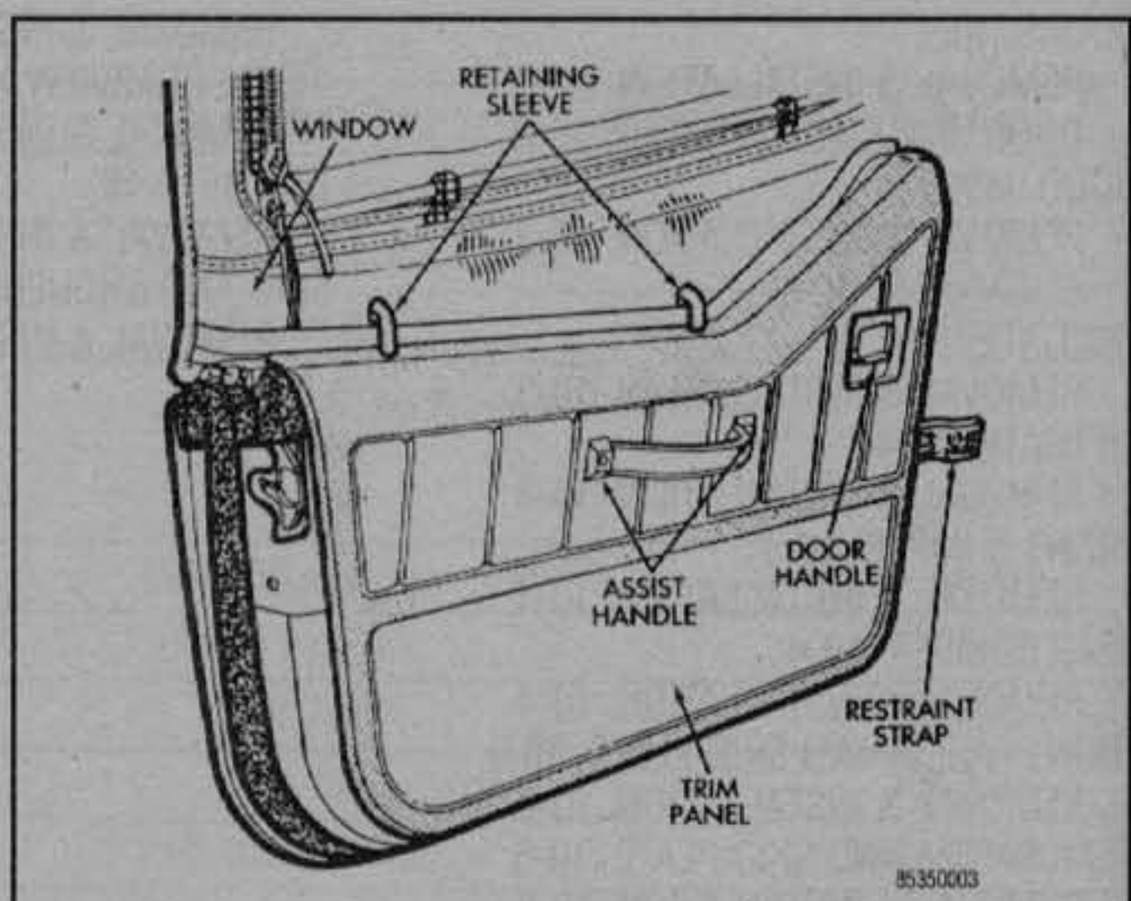

Fig. 3 Removing the window retaining sleeves on the soft top door

Full Metal With Hard Top

See Figure 4

1. Open the door and disconnect the restraint strap.
2. Matchmark the hinge-to-door position.
3. Remove the hinge-to-door screws and lift off the door.
4. When installing the door, install the fasteners but don't fully tighten them. Move the door to obtain a satisfactory fit when closed, then tighten the screws.

DOOR HINGE ADJUSTMENT

Full Metal With Hard Top

The doors are adjusted at the hinge attaching locations on either the body or the door. Enlarged holes are located in the body for the lower hinge only. Enlarged holes are also located in the door for both the upper and lower hinges for up, down, fore, aft and tilt adjustments.

Prior to the door adjustment or alignment, the door latch must be removed to allow the door to close freely and be aligned properly.

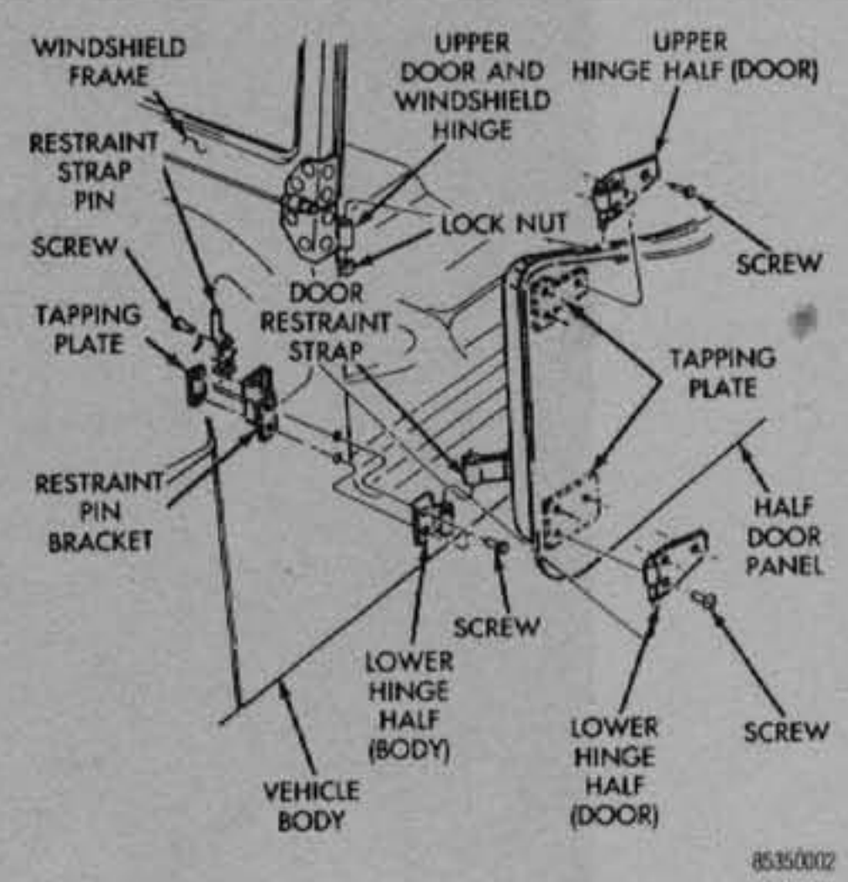

Fig. 2 Soft top door hinge attachment

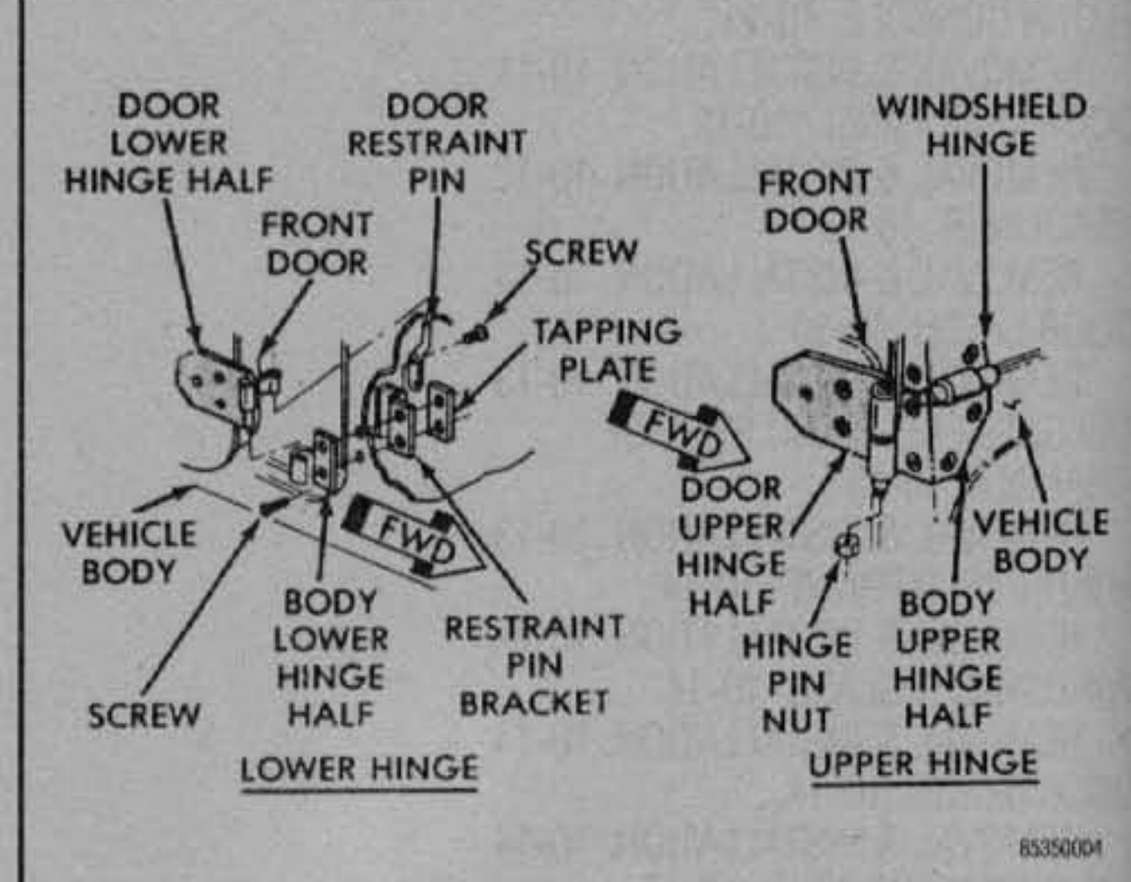

Fig. 4 Full metal door hinges

The door lock striker should be adjusted in or out to allow the door latch to fully engage. Also, the door must be flush with the adjacent body panels.

Hood

REMOVAL & INSTALLATION

See Figure 5

1. Matchmark the hinges and mounting panels.
2. Disconnect the underhood light wire.
3. Unbolt the hood from the hinges.
4. Remove the hood prop rod, prop rod retainer clip, side catch brackets, windshield bumpers and footman loop.
5. Assembly and installation is the reverse of removal and disassembly. Check the hood alignment.

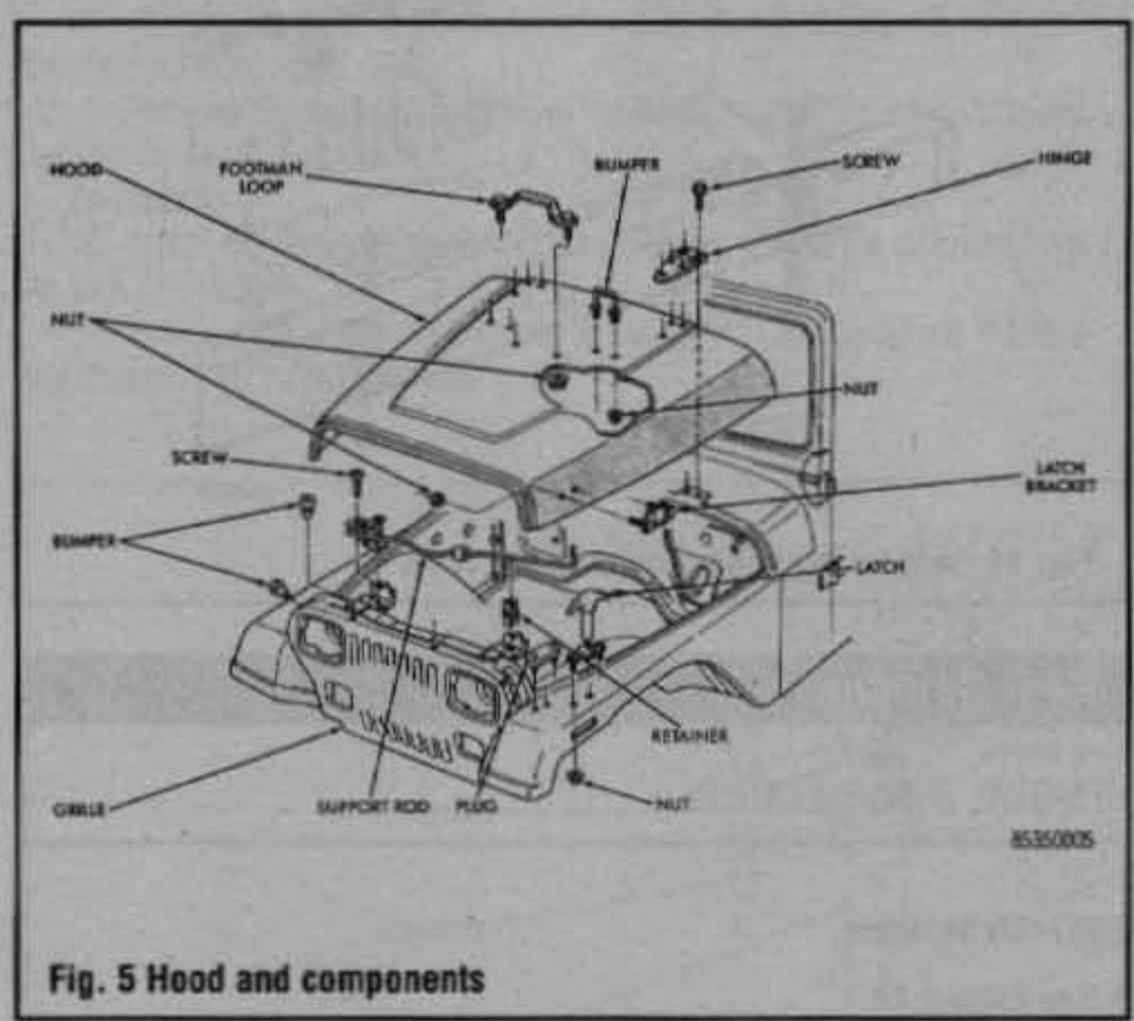

Fig. 5 Hood and components

ALIGNMENT

1. Loosen the hinge mounting screws on one side and tap the hinge in the direction opposite to which the hood is to be moved.
2. Tighten the screws.
3. Repeat this procedure on the opposite hinge.

Tailgate

REMOVAL & INSTALLATION

See Figures 6, 7 and 8

1. Open the tailgate.
2. Unbolt and remove the tailgate stop swing cover.
3. Pry out the retainer spacer that secure the tailgate tension spring in the bracket.
4. Squeeze the spring and remove it from the bracket.
5. Remove the plastic isolator.
6. Close the tailgate.
7. Remove the tailgate hinge bolts.
8. Release the latch and lift out the tailgate.
9. Installation is the reverse of removal. Alignment is accomplished by loosening the hinge bolts and moving the closed tailgate to obtain a satisfactory fit.

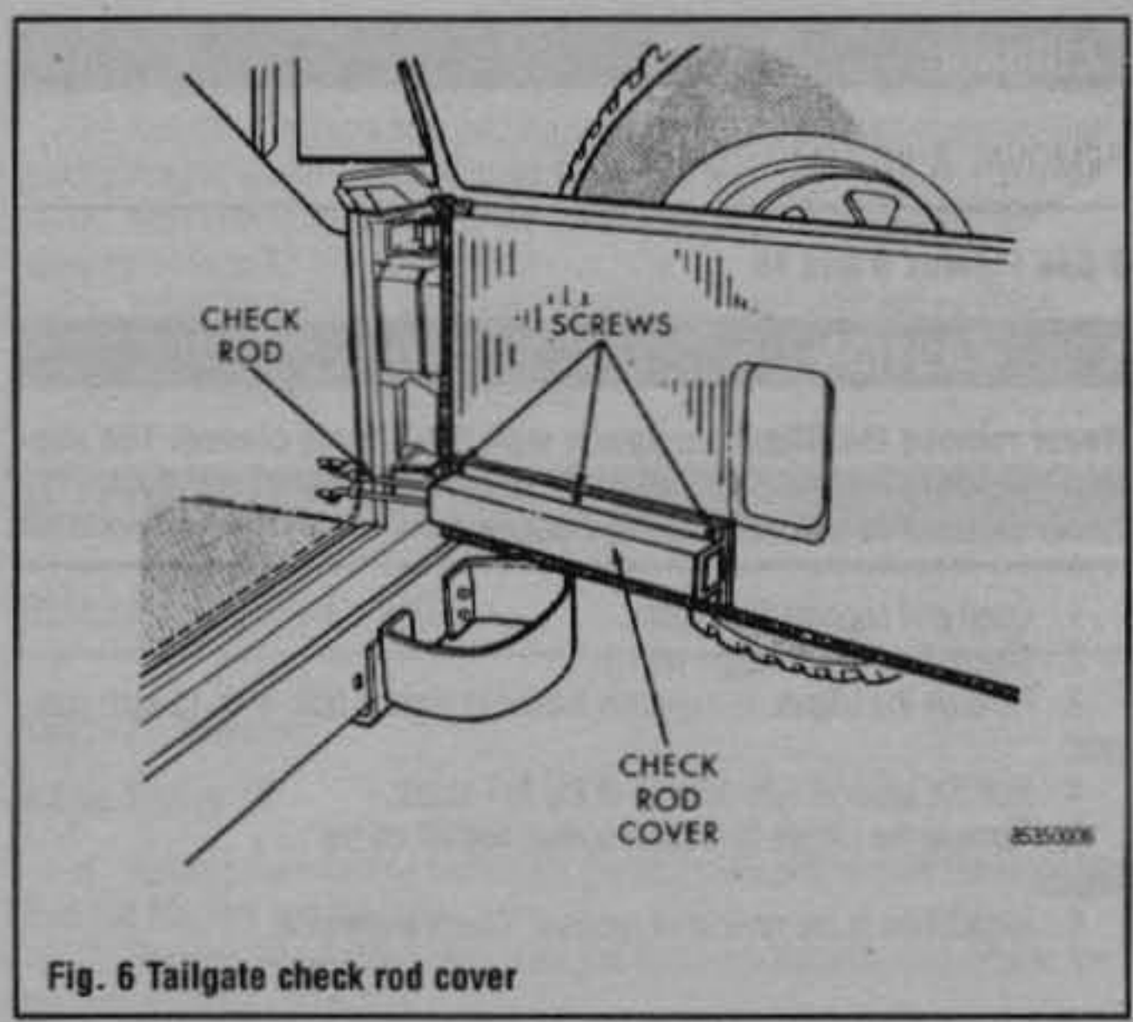

Fig. 6 Tailgate check rod cover

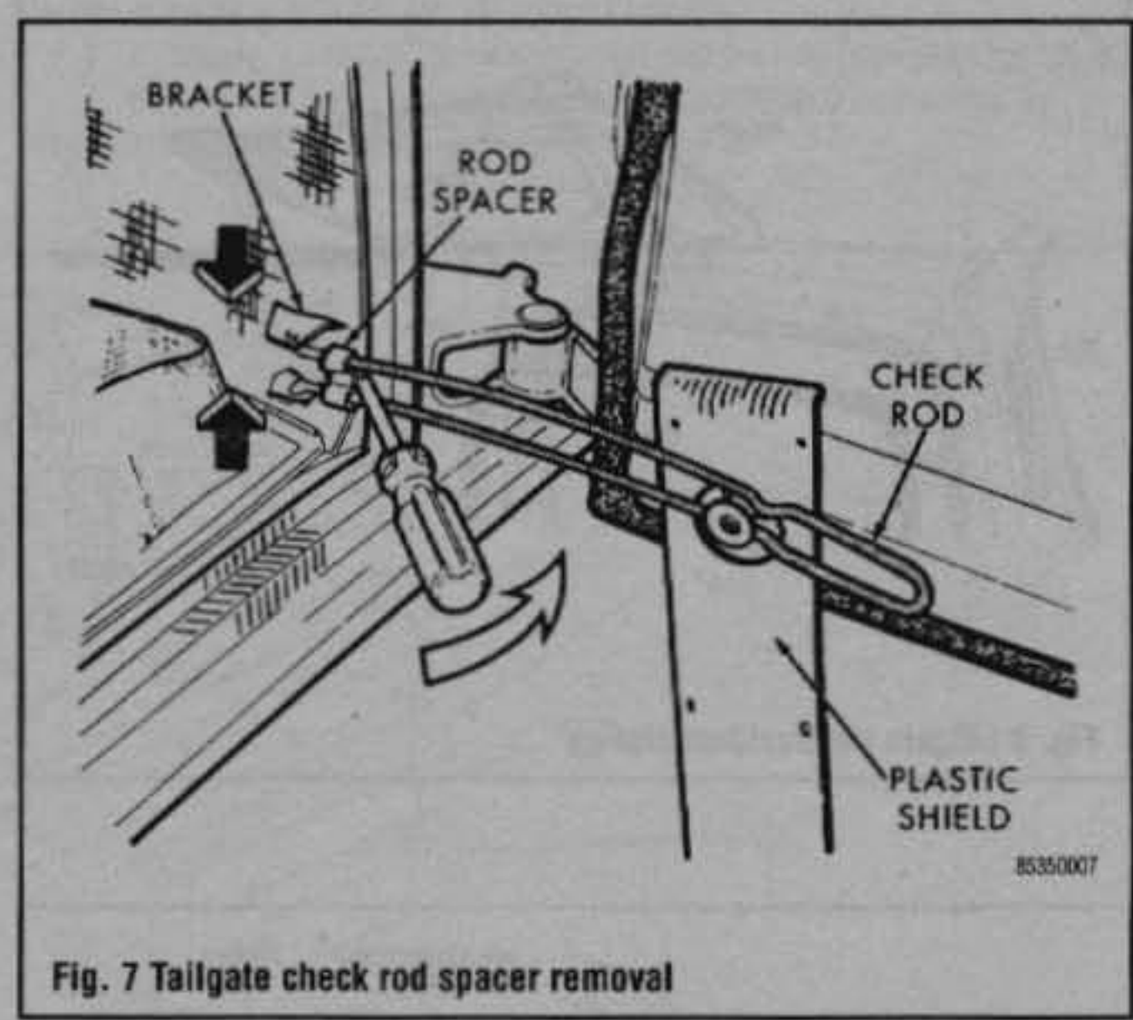

Fig. 7 Tailgate check rod spacer removal

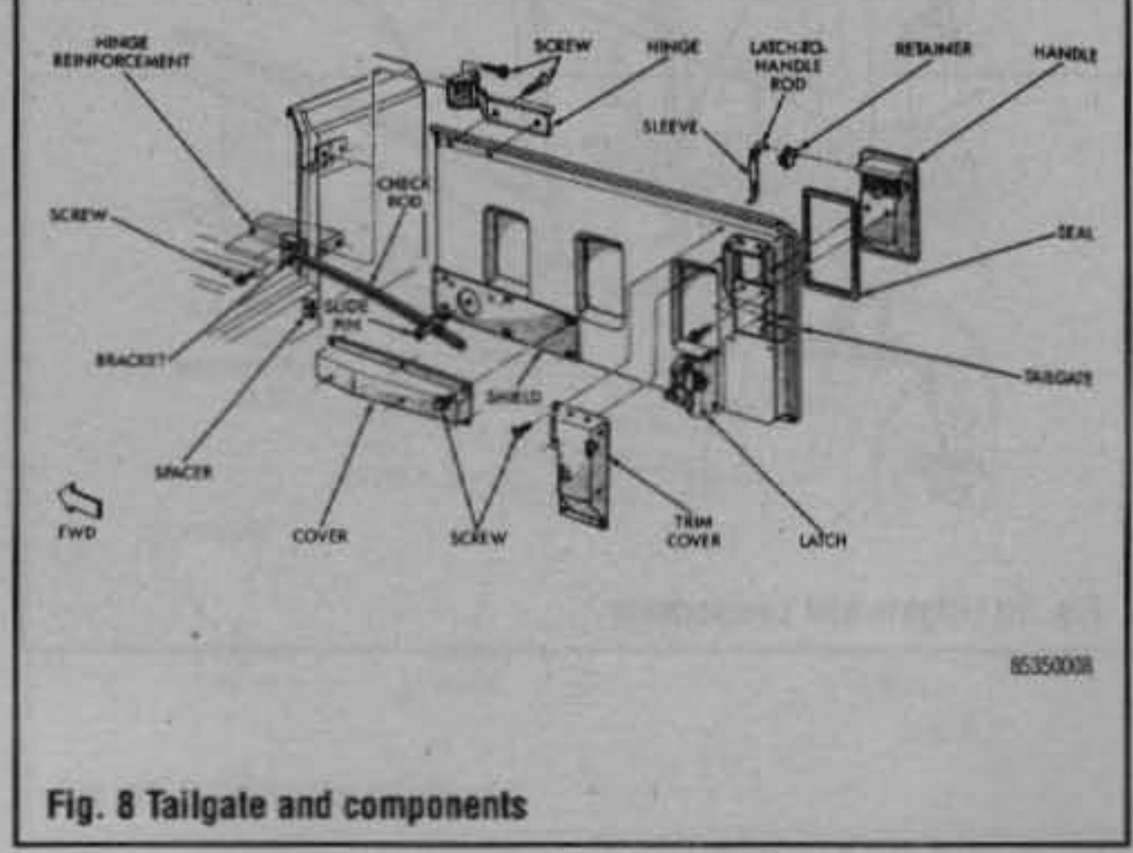

Fig. 8 Tailgate and components

Liftgate

REMOVAL & INSTALLATION

See Figures 9 and 10

CAUTION

Never remove the liftgate supports with the liftgate closed! The support cylinders are operated under high pressure. After removal, never attempt to disassemble the supports!

1. Open and support the liftgate.
2. Disconnect the defogger wiring.
3. Remove the liftgate-to-supports retaining clips at both ends of each support.
4. Pull the support cylinders off of the ball studs.
5. Remove the hinges-to-liftgate screws and lift off the liftgate.
6. Installation is the reverse of removal. Check alignment.

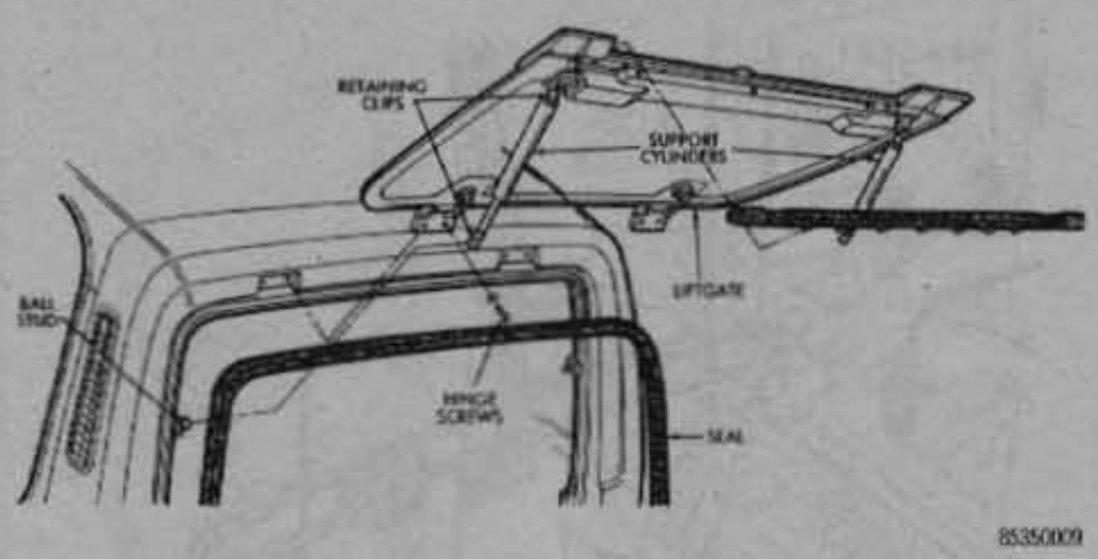

Fig. 9 Liftgate removal/installation

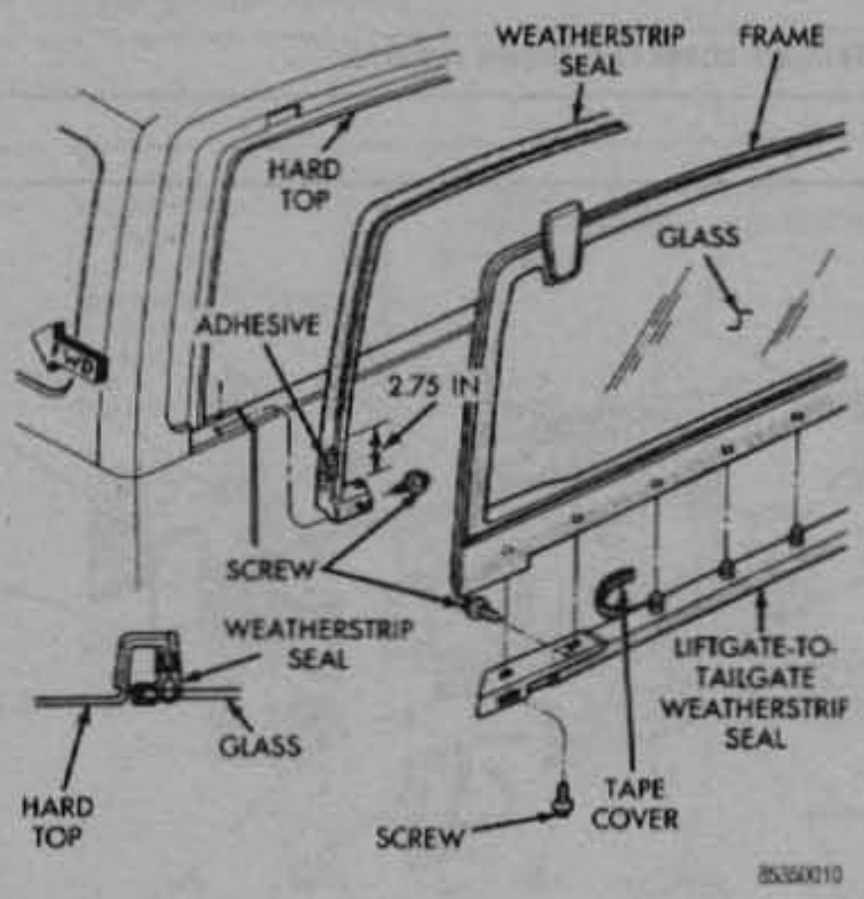

Fig. 10 Liftgate and components

Front Bumper

REMOVAL & INSTALLATION

1987–90 Vehicles

See Figure 11

1. Remove any auxiliary lighting.
2. Remove the bolts and nuts attaching the bumper to the frame extensions.
3. Remove the bumper.
4. Installation is the reverse of removal.

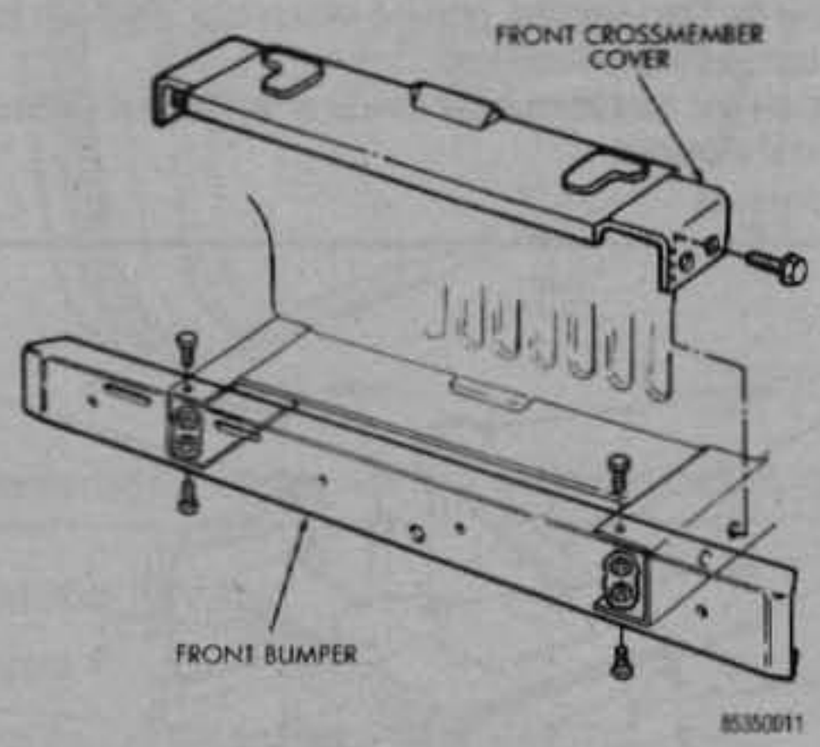

Fig. 11 Front bumper and crossmember cover

Rear Bumper

REMOVAL & INSTALLATION

1987–90 Vehicles

See Figure 12

1. Remove the nuts and bolts attaching the bumpers to the frame.
2. Remove the bumpers.
3. Installation is the reverse of removal.

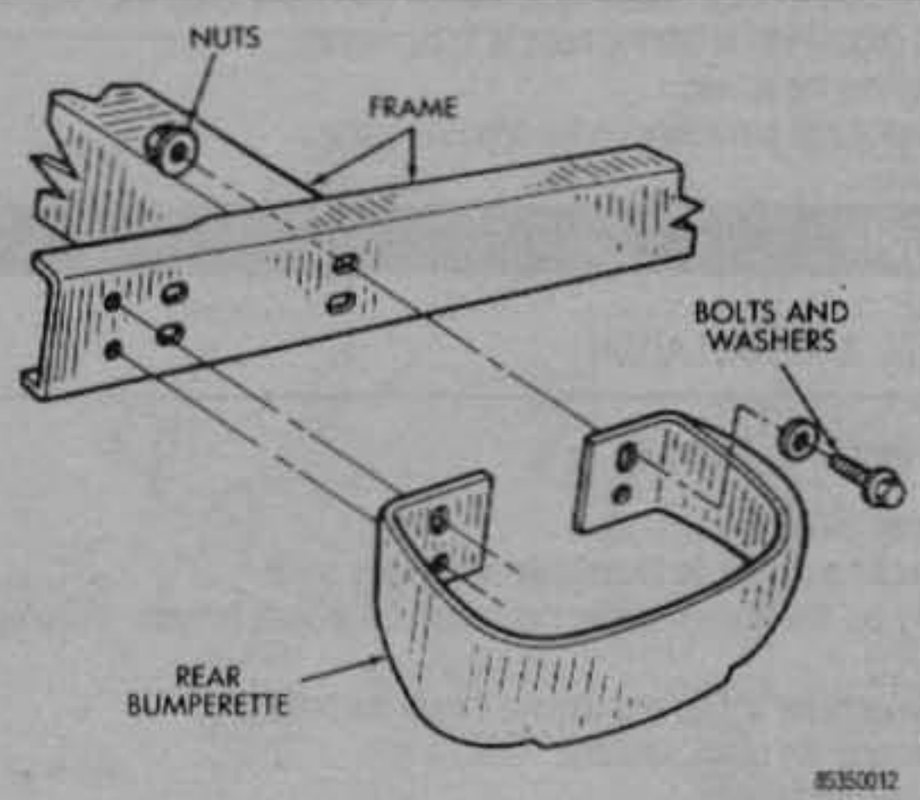

Fig. 12 Rear bumperette attachment

Front Fascia and Skid Plate

REMOVAL & INSTALLATION

1991–95 Vehicles

See Figures 13, 14 and 15

1. Remove the step pad from the fascia.
2. Remove the fascia push pins from the fascia support and the retaining bolts from the skid plates. Remove the fascia from the frame crossmember.
3. Remove the bolts retaining the fascia spacer to the frame crossmember and remove the spacer.
4. Remove the fascia step pad support bracket from the frame crossmember by removing the retaining screws.
5. Remove the retaining bolts from the skid plate and remove the skid plate from the brackets.
6. Remove the retaining bolts from the skid plate brackets and remove the brackets from the frame rails.
7. Remove the retaining bolts from the fascia support-to cover plate and remove the fascia support.

To install:

8. Install the fascia support-to cover plate and tighten the retaining bolts to 44 inch lbs. (5 Nm).
9. Position the skid plate brackets at the frame rails and tighten the retaining screws to 18 ft. lbs. (25 Nm).
10. Position the skid plate at the brackets and tighten the retaining screws to 18 ft. lbs. (25 Nm).
11. Position the fascia step pad support bracket at the frame crossmember and tighten the retaining screws to 18 ft. lbs. (25 Nm).
12. Install the fascia spacer to the frame crossmember and tighten the retaining bolts to 53 inch lbs. (6 Nm).
13. Install the fascia to the frame crossmember and install the retaining bolts and push pins. Tighten the retaining bolts to 7 ft. lbs. (10 Nm).
14. Install the step pad to the fascia.

Rear Fascia and Skid Plate

REMOVAL & INSTALLATION

1991–95 Vehicles

See Figure 16

1. Remove the retaining bolts from the skid plate and remove the skid plate from the brackets and the fascia.
2. Remove the retaining bolts from the skid plate brackets and remove the brackets from the frame rails.
3. Remove the fascia push pins from the fascia support bracket and remove the fascia from the retainer and the support bracket.
4. If necessary, remove the retaining nuts and the step pads from the fascia.
5. Remove the fascia support bracket from the frame crossmember by removing the retaining nuts and screws.

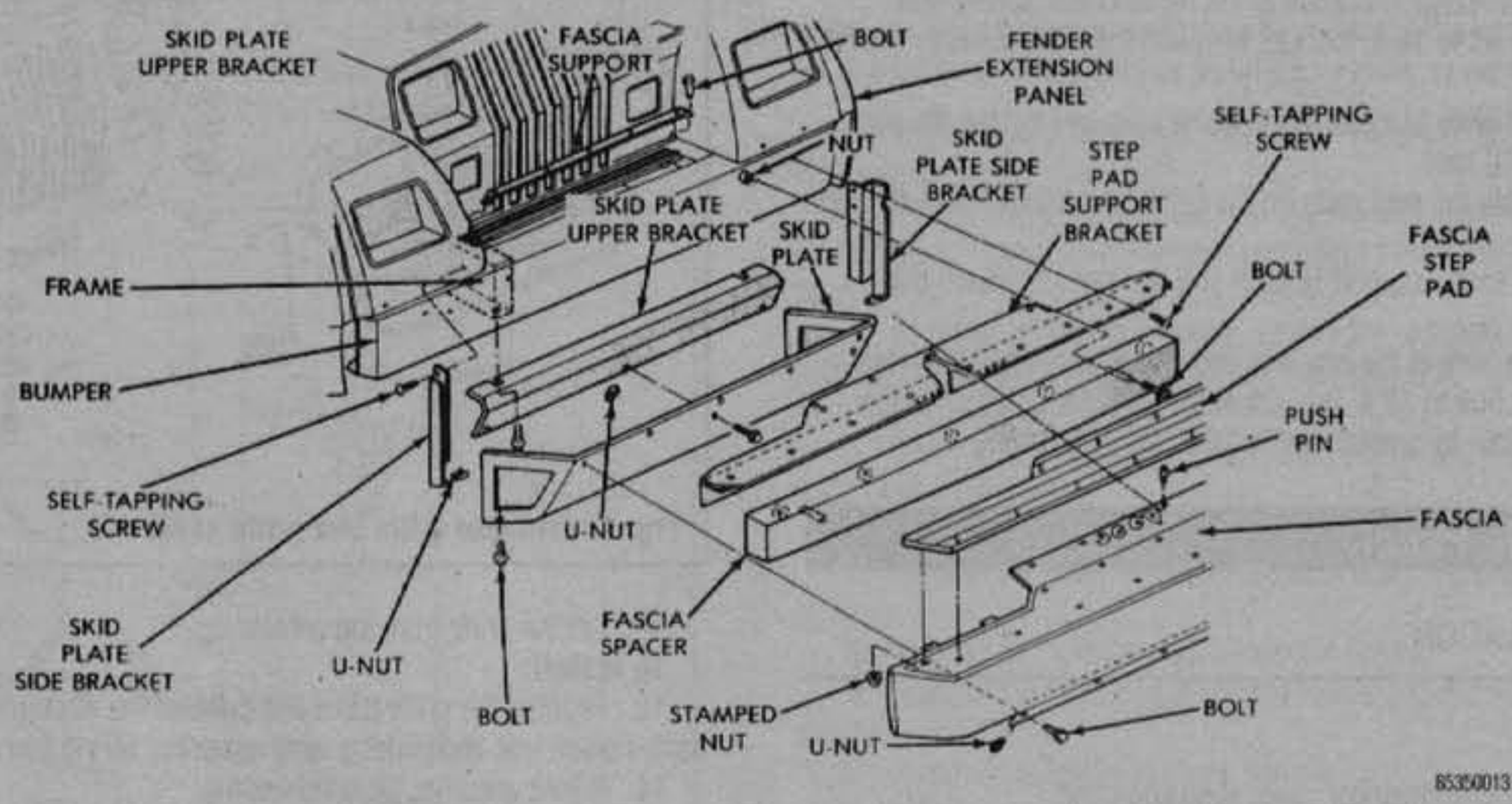

Fig. 13 Exploded view of the front fascia and skid plate

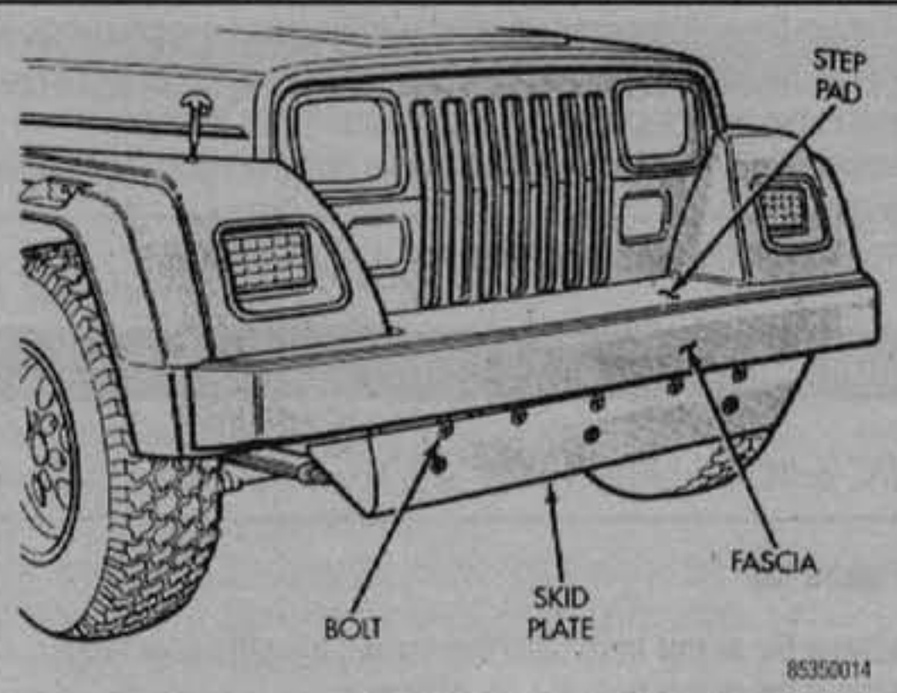

Fig. 14 Front fascia and skid plate

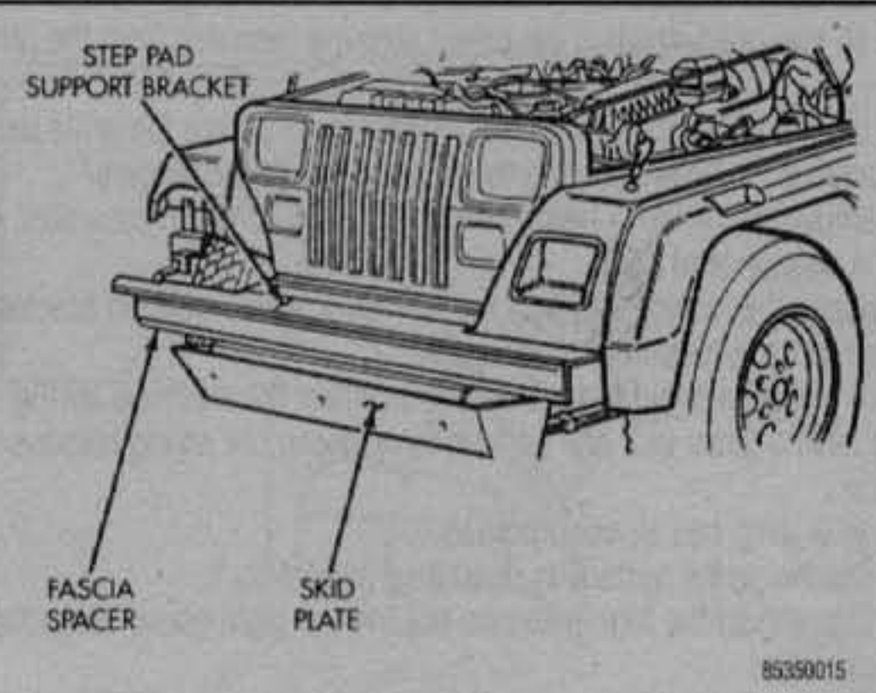

Fig. 15 Front fascia removed

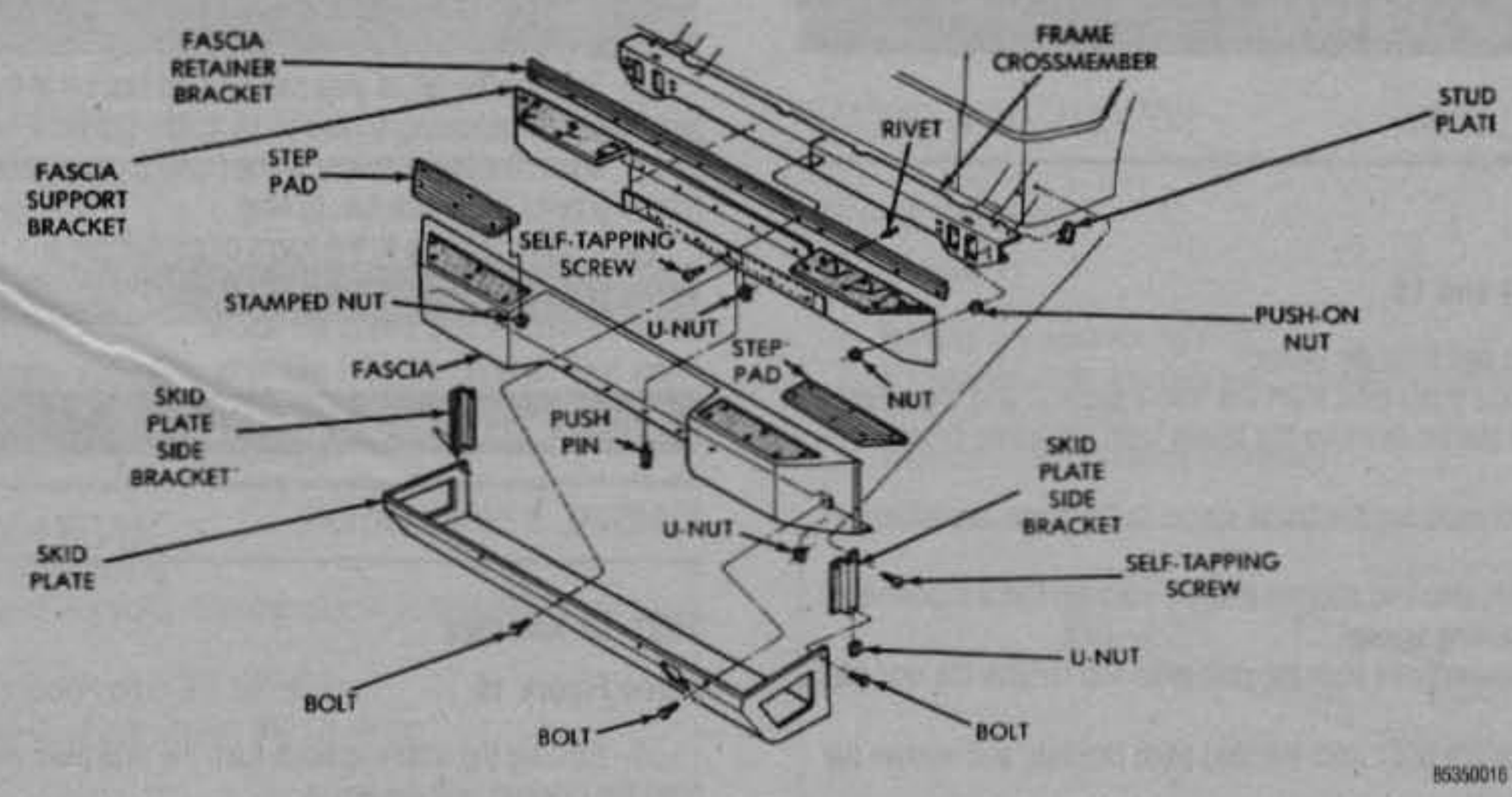

Fig. 16 Exploded view of the rear fascia and skid plate

6. If necessary, remove the rivets and the fascia retainer from the support bracket.

To install:

7. If removed, Install the fascia retainer to the support bracket and install the retaining rivets.
8. Position the fascia support bracket at the frame crossmember and tighten the retaining screws to 18 ft. lbs. (25 Nm) and the retaining nuts to 37 ft. lbs (50 Nm).
9. Position the skid plate brackets at the frame rails and tighten the retaining screws to 7 ft. lbs. (10 Nm).
10. If necessary, install the step pads on the fascia and tighten the retaining nuts to 4 ft. lbs. (6 Nm).
11. Install the fascia to the support bracket and retainer and install the retaining push pins.
12. Position the skid plate at the brackets and fascia and install the retaining bolts. Tighten the center bolt to 18 ft. lbs. (25 Nm), the outer bolt to 7 ft. lbs. (10 Nm), and the skid plate-to-bracket bolt to 18 ft. lbs. (25 Nm).

Grille and Grille Panel

REMOVAL & INSTALLATION

See Figure 17

1. Remove the front crossmember cover, if so equipped.
2. Remove the screws securing the radiator and shroud to the radiator grille guard panel.
3. If so equipped, remove the retaining bolts and separate the A/C condenser from the grille panel.
4. If so equipped, remove the power steering reservoir from the grille panel.
5. If so equipped, remove the air intake adapters from the grille panel.
6. Remove the bolts securing the guard panel to the fenders.
7. Remove the grille-to-frame crossmember hold-down assembly, keeping track of the sequence of parts.
8. Loosen the radiator support rods-to-grille guard support bracket nuts.
9. Remove the rods from the brackets.
10. Tilt the grille panel forward and disconnect the electrical wiring at the headlamp sealed beam unit and parking lamp assembly wiring harness at the connectors.
11. If your Jeep has air conditioning:
    a. Discharge the system as described in Section 1.
    b. Disconnect the high pressure hose at the sight glass. Immediately cap both openings!
    c. Connect the high pressure hose at the compressor. Immediately cap both openings!

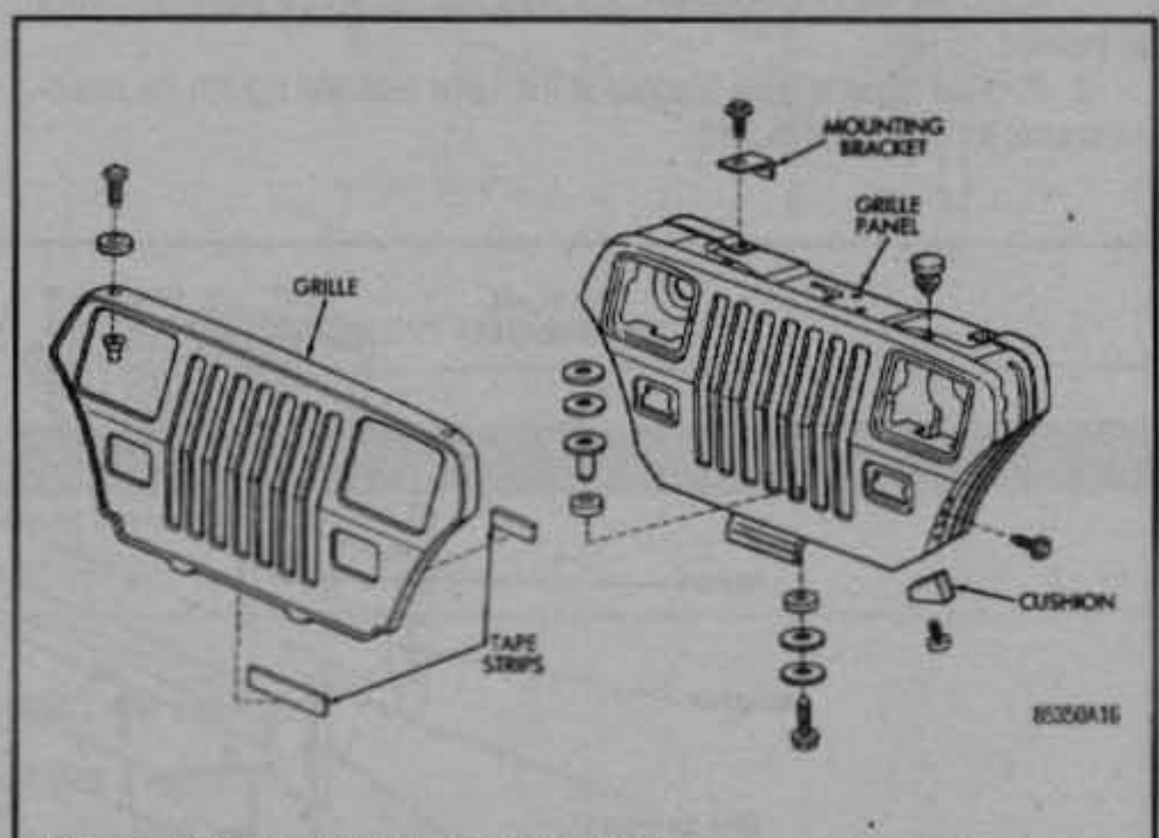

Fig. 17 Radiator grille and grille panel

12. Lift the grille from the vehicle.

To install:

13. Position the grille panel and connect the electrical wiring at the headlamp sealed beam unit and parking lamp assembly wiring harness at the connectors.
14. If your Jeep has air conditioning:
    a. Connect the high pressure hose at the compressor.
    b. Connect the high pressure hose at the sight glass.
    c. Charge the system as described in Section 1.
15. Install the rods on the brackets.
16. Tighten the radiator support rods-to-grille guard support bracket nuts.
17. Install the grille-to-frame crossmember hold-down assembly.
18. Install the bolts securing the guard panel to the fenders.
19. Install the screws securing the radiator and shroud to the radiator grille guard panel.
20. Install the front crossmember cover, if so equipped.

Outside Mirrors

REMOVAL & INSTALLATION

See Figure 18

1. Remove the mirror base attaching screws from the door hinge.
2. Remove the mirror from the door hinge.
3. Installation is the reverse of removal. Tighten the retaining screws to 96 inch lbs. (11 Nm).

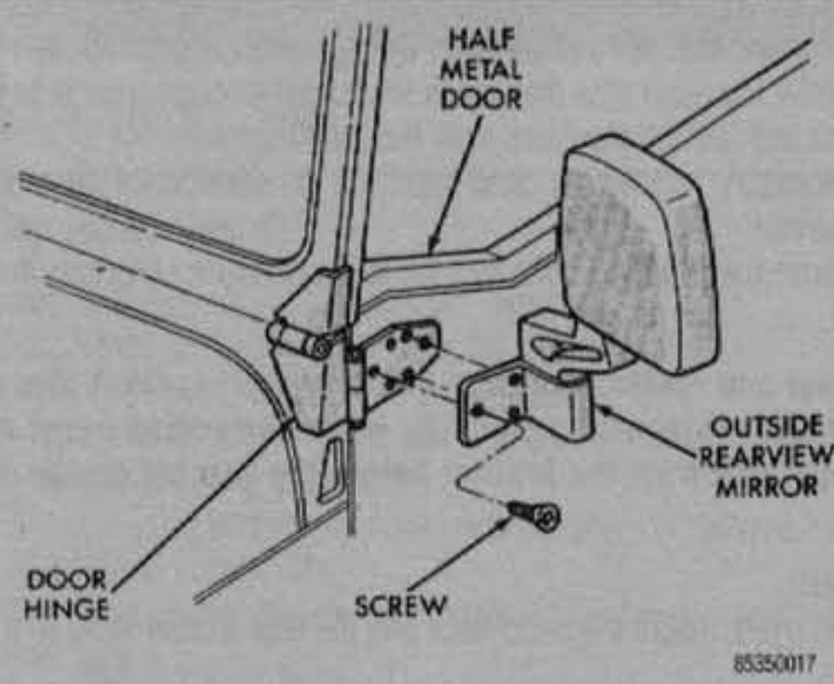

Fig. 18 Door mirror installation

Antenna

REMOVAL & INSTALLATION

See Figure 19

1. Remove the radio as outlined in Section 6.
2. Remove the 3 screws holding the antenna base and pad to the body.
3. Pull the antenna and the cable out of the vehicle.

To install:

4. Make sure the antenna pad is placed over the cable and guide the cable under the instrument panel.
5. Install the antenna base and pad to the body and secure with the 3 screws.
6. Install the antenna into the radio and install the radio.

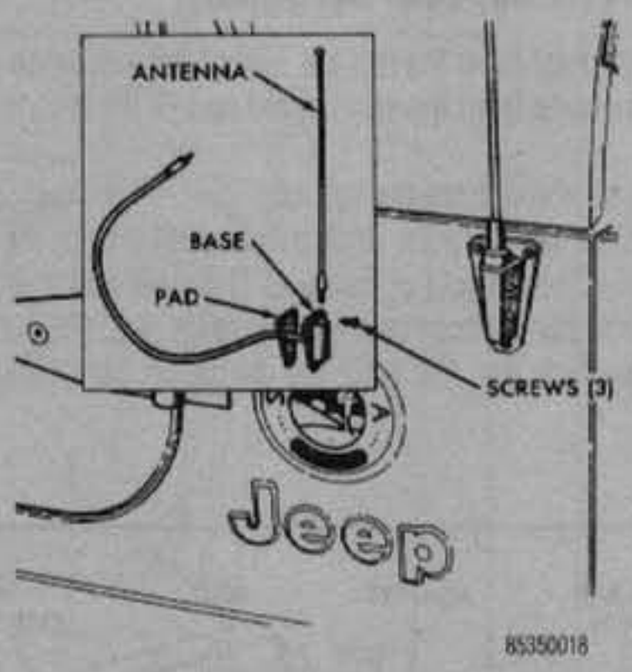

Fig. 19 Antenna removal and installation

Fenders

REMOVAL & INSTALLATION

1987–91 Vehicles

See Figure 20

1. Remove or disconnect all items attached to the fender apron.
2. Disconnect the wiring at the marker light.
3. Remove the antenna where necessary.
4. Remove the bolts attaching the fender and brace to the firewall.
5. Remove the bolts attaching the fender to the grille panel.
6. Pull the fender out and lift it from the Jeep.
7. Installation is the reverse of removal.

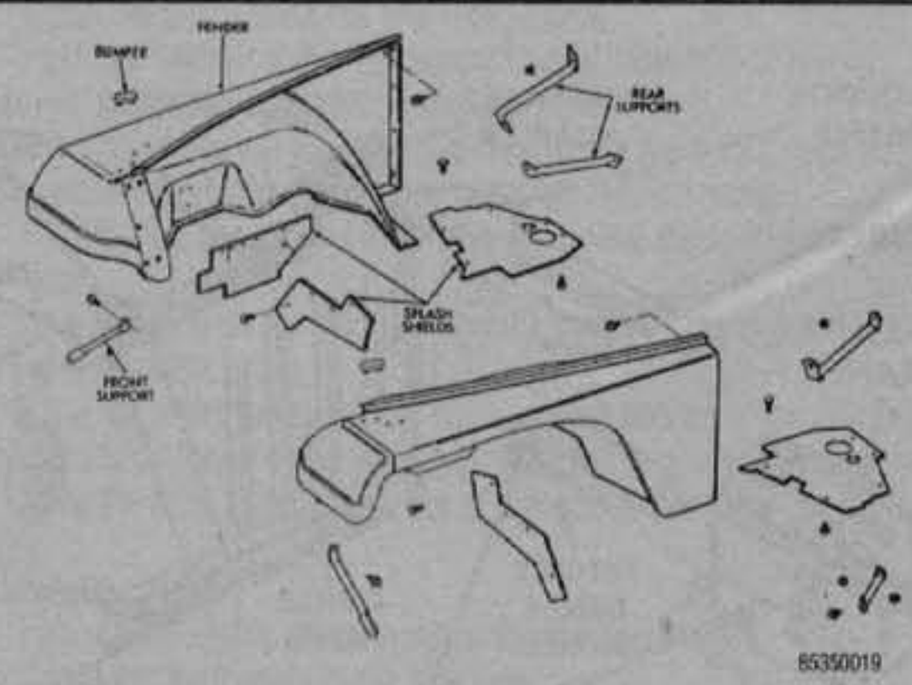

Fig. 20 Front fender components—1987–95

1992–95 Vehicles

See Figures 20, 21 and 22

Wranglers are comprised of the fender outer panel, the fender inner panel the front and rear support brackets and the splash shields. Standard Wrangler fenders cannot be used for installation on the Renegade vehicles. The Renegade must have additional sheet metal removed for tire clearance.

1. On Renegade models only, remove the front fender extension panel as outlined in this section.

Before installation of a Renegade fender, all newly drilled holes must be pre-primed with a primer before any bolts or screws are installed.

2. As necessary, remove or disconnect all components attached to the fender inner panel.
3. If removing the left fender: remove the air cleaner housing and support bracket horn, as well as the washer and coolant reservoir from the fender's inner panel.
4. If removing the right fender: remove the jack and related tools, jack tray, and A/C receiver/drier from the fender inner panel, as well as the radio antenna from the outer panel.
5. Disconnect the wiring harness bulb socket at the marker light and the hood hold-down clamp.
6. Remove the battery tray support bracket screws.
7. Remove the bolts, nuts and brackets attaching the fender to the grille panel.
8. Remove the splash shields from the fender.
9. Remove the bolts that attach the fender and the rear supports to the cowl panel.
10. Remove the fender from the vehicle.

To install:

11. Install the fender into position and tighten the rear supports to the cowl panel bolts to 156 inch lbs. (18 Nm).

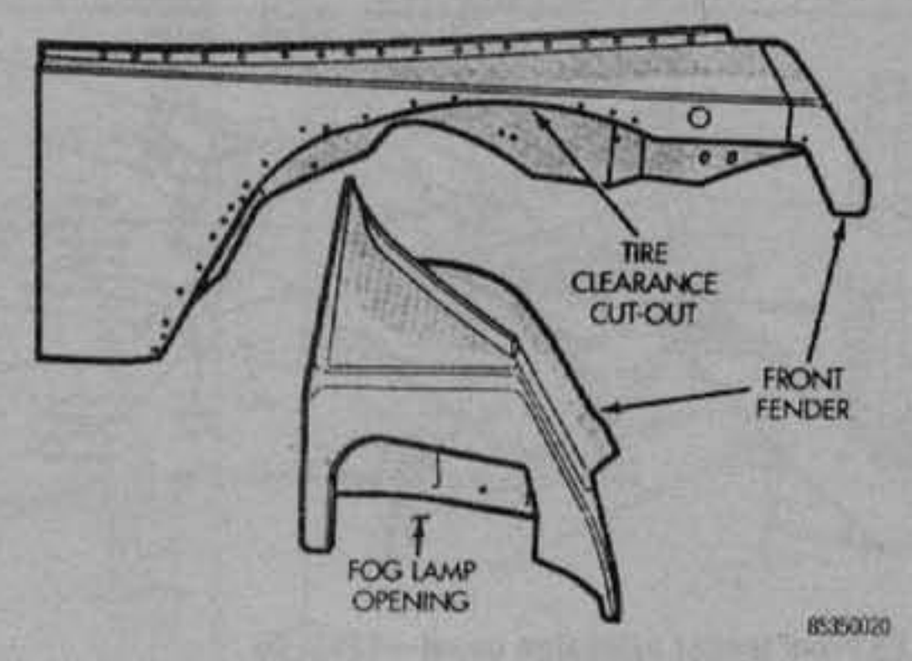

Fig. 21 Front fender—1992–95 Renegade

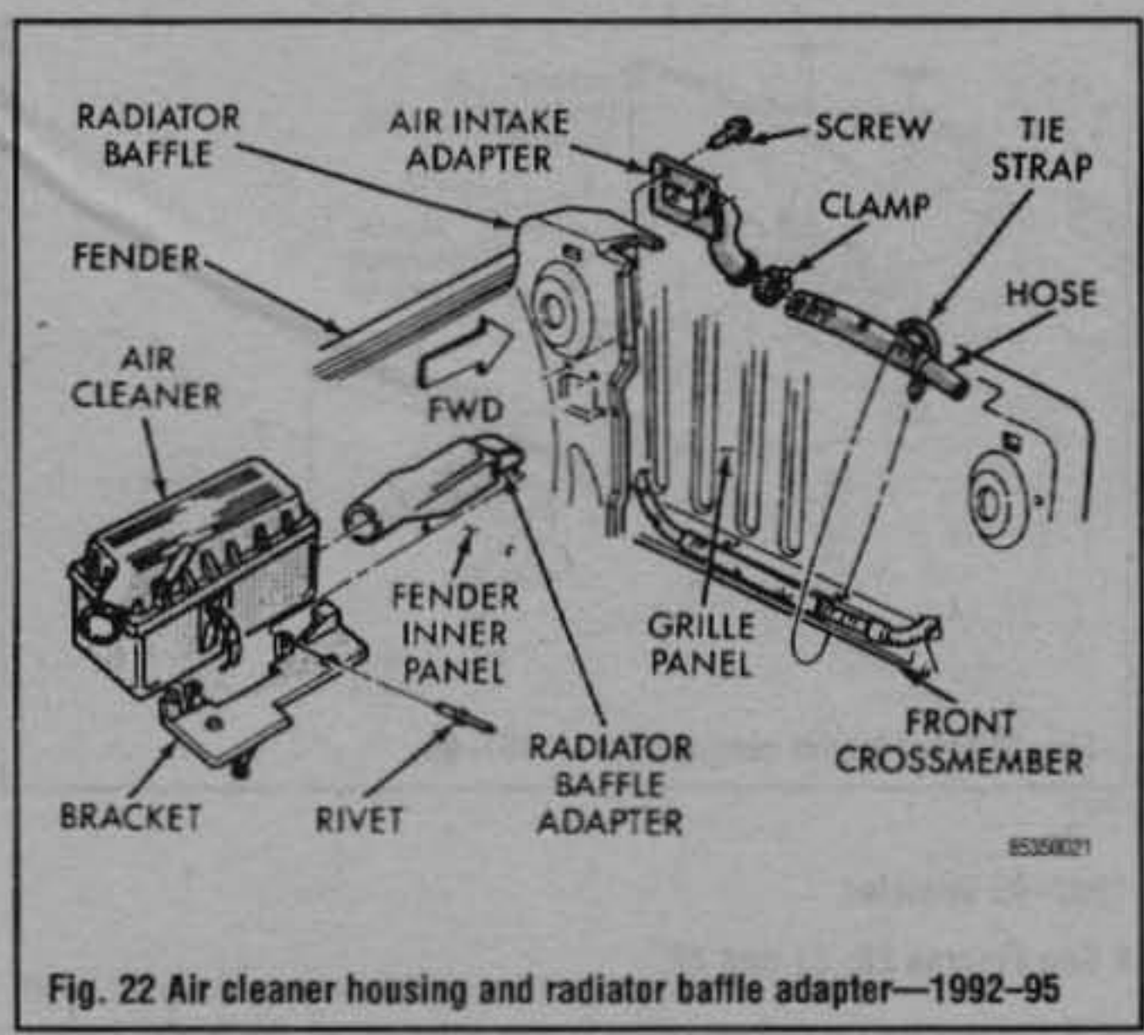

Fig. 22 Air cleaner housing and radiator baffle adapter—1992–95

12. Install the fender to the grille panel and tighten the bolts to 156 inch lbs. (18 Nm).
13. Install the battery tray support bracket screws and tighten to 156 inch lbs. (18 Nm).
14. Connect the wiring harness bulb socket to the marker light and also connect the hood hold-down clamp.
15. If installing the right fender: install the jack and related tools, jack tray, and A/C receiver/drier to the fender inner panel, and the radio antenna to the outer panel.
16. If installing the left fender: install the air cleaner housing and support bracket horn, as well as the washer and coolant reservoir to the fender inner panel.
17. On Renegade models, install the front fender extension panel as outlined in this section.

Front Fender Extension Panel

REMOVAL & INSTALLATION

1992–95 Vehicles

See Figure 23

1. Remove the radio antenna mast from the extension panel.
2. Remove the hood bumper from the extension panel.
3. Remove the fog lamp from the extension panel.

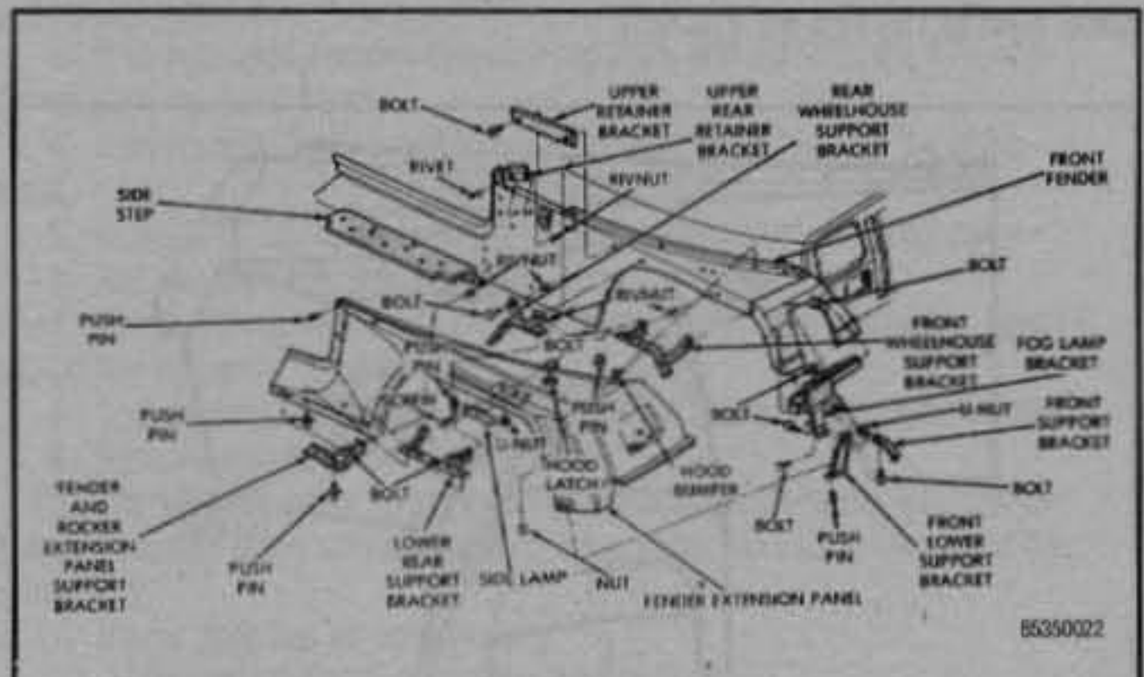

Fig. 23 Front fender extension panel—1992–95

4. Detach the hood latch from the hood.
5. Disconnect the side marker lamp wiring harness bulb socket.
6. Remove the push pins that attach the fender extension panel to the support brackets and remove the panel from the front fender.
7. If necessary, remove the hood latch and the side marker lamp from the extension panel.
8. Remove the retaining bolts and the support/retainer brackets from the front fender.

The fender and rocker extension panel support bracket also supports the rocker extension panel. The rocker extension panel must first be separated from the bracket before the bracket can be removed.

To install:

9. If removed, install the hood latch and the side marker lamp to the extension panel.
10. If removed, install the fender and rocker extension panel support bracket and the rocker extension panel.
11. Install the support/retainer brackets on the front fender and tighten the retaining bolts to 7 ft. lbs. (10 Nm).
12. Install the extension panel on the brackets and install the push pins.
13. Connect the side marker lamp wiring harness bulb socket.
14. Install the fog lamp to the extension panel.
15. Attach the hood latch to the hood.
16. Install the radio antenna mast to the extension panel.
17. Remove the hood bumper from the extension panel.

Sport Bar

REMOVAL & INSTALLATION

See Figure 24

The following procedures apply only to factory-installed roll bars. Aftermarket roll bars may differ significantly!

1. Remove the bolts from the roll bar end of the extension bars.
2. Remove the bolts from the windshield end of the extension bars and remove the bars.
3. Unbolt the seatbelts from the roll bar.
4. Unbolt the roll bar from the floor pan and lift it from the Jeep.
5. Installation is the reverse of removal. Use new sealer under the roll bar legs. Torque the roll bar-to-floor pan bolts to 66 ft. lbs. (89 Nm); the seatbelt-to-roll bar bolts to 46 ft. lbs. (62 Nm); the extension bar bolts to 45 ft. lbs. (61 Nm).

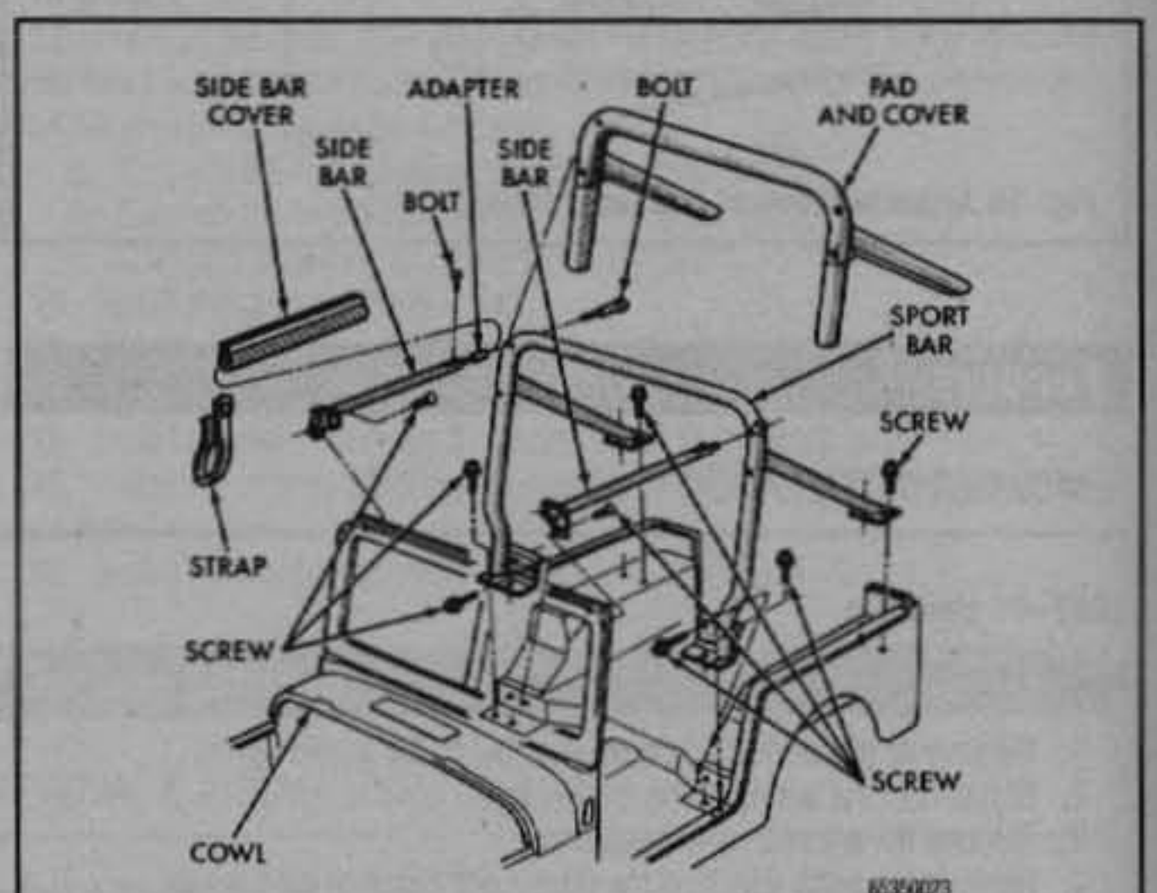

Fig. 24 Sport bar and related components

Soft Top

REMOVAL & INSTALLATION

See Figures 25 thru 38

1. Unsnap the top at the front corner fasteners.
2. Disconnect the upper frame from the door flange.
3. Unzip the side curtain front and rear zippers.
4. Unsnap the interior snap tab and pull the bottom edge of each curtain out of the bottom retaining channel.
5. Slide the front edge of the front curtain down and remove it from the retainer on the front support bar.
6. Pull down on the spreader bar to release the tension on the front and rear support bars.
7. Open the tailgate.
8. Unzip the rear curtain top and side zippers.
9. Push the bottom of the rear support bows forward 1–2 inches (25–51mm), and out of the notch in the side rails.
10. Disconnect the top from the drip rails above the doors, then pull the top from the retainer along the upper edge of the windshield frame.
11. Fold the top back from the windshield so that the fold is at the front support bow.
12. Slide the lock on the drip rail forward, then pull the drip rail off the lock pin on the windshield frame.
13. Slide the entire top assembly rearward. the bottom of the rear support bows should slide forward and fold under the front support bows and drip rails.
14. Slide the front support bow out of the side rail and remove the top assembly.

To install:

15. Unhook the elastic straps holding the top assembly.
16. Install the front bows in the side rails.

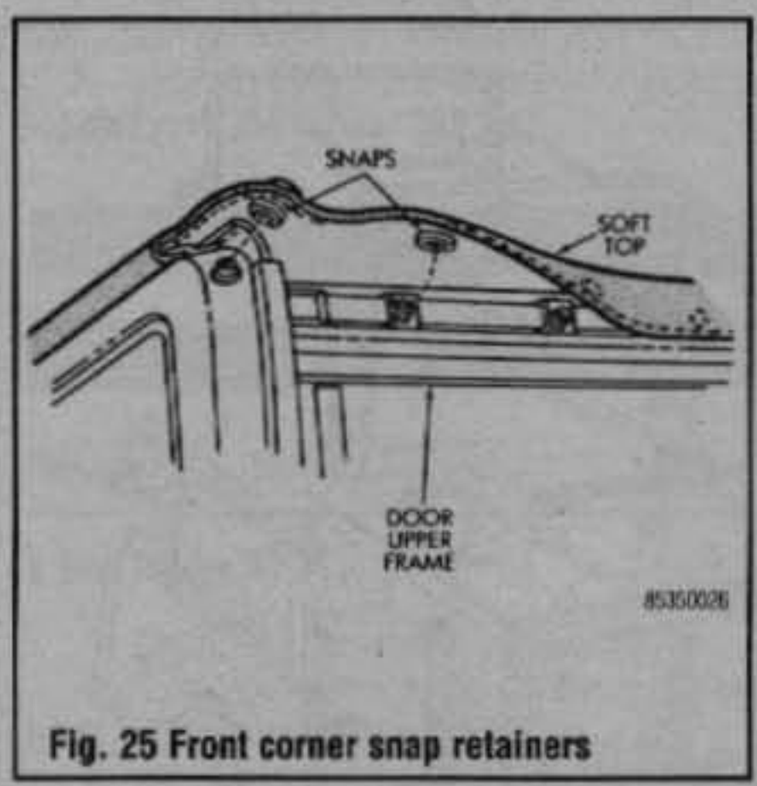

Fig. 25 Front corner snap retainers

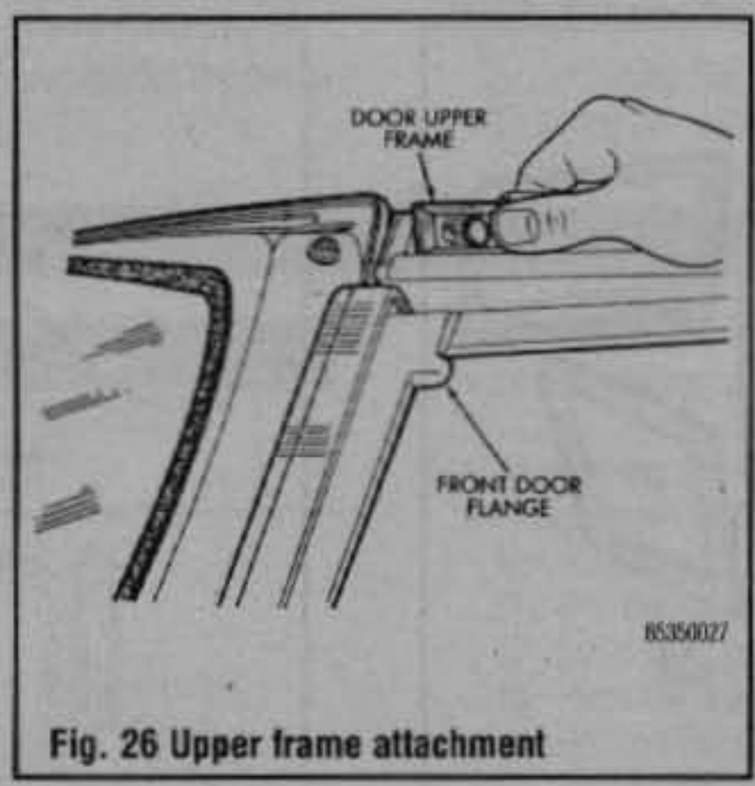

Fig. 26 Upper frame attachment

Fig. 27 Door window removal/installation

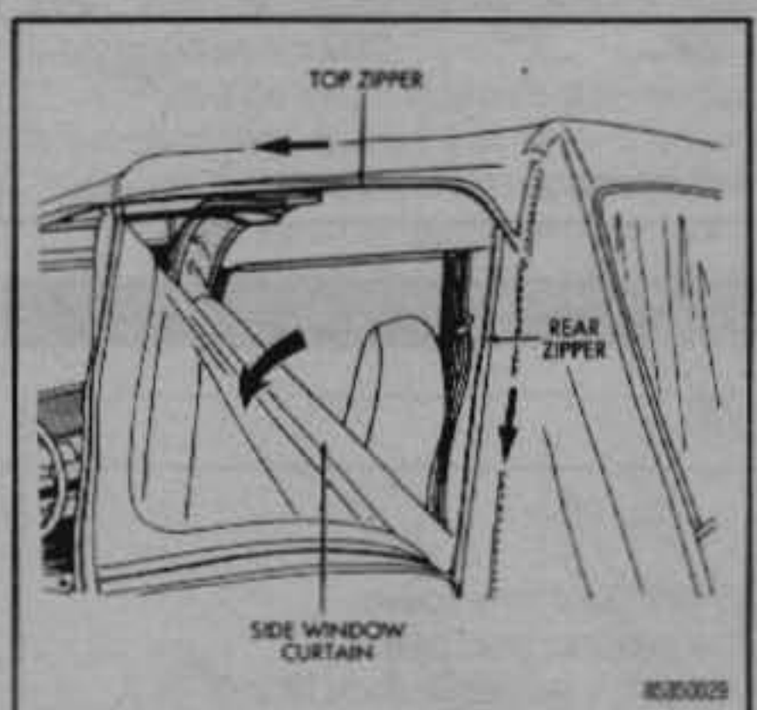

Fig. 28 Side curtain front and rear zippers

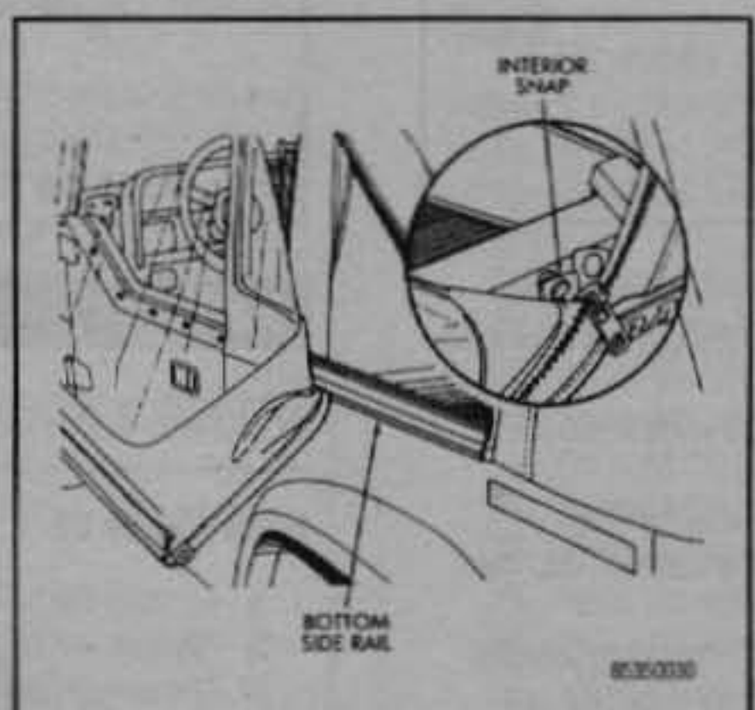

Fig. 29 Side curtain channel attachment

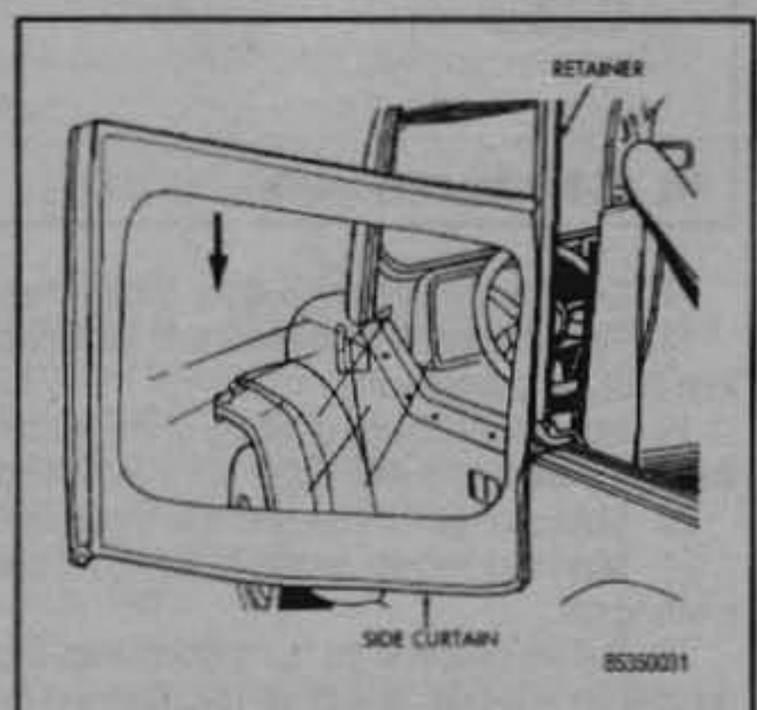

Fig. 30 Side curtain removal/installation

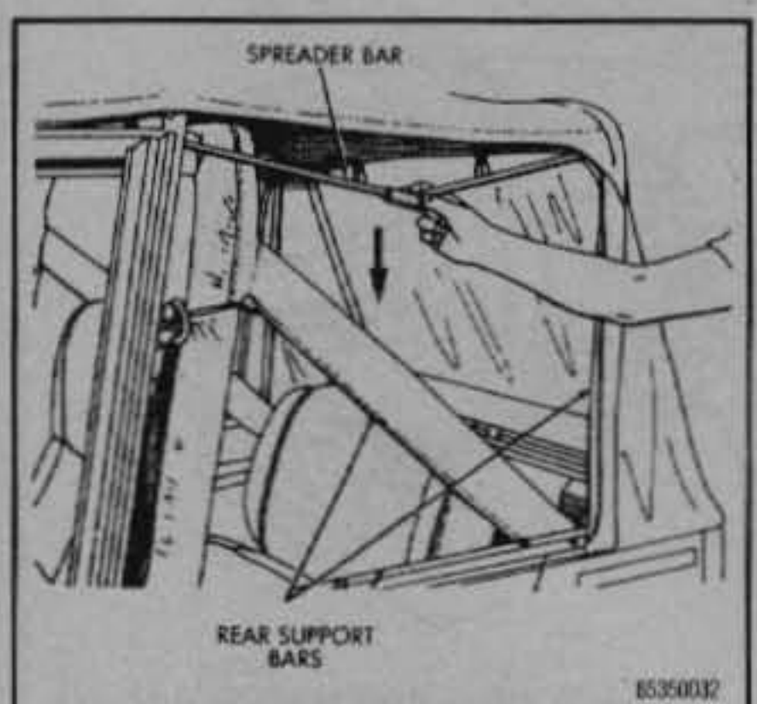

Fig. 31 Releasing the spreader bar

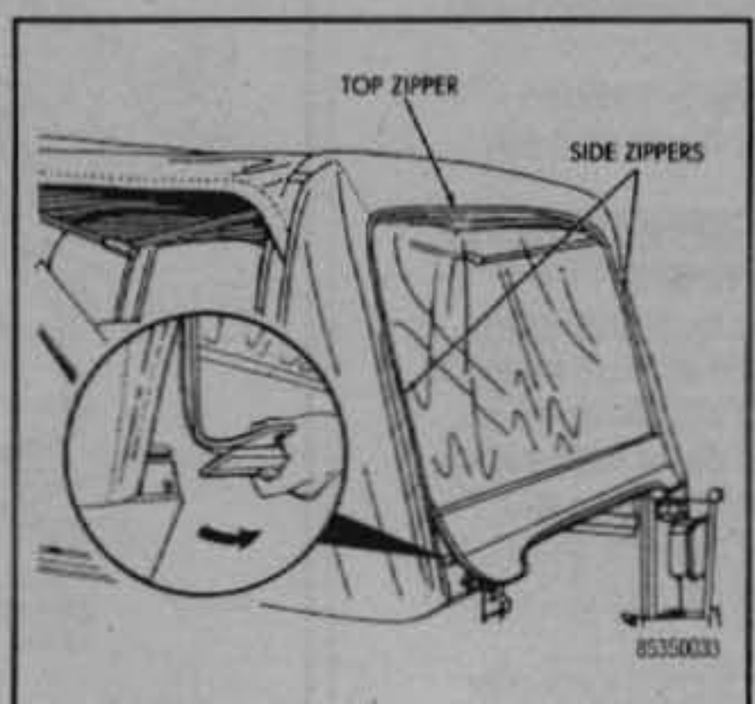

Fig. 32 Rear curtain top and side zippers

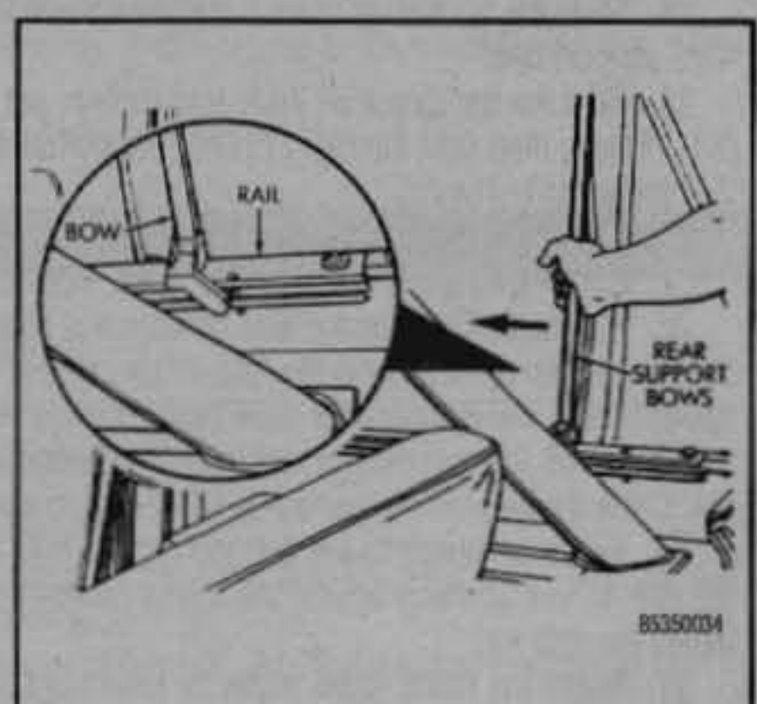

Fig. 33 Releasing the rear support bows

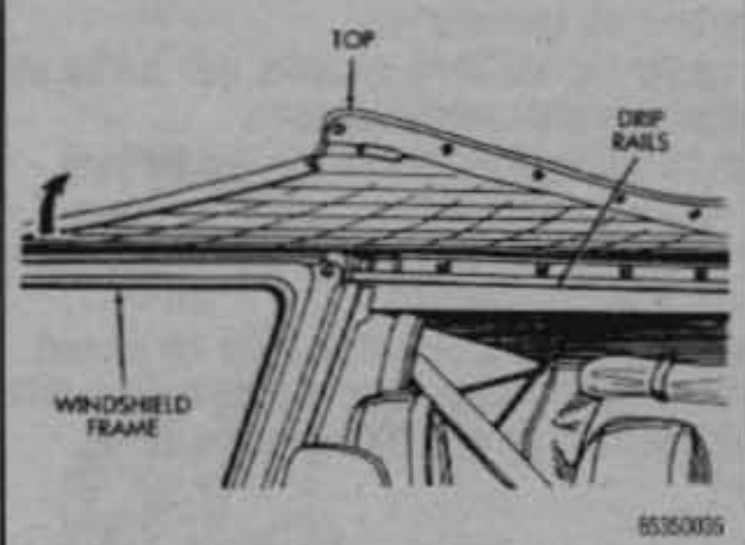

Fig. 34 Unfastening the top

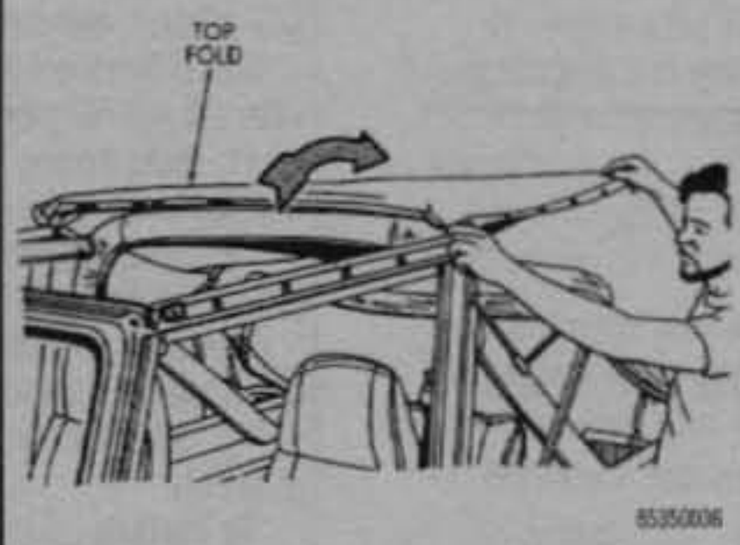

Fig. 35 Folding the top rearward

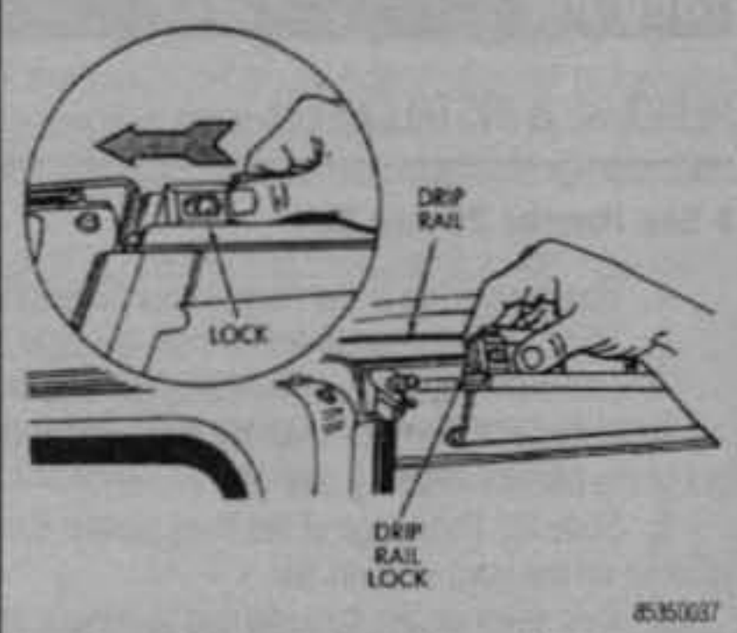

Fig. 36 Disengaging the drip rail lock

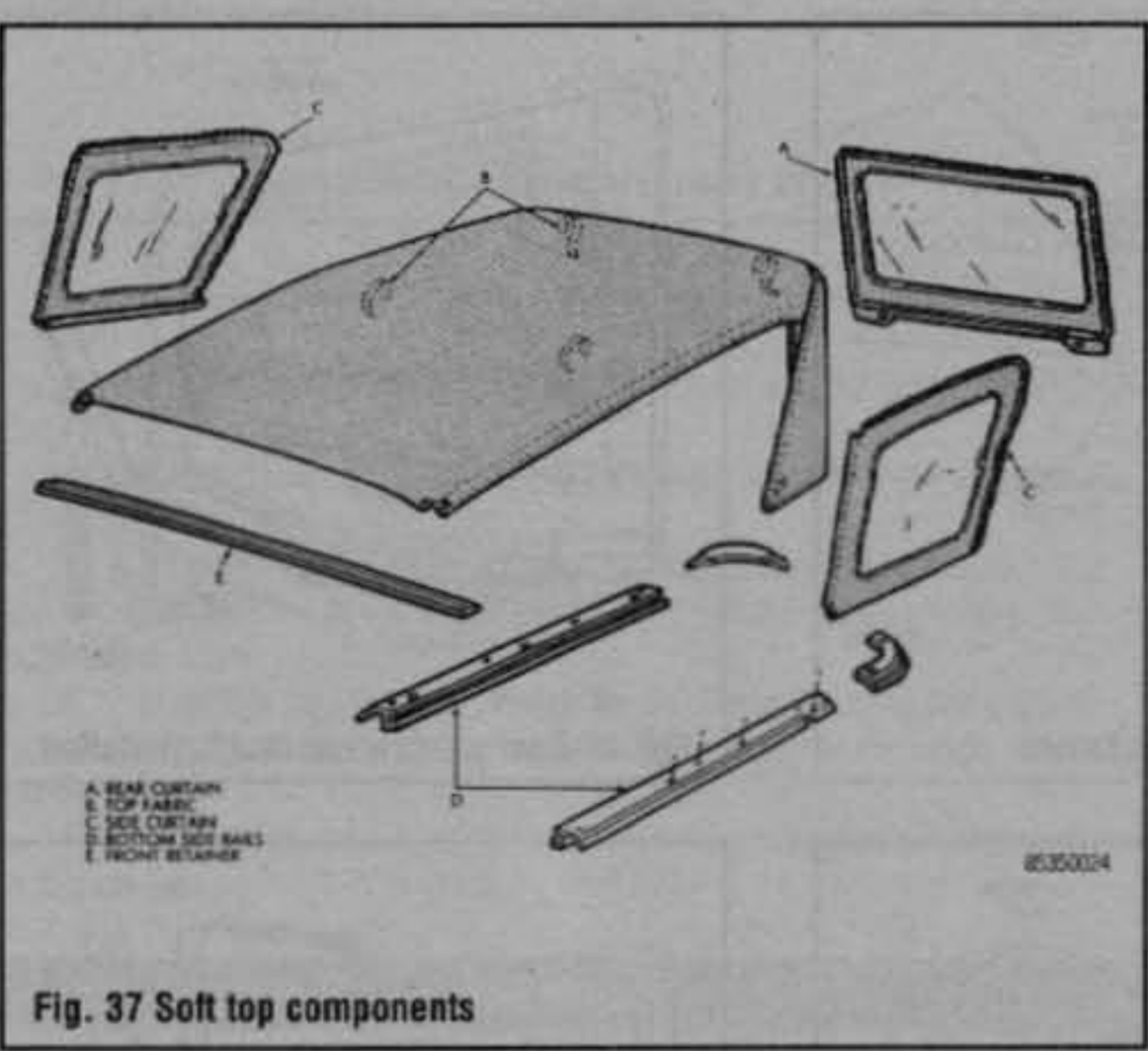

Fig. 37 Soft top components

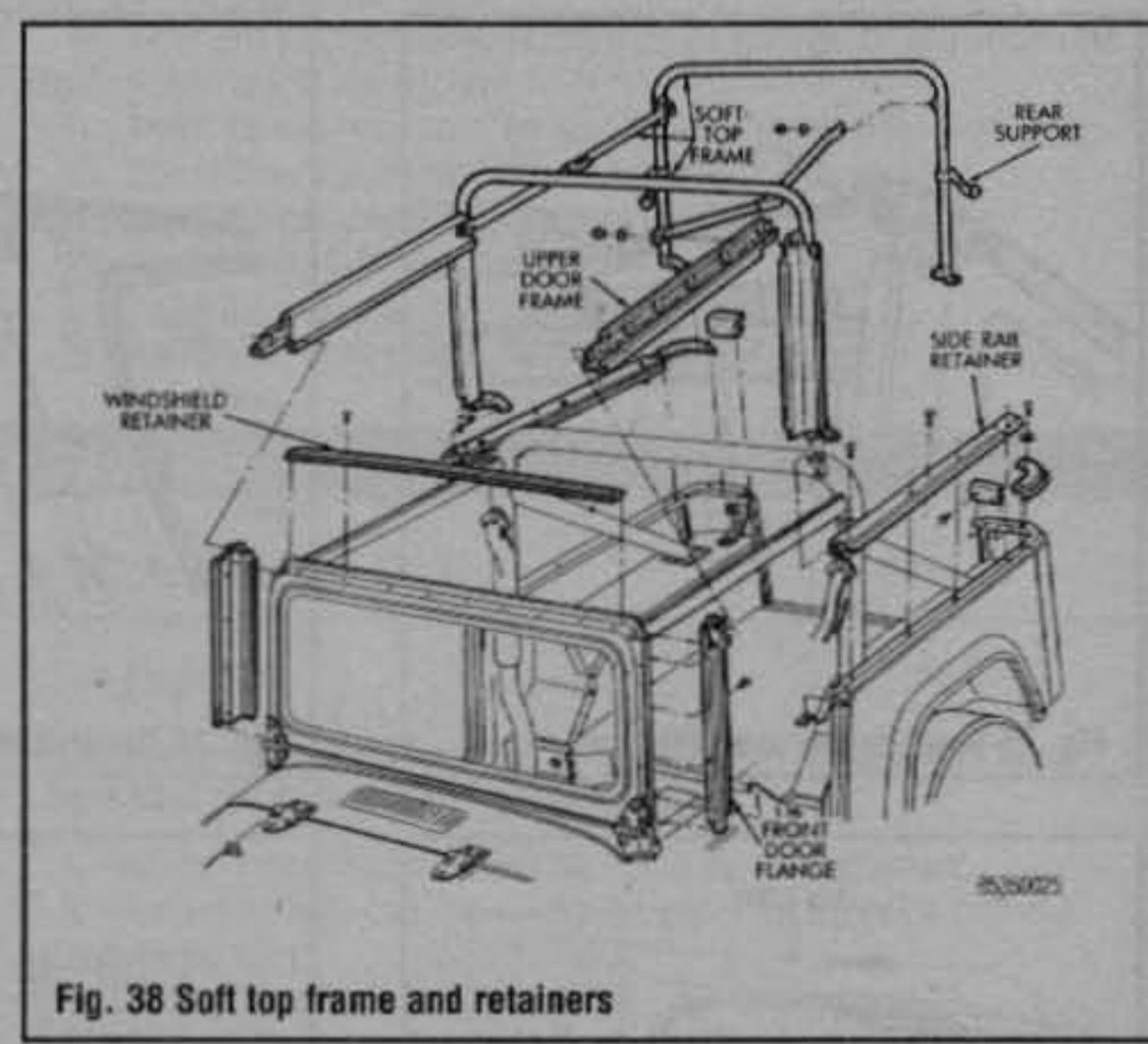

Fig. 38 Soft top frame and retainers

17. Grab the side rails and pull the entire top assembly up and forward.
18. Push the front of the drip rail onto the lock pin on the windshield frame, then slide the lock rearward.
19. Insert the front edge of the top of the retainer on the windshield frame, then attach the snap at each corner of the windshield.
20. Make sure the front support bow is pushed all the way forward.
21. Make sure the rear corners of the top are completely inserted into the retaining rail.
22. Pull the bottom of the rear support bows back until they snap into the notch in the side rails. Be sure the rear zippers of the side windows are not caught or folded behind the rear support bow.
23. Push the spreader bars upward until they snap into place.
24. Slide the front edge of each curtain up into the retainer channel on the front support bow.
25. Start the top zipper on each side curtain, but zip only 2–3 inches (51–76mm), then start the rear zipper at the bottom corner. Again, zip it only 2–3 inches (51–76mm).
26. Fasten the front and rear snap tabs on the side curtains to the inside rail.
27. Completely close both zippers in the side window curtains.
28. Pull down firmly on the side curtains and then press the bottom edge of the side curtain up and under the retainer rail. start at one end and work toward the opposite end. The bottom edge must be completely inserted into the retainer rail.
29. Unroll the rear curtain and insert the bottom edge into the retainer channel. Close the zippers on the rear window curtain and fasten the side snaps
30. Fasten all snaps to the drip rails above both doors. Slide the snaps on the rails to line up the snaps on the top as necessary. Tuck the edge of the fabric inside the drip rail.
31. Install the fabric upper doors by inserting the pins into the lower door grommets. Fasten the 6 snaps along the bottom edge.

Hardtop

REMOVAL & INSTALLATION

See Figure 39

1. Remove the hardtop-to-windshield frame screws.
2. Remove the hardtop-to-rear quarter panel bolts.
3. Disconnect electrical connectors such as the dome lamp.

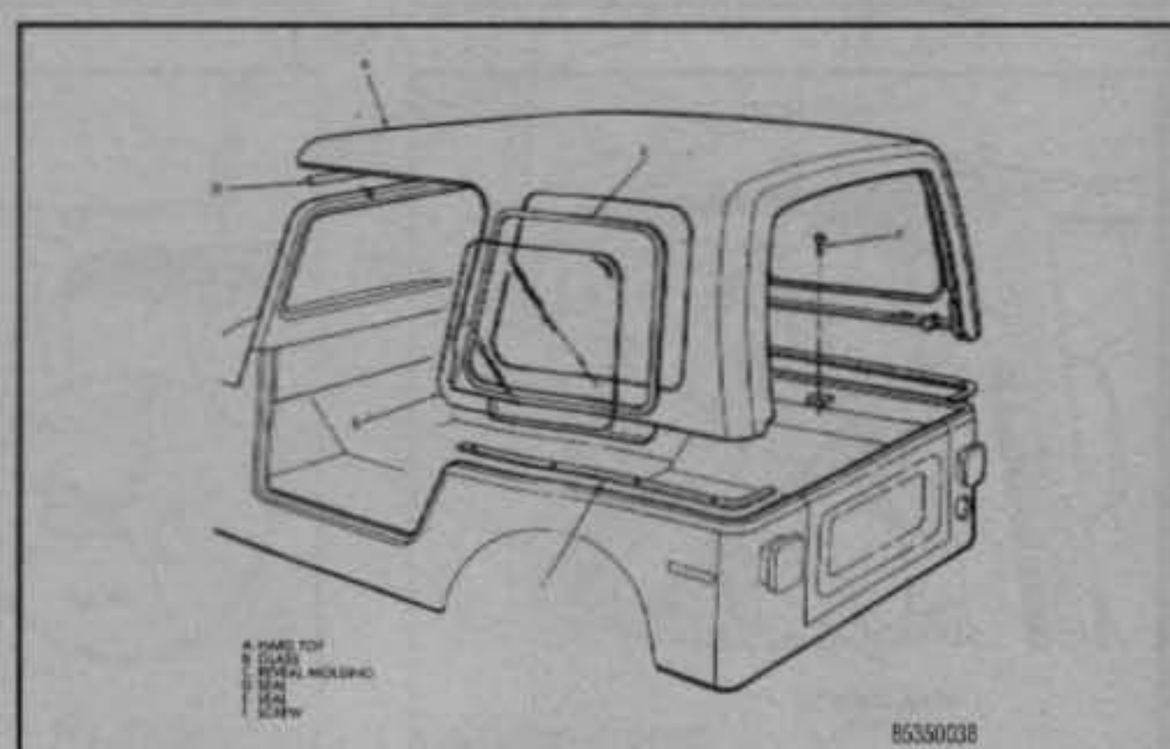

Fig. 39 Hard top components

4. Lift the top from the Jeep, being careful to avoid damage to the foam seals.
5. Installation is the reverse of removal.

External Spare Tire Carrier

REMOVAL & INSTALLATION

See Figure 40

1. Remove the tire and wheel from the wheel bracket.
2. Remove the screws attaching the wheel bracket to the tailgate.
3. Remove the bracket and gaskets from the tailgate.
4. Remove the screws that attach the stop bracket to the rear panel and the bumpers to the tailgate.
5. Remove the stop bracket and the bumpers from the vehicle.

To install:

6. Install the stop bracket to the rear panel and the bumpers to the tailgate and tighten the retaining screws to 95 inch lbs. (11 Nm).
7. Install the gaskets and wheel bracket to the tailgate and tighten the retaining screws to 204 inch lbs. (23 Nm).

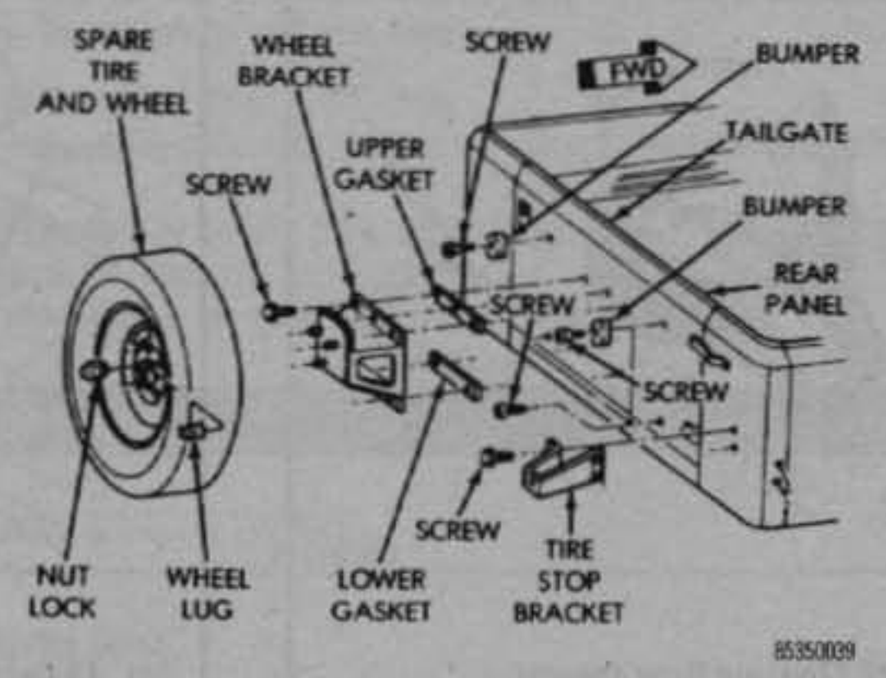

Fig. 40 Spare tire carrier

8. Install the tire and wheel to the wheel bracket and tighten the wheel lug nuts and the nut lock to 50 ft. lbs. (68 Nm).

INTERIOR

Instrument Panel

REMOVAL & INSTALLATION

See Figure 41

1. Disconnect the negative battery cable.
2. If equipped with a soft top, disconnect the top from the windshield frame, drip rails and door flanges.
3. If equipped with a hard top, disconnect the top from the windshield frame. Loosen the retainer screws, tilt the top rearward and prop the top away from the windshield.
4. Protect the hood area in front of the windshield, remove the windshield-to instrument panel retainers, then tilt the windshield forward onto the hood.
5. Remove the instrument cluster bezels.
6. Remove the assist handle, glove box door and hinge and box assembly.
7. Remove the screws attaching the pad to the instrument panel and remove the pad.

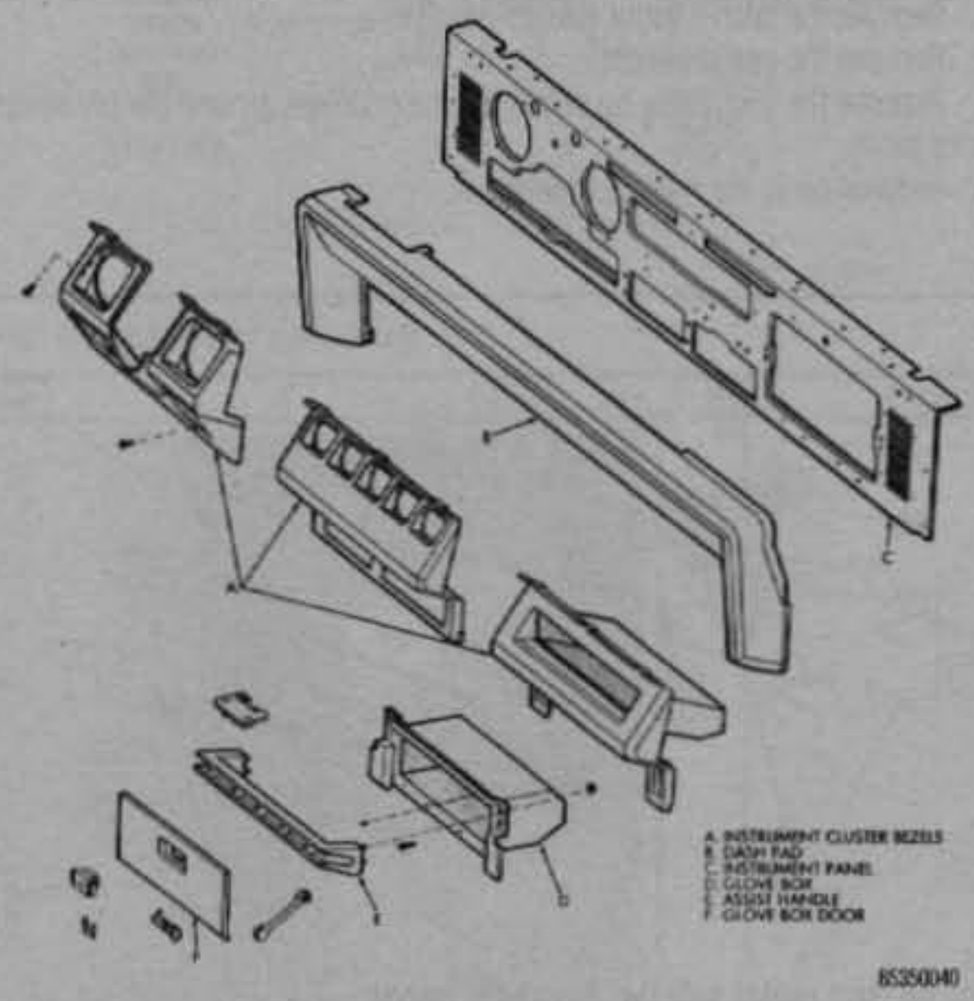

Fig. 41 Instrument panel components

8. If equipped with air conditioning, remove the screws attaching the evaporator assembly to the instrument panel and lower the evaporator assembly.
9. Remove the screws retaining the steering column bezel to the dash panel and remove the bezel.
10. Disconnect the parking brake bracket from the dash panel.
11. Disconnect the speedometer cable and the instrument cluster wires.
12. Disconnect the heater control cables from the damper door levers.
13. Place the automatic shift lever in park.
14. Remove the steering wheel as outlined in Section 6.
15. Remove the roll pin attaching the shift lever to the shift bowl and remove the shift lever.
16. Remove the instrument panel-to-cowl panel retaining screws and remove the instrument panel.

To install:

17. Install the instrument panel to the cowl panel and install the retaining screws.
18. Install the pad to the instrument panel.
19. Connect the speedometer cable and the instrument cluster wires.
20. Install the instrument cluster bezels.
21. Raise and install the evaporator.
22. Connect the heater control cables to the damper door levers.
23. Connect the parking brake bracket to the dash panel.
24. Install the steering wheel and shift lever.
25. Instal the steering column bezels.
26. Install the glove box hinges and door.
27. Move the windshield to the upright position and install the windshield retainers.
28. If equipped with a hard top, remove the prop, then position the top on the body and install the retaining screws.
29. If equipped with a soft top, install the top to the windshield frame, drip rails and door flanges.
30. Connect the negative battery cable.

Floor Console

REMOVAL & INSTALLATION

See Figures 42 and 43

1. Open the console cover.
2. Remove the screws attaching the console to the floor panel, then carefully remove the console from the vehicle.
3. Installation is the reverse of removal. Be careful not to overtighten the screws and damage the console.

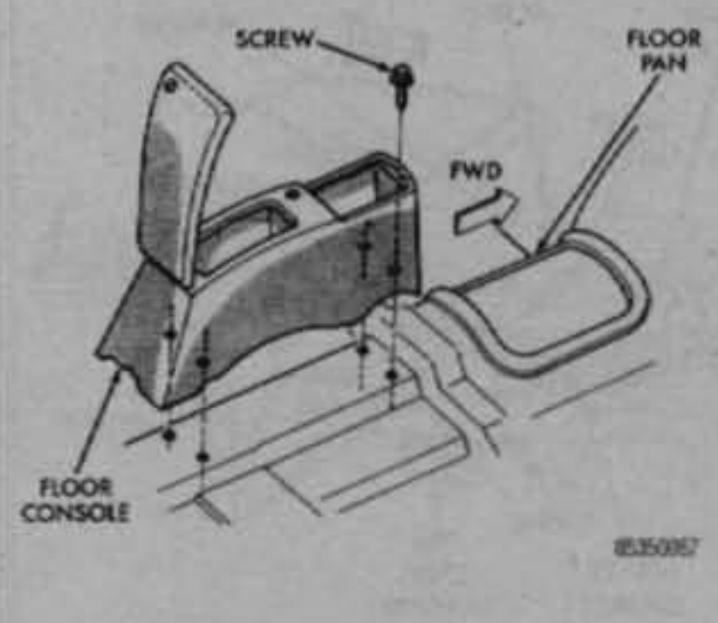

Fig. 42 Standard floor console

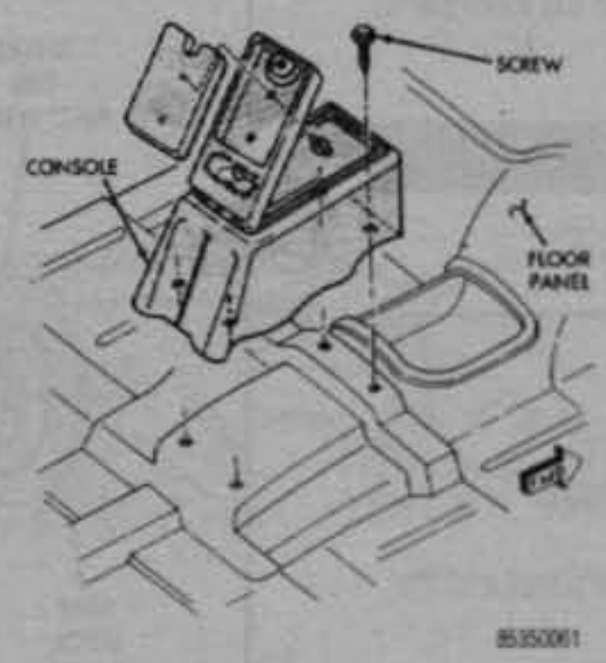

Fig. 43 Deluxe floor console

Fig. 44 Removing the door inside assist handle

Fig. 45 Removing the door inside release handle

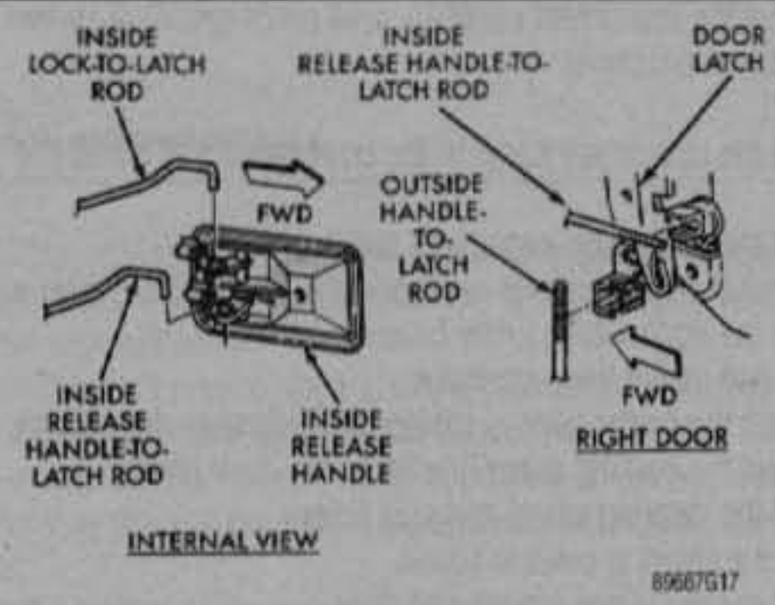

Fig. 46 Door latch release handle and rods

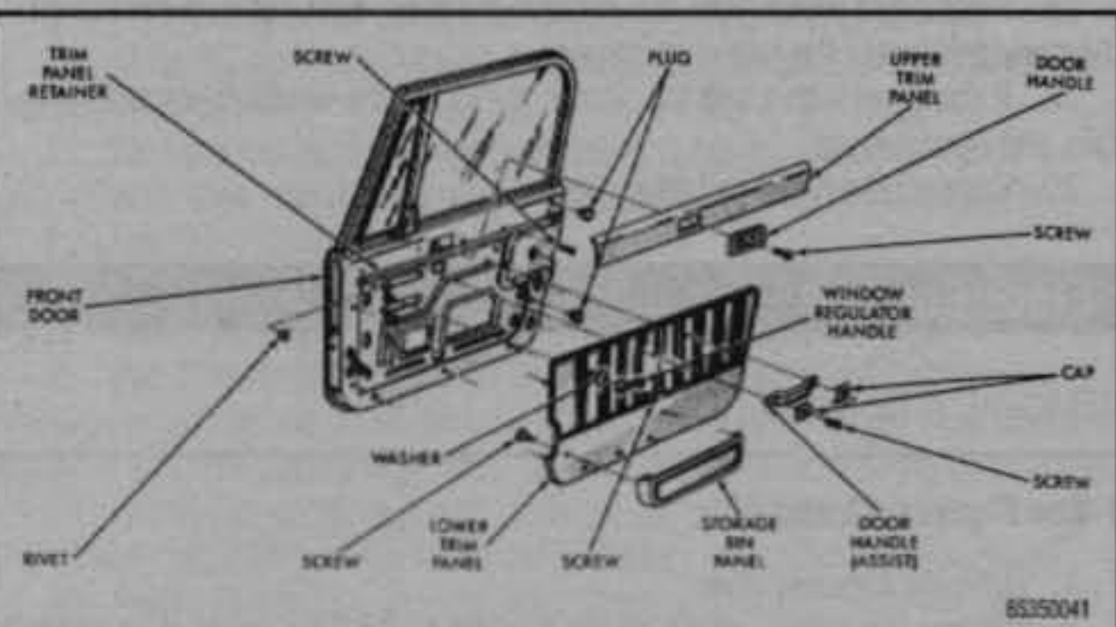

Fig. 47 Full metal hard top door trim panel

Door Trim Panel

REMOVAL & INSTALLATION

Hardtop

See Figures 44, 45, 46 and 47

1. Remove the door assist handle.
2. Remove the door latch release handle.
3. Remove the window crank handle.
4. Carefully pry the trim panel clips from the door. Be very careful! It's easy to tear the trim panel or break loose the clip from the panel. Inexpensive tools are made for this job and are available at most auto parts stores.
5. Remove the watershield.
6. Installation is the reverse of removal.

Soft Top

See Figure 48

1. Open the door.
2. Turn the window retaining sleeves ¼ turn to the left, then pull them up and out of the door.
3. Remove the window from the door by detaching the soft top snap fasteners and pulling the window up.
4. Remove the latch interior release handle.
5. Remove the assist handle.
6. Remove the trim panel by detaching the retainers around the perimeter of the trim panel.
7. Installation is the reverse of removal.

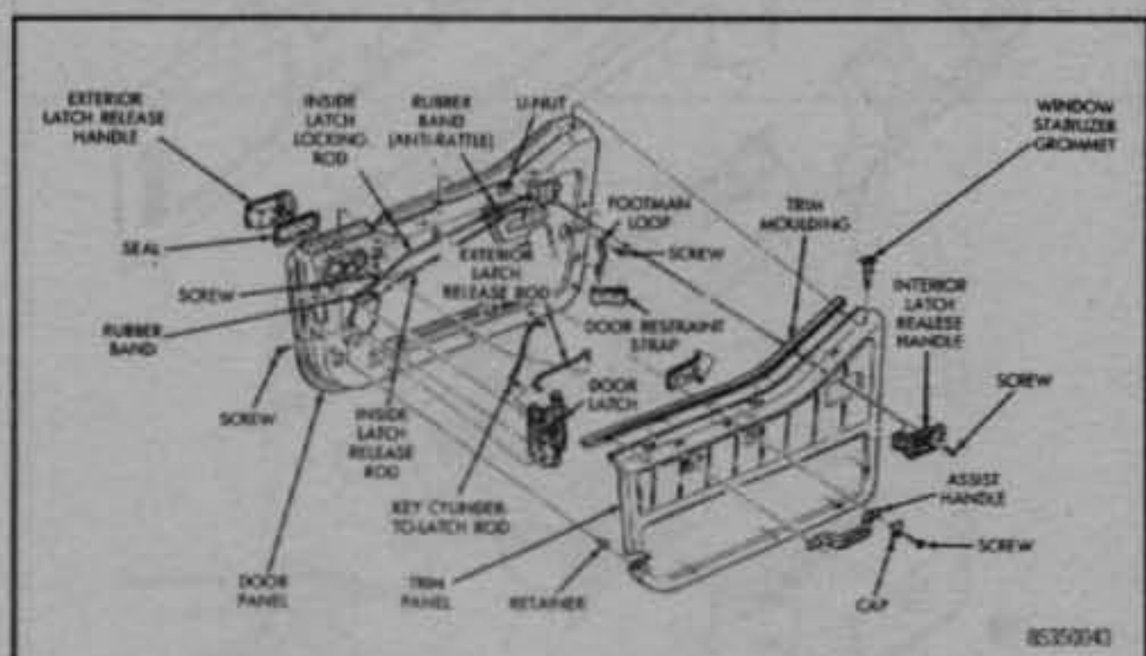

Fig. 48 Half metal soft top door trim panel

Headliner

REMOVAL & INSTALLATION

See Figure 49

WARNING

The headliner is a one-piece, moulded component. Its flexibility is limited, so it must not be bent when handled, or damage could result.

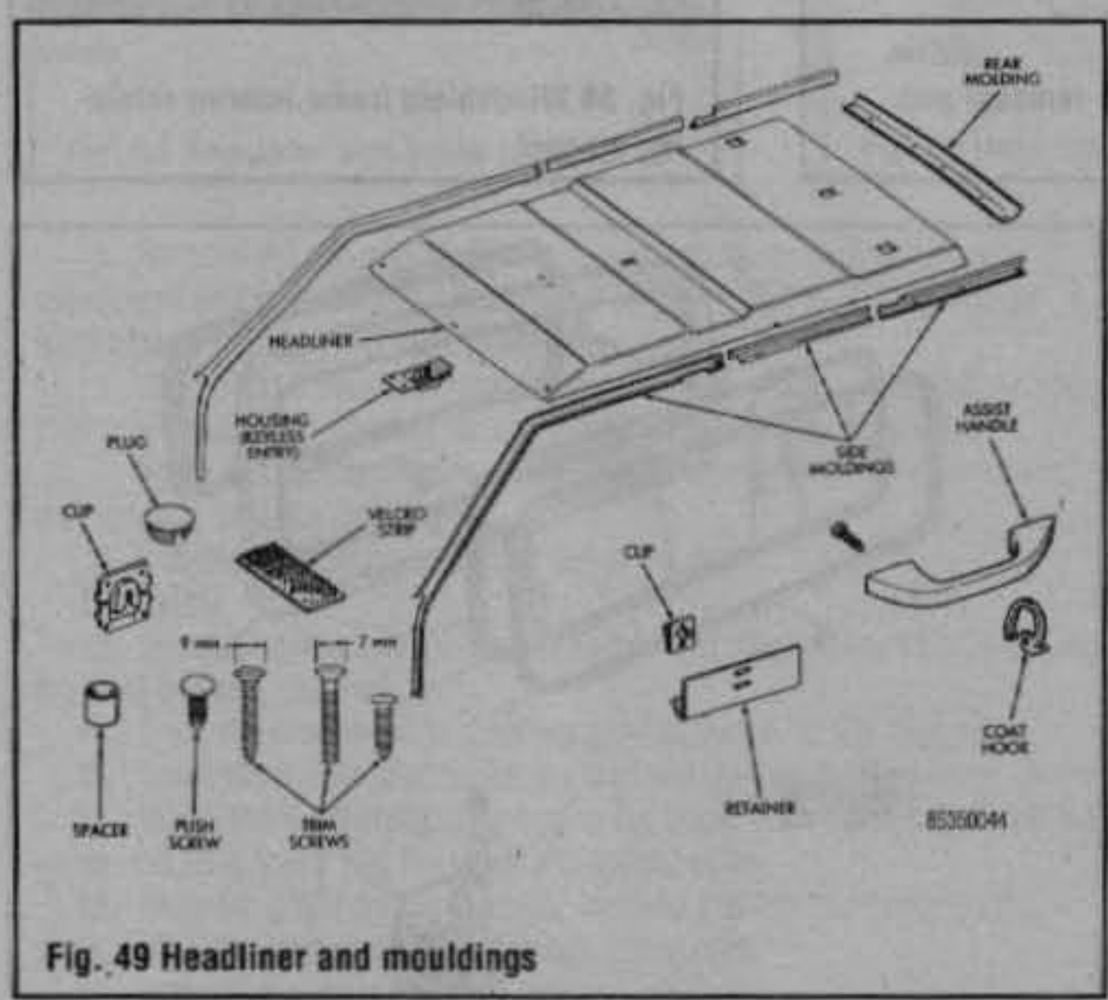

Fig. 49 Headliner and mouldings

The headliner and trim mouldings are attached with a combination of screws, Velcro® strips and trim clips.

1. Remove all of the trim mouldings.
2. Remove the dome lamps, assist handle and other attached components.
3. Make sure all the trim clips, screws and Velcro® strips are disengaged and remove the headliner.
4. Installation is the reverse of removal.

Door Latch

REMOVAL & INSTALLATION

Half Metal Door

See Figures 50 and 51

1. Remove the interior door trim panel.
2. Remove the screws from the door latch handle, disconnect the latch release rod and remove the handle.
3. Remove the remove the retaining screws and remove the door latch with the rods attached.
4. Installation is the reverse of removal.

Full Metal Door

See Figure 52

1. Remove the interior door trim panel.
2. Remove the door latch cover.
3. Disconnect the inside release handle-to-latch rod.
4. Disconnect the lock cylinder-to-latch rod.
5. Disconnect the inside lock-to-latch rod.
6. Disconnect the external handle-to-latch rod from the door latch.
7. Remove the remove the retaining screws and remove the door latch from the door.
8. Installation is the reverse of removal.

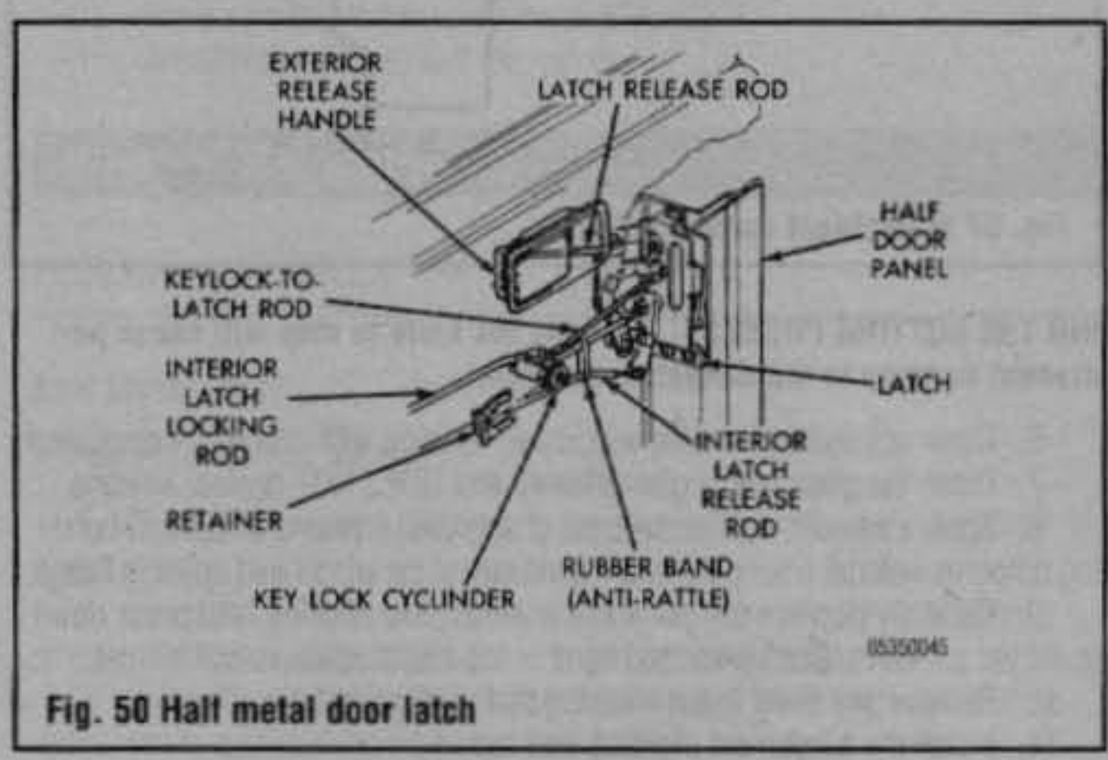

Fig. 50 Half metal door latch

Tailgate Latch and Release Handle

REMOVAL & INSTALLATION

See Figures 53 and 54

1. Open the tailgate and remove the screw from the latch mechanism housing.
2. Disconnect the latch linkage.
3. Remove the latch-to-tailgate screws.
4. Remove the retaining clip from the lock cylinder.
5. Remove the handle retaining screw and lift out the handle.
6. Remove the latch from the tailgate.
7. Installation is the reverse of removal.

Fig. 51 Removing the door lock striker

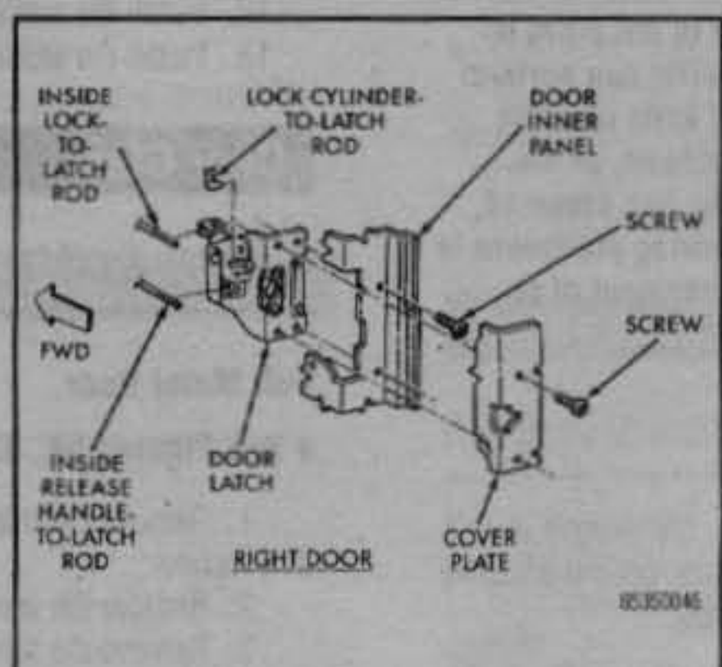

Fig. 52 Full metal door latch installation

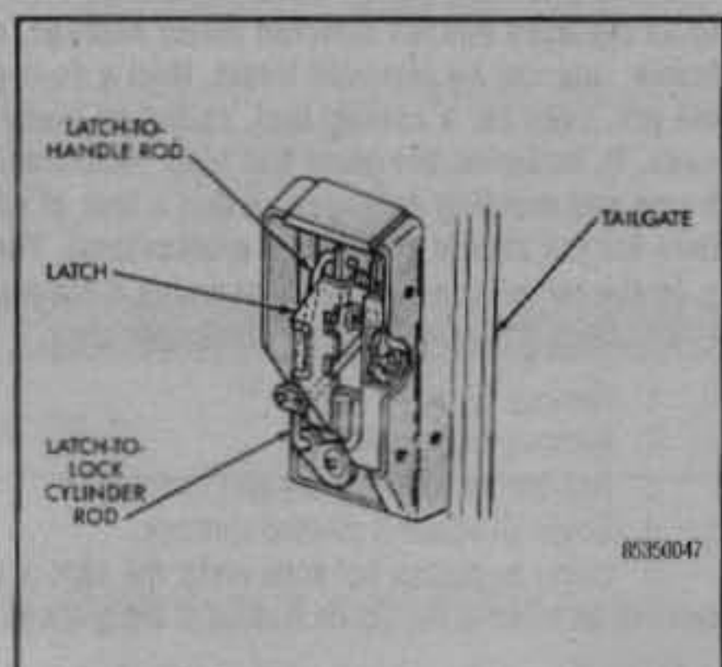

Fig. 53 Tailgate latch and rods

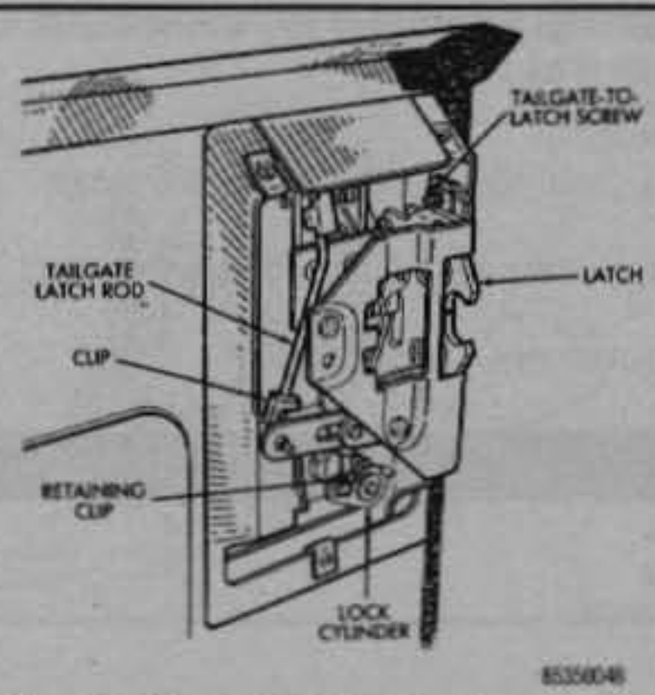

Fig. 54 Tailgate latch installation

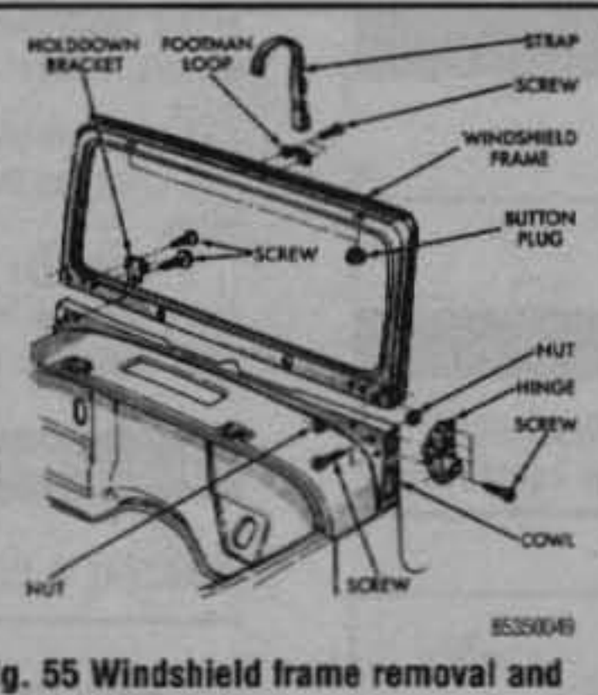

Fig. 55 Windshield frame removal and installation

Fig. 56 Windshield frame interior retaining bracket

Windshield Frame

See Figures 55 and 56

REMOVAL & INSTALLATION

1. Remove the windshield wipers.
2. For vehicles equipped with a soft top, disconnect the fabric top from the windshield frame retainer rail.
3. For vehicles equipped with a hard top, disconnect the top from the windshield frame. Loosen the retaining screws, tilt the top rearward and support the top away from the windshield frame.
4. Remove the retaining screws and the windshield/door hinges from the cowl.
5. Remove the windshield frame and glass from the cowl as a unit.
6. If necessary, remove the sunvisors.

To install:

7. Position the windshield frame on the cowl.
8. Install the hold-down bracket retaining screws in the cowl.
9. Install the windshield/door hinge retaining screws.
10. Connect the top of the windshield frame.
11. For vehicles equipped with a soft top, connect the fabric top to the windshield frame retainer rail.
12. For vehicles equipped with a hard top, remove the supports, tighten the retaining screws and connect the top to the windshield frame.
13. Install the windshield wipers.
14. If removed, install the sunvisors.

Windshield Glass

REMOVAL & INSTALLATION

See Figure 57

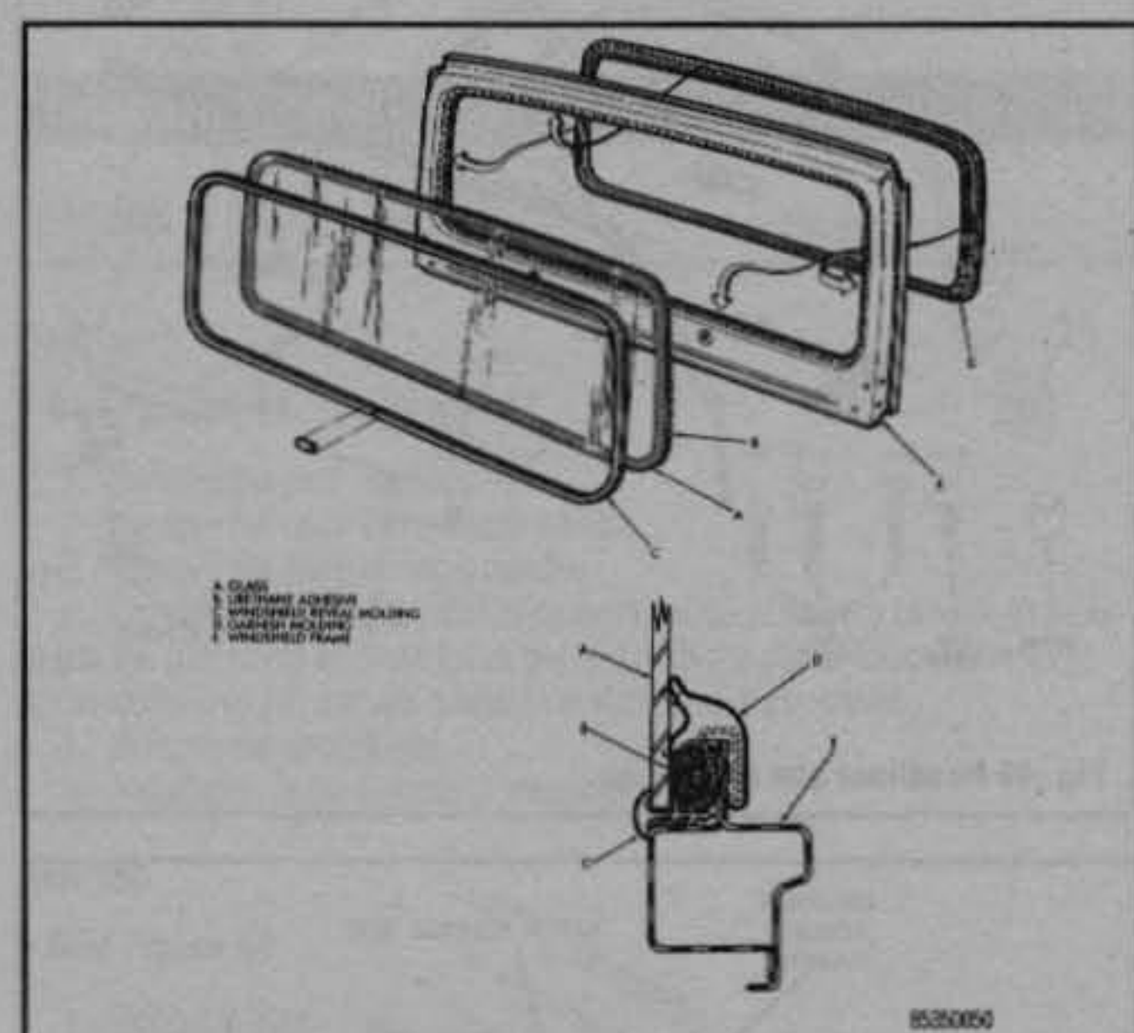

Fig. 57 Windshield components

These vehicles employ a bonded windshield system. If the windshield to be replaced has not suffered major damage, either to the glass or frame, and can be removed intact, then a do-it-yourselfer can perform the job. Even so, a special tool, called an electric hot knife must be used. If, however, the glass has been extensively damaged, or the frame and molding damaged so that a loss of adhesion has occurred, then the job should be left to a professional. The following procedure is a do-it-yourselfer procedure, assuming a simple replacement of an intact glass and good seal-to-glass adhesion.

1. Remove the wiper arms.
2. Remove the sun visors.
3. Remove the molding cap and molding.
4. Cover all adjacent painted surfaces.
5. Using an electric hot knife under the edge of the glass, cut the adhesive material as close to the inside surface of the glass as possible.

Make sure that an even, uniform bead of sealer remains on the body for installation purposes. NEVER ALLOW THE HOT KNIFE TO STOP DURING THE CUTTING PROCESS! Allowing the knife to stop will cause permanent damage to the adhesive material.

6. Clean old sealant from the windshield opening with naphtha or equivalent.
7. Clean the glass with a glass cleaner that DOES NOT contain silicone.
8. Apply a smooth, continuous bead of approved urethane windshield bonding adhesive material around the entire perimeter of the windshield opening flange.
9. Carefully position the glass in the windshield opening, and press down to set the adhesive. Don't press too hard or too much adhesive will be lost.
10. Remove any sheet metal masking that you applied.
11. Install the windshield molding and cap.
12. Install the sun visors.
13. Install the wiper arms.

Door Glass

REMOVAL & INSTALLATION

Full Metal Door

See Figures 58, 59 and 60

1. Remove the interior door trim panel and waterdam as outlined earlier in this section.
2. Remove the window glass down stop bumper.
3. Remove the screws that attach the regulator arm guide to the window glass, then remove the screws, bushings, nuts and guide from the glass.
4. Lower the window glass to the bottom of the door.

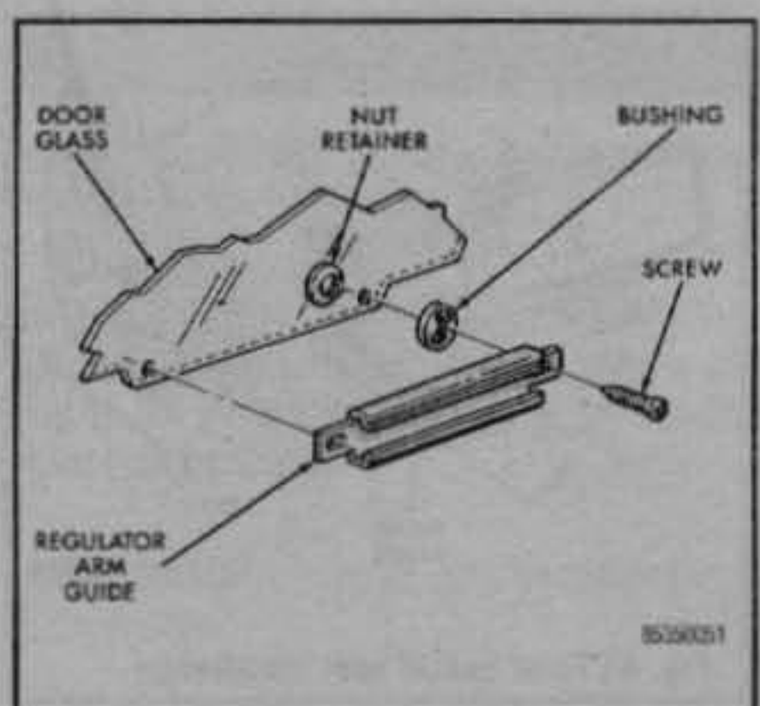

Fig. 58 Regulator arm guide installation

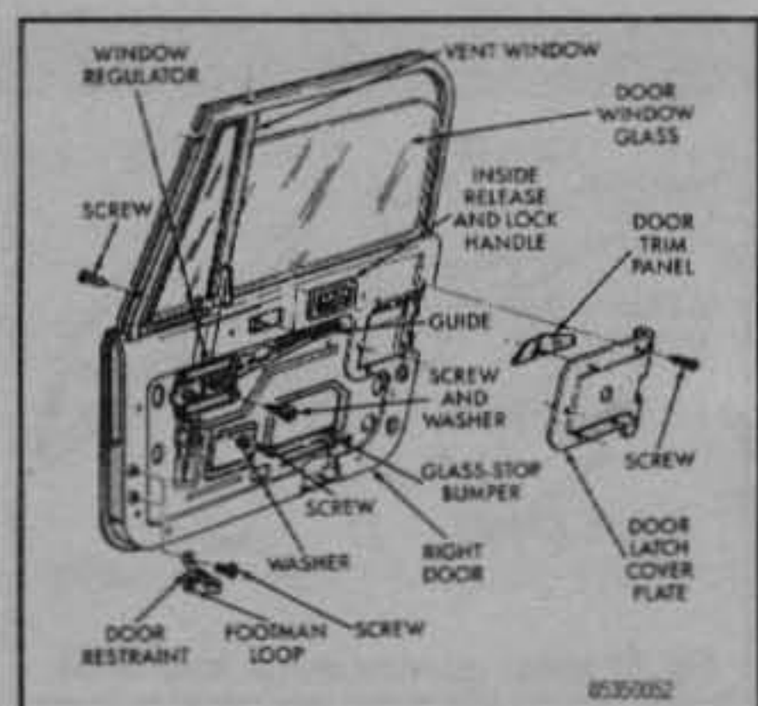

Fig. 59 Door internal components

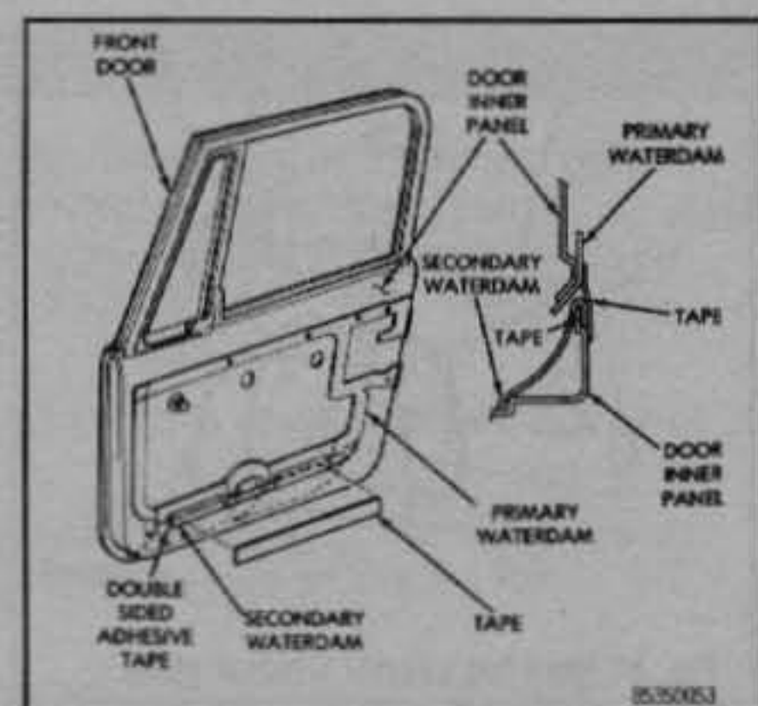

Fig. 60 Door waterdam

5. Remove the division channel upper attaching screw and the lower adjustment screw. Remove the front 3 inches (76mm) of the window glass weatherstrip seal from the door upper frame.

6. Separate the division channel from the front window glass rubber seal, then pull the division channel up and in toward the inside of the vehicle.

7. Raise and tilt the window glass toward the hinge side of the door and disengage it from the rear channel.

8. Pull the window glass up and out of the door.

To install:

9. Insert the glass into the door with the front tilted down, while engaging the front and rear channels.

10. Slide the window glass downward to the bottom of the door panel.

11. Lower the division channel into the door and position the glass in the channel.

12. Install the weatherstripping seal in the upper door frame and install the upper attaching screw and the lower adjustment screw.

13. Slide the guide on the regulator arm and position the guide on the glass. Install the retaining nuts, bushings and screws.

14. Install the glass down-stop bumper.

15. Make sure that the window works properly.

16. Install the waterdam and trim panel.

Window Regulator

REMOVAL & INSTALLATION

Full Metal Door

• See Figures 58, 59 and 60

1. Remove the interior door trim panel and waterdam as outlined earlier in this section.

2. Lower the window glass to expose the regulator arm guide retainer screws, then remove the bushings, nuts and the guide channel.

3. Raise the window to thew full up position and secure it in position by using masking tape to tape it to the door frame.

4. Remove the division channel lower adjusting screw.

5. Remove the regulator attaching screws.

6. Push the division channel outward and remove the regulator through the access hole.

7. Installation is the reverse of removal. Check the operation of the window.

Quarter Glass Window

REMOVAL & INSTALLATION

Hardtop

• See Figure 61

1. Cover the painted areas with a protective covering.

2. Using a razor knife, make a preliminary cut around the perimeter of the window glass along the glass edge.

3. Cut the adhesive bead with a hot knife and a hooked blade.

4. Start the hot knife between the glass and the urethane. Next cut the adhesive as close to the glass edge as possible. Allow as much adhesive to remain on the window opening as possible.

➡For best cutting results, clean the knife blade frequently with steel wool while the blade is hot. Also while cutting through the urethane with a hot knife, do not allow the blade to remain stationary in any one place.

5. Remove the window glass from the opening.

To install:

6. Inspect the window opening and prime any bare spots with a urethane primer and allow at least 18 minutes to dry.

7. Shave off and level any urethane bead high spots so that the window glass will fit flush when installed.

8. Check the condition of the window moulding and replace if damaged.

9. Clean the outer edge of the window with naphtha or equivalent.

10. Prime the outer perimeter of the interior side of the glass ⅛ in. (3mm) from the edge with a wipe-off type urethane primer, and wipe the glass dry after application.

11. Install the glass in the opening and inspect and fill gaps in the urethane as necessary.

12. Adjust the window glass position until it is aligned with the opening and the adhesive.

13. Remove the window glass and place it on a flat surface.

14. If the replacement glass does not have blackout primer, mix and apply blackout primer to a ⅝ inch (16mm) surface area around the interior side of the glass edge. Allow to dry at least 12 minutes.

15. Apply a ⅛ inch (3mm) diameter bead of urethane to the surface area with the blackout primer on the interior side of the glass.

WARNING

The adhesive begins to cure in 10–15 minutes, so be prepared to install the glass immediately after applying the adhesive.

16. Make reference marks with a grease pencil or tape strips and align the window in the opening.

17. Force the glass inward just enough to wet-out and set the urethane. Be careful not to excessively squeeze out the adhesive.

18. Lightly spray and water test the window.

19. Install the window reveal moulding.

Inside Rearview Mirror

REMOVAL & INSTALLATION

• See Figure 62

1. Loosen the mirror set and slide the mirror up and off of the retaining bracket.

2. Installation is the reverse of removal. Do not overtighten the set screw.

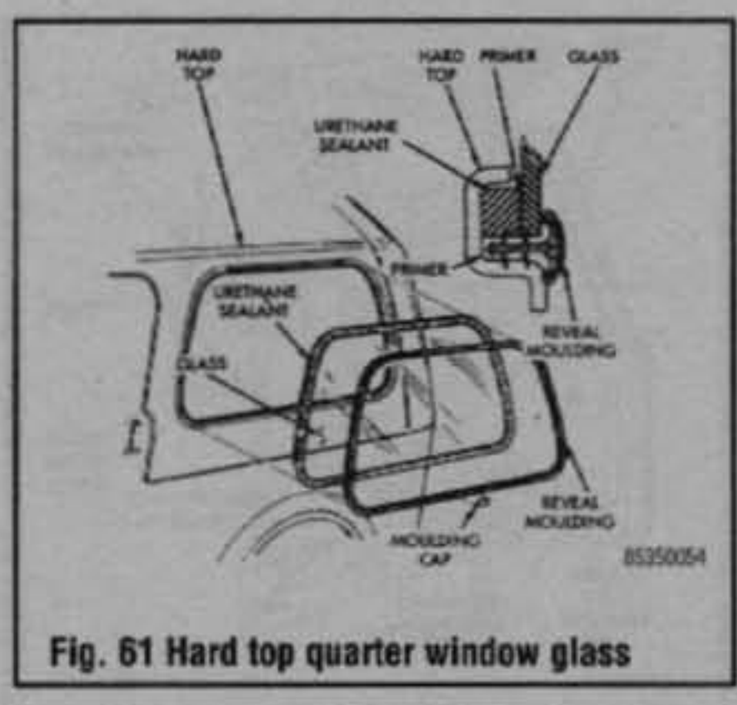

Fig. 61 Hard top quarter window glass

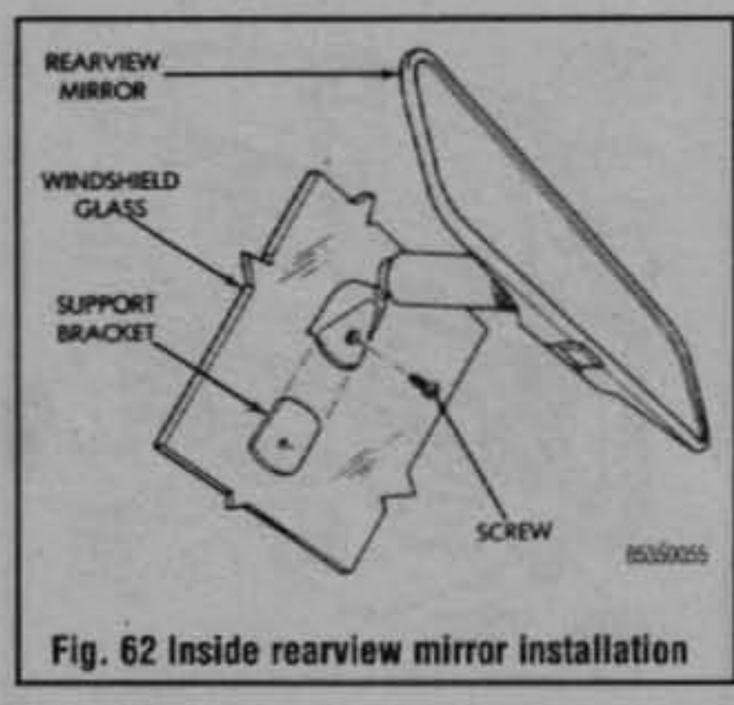

Fig. 62 Inside rearview mirror installation

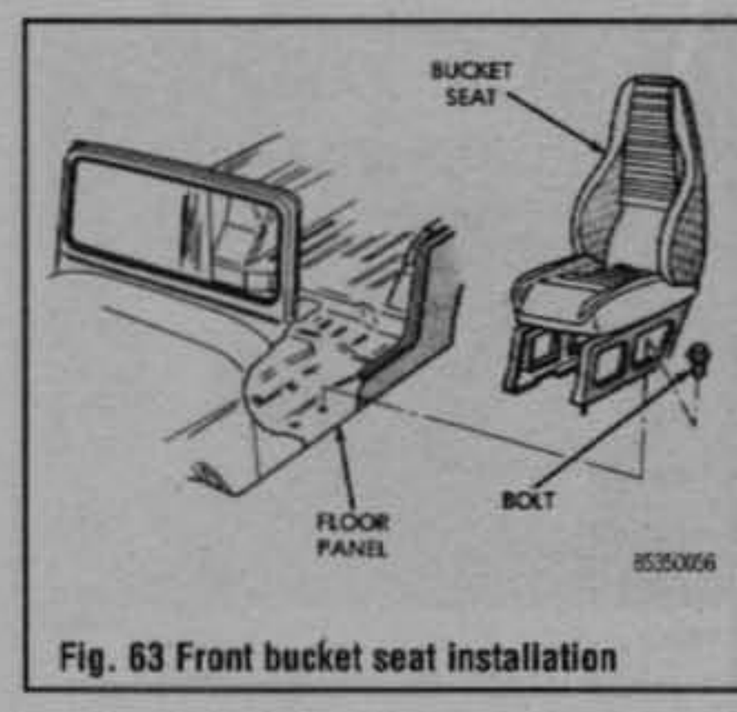

Fig. 63 Front bucket seat installation

Seats

REMOVAL & INSTALLATION

Front

See Figure 63

➡The front seat frames are attached to the floor panel.

1. Unbolt the seat frame from the floor pan.
2. Remove the seat.
3. Installation is the reverse of removal. Torque the bolts to 15–30 ft. lbs. (20–41Nm).

Rear

See Figure 64

➡The rear bench seat pivot brackets are attached to the floor panel with screws. The front of the seat is attached to the pivot brackets with washers and hitch pins.

1. Disengage the strikers from the latches.
2. Remove the hitch pin, disengage the seat frame from the pivots and remove the seat from the vehicle.

To install:

3. Place the seat into position on the floor panel and engage the seat frame with the pivots.
4. Install the hitch pin.
5. Pivot the seat rearward and engage the strikers with the latch brackets.

Seat and Shoulder Belts

REMOVAL & INSTALLATION

Front

See Figure 65

1. Remove the cover, remove the shoulder belt buckle anchor bolt from the floor panel and remove the belt buckle.
2. Remove the cap, the shoulder belt upper bolt, washer and guide from the sport bar.
3. Remove the lower anchor bolt that attaches the belt to the floor panel and remove the belt.

To install:

4. Position the end of the shoulder belt at the floor panel and the retractor at the door sill.
5. Install the anchor bolts and tighten to 30 ft. lbs. (41 Nm).
6. Position the shoulder belt guide on the sport bar, tighten the anchor bolt to 30 ft. lbs. (41 Nm), and install the bolt cap.
7. Install the shoulder belt buckle at the floor panel, tighten the anchor bolt to 30 ft. lbs. (41 Nm), and install the bolt cover.

Rear

See Figure 66

1. Remove the cover, remove the shoulder belt buckle anchor bolt from the floor panel and remove the belt buckle.
2. Remove the cap, the shoulder belt upper bolt, washer and support/guide from the sport bar.
3. Remove the retractor anchor bolt from the quarter panel.
4. Remove the lower anchor bolt that attaches the belt to the floor panel and remove the belt.

To install:

5. Position the lower end of the shoulder belt at the floor panel and the retractor at the quarter panel.
6. Install the anchor bolts and tighten to 30 ft. lbs. (41 Nm).
7. Position the shoulder belt support/guide on the sport bar, tighten the anchor bolt to 30 ft. lbs. (41 Nm), and install the bolt cap.
8. Install the shoulder belt buckle at the floor panel, tighten the anchor bolt to 30 ft. lbs. (41 Nm), and install the bolt cover.

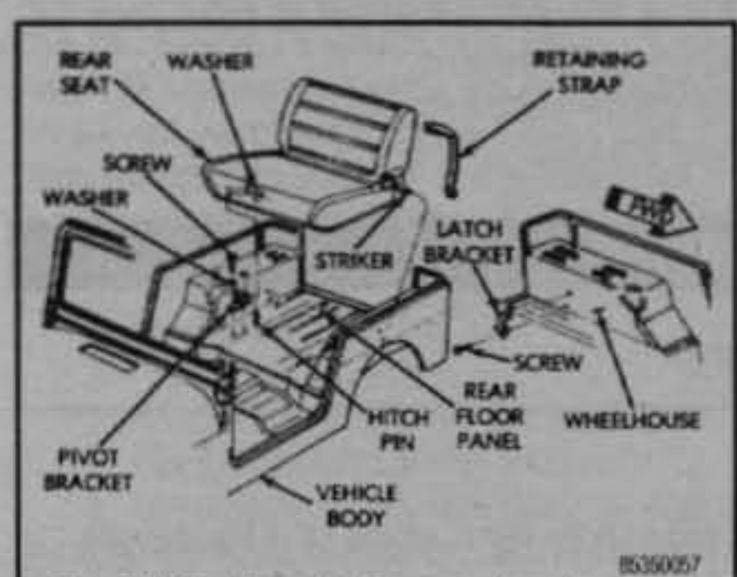

Fig. 64 Pivoting, folding rear bench seat installation

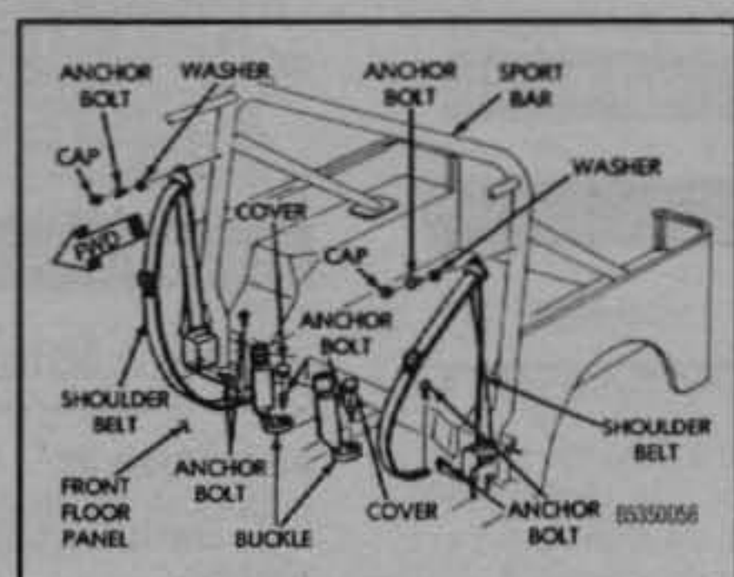

Fig. 65 Front seat belt installation

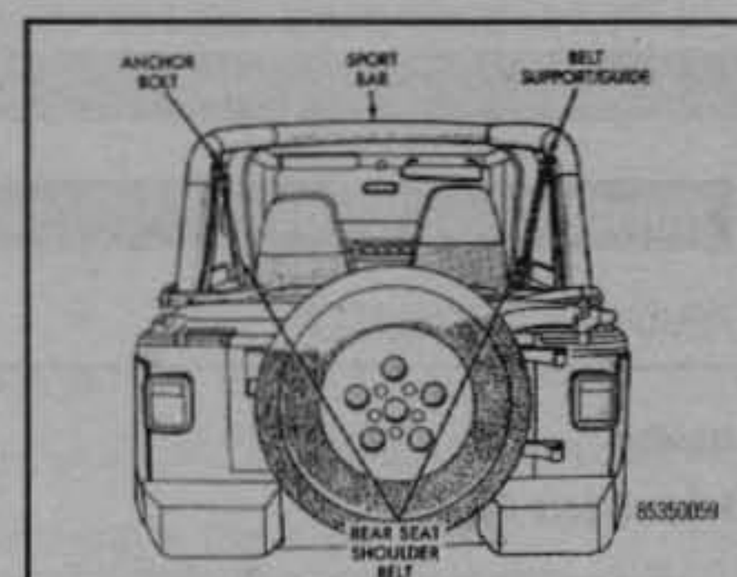

Fig. 66 Rear shoulder belts

GLOSSARY

AIR/FUEL RATIO: The ratio of air-to-gasoline by weight in the fuel mixture drawn into the engine.

AIR INJECTION: One method of reducing harmful exhaust emissions by injecting air into each of the exhaust ports of an engine. The fresh air entering the hot exhaust manifold causes any remaining fuel to be burned before it can exit the tailpipe.

ALTERNATOR: A device used for converting mechanical energy into electrical energy.

AMMETER: An instrument, calibrated in amperes, used to measure the flow of an electrical current in a circuit. Ammeters are always connected in series with the circuit being tested.

AMPERE: The rate of flow of electrical current present when one volt of electrical pressure is applied against one ohm of electrical resistance.

ANALOG COMPUTER: Any microprocessor that uses similar (analogous) electrical signals to make its calculations.

ARMATURE: A laminated, soft iron core wrapped by a wire that converts electrical energy to mechanical energy as in a motor or relay. When rotated in a magnetic field, it changes mechanical energy into electrical energy as in a generator.

ATMOSPHERIC PRESSURE: The pressure on the Earth's surface caused by the weight of the air in the atmosphere. At sea level, this pressure is 14.7 psi at 32°F (101 kPa at 0°C).

ATOMIZATION: The breaking down of a liquid into a fine mist that can be suspended in air.

AXIAL PLAY: Movement parallel to a shaft or bearing bore.

BACKFIRE: The sudden combustion of gases in the intake or exhaust system that results in a loud explosion.

BACKLASH: The clearance or play between two parts, such as meshed gears.

BACKPRESSURE: Restrictions in the exhaust system that slow the exit of exhaust gases from the combustion chamber.

BAKELITE: A heat resistant, plastic insulator material commonly used in printed circuit boards and transistorized components.

BALL BEARING: A bearing made up of hardened inner and outer races between which hardened steel balls roll.

BALLAST RESISTOR: A resistor in the primary ignition circuit that lowers voltage after the engine is started to reduce wear on ignition components.

BEARING: A friction reducing, supportive device usually located between a stationary part and a moving part.

BIMETAL TEMPERATURE SENSOR: Any sensor or switch made of two dissimilar types of metal that bend when heated or cooled due to the different expansion rates of the alloys. These types of sensors usually function as an on/off switch.

BLOWBY: Combustion gases, composed of water vapor and unburned fuel, that leak past the piston rings into the crankcase during normal engine operation. These gases are removed by the PCV system to prevent the buildup of harmful acids in the crankcase.

BRAKE PAD: A brake shoe and lining assembly used with disc brakes.

BRAKE SHOE: The backing for the brake lining. The term is, however, usually applied to the assembly of the brake backing and lining.

BUSHING: A liner, usually removable, for a bearing; an anti-friction liner used in place of a bearing.

CALIPER: A hydraulically activated device in a disc brake system, which is mounted straddling the brake rotor (disc). The caliper contains at least one piston and two brake pads. Hydraulic pressure on the piston(s) forces the pads against the rotor.

CAMSHAFT: A shaft in the engine on which are the lobes (cams) which operate the valves. The camshaft is driven by the crankshaft, via a belt, chain or gears, at one half the crankshaft speed.

CAPACITOR: A device which stores an electrical charge.

CARBON MONOXIDE (CO): A colorless, odorless gas given off as a normal byproduct of combustion. It is poisonous and extremely dangerous in confined areas, building up slowly to toxic levels without warning if adequate ventilation is not available.

CARBURETOR: A device, usually mounted on the intake manifold of an engine, which mixes the air and fuel in the proper proportion to allow even combustion.

CATALYTIC CONVERTER: A device installed in the exhaust system, like a muffler, that converts harmful byproducts of combustion into carbon dioxide and water vapor by means of a heat-producing chemical reaction.

CENTRIFUGAL ADVANCE: A mechanical method of advancing the spark timing by using flyweights in the distributor that react to centrifugal force generated by the distributor shaft rotation.

CHECK VALVE: Any one-way valve installed to permit the flow of air, fuel or vacuum in one direction only.

CHOKE: A device, usually a moveable valve, placed in the intake path of a carburetor to restrict the flow of air.

CIRCUIT: Any unbroken path through which an electrical current can flow. Also used to describe fuel flow in some instances.

CIRCUIT BREAKER: A switch which protects an electrical circuit from overload by opening the circuit when the current flow exceeds a predetermined level. Some circuit breakers must be reset manually, while most reset automatically.

COIL (IGNITION): A transformer in the ignition circuit which steps up the voltage provided to the spark plugs.

COMBINATION MANIFOLD: An assembly which includes both the intake and exhaust manifolds in one casting.

COMBINATION VALVE: A device used in some fuel systems that routes fuel vapors to a charcoal storage canister instead of venting them into the atmosphere. The valve relieves fuel tank pressure and allows fresh air into the tank as the fuel level drops to prevent a vapor lock situation.

COMPRESSION RATIO: The comparison of the total volume of the cylinder and combustion chamber with the piston at BDC and the piston at TDC.

CONDENSER: 1. An electrical device which acts to store an electrical charge, preventing voltage surges. 2. A radiator-like device in the air conditioning system in which refrigerant gas condenses into a liquid, giving off heat.

CONDUCTOR: Any material through which an electrical current can be transmitted easily.

CONTINUITY: Continuous or complete circuit. Can be checked with an ohmmeter.

COUNTERSHAFT: An intermediate shaft which is rotated by a mainshaft and transmits, in turn, that rotation to a working part.

CRANKCASE: The lower part of an engine in which the crankshaft and related parts operate.

CRANKSHAFT: The main driving shaft of an engine which receives reciprocating motion from the pistons and converts it to rotary motion.

CYLINDER: In an engine, the round hole in the engine block in which the piston(s) ride.

CYLINDER BLOCK: The main structural member of an engine in which is found the cylinders, crankshaft and other principal parts.

CYLINDER HEAD: The detachable portion of the engine, usually fastened to the top of the cylinder block and containing all or most of the combustion chambers. On overhead valve engines, it contains the valves and their operating parts. On overhead cam engines, it contains the camshaft as well.

DEAD CENTER: The extreme top or bottom of the piston stroke.

DETONATION: An unwanted explosion of the air/fuel mixture in the combustion chamber caused by excess heat and compression, advanced timing, or an overly lean mixture. Also referred to as "ping".

DIAPHRAGM: A thin, flexible wall separating two cavities, such as in a vacuum advance unit.

DIESELING: A condition in which hot spots in the combustion chamber cause the engine to run on after the key is turned off.

DIFFERENTIAL: A geared assembly which allows the transmission of motion between drive axles, giving one axle the ability to turn faster than the other.

DIODE: An electrical device that will allow current to flow in one direction only.

DISC BRAKE: A hydraulic braking assembly consisting of a brake disc, or rotor, mounted on an axle, and a caliper assembly containing, usually two brake pads which are activated by hydraulic pressure. The pads are forced against the sides of the disc, creating friction which slows the vehicle.

DISTRIBUTOR: A mechanically driven device on an engine which is responsible for electrically firing the spark plug at a predetermined point of the piston stroke.

DOWEL PIN: A pin, inserted in mating holes in two different parts allowing those parts to maintain a fixed relationship.

DRUM BRAKE: A braking system which consists of two brake shoes and one or two wheel cylinders, mounted on a fixed backing plate, and a brake drum, mounted on an axle, which revolves around the assembly.

DWELL: The rate, measured in degrees of shaft rotation, at which an electrical circuit cycles on and off.

ELECTRONIC CONTROL UNIT (ECU): Ignition module, module, amplifier or igniter. See Module for definition.

ELECTRONIC IGNITION: A system in which the timing and firing of the spark plugs is controlled by an electronic control unit, usually called a module. These systems have no points or condenser.

END-PLAY: The measured amount of axial movement in a shaft.

ENGINE: A device that converts heat into mechanical energy.

EXHAUST MANIFOLD: A set of cast passages or pipes which conduct exhaust gases from the engine.

FEELER GAUGE: A blade, usually metal, or precisely predetermined thickness, used to measure the clearance between two parts.

FIRING ORDER: The order in which combustion occurs in the cylinders of an engine. Also the order in which spark is distributed to the plugs by the distributor.

FLOODING: The presence of too much fuel in the intake manifold and combustion chamber which prevents the air/fuel mixture from firing, thereby causing a no-start situation.

FLYWHEEL: A disc shaped part bolted to the rear end of the crankshaft. Around the outer perimeter is affixed the ring gear. The starter drive engages the ring gear, turning the flywheel, which rotates the crankshaft, imparting the initial starting motion to the engine.

FOOT POUND (ft. lbs. or sometimes, ft.lb.): The amount of energy or work needed to raise an item weighing one pound, a distance of one foot.

FUSE: A protective device in a circuit which prevents circuit overload by breaking the circuit when a specific amperage is present. The device is constructed around a strip or wire of a lower amperage rating than the circuit it is designed to protect. When an amperage higher than that stamped on the fuse is present in the circuit, the strip or wire melts, opening the circuit.

GEAR RATIO: The ratio between the number of teeth on meshing gears.

GENERATOR: A device which converts mechanical energy into electrical energy.

HEAT RANGE: The measure of a spark plug's ability to dissipate heat from its firing end. The higher the heat range, the hotter the plug fires.

HUB: The center part of a wheel or gear.

HYDROCARBON (HC): Any chemical compound made up of hydrogen and carbon. A major pollutant formed by the engine as a byproduct of combustion.

HYDROMETER: An instrument used to measure the specific gravity of a solution.

INCH POUND (inch lbs.; sometimes in.lb. or in. lbs.): One twelfth of a foot pound.

INDUCTION: A means of transferring electrical energy in the form of a magnetic field. Principle used in the ignition coil to increase voltage.

INJECTOR: A device which receives metered fuel under relatively low pressure and is activated to inject the fuel into the engine under relatively high pressure at a predetermined time.

INPUT SHAFT: The shaft to which torque is applied, usually carrying the driving gear or gears.

INTAKE MANIFOLD: A casting of passages or pipes used to conduct air or a fuel/air mixture to the cylinders.

JOURNAL: The bearing surface within which a shaft operates.

KEY: A small block usually fitted in a notch between a shaft and a hub to prevent slippage of the two parts.

MANIFOLD: A casting of passages or set of pipes which connect the cylinders to an inlet or outlet source.

MANIFOLD VACUUM: Low pressure in an engine intake manifold formed just below the throttle plates. Manifold vacuum is highest at idle and drops under acceleration.

MASTER CYLINDER: The primary fluid pressurizing device in a hydraulic system. In automotive use, it is found in brake and hydraulic clutch systems and is pedal activated, either directly or, in a power brake system, through the power booster.

MODULE: Electronic control unit, amplifier or igniter of solid state or integrated design which controls the current flow in the ignition primary circuit based on input from the pick-up coil. When the module opens the primary circuit, high secondary voltage is induced in the coil.

NEEDLE BEARING: A bearing which consists of a number (usually a large number) of long, thin rollers.

OHM: (Ω) The unit used to measure the resistance of conductor-to-electrical flow. One ohm is the amount of resistance that limits current flow to one ampere in a circuit with one volt of pressure.

OHMMETER: An instrument used for measuring the resistance, in ohms, in an electrical circuit.

OUTPUT SHAFT: The shaft which transmits torque from a device, such as a transmission.

OVERDRIVE: A gear assembly which produces more shaft revolutions than that transmitted to it.

OVERHEAD CAMSHAFT (OHC): An engine configuration in which the camshaft is mounted on top of the cylinder head and operates the valve either directly or by means of rocker arms.

OVERHEAD VALVE (OHV): An engine configuration in which all of the valves are located in the cylinder head and the camshaft is located in the cylinder block. The camshaft operates the valves via lifters and pushrods.

OXIDES OF NITROGEN (NOx): Chemical compounds of nitrogen produced as a byproduct of combustion. They combine with hydrocarbons to produce smog.

OXYGEN SENSOR: Use with the feedback system to sense the presence of oxygen in the exhaust gas and signal the computer which can reference the voltage signal to an air/fuel ratio.

PINION: The smaller of two meshing gears.

PISTON RING: An open-ended ring with fits into a groove on the outer diameter of the piston. Its chief function is to form a seal between the piston and cylinder wall. Most automotive pistons have three rings: two for compression sealing; one for oil sealing.

PRELOAD: A predetermined load placed on a bearing during assembly or by adjustment.

PRIMARY CIRCUIT: the low voltage side of the ignition system which consists of the ignition switch, ballast resistor or resistance wire, bypass, coil, electronic control unit and pick-up coil as well as the connecting wires and harnesses.

PRESS FIT: The mating of two parts under pressure, due to the inner diameter of one being smaller than the outer diameter of the other, or vice versa; an interference fit.

RACE: The surface on the inner or outer ring of a bearing on which the balls, needles or rollers move.

REGULATOR: A device which maintains the amperage and/or voltage levels of a circuit at predetermined values.

RELAY: A switch which automatically opens and/or closes a circuit.

RESISTANCE: The opposition to the flow of current through a circuit or electrical device, and is measured in ohms. Resistance is equal to the voltage divided by the amperage.

RESISTOR: A device, usually made of wire, which offers a preset amount of resistance in an electrical circuit.

RING GEAR: The name given to a ring-shaped gear attached to a differential case, or affixed to a flywheel or as part of a planetary gear set.

ROLLER BEARING: A bearing made up of hardened inner and outer races between which hardened steel rollers move.

ROTOR: 1. The disc-shaped part of a disc brake assembly, upon which the brake pads bear; also called, brake disc. 2. The device mounted atop the distributor shaft, which passes current to the distributor cap tower contacts.

SECONDARY CIRCUIT: The high voltage side of the ignition system, usually above 20,000 volts. The secondary includes the ignition coil, coil wire, distributor cap and rotor, spark plug wires and spark plugs.

SENDING UNIT: A mechanical, electrical, hydraulic or electro-magnetic device which transmits information to a gauge.

SENSOR: Any device designed to measure engine operating conditions or ambient pressures and temperatures. Usually electronic in nature and designed to send a voltage signal to an on-board computer, some sensors may operate as a simple on/off switch or they may provide a variable voltage signal (like a potentiometer) as conditions or measured parameters change.

SHIM: Spacers of precise, predetermined thickness used between parts to establish a proper working relationship.

SLAVE CYLINDER: In automotive use, a device in the hydraulic clutch system which is activated by hydraulic force, disengaging the clutch.

SOLENOID: A coil used to produce a magnetic field, the effect of which is to produce work.

SPARK PLUG: A device screwed into the combustion chamber of a spark ignition engine. The basic construction is a conductive core inside of a ceramic insulator, mounted in an outer conductive base. An electrical charge from the spark plug wire travels along the conductive core and jumps a preset air gap to a grounding point or points at the end of the conductive base. The resultant spark ignites the fuel/air mixture in the combustion chamber.

SPLINES: Ridges machined or cast onto the outer diameter of a shaft or inner diameter of a bore to enable parts to mate without rotation.

TACHOMETER: A device used to measure the rotary speed of an engine, shaft, gear, etc., usually in rotations per minute.

THERMOSTAT: A valve, located in the cooling system of an engine, which is closed when cold and opens gradually in response to engine heating, controlling the temperature of the coolant and rate of coolant flow.

TOP DEAD CENTER (TDC): The point at which the piston reaches the top of its travel on the compression stroke.

TORQUE: The twisting force applied to an object.

TORQUE CONVERTER: A turbine used to transmit power from a driving member to a driven member via hydraulic action, providing changes in drive ratio and torque. In automotive use, it links the driveplate at the rear of the engine to the automatic transmission.

TRANSDUCER: A device used to change a force into an electrical signal.

TRANSISTOR: A semi-conductor component which can be actuated by a small voltage to perform an electrical switching function.

TUNE-UP: A regular maintenance function, usually associated with the replacement and adjustment of parts and components in the electrical and fuel systems of a vehicle for the purpose of attaining optimum performance.

TURBOCHARGER: An exhaust driven pump which compresses intake air and forces it into the combustion chambers at higher than atmospheric pressures. The increased air pressure allows more fuel to be burned and results in increased horsepower being produced.

VACUUM ADVANCE: A device which advances the ignition timing in response to increased engine vacuum.

VACUUM GAUGE: An instrument used to measure the presence of vacuum in a chamber.

VALVE: A device which control the pressure, direction of flow or rate of flow of a liquid or gas.

VALVE CLEARANCE: The measured gap between the end of the valve stem and the rocker arm, cam lobe or follower that activates the valve.

VISCOSITY: The rating of a liquid's internal resistance to flow.

VOLTMETER: An instrument used for measuring electrical force in units called volts. Voltmeters are always connected parallel with the circuit being tested.

WHEEL CYLINDER: Found in the automotive drum brake assembly, it is a device, actuated by hydraulic pressure, which, through internal pistons, pushes the brake shoes outward against the drums.

MASTER INDEX

ABS BLEEDING 9-21
ADJUSTMENTS (AUTOMATIC TRANSMISSION) 7-8
FRONT BAND 7-9
REAR BAND 7-9
SHIFT LINKAGE 7-8
THROTTLE LINKAGE 7-10
THROTTLE VALVE CABLE (KICKDOWN) 7-10
ADJUSTMENTS (BRAKE OPERATING SYSTEM) 9-3
BRAKE PEDAL FREE-PLAY 9-3
DRUM BRAKES 9-3
AIR CLEANER 1-9
REMOVAL & INSTALLATION 1-9
AIR CONDITIONING COMPRESSOR 6-8
ISOLATING THE COMPRESSOR 6-9
REMOVAL & INSTALLATION 6-9
AIR CONDITIONING SYSTEM 1-18
PREVENTIVE MAINTENANCE 1-18
SYSTEM INSPECTION 1-19
SYSTEM SERVICE & REPAIR 1-18
ALTERNATOR 3-6
ALTERNATOR PRECAUTIONS 3-6
BELT TENSION ADJUSTMENT 3-7
REMOVAL & INSTALLATION 3-6
AMERICAN MOTORS SOLID STATE (RENIX) IGNITION SYSTEM 2-5
DIAGNOSIS & TESTING 2-5
ANTENNA 10-7
REMOVAL & INSTALLATION 10-7
ANTI-LOCK BRAKE SYSTEM 9-17
AUTOMATIC TRANSMISSION 7-8
AUTOMATIC TRANSMISSION (FLUIDS AND LUBRICANTS) 1-23
DRAIN, FILTER SERVICE AND REFILL 1-24
FLUID LEVEL CHECK 1-23
AVOIDING THE MOST COMMON MISTAKES 1-2
AVOIDING TROUBLE 1-2
AXLE SHAFT, BEARING AND SEAL (FRONT DRIVE AXLE) 7-14
REMOVAL & INSTALLATION 7-14
AXLE SHAFT, BEARING AND SEAL (REAR AXLE) 7-19
REMOVAL & INSTALLATION 7-19
B+ LATCH SYSTEM POWER RELAY 5-10
BACK-UP LIGHT SWITCH 7-2
REMOVAL & INSTALLATION 7-2
BASIC ELECTRICAL THEORY 6-2
HOW DOES ELECTRICITY WORK: THE WATER ANALOGY 6-2
OHM'S LAW 6-2
BASIC OPERATING PRINCIPLES 9-2
DISC BRAKES 9-2
DRUM BRAKES 9-2
BATTERY 1-12
BATTERY FLUID 1-13
CABLES 1-13
CHARGING 1-14
GENERAL MAINTENANCE 1-12
PRECAUTIONS 1-12
REPLACEMENT 1-14
BELTS 1-14
ADJUSTING 1-15
BLEEDING BRAKE SYSTEM 9-6
BLOWER MOTOR 6-7
REMOVAL & INSTALLATION 6-7
BODY LUBRICATION AND MAINTENANCE 1-29
BODY DRAIN HOLES 1-30
DOOR HINGES AND HINGE CHECKS 1-30
LOCK CYLINDERS 1-29
TAILGATE OR LIFTGATE 1-30
BOLTS, NUTS AND OTHER THREADED RETAINERS 1-5
BRAKE CALIPER 9-8
OVERHAUL 9-10
REMOVAL & INSTALLATION 9-8
BRAKE DISC (ROTOR) 9-11
INSPECTION AND MEASUREMENT 9-11
REMOVAL & INSTALLATION 9-11

BRAKE DRUMS 9-12
INSPECTION 9-12
REMOVAL & INSTALLATION 9-12
BRAKE HOSES AND LINES 9-5
INSPECTION 9-5
REMOVAL & INSTALLATION 9-6
BRAKE LIGHT SWITCH 9-3
ADJUSTMENT 9-3
REPLACEMENT 9-3
BRAKE MASTER CYLINDER 1-28
FLUID LEVEL CHECK 1-28
BRAKE OPERATING SYSTEM 9-2
BRAKE PADS 9-6
REMOVAL & INSTALLATION 9-6
BRAKE SHOES 9-12
REMOVAL & INSTALLATION 9-12
BRAKE SPECIFICATIONS 9-21
CABLES 9-15
ADJUSTMENT 9-16
REMOVAL & INSTALLATION 9-15
CAMSHAFT AND BEARINGS 3-36
BEARING REPLACEMENT 3-37
INSPECTION 3-37
REMOVAL & INSTALLATION 3-36
CAMSHAFT AND CONNECTING ROD SPECIFICATIONS 3-9
CAMSHAFT SPECIFICATIONS 3-9
CAPACITIES 1-32
CARBURETED FUEL SYSTEM 5-2
CARBURETOR 5-2
ADJUSTMENTS 5-4
OVERHAUL 5-2
REMOVAL & INSTALLATION 5-2
CATALYTIC CONVERTER (EXHAUST EMISSION CONTROLS) 4-5
CATALYTIC CONVERTER (EXHAUST SYSTEM) 3-45
REMOVAL & INSTALLATION 3-45
CENTER HIGH-MOUNTED STOP LAMP 6-17
REMOVAL & INSTALLATION 6-17
CENTER LINK/CONNECTING ROD/DRAG LINK 8-14
CHASSIS GREASING 1-29
AUTOMATIC TRANSMISSION LINKAGE 1-29
PARKING BRAKE LINKAGE 1-29
STEERING LINKAGE 1-29
CIRCUIT PROTECTION 6-19
CLOSED THROTTLE (IDLE) SWITCH 5-11
TESTING 5-11
CLUTCH 7-4
CLUTCH HYDRAULIC SYSTEM 7-8
BLEEDING THE SYSTEM 7-8
CLUTCH MASTER CYLINDER (CLUTCH) 7-6
OVERHAUL 7-6
REMOVAL & INSTALLATION 7-6
CLUTCH MASTER CYLINDER (FLUIDS AND LUBRICANTS) 1-28
FLUID LEVEL CHECK 1-28
COMBINATION/PROPORTIONING VALVE 9-5
REMOVAL & INSTALLATION 9-5
COMBINATION VALVE 9-20
REMOVAL & INSTALLATION 9-20
COMMAND-TRAC® SHIFT MOTOR AND HOUSING 7-17
FUNCTIONAL TEST 7-17
REMOVAL & INSTALLATION 7-17
COMPONENTS AND OPERATION 5-5
COMPUTERIZED EMISSION CONTROL (CEC) FEEDBACK SYSTEM 4-6
CONTROL PANEL 6-9
REMOVAL & INSTALLATION 6-9
CONTROL SWITCH 6-15
REMOVAL & INSTALLATION 6-15
CONVERSION FACTORS 1-7
COOLANT TEMPERATURE SENSOR (CTS) (MULTI-POINT FUEL INJECTION SYSTEM) 5-13
REMOVAL & INSTALLATION 5-13
COOLANT TEMPERATURE SENSOR (CTS) (THROTTLE BODY INJECTION FUEL SYSTEM) 5-10
REMOVAL & INSTALLATION 5-10
TESTING 5-10
COOLING 1-31
ENGINE 1-31
COOLING SYSTEM 1-26
DRAIN, FLUSH AND REFILL 1-27
FLUID LEVEL CHECK 1-26
RADIATOR CAP INSPECTION 1-28
CRANKCASE VENT FILTER 1-12
CRANKCASE VENTILATION (CCV) SYSTEM (EXHAUST EMISSION CONTROLS) 4-2
CRANKCASE VENTILATION (CCV) SYSTEM (ROUTINE MAINTENANCE) 1-12
CRANKSHAFT 3-42
INSPECTION 3-43
INSTALLATION 3-43
REMOVAL 3-42
CRANKSHAFT PULLEY (VIBRATION DAMPER) 3-32
REMOVAL & INSTALLATION 3-32
CRUISE CONTROL 6-14
CRUISE CONTROL REGULATOR 6-14
REPLACEMENT 6-14
CYLINDER HEAD 3-23
REMOVAL & INSTALLATION 3-23
DESCRIPTION AND OPERATION (ANTI-LOCK BRAKE SYSTEM) 9-17
DETERMINING AXLE RATIO 7-18
DIAGNOSTIC PROCEDURES 9-17
DISTRIBUTOR 3-3
REMOVAL & INSTALLATION 3-3
DO'S 1-4
DON'TS 1-5
DOOR GLASS 10-14
REMOVAL & INSTALLATION 10-14
DOOR LATCH 10-13
REMOVAL & INSTALLATION 10-13
DOOR TRIM PANEL 10-12
REMOVAL & INSTALLATION 10-12
DOORS 10-2
DOOR HINGE ADJUSTMENT 10-2
REMOVAL & INSTALLATION 10-2
DRIVE AXLE 1-25
DRIVELINE 7-12
EGR/CANISTER PURGE SOLENOID 5-11
ELECTRICAL COMPONENTS 6-2
CONNECTORS 6-4
GROUND 6-3
LOAD 6-3
POWER SOURCE 6-2
PROTECTIVE DEVICES 6-3
SWITCHES & RELAYS 6-3
WIRING & HARNESSES 6-3
ELECTRONIC CONTROL UNIT (ECU) (ANTI-LOCK BRAKE SYSTEM) 9-19
REMOVAL & INSTALLATION 9-19
ELECTRONIC CONTROL UNIT (ECU) (THROTTLE BODY INJECTION FUEL SYSTEM) 5-10
ELECTRONIC IGNITION 2-4
EMISSIONS MAINTENANCE REMINDER LIGHT 4-3
ENGINE (ENGINE MECHANICAL) 3-12
REMOVAL & INSTALLATION 3-12
ENGINE (FLUIDS AND LUBRICANTS) 1-22
OIL AND FILTER CHANGE 1-22
OIL LEVEL CHECK 1-22

ENGINE (SERIAL NUMBER IDENTIFICATION) 1-8
2.5L ENGINE 1-8
4.0L AND 4.2L ENGINES 1-8
ENGINE CONTROLLER 5-14
REMOVAL & INSTALLATION 5-14
ENGINE ELECTRICAL 3-2
ENGINE IDENTIFICATION 1-9
ENGINE MECHANICAL 3-8
ENGINE MECHANICAL SPECIFICATIONS 3-46
ENGINE OVERHAUL TIPS 3-11
CHECKING ENGINE COMPRESSION 3-12
INSPECTION TECHNIQUES 3-11
OVERHAUL TIPS 3-11
REPAIRING DAMAGED THREADS 3-11
TOOLS 3-11
ENGINE PERFORMANCE 2-9
ENGINE SPEED SENSOR (CRANKSHAFT POSITION SENSOR) 5-11
EVAPORATIVE CANISTER (EXHAUST EMISSION CONTROLS) 4-6
EVAPORATIVE CANISTER (ROUTINE MAINTENANCE) 1-12
EXHAUST EMISSION CONTROLS 4-2
EXHAUST GAS RECIRCULATION (EGR) SYSTEM 4-4
FUNCTIONAL TESTING 4-4
EXHAUST MANIFOLD 3-20
REMOVAL & INSTALLATION 3-20
EXHAUST SYSTEM 3-44
EXTERIOR 10-2
EXTERNAL SPARE TIRE CARRIER 10-11
REMOVAL & INSTALLATION 10-11
FASTENERS, MEASUREMENTS AND CONVERSIONS 1-5
FENDERS 10-7
REMOVAL & INSTALLATION 10-7
FIRING ORDERS 2-4
FLAT TOWING 1-31
FLATBED 1-31
ON-GROUND 1-31
FLOOR CONSOLE 10-11
REMOVAL & INSTALLATION 10-11
FLUID DISPOSAL 1-21
FLUID LEVEL CHECK 1-25
DRAIN AND REFILL 1-26
FLUIDS AND LUBRICANTS 1-21
FLYWHEEL/FLEX PLATE AND RING GEAR 3-44
REMOVAL & INSTALLATION 3-44
FOG LIGHTS 6-17
AIMING 6-17
4.2L ENGINE (IDLE ADJUSTMENTS) 2-7
FRESH AIR DOOR VACUUM MOTOR 6-10
REMOVAL & INSTALLATION 6-10
FRONT AXLE UNIT 7-17
REMOVAL & INSTALLATION 7-17
FRONT BUMPER 10-4
REMOVAL & INSTALLATION 10-4
FRONT DISC BRAKES 9-6
FRONT DRIVE AXLE 7-14
FRONT DRIVESHAFT AND U-JOINTS 7-12
REMOVAL & INSTALLATION 7-12
FRONT EXHAUST PIPE (HEAD PIPE) 3-45
REMOVAL & INSTALLATION 3-45
FRONT FASCIA AND SKID PLATE 10-5
REMOVAL & INSTALLATION 10-5
FRONT FENDER EXTENSION PANEL 10-8
REMOVAL & INSTALLATION 10-8
FRONT HUB AND WHEEL BEARINGS (FLUIDS AND LUBICANTS) 1-30
REMOVAL, PACKING AND INSTALLATION 1-30
FRONT HUB AND WHEEL BEARINGS (FRONT DRIVE AXLE) 7-18
ADJUSTMENT 7-18
FRONT SUSPENSION 8-2
FRONT WHEEL SENSOR 9-18
REMOVAL & INSTALLATION 9-18
FUEL AND OIL RECOMMENDATIONS 1-21
ENGINE OIL 1-22
FUEL 1-21
FUEL BODY ASSEMBLY 5-7
REMOVAL & INSTALLATION 5-7
FUEL FILTER 1-10
REMOVAL & INSTALLATION 1-10
FUEL INJECTOR (MULTI-POINT FUEL INJECTION SYSTEM) 5-13
REMOVAL AND INSTALLATION 5-13
FUEL INJECTOR (THROTTLE BODY INJECTION FUEL SYSTEM) 5-8
REMOVAL & INSTALLATION 5-8
FUEL PRESSURE REGULATOR 5-8
REMOVAL & INSTALLATION 5-8
FUEL PUMP (CARBURETED FUEL SYSTEM) 5-2
REMOVAL & INSTALLATION 5-2
TESTING 5-2
FUEL PUMP (THROTTLE BODY INJECTION FUEL SYSTEM) 5-6
REMOVAL & INSTALLATION 5-6
TESTING 5-6
FUEL TANK 5-14
FUSES AND CIRCUIT BREAKERS 6-19
FUSIBLE LINKS 6-20
REPLACEMENT 6-20
GASOLINE ENGINE TUNE-UP SPECIFICATIONS 2-8
GAUGE CLUSTER 6-13
REMOVAL & INSTALLATION 6-13
GENERAL ENGINE SPECIFICATIONS 3-8
GENERAL INFORMATION (COMPUTERIZED EMISSION CONTROL FEEDBACK SYSTEM) 4-6
CEC SYSTEM OPERATION 4-9
COMPONENTS 4-7
GENERAL INFORMATION (MULTI-POINT FUEL INJECTION SYSTEM) 4-38
GENERAL INFORMATION (REAR AXLE) 7-18
GENERAL INFORMATION (THROTTLE BODY FUEL INJECTION) 4-23
GENERAL RECOMMENDATIONS (TRAILER TOWING) 1-30
GRILLE AND GRILLE PANEL 10-6
REMOVAL & INSTALLATION 10-6
HARDTOP 10-10
REMOVAL & INSTALLATION 10-10
HEADLIGHT SWITCH 6-13
REMOVAL & INSTALLATION 6-13
HEADLIGHTS 6-16
AIMING 6-16
REMOVAL & INSTALLATION 6-16
HEADLINER 10-13
REMOVAL & INSTALLATION 10-13
HEATER CONTROL VALVE 6-9
REMOVAL & INSTALLATION 6-9
HEATER CORE 6-8
REMOVAL & INSTALLATION 6-8
HEATER HOUSING ASSEMBLY 6-7
REMOVAL & INSTALLATION 6-7
HEATING AND AIR CONDITIONING 6-7
HITCH (TONGUE) WEIGHT 1-30
HOOD 10-3
ALIGNMENT 10-3
REMOVAL & INSTALLATION 10-3
HOSES 1-17
REMOVAL & INSTALLATION 1-17
HOW TO USE THIS BOOK 1-2
HYDRAULIC CONCENTRIC BEARING (SLAVE CYLINDER) 7-7

OVERHAUL 7-8
REMOVAL & INSTALLATION 7-7
HYDRAULIC CONTROL UNIT (HCU) 9-19
REMOVAL & INSTALLATION 9-19
IDLE ADJUSTMENTS 2-7
IDLE SPEED ACTUATOR MOTOR 5-9
REMOVAL & INSTALLATION 5-9
IGNITION COIL 3-2
REMOVAL & INSTALLATION 3-2
IGNITION LOCK CYLINDER 8-10
REMOVAL AND INSTALLATION 8-10
IGNITION MODULE 3-2
REMOVAL & INSTALLATION 3-2
IGNITION SWITCH 8-10
REMOVAL & INSTALLATION 8-10
IGNITION TIMING 2-7
INSIDE REARVIEW MIRROR 10-15
REMOVAL & INSTALLATION 10-15
INSTRUMENT AND SWITCHES 6-11
INSTRUMENT CLUSTER 6-11
REMOVAL & INSTALLATION 6-11
INSTRUMENT PANEL 10-11
REMOVAL & INSTALLATION 10-11
INTAKE MANIFOLD 3-17
REMOVAL & INSTALLATION 3-17
INTERIOR 10-11
JACKING 1-32
LIFTGATE 10-4
REMOVAL & INSTALLATION 10-4
LIGHTING 6-16
LOWER BALL JOINT 8-5
REMOVAL AND INSTALLATION 8-5
MAINTENANCE OR REPAIR? 1-2
MANIFOLD ABSOLUTE PRESSURE (MAP) SENSOR (MULTI-POINT FUEL INJECTION SYSTEM) 5-14
REMOVAL & INSTALLATION 5-14
MANIFOLD ABSOLUTE PRESSURE (MAP) SENSOR (THROTTLE BODY INJECTION FUEL SYSTEM) 5-9
REMOVAL & INSTALLATION 5-9
TESTING 5-9
MANIFOLD AIR TEMPERATURE (MAT) SENSOR (MULTI-POINT FUEL INJECTION SYSTEM) 5-13
REMOVAL & INSTALLATION 5-13
MANIFOLD AIR TEMPERATURE (MAT) SENSOR (THROTTLE BODY INJECTION FUEL SYSTEM) 5-10
REMOVAL & INSTALLATION 5-10
TESTING 5-10
MANUAL STEERING GEAR (FLUIDS AND LUBRICANTS) 1-29
FLUID LEVEL CHECK 1-29
MANUAL STEERING GEAR (STEERING) 8-11
ADJUSTMENT 8-11
REMOVAL AND INSTALLATION 8-11
MANUAL TRANSMISSION 7-2
MANUAL TRANSMISSION (FLUIDS AND LUBRICANTS) 1-23
DRAIN AND REFILL 1-23
FLUID LEVEL CHECK 1-23
MASTER CYLINDER (ANTI-LOCK BRAKE SYSTEM) 9-20
REMOVAL & INSTALLATION 9-20
MASTER CYLINDER (BRAKE OPERATING SYSTEM) 9-3
OVERHAUL 9-3
REMOVAL & INSTALLATION 9-3
MUFFLER 3-44
REMOVAL & INSTALLATION 3-44
MULTI-POINT FUEL INJECTION (MFI) SYSTEM (FUEL SYSTEM) 5-11
MULTI-POINT FUEL INJECTION (MFI) SYSTEM (GENERAL INFORMATION AND MAINTENANCE) 4-38
NEUTRAL SAFETY/BACK-UP LIGHT SWITCH 7-10
REMOVAL & INSTALLATION 7-10
NON-THERMOSTATIC AIR CLEANER ASSEMBLY 4-3
OIL PAN 3-29
REMOVAL & INSTALLATION 3-29
OIL PUMP 3-31
REMOVAL & INSTALLATION 3-31
OUTSIDE MIRRORS 10-6
REMOVAL & INSTALLATION 10-6
OXYGEN SENSOR 4-3
REMOVAL & INSTALLATION 4-3
OXYGEN SENSOR HEATING ELEMENT 5-11
TESTING 5-11
PARKING BRAKE 9-15
PCV VALVE 1-11
OPERATION 1-11
SERVICING 1-12
PINION OIL SEAL 7-19
REMOVAL & INSTALLATION 7-19
PINION SEAL AND YOKE 7-15
REMOVAL & INSTALLATION 7-15
PISTON AND RING SPECIFICATIONS 3-10
PISTONS AND CONNECTING RODS 3-38
CHECKING CYLINDER BORE 3-39
CYLINDER HONING 3-39
INSPECTION 3-38
PISTON ASSEMBLY & INSTALLATION 3-41
PISTON PIN REMOVAL & INSTALLATION 3-38
REMOVAL 3-38
RING INSTALLATION 3-40
RING TOLERANCES 3-40
PITMAN ARM 8-15
REMOVAL AND INSTALLATION 8-15
POSITIVE CRANKCASE VENTILATION (PCV) SYSTEM 4-2
POWER BRAKE BOOSTER (ANTI-LOCK BRAKE SYSTEM) 9-20
REMOVAL & INSTALLATION 9-20
POWER BRAKE BOOSTER (BRAKE OPERATING SYSTEM) 9-5
REMOVAL & INSTALLATION 9-5
POWER DISTRIBUTION CENTER 6-19
POWER STEERING GEAR 8-12
ADJUSTMENT 8-12
REMOVAL AND INSTALLATION 8-12
POWER STEERING PUMP (FLUIDS AND LUBRICANTS) 1-28
FLUID LEVEL CHECK 1-28
POWER STEERING PUMP (STEERING) 8-13
POWER STEERING PUMP (SUSPENSION AND STEERING) 8-16
REMOVAL AND INSTALLATION 8-13
POWERTRAIN CONTROL MODULE (PCM) SYSTEM 2-6
DIAGNOSIS 2-6
PRESSURE PLATE AND DRIVEN DISC 7-4
REMOVAL & INSTALLATION 7-4
PRESSURE RELIEF/ROLLOVER VALVE 4-6
REMOVAL & INSTALLATION 4-6
PRESSURE SENSING SWITCH 5-10
PRESSURE/VACUUM FUEL TANK FILLER CAP 4-6
PREVENTIVE MAINTENANCE 1-32
PULSE AIR SYSTEM 4-4
COMPONENTS 4-4
QUARTER GLASS WINDOW 10-15
REMOVAL & INSTALLATION 10-15
QUICK CONNECT FITTINGS (MULTI-POINT FUEL INJECTION SYSTEM) 5-12
QUICK CONNECT FITTINGS (THROTTLE BODY INJECTION FUEL SYSTEM) 5-6
RADIATOR 3-20
REMOVAL & INSTALLATION 3-20
RADIO 6-14

RADIO (RADIO) 6-14
REMOVAL & INSTALLATION 6-14
REAR AXLE 7-18
REAR AXLE UNIT 7-22
REMOVAL & INSTALLATION 7-22
REAR BUMPER 10-4
REMOVAL & INSTALLATION 10-4
REAR DRIVESHAFT AND U-JOINTS 7-12
REMOVAL & INSTALLATION 7-12
U-JOINT REPLACEMENT 7-13
REAR DRUM BRAKES 9-12
REAR EXHAUST PIPE OR TAILPIPE 3-45
REMOVAL & INSTALLATION 3-45
REAR FASCIA AND SKID PLATE 10-5
REMOVAL & INSTALLATION 10-5
REAR MAIN OIL SEAL 3-41
REPLACEMENT 3-41
REAR SUSPENSION 8-6
REAR WHEEL SENSOR 9-18
REMOVAL & INSTALLATION 9-18
REGULATOR 3-7
RELEASING FUEL SYSTEM PRESSURE 5-12
ROCKER ARM (VALVE) COVER 3-14
REMOVAL & INSTALLATION 3-14
ROCKER ARMS AND PUSHRODS 3-16
REMOVAL & INSTALLATION 3-16
ROUTINE MAINTENANCE 1-9
SEAT AND SHOULDER BELTS 10-16
REMOVAL & INSTALLATION 10-16
SEATS 10-16
REMOVAL & INSTALLATION 10-16
SERIAL NUMBER IDENTIFICATION 1-8
SERVICING YOUR VEHICLE SAFELY 1-4
SERVO 6-15
REMOVAL & INSTALLATION 6-15
SERVO CABLE 6-16
REMOVAL & INSTALLATION 6-16
SHOCK ABSORBERS (FRONT SUSPENSION) 8-2
REMOVAL AND INSTALLATION 8-2
SHOCK ABSORBERS (REAR SUSPENSION) 8-7
REMOVAL AND INSTALLATION 8-7
SIGNAL, PARKING, BRAKE AND MARKER LIGHTS 6-17
REMOVAL & INSTALLATION 6-17
SINGLE BOARD ENGINE CONTROLLER (SBEC II) SYSTEM 2-6
DIAGNOSIS & TESTING 2-6
SLING-TYPE TOWING 1-31
FRONT END 1-31
REAR END 1-31
SOFT TOP 10-9
REMOVAL & INSTALLATION 10-9
SOLID STATE IGNITION (SSI) SYSTEM 2-4
DIAGNOSIS & TESTING 2-5
SPARK PLUGS 2-2
CHECKING AND REPLACING SPARK PLUG CABLES 2-4
INSPECTION & GAPPING 2-2
INSTALLATION 2-4
REMOVAL 2-2
SPARK PLUG HEAT RANGE 2-2
SPECIAL TOOLS 1-4
SPECIFICATIONS CHARTS
BRAKE SPECIFICATIONS 9-21
CAMSHAFT AND CONNECTING ROD SPECIFICATIONS 3-9
CAMSHAFT SPECIFICATIONS 3-9
CAPACITIES 1-32
CONVERSION FACTORS 1-7
ENGINE IDENTIFICATION 1-9
ENGINE MECHANICAL SPECIFICATIONS 3-46
GASOLINE ENGINE TUNE-UP SPECIFICATIONS 2-8
GENERAL ENGINE SPECIFICATIONS 3-8
PISTON AND RING SPECIFICATIONS 3-10
PREVENTIVE MAINTENANCE 1-32
TORQUE SPECIFICATIONS (BRAKES) 9-22
TORQUE SPECIFICATIONS (DRIVE TRAIN) 7-23
TORQUE SPECIFICATIONS (ENGINE AND ENGINE OVERHAUL) 3-10
TORQUE SPECIFICATIONS (SUSPENSION AND STEERING) 8-15
TORQUE SPECIFICATIONS, ADDITIONAL (ENGINE AND ENGINE OVERHAUL) 3-60
VALVE SPECIFICATIONS 3-8
WHEEL ALIGNMENT 8-6
SPEED SENSOR 6-15
REMOVAL & INSTALLATION 6-15
SPEEDOMETER 6-12
REMOVAL & INSTALLATION 6-12
SPORT BAR 10-8
REMOVAL & INSTALLATION 10-8
SPRINGS (FRONT SUSPENSION) 8-2
REMOVAL AND INSTALLATION 8-2
SPRINGS (REAR SUSPENSION) 8-6
REMOVAL AND INSTALLATION 8-6
STABILIZER BAR 8-3
REMOVAL & INSTALLATION 8-3
STANDARD AND METRIC MEASUREMENTS 1-7
STARTER 3-7
REMOVAL & INSTALLATION 3-7
STEERING 8-8
STEERING DAMPER 8-15
REMOVAL AND INSTALLATION 8-15
STEERING KNUCKLE 8-3
REMOVAL AND INSTALLATION 8-3
STEERING WHEEL 8-8
REMOVAL AND INSTALLATION 8-8
TACHOMETER 6-13
REMOVAL & INSTALLATION 6-13
TAILGATE 10-3
REMOVAL & INSTALLATION 10-3
TAILGATE LATCH AND RELEASE HANDLE 10-13
REMOVAL & INSTALLATION 10-13
TANK ASSEMBLY 5-14
REMOVAL & INSTALLATION 5-14
TEST EQUIPMENT 6-4
JUMPER WIRES 6-4
MULTIMETERS 6-5
TEST LIGHTS 6-4
TESTING 6-6
OPEN CIRCUITS 6-6
RESISTANCE 6-6
SHORT CIRCUITS 6-6
VOLTAGE 6-6
VOLTAGE DROP 6-6
THERMOSTAT 3-16
REMOVAL & INSTALLATION 3-16
THERMOSTATIC AIR CLEANER (TAC) SYSTEM 4-2
THROTTLE BODY (MULTI-POINT FUEL INJECTION SYSTEM) 5-12
REMOVAL & INSTALLATION 5-12
THROTTLE BODY (SINGLE POINT) FUEL INJECTION 4-23
THROTTLE BODY (SINGLE POINT) INJECTION FUEL SYSTEM 5-5
THROTTLE BODY (THROTTLE BODY INJECTION FUEL SYSTEM) 5-7
REMOVAL & INSTALLATION 5-7
THROTTLE POSITION SENSOR (MULTI-POINT FUEL INJECTION SYSTEM) 5-13
REMOVAL & INSTALLATION 5-13
THROTTLE POSITION SENSOR (TPS) (THROTTLE BODY INJECTION FUEL SYSTEM) 5-8

ADJUSTMENT 5-8
REMOVAL & INSTALLATION 5-9
TIE ROD END 8-14
REMOVAL AND INSTALLATION 8-14
TIMING ADJUSTMENT 2-7
PROCEDURE 2-7
TIMING CHAIN AND TENSIONER 3-34
REMOVAL & INSTALLATION 3-34
TIMING GEAR COVER AND SEAL 3-32
REMOVAL & INSTALLATION 3-32
TIRES AND WHEELS 1-19
INFLATION & INSPECTION 1-20
TIRE DESIGN 1-20
TIRE ROTATION 1-19
TIRE STORAGE 1-20
TOOLS AND EQUIPMENT 1-2
TORQUE 1-6
TORQUE ANGLE METERS 1-7
TORQUE WRENCHES 1-6
TORQUE SPECIFICATIONS (BRAKES) 9-22
TORQUE SPECIFICATIONS (DRIVE TRAIN) 7-23
TORQUE SPECIFICATIONS (ENGINE AND ENGINE OVERHAUL) 3-10
TORQUE SPECIFICATIONS (SUSPENSION AND STEERING) 8-15
TORQUE SPECIFICATIONS, ADDITIONAL (ENGINE AND ENGINE OVERHAUL) 3-60
TOWING THE VEHICLE 1-31
TRACK BAR (FRONT SUSPENSION) 8-3
REMOVAL AND INSTALLATION 8-3
TRACK BAR (REAR SUSPENSION) 8-7
REMOVAL AND INSTALLATION 8-7
TRAILER TOWING 1-30
TRAILER WEIGHT 1-30
TRAILER WIRING 6-19
TRANSFER CASE 7-12
TRANSFER CASE (TRANSFER CASE) 7-12
REMOVAL & INSTALLATION 7-12
TRANSFER CASE (FLUIDS AND LUBRICANTS) 1-24
DRAIN AND REFILL 1-25
FLUID LEVEL CHECK 1-24
TRANSMISSION (AUTOMATIC TRANSMISSION) 7-10
REMOVAL & INSTALLATION 7-10
TRANSMISSION (MANUAL TRANSMISSION) 7-2
REMOVAL & INSTALLATION 7-2
TRANSMISSION (TRAILER TOWING) 1-31
TRANSMISSION OIL COOLER 3-21
TRANSMISSION/TRANSFER CASE/AXLE 1-8
TROUBLESHOOTING (COMPUTERIZED EMISSION CONTROL FEEDBACK SYSTEM) 4-10
DIAGNOSTIC TESTS 4-10
INITIALIZATION 4-10
PRELIMINARY TESTS 4-10
TROUBLESHOOTING (MULTI-POINT FUEL INJECTION SYSTEM) 4-38
COMPONENT TESTING 4-43
FAULT CODES 4-38
SYSTEM SELF-DIAGNOSTICS 4-43
TROUBLESHOOTING (THROTTLE BODY FUEL INJECTION) 4-23
DIAGNOSTIC TESTS 4-23
TROUBLESHOOTING CHARTS
ENGINE PERFORMANCE 2-9
POWER STEERING PUMP 8-16
TROUBLESHOOTING ELECTRICAL SYSTEMS 6-5
TUNE-UP PROCEDURES 2-2
TURN SIGNAL SWITCH 8-9
REMOVAL AND INSTALLATION 8-9
2.5L AND 4.0L ENGINES 2-8
UNDERSTANDING AND TROUBLESHOOTING ELECTRICAL SYSTEMS 6-2
UNDERSTANDING THE MANUAL TRANSMISSION 7-2
UPPER BALL JOINT 8-5
REMOVAL AND INSTALLATION 8-5
VACUUM DIAGRAMS 4-45
VALVE LASH 2-8
VALVE SEATS 3-29
REFACING 3-29
VALVE SPECIFICATIONS 3-8
VALVES AND SPRINGS 3-26
CLEANING AND INSPECTION 3-27
INSTALLATION 3-28
LAPPING 3-28
REFACING 3-28
REMOVAL 3-27
VALVE SPRING TESTING 3-28
VEHICLE 1-8
VEHICLE DISTANCE (SPEED) SENSOR 5-13
REMOVAL & INSTALLATION 5-13
VENT DOOR CONTROL CABLES 6-10
REMOVAL & INSTALLATION 6-10
WATER PUMP 3-21
REMOVAL & INSTALLATION 3-21
WHEEL ALIGNMENT (SUSPENSION AND STEERING) 8-6
WHEEL ALIGNMENT (FRONT SUSPENSION) 8-5
CAMBER 8-5
CASTER 8-5
TOE 8-5
WHEEL CYLINDERS 9-14
OVERHAUL 9-14
WHERE TO BEGIN 1-2
WIDE-OPEN THROTTLE (WOT) SWITCH 5-11
TESTING 5-11
WINDOW REGULATOR 10-15
REMOVAL & INSTALLATION 10-15
WINDSHIELD FRAME 10-14
REMOVAL & INSTALLATION 10-14
WINDSHIELD GLASS 10-14
REMOVAL & INSTALLATION 10-14
WINDSHIELD WIPERS 6-10
WINDSHIELD WIPERS (ROUTINE MAINTENANCE) 1-19
ELEMENT (REFILL) CARE & REPLACEMENT 1-19
WIPER BLADES AND ARMS 6-10
REMOVAL & INSTALLATION 6-10
WIPER MOTOR AND LINKAGE 6-10
REMOVAL & INSTALLATION 6-10
WIRE AND CONNECTOR REPAIR 6-7
WIRING DIAGRAMS 6-21

CHILTON'S

Total Car Care™

...For The Do-It-Yourselfer

Total Car Care is the most complete, step-by-step automotive repair manual you'll ever use. All repair procedures are supported by detailed specifications, exploded views, and photographs.

Here are just a few of the items in this manual that make your repair jobs easier:

- **Expanded index to quickly locate information**
- **Vacuum diagrams**
- **Wiring diagrams**
- **Diagnostic charts**
- **Troubleshooting charts**
- **A glossary to identify those unfamiliar terms**

From the simplest repair procedure to the most complex, trust Chilton's Total Car Care to give you everything you need to do the job.

Save time and money by doing it yourself, with the confidence only a Chilton Repair Manual can provide.

•General Information •Routine Maintenance & Tune-Up •Engine & Engine Overhaul •Driveability & Emission Controls •Trouble Codes & Diagnostics •Fuel System •Chassis Electrical •Drive Train •Suspension & Steering •Brakes •Body •Glossary

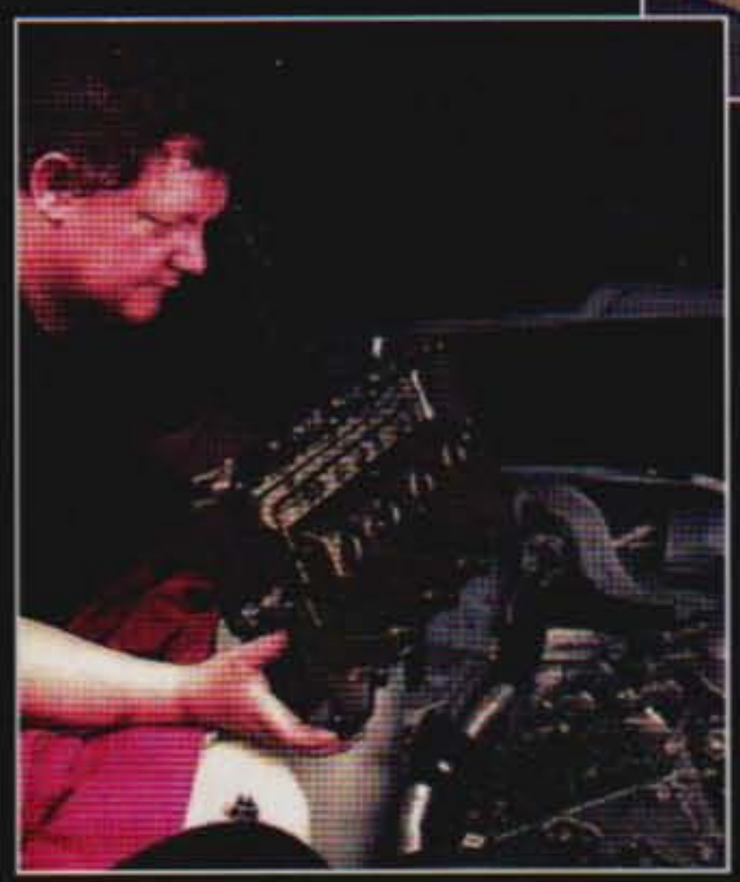

799-2873

UPC 0 35675 08535 9

ISBN 0-8019-9092-0

EAN 9 780801 990922 90000